AUTHENTICATED
U.S. GOVERNMENT
INFORMATION
GPO

FEDERAL REGISTER

Vol. 87 Tuesday

No. 7 January 11, 2022

Pages 1317–1656

OFFICE OF THE FEDERAL REGISTER

The **FEDERAL REGISTER** (ISSN 0097–6326) is published daily, Monday through Friday, except official holidays, by the Office of the Federal Register, National Archives and Records Administration, under the Federal Register Act (44 U.S.C. Ch. 15) and the regulations of the Administrative Committee of the Federal Register (1 CFR Ch. I). The Superintendent of Documents, U.S. Government Publishing Office, is the exclusive distributor of the official edition. Periodicals postage is paid at Washington, DC.

The **FEDERAL REGISTER** provides a uniform system for making available to the public regulations and legal notices issued by Federal agencies. These include Presidential proclamations and Executive Orders, Federal agency documents having general applicability and legal effect, documents required to be published by act of Congress, and other Federal agency documents of public interest.

Documents are on file for public inspection in the Office of the Federal Register the day before they are published, unless the issuing agency requests earlier filing. For a list of documents currently on file for public inspection, see *www.federalregister.gov.*

The seal of the National Archives and Records Administration authenticates the Federal Register as the official serial publication established under the Federal Register Act. Under 44 U.S.C. 1507, the contents of the **Federal Register** shall be judicially noticed.

The **Federal Register** is published in paper and on 24x microfiche. It is also available online at no charge at *www.govinfo.gov*, a service of the U.S. Government Publishing Office.

The online edition of the **Federal Register** is issued under the authority of the Administrative Committee of the Federal Register as the official legal equivalent of the paper and microfiche editions (44 U.S.C. 4101 and 1 CFR 5.10). It is updated by 6:00 a.m. each day the **Federal Register** is published and includes both text and graphics from Volume 1, 1 (March 14, 1936) forward. For more information, contact the GPO Customer Contact Center, U.S. Government Publishing Office. Phone 202-512-1800 or 866-512-1800 (toll free). E-mail, *gpocusthelp.com.*

The annual subscription price for the **Federal Register** paper edition is $860 plus postage, or $929, for a combined **Federal Register, Federal Register** Index and List of CFR Sections Affected (LSA) subscription; the microfiche edition of the **Federal Register** including the **Federal Register** Index and LSA is $330, plus postage. Six month subscriptions are available for one-half the annual rate. The prevailing postal rates will be applied to orders according to the delivery method requested. The price of a single copy of the daily **Federal Register,** including postage, is based on the number of pages: $11 for an issue containing less than 200 pages; $22 for an issue containing 200 to 400 pages; and $33 for an issue containing more than 400 pages. Single issues of the microfiche edition may be purchased for $3 per copy, including postage. Remit check or money order, made payable to the Superintendent of Documents, or charge to your GPO Deposit Account, VISA, MasterCard, American Express, or Discover. Mail to: U.S. Government Publishing Office—New Orders, P.O. Box 979050, St. Louis, MO 63197-9000; or call toll free 1-866-512-1800, DC area 202-512-1800; or go to the U.S. Government Online Bookstore site, see *bookstore.gpo.gov.*

There are no restrictions on the republication of material appearing in the **Federal Register.**

How To Cite This Publication: Use the volume number and the page number. Example: 87 FR 12345.

Postmaster: Send address changes to the Superintendent of Documents, Federal Register, U.S. Government Publishing Office, Washington, DC 20402, along with the entire mailing label from the last issue received.

SUBSCRIPTIONS AND COPIES

PUBLIC

Subscriptions:

Paper or fiche	**202–512–1800**
Assistance with public subscriptions	**202–512–1806**

General online information **202–512–1530; 1–888–293–6498**

Single copies/back copies:

Paper or fiche	**202–512–1800**
Assistance with public single copies	**1–866–512–1800 (Toll-Free)**

FEDERAL AGENCIES

Subscriptions:

Assistance with Federal agency subscriptions:

Email	*FRSubscriptions@nara.gov*
Phone	**202–741–6000**

The Federal Register Printing Savings Act of 2017 (Pub. L. 115-120) placed restrictions on distribution of official printed copies of the daily **Federal Register** to members of Congress and Federal offices. Under this Act, the Director of the Government Publishing Office may not provide printed copies of the daily **Federal Register** unless a Member or other Federal office requests a specific issue or a subscription to the print edition. For more information on how to subscribe use the following website link: *https://www.gpo.gov/frsubs.*

Printed on recycled paper.

Contents

Federal Register

Vol. 87, No. 7

Tuesday, January 11, 2022

Agriculture Department
NOTICES
Agency Information Collection Activities; Proposals, Submissions, and Approvals, 1392–1393
Performance Review Board Membership, 1392

American Battle Monuments Commission
NOTICES
Agency Information Collection Activities; Proposals, Submissions, and Approvals:
Qualitative Feedback on Agency Service Delivery, 1393–1394

Centers for Medicare & Medicaid Services
NOTICES
Agency Information Collection Activities; Proposals, Submissions, and Approvals, 1414–1416

Children and Families Administration
NOTICES
Agency Information Collection Activities; Proposals, Submissions, and Approvals:
Judicial, Court, and Attorney Measures of Performance, 1416–1417

Civil Rights Commission
NOTICES
Meetings:
New Mexico Advisory Committee, 1394

Coast Guard
RULES
Civil Monetary Penalty Inflation Adjustment, 1317–1330
Regulated Navigation Areas:
NW Natural PGM Site, Willamette River, Portland OR, 1354–1356
PROPOSED RULES
User Fees for Inspected Towing Vessels, 1378–1390
NOTICES
Agency Information Collection Activities; Proposals, Submissions, and Approvals, 1429–1431

Commerce Department
See Foreign-Trade Zones Board
See Industry and Security Bureau
See International Trade Administration
See National Oceanic and Atmospheric Administration

Court Services and Offender Supervision Agency for the District of Columbia
NOTICES
Privacy Act; System of Records, 1402–1409

Defense Department
NOTICES
Agency Information Collection Activities; Proposals, Submissions, and Approvals:
Certain Federal Acquisition Regulation Part 22 Labor Requirements, 1413–1414

Drug Enforcement Administration
NOTICES
Importer, Manufacturer or Bulk Manufacturer of Controlled Substances; Application, Registration, etc.:
Curia Missouri, Inc., 1434–1435
Johnson Matthey, Inc., 1435
Nexus Pharmaceuticals, Inc., 1435

Education Department
NOTICES
Submission of Data by State Educational Agencies:
Submission Dates for State Revenue and Expenditure Reports for Fiscal Year 2021, Revisions to Those Reports, and Revisions to Prior Fiscal Year Reports, 1409–1410

Employment and Training Administration
NOTICES
Agency Information Collection Activities; Proposals, Submissions, and Approvals:
Federal Pell Grants and the Payment of Unemployment Benefits to Individuals in Approved Training, 1438–1439
Meetings:
Advisory Committee on Apprenticeship, 1437–1438

Energy Department
See Federal Energy Regulatory Commission
PROPOSED RULES
Energy Conservation Program:
Test Procedure for Consumer Water Heaters and Residential-Duty Commercial Water Heaters, 1554–1614
NOTICES
Meetings:
Environmental Management Site-Specific Advisory Board, Oak Ridge, 1410–1411

Environmental Protection Agency
RULES
Air Quality State Implementation Plans; Approvals and Promulgations:
North Carolina; Mecklenburg General Provisions, 1356–1358
North Carolina; Minor Revisions to Cotton Ginning Operations Rule, 1358–1360
Pesticide Tolerance; Exemptions, Petitions, Revocations, etc.:
Acetic acid ethenyl ester, polymer with ethene, N-(hydroxymethyl)-2-propenamide, and 2-propenamide; (AM–E–NMA–VA), 1360–1363
Trifloxystrobin, 1363–1367
PROPOSED RULES
National Emission Standards for Hazardous Air Pollutants:
Primary Copper Smelting Residual Risk and Technology Review and Primary Copper Smelting Area Source Technology Review, 1616–1655

Farm Credit Administration
RULES
Rules of Practice and Procedure; Adjusting Civil Money Penalties for Inflation, 1331–1332

Federal Aviation Administration
RULES
Airworthiness Directives:
Airbus Defense and Space S.A. (Formerly Known as Construcciones Aeronauticas, S.A.) Airplanes, 1333–1335
Bombardier, Inc., Airplanes, 1346–1349, 1352–1354
General Electric Company Turbofan Engines, 1343–1346
Saab AB, Support and Services (Formerly Known as Saab AB, Saab Aeronautics) Airplanes, 1335–1338
The Boeing Company Airplanes, 1338–1340, 1349–1352
Vulcanair S.p.A. Airplanes, 1340–1343
NOTICES
Airport Property:
Kansas City International Airport, Kansas City, MO, 1474–1475
Saline County Regional Airport, Benton, AR, 1474

Federal Deposit Insurance Corporation
NOTICES
Civil Monetary Penalty Inflation Adjustment, 1411–1413

Federal Energy Regulatory Commission
RULES
Safety of Water Power Projects and Project Works, 1490–1520

Federal Maritime Commission
NOTICES
Filing of Complaint and Assignment:
CCMA, LLC, Complainant v. Safmarine, Inc. and Ports America Chesapeake, LLC, Respondents, 1413

Federal Motor Carrier Safety Administration
NOTICES
Qualification of Drivers; Exemption Applications:
Vision, 1475–1476

Federal Railroad Administration
NOTICES
Petition for Waiver of Compliance, 1476–1477

Financial Crimes Enforcement Network
NOTICES
Agency Information Collection Activities; Proposals, Submissions, and Approvals:
Renewal Without Change of Reports of Transactions with Foreign Financial Agencies, 1479–1484

Fish and Wildlife Service
PROPOSED RULES
Endangered and Threatened Species:
Removal of 23 Extinct Species from the Lists of Endangered and Threatened Wildlife and Plants; Ivory-billed Woodpecker, 1390–1391

Food and Drug Administration
NOTICES
Agency Information Collection Activities; Proposals, Submissions, and Approvals:
Drug Supply Chain Security Act Implementation, 1419–1421
Guidance:
Permanent Discontinuance or Interruption in Manufacturing of a Device under the Federal Food, Drug, and Cosmetic Act, 1417–1419

Foreign-Trade Zones Board
NOTICES
Authorization of Production Activity:
Lilly del Caribe, Inc. (Pharmaceutical Products), Foreign-Trade Zone 7, Carolina, Puerto Rico, 1394

General Services Administration
NOTICES
Agency Information Collection Activities; Proposals, Submissions, and Approvals:
Certain Federal Acquisition Regulation Part 22 Labor Requirements, 1413–1414

Health and Human Services Department
See Centers for Medicare & Medicaid Services
See Children and Families Administration
See Food and Drug Administration
See Health Resources and Services Administration
See Inspector General Office, Health and Human Services Department
See National Institutes of Health
NOTICES
Agency Information Collection Activities; Proposals, Submissions, and Approvals, 1422–1423

Health Resources and Services Administration
NOTICES
Agency Information Collection Activities; Proposals, Submissions, and Approvals:
Telehealth Resource Center Performance Measurement Tool, 1421–1422

Homeland Security Department
See Coast Guard
See Transportation Security Administration
See U.S. Customs and Border Protection
RULES
Civil Monetary Penalty Inflation Adjustment, 1317–1330
NOTICES
Meetings:
President's National Security Telecommunications Advisory Committee, 1432

Industry and Security Bureau
NOTICES
Meetings:
Sensors and Instrumentation Technical Advisory Committee, 1394–1395

Inspector General Office, Health and Human Services Department
RULES
Medicare and State Health Care Programs:
Fraud and Abuse; Procedures Regarding the Submission of Advisory Opinion Requests to, and the Issuance of Advisory Opinions by, Office of Inspector General, 1367–1369

Interior Department
See Fish and Wildlife Service
See National Park Service
See Surface Mining Reclamation and Enforcement Office

Internal Revenue Service
NOTICES
Agency Information Collection Activities; Proposals, Submissions, and Approvals, 1484–1486

International Trade Administration
NOTICES
Antidumping or Countervailing Duty Investigations, Orders, or Reviews:
Advance Notification of Sunset Review, 1400–1401
Certain Aluminum Foil from the People's Republic of China; Correction, 1395–1396
Certain Uncoated Paper from Brazil, 1395
Opportunity to Request Administrative Review and Join Annual Inquiry Service List, 1396–1400

International Trade Commission
NOTICES
Investigations; Determinations, Modifications, and Rulings, etc.:
Certain Vacuum Insulated Flasks and Components Thereof, 1433–1434

Justice Department
See Drug Enforcement Administration
NOTICES
Privacy Act; Systems of Records, 1436–1437

Labor Department
See Employment and Training Administration
NOTICES
Agency Information Collection Activities; Proposals, Submissions, and Approvals:
Statement of Recovery Forms, 1439

National Aeronautics and Space Administration
NOTICES
Agency Information Collection Activities; Proposals, Submissions, and Approvals:
Certain Federal Acquisition Regulation Part 22 Labor Requirements, 1413–1414
Requirement for Recipients of Financial Assistance Awards to Obtain a Quotation from Small and/or Minority Businesses, Women's Business Enterprises and Labor Surplus Area Firms, 1439–1440

National Institutes of Health
NOTICES
Meetings:
Center for Scientific Review, 1424–1425, 1428–1429
Eunice Kennedy Shriver National Institute of Child Health and Human Development, 1426–1427
National Cancer Institute, 1426
National Heart, Lung, and Blood Institute, 1424, 1427–1428
National Institute of Allergy and Infectious Diseases, 1427
National Institute of Arthritis and Musculoskeletal and Skin Diseases, 1424
National Institute of Environmental Health Sciences, 1425
National Institute of Mental Health, 1426
National Institute of Neurological Disorders and Stroke, 1427
National Institute on Alcohol Abuse and Alcoholism, 1428

National Oceanic and Atmospheric Administration
NOTICES
Magnuson-Stevens Fishery Conservation and Management Act:
General Provisions for Domestic Fisheries; Application for Exempted Fishing Permit, 1401–1402
Permits; Applications, Issuances, etc.:
Marine Mammals and Endangered Species, 1401

National Park Service
PROPOSED RULES
Mount Rainier National Park:
Fishing, 1374–1378
NOTICES
National Register of Historic Places:
Pending Nominations and Related Actions, 1432–1433

National Science Foundation
NOTICES
Agency Information Collection Activities; Proposals, Submissions, and Approvals:
Convergence Accelerator Evaluation and Monitoring Plan, 1440–1441

Nuclear Regulatory Commission
NOTICES
Oklo Power LLC, a subsidiary of Oklo Inc. Oklo Aurora Combined License Application Idaho National Laboratory, 1441–1444

Postal Regulatory Commission
NOTICES
Postal Service Performance Report and Performance Plan, 1444–1445

Railroad Retirement Board
NOTICES
Meetings; Sunshine Act, 1445

Securities and Exchange Commission
NOTICES
Agency Information Collection Activities; Proposals, Submissions, and Approvals, 1445–1446, 1460–1463, 1465–1466, 1469–1470
Application:
ETF Opportunities Trust and Applied Finance Advisors, LLC, 1456–1457
HPS Corporate Lending Fund, et al., 1446–1451
Self-Regulatory Organizations; Proposed Rule Changes:
ICE Clear Europe Ltd., 1457–1460
New York Stock Exchange LLC, 1463–1464
NYSE American LLC, 1453–1454, 1461–1462
NYSE Arca, Inc., 1451–1453, 1455–1456
NYSE Chicago, Inc., 1468–1469
NYSE National, Inc., 1466–1467

State Department
NOTICES
Culturally Significant Object Being Imported for Exhibition:
Meret Oppenheim: My Exhibition, 1470

Surface Mining Reclamation and Enforcement Office
PROPOSED RULES
Regulatory Program:
Kentucky, 1370–1372
Montana, 1372–1374

Susquehanna River Basin Commission
NOTICES
Grandfathering Registration, 1470
Hearings, 1471–1472
Projects Approved for Consumptive Uses of Water, 1472–1473
Projects Approved:
Minor Modifications, 1470–1471

Trade Representative, Office of United States
NOTICES
Requests for Nominations:
Trade Advisory Committee on Africa, 1473–1474

Transportation Department
See Federal Aviation Administration
See Federal Motor Carrier Safety Administration
See Federal Railroad Administration
NOTICES
Agency Information Collection Activities; Proposals, Submissions, and Approvals, 1477–1479

Transportation Security Administration
RULES
Civil Monetary Penalty Inflation Adjustment, 1317–1330

Treasury Department
See Financial Crimes Enforcement Network
See Internal Revenue Service
NOTICES
Agency Information Collection Activities; Proposals, Submissions, and Approvals:
Foreign Tax Credit, 1486

U.S. Customs and Border Protection
RULES
Civil Monetary Penalty Inflation Adjustment, 1317–1330

Veterans Affairs Department
PROPOSED RULES
Schedule for Rating Disabilities:
The Digestive System, 1522–1551
NOTICES
Agency Information Collection Activities; Proposals, Submissions, and Approvals:
Advertising, Sales, Enrollment Materials, and Candidate Handbooks, 1487–1488
Architect-Engineer Fee Proposal, Contractor Production Report, 1486–1487
Certification Regarding Debarment, Suspension, Ineligibility and Voluntary Exclusion, Specially Adaptive Housing Assistive Technology Grants Criteria and Responses, 1487

Separate Parts In This Issue

Part II
Energy Department, Federal Energy Regulatory Commission, 1490–1520

Part III
Veterans Affairs Department, 1522–1551

Part IV
Energy Department, 1554–1614

Part V
Environmental Protection Agency, 1616–1655

Reader Aids

Consult the Reader Aids section at the end of this issue for phone numbers, online resources, finding aids, and notice of recently enacted public laws.

To subscribe to the Federal Register Table of Contents electronic mailing list, go to https://public.govdelivery.com/accounts/USGPOOFR/subscriber/new, enter your e-mail address, then follow the instructions to join, leave, or manage your subscription.

CFR PARTS AFFECTED IN THIS ISSUE

A cumulative list of the parts affected this month can be found in the Reader Aids section at the end of this issue.

6 CFR
27 1317

8 CFR
270 1317
274a 1317
280 1317

10 CFR
Proposed Rules:
429 1554
430 1554
431 1554

12 CFR
622 1331

14 CFR
39 (8 documents) ... 1333, 1335, 1338, 1340, 1343, 1346, 1349, 1352

18 CFR
12 1490

19 CFR
4 1317

30 CFR
Proposed Rules:
917 1370
926 1372

33 CFR
27 1317
165 1354

36 CFR
Proposed Rules:
7 1374

38 CFR
Proposed Rules:
4 1522

40 CFR
52 (2 documents) 1356, 1358
180 (2 documents) 1360, 1363
Proposed Rules:
63 1616

42 CFR
1008 1367

46 CFR
Proposed Rules:
2 1378

49 CFR
1503 1317

50 CFR
Proposed Rules:
17 1390

Rules and Regulations

Federal Register
Vol. 87, No. 7
Tuesday, January 11, 2022

This section of the FEDERAL REGISTER contains regulatory documents having general applicability and legal effect, most of which are keyed to and codified in the Code of Federal Regulations, which is published under 50 titles pursuant to 44 U.S.C. 1510.

The Code of Federal Regulations is sold by the Superintendent of Documents.

DEPARTMENT OF HOMELAND SECURITY

6 CFR Part 27

8 CFR Parts 270, 274a, and 280

U.S. Customs and Border Protection

19 CFR Part 4

Coast Guard

33 CFR Part 27

Transportation Security Administration

49 CFR Part 1503

RIN 1601–AB05

Civil Monetary Penalty Adjustments for Inflation

AGENCY: Department of Homeland Security.

ACTION: Final rule.

SUMMARY: In this final rule, the Department of Homeland Security (DHS) makes the 2022 annual inflation adjustment to its civil monetary penalties. On November 2, 2015, the President signed into law The Federal Civil Penalties Inflation Adjustment Act Improvements Act of 2015 (the 2015 Act). Pursuant to the 2015 Act, all agencies must adjust their civil monetary penalties annually and publish the adjustment in the **Federal Register**. Accordingly, this final rule adjusts the Department's civil monetary penalties for 2021 pursuant to the 2015 Act and Executive Office of the President (EOP) Office of Management and Budget (OMB) guidance. The new penalties will be effective for penalties assessed after January 11, 2022 whose associated violations occurred after November 2, 2015.

DATES: This rule is effective on January 11, 2022.

FOR FURTHER INFORMATION CONTACT: Hillary Hunnings, 202–282–9043, *hillary.hunnings@hq.dhs.gov.*

SUPPLEMENTARY INFORMATION:

Table of Contents

I. Statutory and Regulatory Background
II. Overview of Final Rule
III. Adjustments by Component
A. Cybersecurity and Infrastructure Security Agency
B. U.S. Customs and Border Protection
C. U.S. Immigration and Customs Enforcement
D. U.S. Coast Guard
E. Transportation Security Administration
IV. Administrative Procedure Act
V. Regulatory Analyses
A. Executive Orders 12866 and 13563
B. Regulatory Flexibility Act
C. Unfunded Mandates Reform Act
D. Paperwork Reduction Act
VI. Signing Authority

I. Statutory and Regulatory Background

On November 2, 2015, the President signed into law the Federal Civil Penalties Inflation Adjustment Act Improvements Act of 2015 (Pub. L. 114–74 section 701 (Nov. 2, 2015)) (2015 Act).[1] The 2015 Act amended the Federal Civil Penalties Inflation Adjustment Act of 1990 (28 U.S.C. 2461 note) to improve the effectiveness of civil monetary penalties and to maintain their deterrent effect. The 2015 Act required agencies to: (1) Adjust the level of civil monetary penalties with an initial ''catch-up'' adjustment through issuance of an interim final rule (IFR) and (2) make subsequent annual adjustments for inflation. Through the ''catch-up'' adjustment, agencies were required to adjust the maximum amounts of civil monetary penalties to more accurately reflect inflation rates.

For the subsequent annual adjustments, the 2015 Act requires agencies to increase the penalty amounts by a cost-of-living adjustment. The 2015 Act directs OMB to provide guidance to agencies each year to assist agencies in making the annual adjustments. The 2015 Act requires agencies to make the annual adjustments no later than January 15 of each year and to publish the adjustments in the **Federal Register**.

Pursuant to the 2015 Act, DHS undertook a review of the civil penalties that DHS and its components administer.[2] On July 1, 2016, DHS published an IFR adjusting the maximum civil monetary penalties with an initial ''catch-up'' adjustment, as required by the 2015 Act.[3] DHS calculated the adjusted penalties based upon nondiscretionary provisions in the 2015 Act and upon guidance that OMB issued to agencies on February 24, 2016.[4] The adjusted penalties were effective for civil penalties assessed after August 1, 2016 (the effective date of the IFR), whose associated violations occurred after November 2, 2015 (the date of enactment of the 2015 Act). On January 27, 2017, DHS published a final rule making the annual adjustment for 2017.[5] On April 2, 2018, DHS made the 2018 annual inflation adjustment.[6] On April 5, 2019, DHS made the 2019 annual inflation adjustment.[7] On June 17, 2020, DHS made the 2020 annual inflation adjustment.[8] On October 18, 2021, DHS made the 2021 annual inflation adjustment.[9]

[1] The 2015 Act was part of the Bipartisan Budget Act of 2015, Public Law 114–74 (Nov. 2, 2015).

[2] The 2015 Act applies to all agency civil penalties except for any penalty (including any addition to tax and additional amount) under the Internal Revenue Code of 1986 (26 U.S.C. 1 *et seq.*) and the Tariff Act of 1930 (19 U.S.C. 1202 *et seq.*). *See* sec. 4(a)(1) of the 2015 Act. In the case of DHS, several civil penalties that are assessed by U.S. Customs and Border Protection (CBP) and the U.S. Coast Guard (USCG) fall under the Tariff Act of 1930, and therefore DHS did not adjust those civil penalties in this rulemaking.

[3] *See* 81 FR 42987.

[4] Office of Mgmt. & Budget, Exec. Office of The President, M–16–06, Implementation of the Federal Civil Penalties Inflation Adjustment Act Improvements Act of 2015, Table A: 2016 Civil Monetary Penalty Catch-Up Adjustment Multiplier by Calendar Year, (Feb. 24, 2016) (*https://www.whitehouse.gov/sites/whitehouse.gov/files/omb/memoranda/2016/m-16-06.pdf*).

[5] *See* 82 FR 8571.

[6] *See* 83 FR 13826.

[7] *See* 84 FR 13499.

[8] *See* 85 FR 36469.

[9] *See* 86 FR 57532.

II. Overview of the Final Rule

This final rule makes the 2022 annual inflation adjustments to civil monetary penalties pursuant to the 2015 Act and pursuant to guidance OMB issued to agencies on December 15, 2021.[10] The penalty amounts in this final rule will be effective for penalties assessed after January 11, 2022 where the associated violation occurred after November 2, 2015. Consistent with OMB guidance, the 2015 Act does not change previously assessed penalties that the agency is actively collecting or has collected.

The adjusted penalty amounts will apply to penalties assessed after the effective date of this final rule. We discuss civil penalties by DHS component in Section III below. For each component identified in Section III, below, we briefly describe the relevant civil penalty (or penalties), and we provide a table showing the increase in the penalties for 2022. In the table for each component, we show (1) the penalty name, (2) the penalty statutory and or regulatory citation, (3) the penalty amount as adjusted in the 2021 final rule, (4) the cost-of-living adjustment multiplier for 2022 that OMB provided in its December 15, 2021, guidance, and (5) the new 2022 adjusted penalty. The 2015 Act instructs agencies to round penalties to the nearest $1. For a more complete discussion of the method used for calculating the initial ''catch-up'' inflation adjustments and a component-by-component breakdown to the nature of the civil penalties and relevant legal authorities, please see the IFR preamble at 81 FR 42987–43000.

III. Adjustments by Component

In the following sections, we briefly describe the civil penalties that DHS and its components, the Cybersecurity and Infrastructure Security Agency (CISA), the U.S. Customs and Border Protection (CBP), the U.S. Immigration and Customs Enforcement (ICE), the U.S. Coast Guard (USCG), and the Transportation Security Administration (TSA), assess. Other components not mentioned do not impose any civil monetary penalties. We include tables at the end of each section, which list the individual adjustments for each penalty.

A. Cybersecurity and Infrastructure Security Agency

The Cybersecurity and Infrastructure Security Agency (CISA) administers only one civil penalty that the 2015 Act affects. That penalty assesses fines for violations of the Chemical Facility Anti-Terrorism Standards (CFATS). CFATS is a program that regulates the security of chemical facilities that, in the discretion of the Secretary, present high levels of security risk. DHS established the CFATS program in 2007 pursuant to section 550 of the Department of Homeland Security Appropriations Act of 2007 (Pub. L. 109–295).[11] The CFATS regulation is located in part 27 of title 6 of the Code of Federal Regulations (CFR). Below is a table showing the 2022 adjustment for the CFATS penalty that CISA administers.

TABLE 1—CFATS CIVIL PENALTY ADJUSTMENT

Penalty name	Citation	Penalty amount as adjusted in the 2021 FR	Multiplier *	New penalty as adjusted by this final rule
Penalty for non-compliance with CFATS regulations.	6 U.S.C. 624(b)(1); 6 CFR 27.300(b)(3).	$35,905 per day	1.06222	$38,139 per day.

* Office of Mgmt. and Budget, Exec. Office of the President, M–22–07, Implementation of Penalty Inflation Adjustments for 2022, Pursuant to the Federal Civil Penalties Inflation Adjustment Act Improvements Act of 2015 (Dec. 15, 2021) (*https://www.whitehouse.gov/wp-content/uploads/2021/12/M-22-07.pdf*).

B. U.S. Customs and Border Protection

The U.S. Customs and Border Protection (CBP) assesses civil monetary penalties under various titles of the United States Code (U.S.C.) and the CFR. These include penalties for certain violations of title 8 of the CFR regarding the Immigration and Nationality Act of 1952 (Pub. L. 82–414, as amended) (INA). The INA contains provisions that impose penalties on persons, including carriers and aliens, who violate specified provisions of the INA. The relevant penalty provisions appear in numerous sections of the INA; however, CBP has enumerated these penalties in regulation in one location—8 CFR 280.53. For a complete list of the INA sections for which penalties are assessed, in addition to a brief description of each violation, see the 2016 IFR preamble at 81 FR 42989–42990. For a complete list and brief description of the non-INA civil monetary penalties assessed by CBP subject to adjustment and a discussion of the history of the DHS and CBP adjustments to the non-INA penalties, see the 2019 annual inflation adjustment final rule preamble at 84 FR 13499, 13500 (April 5, 2019).

Below is a table showing the 2022 adjustment for the penalties that CBP administers.

TABLE 2—U.S. CUSTOMS AND BORDER PROTECTION CIVIL PENALTIES ADJUSTMENTS

Penalty name	Citation	Penalty amount as adjusted in the 2021 FR	Multiplier *	New penalty as adjusted by this final rule
Penalties for non-compliance with arrival and departure manifest requirements for passengers, crewmembers, or occupants transported on commercial vessels or aircraft arriving to or departing from the United States.	8 U.S.C. 1221(g); 8 CFR 280.53(b)(1) (INA section 231(g)).	$1,436	1.06222	$1,525.

[10] Office of Mgmt. and Budget, Exec. Office of the President, M–22–07, Implementation of Penalty Inflation Adjustments for 2022, Pursuant to the Federal Civil Penalties Inflation Adjustment Act Improvements Act of 2015 (Dec. 15, 2021) (*https://www.whitehouse.gov/wp-content/uploads/2021/12/M-22-07.pdf*).

[11] Section 550 has since been superseded by the Protecting and Securing Chemical Facilities from Terrorist Attacks Act of 2014 (Pub. L. 113–254). The new legislation codified the statutory authority for the CFATS program within Title XXI of the Homeland Security Act of 2002, as amended. *See* 6 U.S.C. 621 *et seq.* Public Law 113–254 authorized the CFATS program from January 18, 2015, to January 17, 2019. Public Law 116–150 extends the CFATS program authorization to July 27, 2023.

TABLE 2—U.S. CUSTOMS AND BORDER PROTECTION CIVIL PENALTIES ADJUSTMENTS—Continued

Penalty name	Citation	Penalty amount as adjusted in the 2021 FR	Multiplier *	New penalty as adjusted by this final rule
Penalties for non-compliance with landing requirements at designated ports of entry for aircraft transporting aliens.	8 U.S.C. 1224; 8 CFR 280.53(b)(2) (INA section 234).	$3,901	1.06222	$4,144.
Penalties for failure to depart voluntarily	8 U.S.C. 1229c(d); 8 CFR 280.53(b)(3) (INA section 240B(d)).	$1,644–$8,224	1.06222	$1,746–$8,736.
Penalties for violations of removal orders relating to aliens transported on vessels or aircraft under section 241(d) of the INA, or for costs associated with removal under section 241(e) of the INA.	8 U.S.C. 1253(c)(1)(A); 8 CFR 280.53(b)(4) (INA section 243(c)(1)(A)).	$3,289	1.06222	$3,494.
Penalties for failure to remove alien stowaways under section 241(d)(2) of the INA.	8 U.S.C. 1253(c)(1)(B); 8 CFR 280.53(b)(5) (INA section 243(c)(1)(B)).	$8,224	1.06222	$8,736.
Penalties for failure to report an illegal landing or desertion of alien crewmen, and for each alien not reported on arrival or departure manifest or lists required in accordance with section 251 of the INA.	8 U.S.C. 1281(d); 8 CFR 280.53(b)(6) (INA section 251(d)).	$390 for each alien	1.06222	$414 for each alien.
Penalties for use of alien crewmen for longshore work in violation of section 251(d) of the INA.	8 U.S.C. 1281(d); 8 CFR 280.53(b)(6) (INA section 251(d)).	$9,753	1.06222	$10,360.
Penalties for failure to control, detain, or remove alien crewmen.	8 U.S.C. 1284(a); 8 CFR 280.53(b)(7) (INA section 254(a)).	$975–$5,851	1.06222	$1,036–$6,215.
Penalties for employment on passenger vessels of aliens afflicted with certain disabilities.	8 U.S.C. 1285; 8 CFR 280.53(b)(8) (INA section 255).	$1,951	1.06222	$2,072.
Penalties for discharge of alien crewmen.	8 U.S.C. 1286; 8 CFR 280.53(b)(9) (INA section 256).	$2,925–$5,851	1.06222	$3,107–$6,215.
Penalties for bringing into the United States alien crewmen with intent to evade immigration laws.	8 U.S.C. 1287; 8 CFR 280.53(b)(10) (INA section 257).	$19,505	1.06222	$20,719.
Penalties for failure to prevent the unauthorized landing of aliens.	8 U.S.C. 1321(a); 8 CFR 280.53(b)(11) (INA section 271(a)).	$5,851	1.06222	$6,215.
Penalties for bringing to the United States aliens subject to denial of admission on a health-related ground.	8 U.S.C. 1322(a); 8 CFR 280.53(b)(12) (INA section 272(a)).	$5,851	1.06222	$6,215.
Penalties for bringing to the United States aliens without required documentation.	8 U.S.C. 1323(b); 8 CFR 280.53(b)(13) (INA section 273(b)).	$5,851	1.06222	$6,215.
Penalties for failure to depart	8 U.S.C. 1324d; 8 CFR 280.53(b)(14) (INA section 274D).	$823	1.06222	$874.
Penalties for improper entry	8 U.S.C. 1325(b); 8 CFR 280.53(b)(15) (INA section 275(b)).	$82–$412	1.06222	$87–$438.
Penalty for dealing in or using empty stamped imported liquor containers.	19 U.S.C. 469	$546	1.06222	** $580.
Penalty for employing a vessel in a trade without a required Certificate of Documentation.	19 U.S.C. 1706a; 19 CFR 4.80(i).	$1,368	1.06222	$1,453.
Penalty for transporting passengers coastwise for hire by certain vessels (known as Bowaters vessels) that do not meet specified conditions.	46 U.S.C. 12118(f)(3)	$546	1.06222	** $580.
Penalty for transporting passengers between coastwise points in the United States by a non-coastwise qualified vessel.	46 U.S.C. 55103(b); 19 CFR 4.80(b)(2).	$822	1.06222	$873.

TABLE 2—U.S. CUSTOMS AND BORDER PROTECTION CIVIL PENALTIES ADJUSTMENTS—Continued

Penalty name	Citation	Penalty amount as adjusted in the 2021 FR	Multiplier *	New penalty as adjusted by this final rule
Penalty for towing a vessel between coastwise points in the United States by a non-coastwise qualified vessel.	46 U.S.C. 55111(c); 19 CFR 4.92.	$957–$3,011, plus $164 per ton.	1.06222	$1,017–$3,198 plus $174 per ton.

* Office of Mgmt. and Budget, Exec. Office of the President, M–22–07, Implementation of Penalty Inflation Adjustments for 2022, Pursuant to the Federal Civil Penalties Inflation Adjustment Act Improvements Act of 2015 (Dec. 15, 2021) (*https://www.whitehouse.gov/wp-content/uploads/2021/12/M-22-07.pdf*).
** No applicable conforming edit to regulatory text.

C. U.S. Immigration and Customs Enforcement

U.S. Immigration and Customs Enforcement (ICE) assesses civil monetary penalties for certain employment-related violations arising from the INA. ICE's civil penalties are located in title 8 of the CFR.

There are three different sections in the INA that impose civil monetary penalties for violations of the laws that relate to employment actions: Sections 274A, 274B, and 274C. ICE has primary enforcement responsibilities for two of these civil penalty provisions (sections 274A and 274C), and the Department of Justice (DOJ) has enforcement responsibilities for one of these civil penalty provisions (section 274B). The INA, in sections 274A and 274C, provides for imposition of civil penalties for various specified unlawful acts pertaining to the employment eligibility verification process (Form I–9, Employment Eligibility Verification), the employment of unauthorized aliens, and document fraud.

Because both DHS and DOJ implement the three employment-related penalty sections in the INA, both Departments' implementing regulations reflect the civil penalty amounts. For a complete description of the civil money penalties assessed and a discussion of DHS's and DOJ's efforts to update the penalties in years past, see the IFR preamble at 81 FR 42991. Below is a table showing the 2022 adjustment for the penalties that ICE administers.[12]

TABLE 3—U.S. IMMIGRATION AND CUSTOMS ENFORCEMENT CIVIL PENALTIES ADJUSTMENTS

Penalty name	Citation	Penalty amount as adjusted in the 2021 FR	Multiplier *	New penalty as adjusted by this final rule
Civil penalties for failure to depart voluntarily, INA section 240B(d).	8 U.S.C. 1229c(d); 8 CFR 280.53(b)(3).	$1,644–$8,224	1.06222	$1,746–$8,736.
Civil penalties for violation of INA sections 274C(a)(1)–(a)(4), penalty for first offense.	8 CFR 270.3(b)(1)(ii)(A)	$487–$3,901	1.06222	$517–$4,144.
Civil penalties for violation of INA sections 274C(a)(5)–(a)(6), penalty for first offense.	8 CFR 270.3(b)(1)(ii)(B)	$412–$3,289	1.06222	$438–$3,494.
Civil penalties for violation of INA sections 274C(a)(1)–(a)(4), penalty for subsequent offenses.	8 CFR 270.3(b)(1)(ii)(C)	$3,901–$9,753	1.06222	$4,144–$10,360.
Civil penalties for violation of INA sections 274C(a)(5)–(a)(6), penalty for subsequent offenses.	8 CFR 270.3(b)(1)(ii)(D)	$3,289–$8,224	1.06222	$3,494–$8,736.
Violation/prohibition of indemnity bonds	8 CFR 274a.8(b)	$2,360	1.06222	$2,507.
Civil penalties for knowingly hiring, recruiting, referral, or retention of unauthorized aliens—Penalty for first offense (per unauthorized alien).	8 CFR 274a.10(b)(1)(ii)(A)	$590–$4,722	1.06222	$627–$5,016.
Penalty for second offense (per unauthorized alien).	8 CFR 274a.10(b)(1)(ii)(B)	$4,722–$11,803	1.06222	$5,016–$12,537.
Penalty for third or subsequent offense (per unauthorized alien).	8 CFR 274a.10(b)(1)(ii)(C)	$7,082–$23,607	1.06222	$7,523–$25,076.
Civil penalties for I–9 paperwork violations.	8 CFR 274a.10(b)(2)	$237–$2,360	1.06222	$252–$2,507.
Civil penalties for failure to depart, INA section 274D.	8 U.S.C. 1324d; 8 CFR 280.53(b)(14).	$823	1.06222	$874.

* Office of Mgmt. and Budget, Exec. Office of the President, M–22–07, Implementation of Penalty Inflation Adjustments for 2022, Pursuant to the Federal Civil Penalties Inflation Adjustment Act Improvements Act of 2015 (Dec. 15, 2021) (*https://www.whitehouse.gov/wp-content/uploads/2021/12/M-22-07.pdf*).

[12] Table 3 also includes two civil penalties that are also listed as penalties administered by CBP. These are penalties for failure to depart voluntarily, INA section 240B(d), and failure to depart after a final order of removal, INA section 274D. Both CBP and ICE may administer these penalties, but as ICE is the DHS component primarily responsible for assessing and collecting them, they are also listed among the penalties ICE administers.

D. U.S. Coast Guard

The Coast Guard is authorized to assess close to 150 penalties involving maritime safety and security and environmental stewardship that are critical to the continued success of Coast Guard missions. Various statutes in titles 14, 16, 19, 33, 42, 46, and 49 of the U.S.C. authorize these penalties. Titles 33 and 46 authorize the vast majority of these penalties as these statutes deal with navigation, navigable waters, and shipping. For a complete discussion of the civil monetary penalties assessed by the Coast Guard, see the 2016 IFR preamble at 81 FR 42992.

The Coast Guard has identified the penalties it administers, adjusted those penalties for inflation, and is listing those new penalties in a table located in the CFR—specifically, Table 1 in 33 CFR 27.3. Table 1 in 33 CFR 27.3 identifies the statutes that provide the Coast Guard with civil monetary penalty authority and sets out the inflation-adjusted maximum penalty that the Coast Guard may impose pursuant to each statutory provision. Table 1 in 33 CFR 27.3 provides the current maximum penalty for violations that occurred after November 2, 2015.

The applicable civil penalty amounts for violations occurring on or before November 2, 2015, are set forth in previously published regulations amending 33 CFR part 27. To find the applicable penalty amount for a violation that occurred on or before November 2, 2015, look to the prior versions of the CFR that pertain to the date on which the violation occurred.

Table 4 below shows the 2022 adjustment for the penalties that the Coast Guard administers.

TABLE 4—U.S. COAST GUARD CIVIL PENALTIES ADJUSTMENTS

Penalty name	Citation	Penalty amount as adjusted in the 2021 FR	Multiplier *	New penalty as adjusted by this final rule
Saving Life and Property	14 U.S.C. 521(c)	$10,967	1.06222	$11,649
Saving Life and Property; Intentional Interference with Broadcast.	14 U.S.C. 521(e)	1,125	1.06222	1,195
Confidentiality of Medical Quality Assurance Records (first offense).	14 U.S.C. 936(i); 33 CFR 27.3	5,508	1.06222	5,851
Confidentiality of Medical Quality Assurance Records (subsequent offenses).	14 U.S.C. 936(i); 33 CFR 27.3	36,726	1.06222	39,011
Obstruction of Revenue Officers by Masters of Vessels.	19 U.S.C. 70; 33 CFR 27.3	8,212	1.06222	8,723
Obstruction of Revenue Officers by Masters of Vessels-Minimum Penalty.	19 U.S.C. 70; 33 CFR 27.3	1,916	1.06222	2,035
Failure to Stop Vessel When Directed; Master, Owner, Operator or Person in Charge.	19 U.S.C. 1581(d)	** 5,000	N/A	** 5,000
Failure to Stop Vessel When Directed; Master, Owner, Operator or Person in Charge-Minimum Penalty.	19 U.S.C. 1581(d)	** 1,000	N/A	** 1,000
Anchorage Ground/Harbor Regulations General	33 U.S.C. 471; 33 CFR 27.3	11,906	1.06222	12,647
Anchorage Ground/Harbor Regulations St. Mary's river.	33 U.S.C. 474; 33 CFR 27.3	822	1.06222	873
Bridges/Failure to Comply with Regulations	33 U.S.C. 495(b); 33 CFR 27.3	30,058	1.06222	31,928
Bridges/Drawbridges	33 U.S.C. 499(c); 33 CFR 27.3	30,058	1.06222	31,928
Bridges/Failure to Alter Bridge Obstructing Navigation.	33 U.S.C. 502(c); 33 CFR 27.3	30,058	1.06222	31,928
Bridges/Maintenance and Operation	33 U.S.C. 533(b); 33 CFR 27.3	30,058	1.06222	31,928
Bridge to Bridge Communication; Master, Person in Charge or Pilot.	33 U.S.C. 1208(a); 33 CFR 27.3	2,190	1.06222	2,326
Bridge to Bridge Communication; Vessel	33 U.S.C. 1208(b); 33 CFR 27.3	2,190	1.06222	2,326
Oil/Hazardous Substances: Discharges (Class I per violation).	33 U.S.C. 1321(b)(6)(B)(i); 33 CFR 27.3.	19,505	1.06222	20,719
Oil/Hazardous Substances: Discharges (Class I total under paragraph).	33 U.S.C. 1321(b)(6)(B)(i); 33 CFR 27.3.	48,762	1.06222	51,796
Oil/Hazardous Substances: Discharges (Class II per day of violation).	33 U.S.C. 1321(b)(6)(B)(ii); 33 CFR 27.3.	19,505	1.06222	20,719
Oil/Hazardous Substances: Discharges (Class II total under paragraph).	33 U.S.C. 1321(b)(6)(B)(ii); 33 CFR 27.3.	243,808	1.06222	258,978
Oil/Hazardous Substances: Discharges (per day of violation) Judicial Assessment.	33 U.S.C. 1321(b)(7)(A); 33 CFR 27.3.	48,762	1.06222	51,796
Oil/Hazardous Substances: Discharges (per barrel of oil or unit discharged) Judicial Assessment.	33 U.S.C. 1321(b)(7)(A); 33 CFR 27.3.	1,951	1.06222	2,072
Oil/Hazardous Substances: Failure to Carry Out Removal/Comply With Order (Judicial Assessment).	33 U.S.C. 1321(b)(7)(B); 33 CFR 27.3.	48,762	1.06222	51,796
Oil/Hazardous Substances: Failure to Comply with Regulation Issued Under 1321(j) (Judicial Assessment).	33 U.S.C. 1321(b)(7)(C); 33 CFR 27.3.	48,762	1.06222	51,796
Oil/Hazardous Substances: Discharges, Gross Negligence (per barrel of oil or unit discharged) Judicial Assessment.	33 U.S.C. 1321(b)(7)(D); 33 CFR 27.3.	5,851	1.06222	6,215
Oil/Hazardous Substances: Discharges, Gross Negligence-Minimum Penalty (Judicial Assessment).	33 U.S.C. 1321(b)(7)(D); 33 CFR 27.3.	195,047	1.06222	207,183

TABLE 4—U.S. COAST GUARD CIVIL PENALTIES ADJUSTMENTS—Continued

Penalty name	Citation	Penalty amount as adjusted in the 2021 FR	Multiplier *	New penalty as adjusted by this final rule
Marine Sanitation Devices; Operating	33 U.S.C. 1322(j); 33 CFR 27.3	8,212	1.06222	8,723
Marine Sanitation Devices; Sale or Manufacture	33 U.S.C. 1322(j); 33 CFR 27.3	21,896	1.06222	23,258
International Navigation Rules; Operator	33 U.S.C. 1608(a); 33 CFR 27.3	15,352	1.06222	16,307
International Navigation Rules; Vessel	33 U.S.C. 1608(b); 33 CFR 27.3	15,352	1.06222	16,307
Pollution from Ships; General	33 U.S.C. 1908(b)(1); 33 CFR 27.3	76,764	1.06222	81,540
Pollution from Ships; False Statement	33 U.S.C. 1908(b)(2); 33 CFR 27.3	15,352	1.06222	16,307
Inland Navigation Rules; Operator	33 U.S.C. 2072(a); 33 CFR 27.3	15,352	1.06222	16,307
Inland Navigation Rules; Vessel	33 U.S.C. 2072(b); 33 CFR 27.3	15,352	1.06222	16,307
Shore Protection; General	33 U.S.C. 2609(a); 33 CFR 27.3	54,157	1.06222	57,527
Shore Protection; Operating Without Permit	33 U.S.C. 2609(b); 33 CFR 27.3	21,663	1.06222	23,011
Oil Pollution Liability and Compensation	33 U.S.C. 2716a(a); 33 CFR 27.3	48,762	1.06222	51,796
Clean Hulls	33 U.S.C. 3852(a)(1)(A); 33 CFR 27.3.	44,646	1.06222	47,424
Clean Hulls-related to false statements	33 U.S.C. 3852(a)(1)(A); 33 CFR 27.3.	59,528	1.06222	63,232
Clean Hulls-Recreational Vessel	33 U.S.C. 3852(c); 33 CFR 27.3	5,953	1.06222	6,323
Hazardous Substances, Releases, Liability, Compensation (Class I).	42 U.S.C. 9609(a); 33 CFR 27.3	59,017	1.06222	62,689
Hazardous Substances, Releases, Liability, Compensation (Class II).	42 U.S.C. 9609(b); 33 CFR 27.3	59,017	1.06222	62,689
Hazardous Substances, Releases, Liability, Compensation (Class II subsequent offense).	42 U.S.C. 9609(b); 33 CFR 27.3	177,053	1.06222	188,069
Hazardous Substances, Releases, Liability, Compensation (Judicial Assessment).	42 U.S.C. 9609(c); 33 CFR 27.3	59,017	1.06222	62,689
Hazardous Substances, Releases, Liability, Compensation (Judicial Assessment subsequent offense).	42 U.S.C. 9609(c); 33 CFR 27.3	177,053	1.06222	188,069
Safe Containers for International Cargo	46 U.S.C. 80509; 33 CFR 27.3	6,451	1.06222	6,852
Suspension of Passenger Service	46 U.S.C. 70305; 33 CFR 27.3	64,515	1.06222	68,529
Vessel Inspection or Examination Fees	46 U.S.C. 2110(e); 33 CFR 27.3	9,753	1.06222	10,360
Alcohol and Dangerous Drug Testing	46 U.S.C. 2115; 33 CFR 27.3	7,939	1.06222	8,433
Negligent Operations: Recreational Vessels	46 U.S.C. 2302(a); 33 CFR 27.3	7,181	1.06222	7,628
Negligent Operations: Other Vessels	46 U.S.C. 2302(a); 33 CFR 27.3	35,905	1.06222	38,139
Operating a Vessel While Under the Influence of Alcohol or a Dangerous Drug.	46 U.S.C. 2302(c)(1); 33 CFR 27.3	7,939	1.06222	8,433
Vessel Reporting Requirements: Owner, Charterer, Managing Operator, or Agent.	46 U.S.C. 2306(a)(4); 33 CFR 27.3	12,363	1.06222	13,132
Vessel Reporting Requirements: Master	46 U.S.C. 2306(b)(2); 33 CFR 27.3	2,473	1.06222	2,627
Immersion Suits	46 U.S.C. 3102(c)(1); 33 CFR 27.3	12,363	1.06222	13,132
Inspection Permit	46 U.S.C. 3302(i)(5); 33 CFR 27.3	2,579	1.06222	2,739
Vessel Inspection; General	46 U.S.C. 3318(a); 33 CFR 27.3	12,363	1.06222	13,132
Vessel Inspection; Nautical School Vessel	46 U.S.C. 3318(g); 33 CFR 27.3	12,363	1.06222	13,132
Vessel Inspection; Failure to Give Notice in accordance with (IAW) 3304(b).	46 U.S.C. 3318(h); 33 CFR 27.3	2,473	1.06222	2,627
Vessel Inspection; Failure to Give Notice IAW 3309(c).	46 U.S.C. 3318(i); 33 CFR 27.3	2,473	1.06222	2,627
Vessel Inspection; Vessel ≥1600 Gross Tons	46 U.S.C. 3318(j)(1); 33 CFR 27.3	24,730	1.06222	26,269
Vessel Inspection; Vessel <1600 Gross Tons (GT).	46 U.S.C. 3318(j)(1); 33 CFR 27.3	4,946	1.06222	5,254
Vessel Inspection; Failure to Comply with 3311(b).	46 U.S.C. 3318(k); 33 CFR 27.3	24,730	1.06222	26,269
Vessel Inspection; Violation of 3318(b)–3318(f)	46 U.S.C. 3318(l); 33 CFR 27.3	12,363	1.06222	13,132
List/count of Passengers	46 U.S.C. 3502(e); 33 CFR 27.3	257	1.06222	273
Notification to Passengers	46 U.S.C. 3504(c); 33 CFR 27.3	25,780	1.06222	27,384
Notification to Passengers; Sale of Tickets	46 U.S.C. 3504(c); 33 CFR 27.3	1,288	1.06222	1,368
Copies of Laws on Passenger Vessels; Master	46 U.S.C. 3506; 33 CFR 27.3	516	1.06222	548
Liquid Bulk/Dangerous Cargo	46 U.S.C. 3718(a)(1); 33 CFR 27.3	64,452	1.06222	68,462
Uninspected Vessels	46 U.S.C. 4106; 33 CFR 27.3	10,832	1.06222	11,506
Recreational Vessels (maximum for related series of violations).	46 U.S.C. 4311(b)(1); 33 CFR 27.3	341,000	1.06222	362,217
Recreational Vessels; Violation of 4307(a)	46 U.S.C. 4311(b)(1); 33 CFR 27.3	6,820	1.06222	7,244
Recreational vessels	46 U.S.C. 4311(c); 33 CFR 27.3	2,579	1.06222	2,739
Uninspected Commercial Fishing Industry Vessels.	46 U.S.C. 4507; 33 CFR 27.3	10,832	1.06222	11,506
Abandonment of Barges	46 U.S.C. 4703; 33 CFR 27.3	1,835	1.06222	1,949
Load Lines	46 U.S.C. 5116(a); 33 CFR 27.3	11,803	1.06222	12,537
Load Lines; Violation of 5112(a)	46 U.S.C. 5116(b); 33 CFR 27.3	23,607	1.06222	25,076
Load Lines; Violation of 5112(b)	46 U.S.C. 5116(c); 33 CFR 27.3	11,803	1.06222	12,537
Reporting Marine Casualties	46 U.S.C. 6103(a); 33 CFR 27.3	41,120	1.06222	43,678
Reporting Marine Casualties; Violation of 6104	46 U.S.C. 6103(b); 33 CFR 27.3	10,832	1.06222	11,506

TABLE 4—U.S. COAST GUARD CIVIL PENALTIES ADJUSTMENTS—Continued

Penalty name	Citation	Penalty amount as adjusted in the 2021 FR	Multiplier *	New penalty as adjusted by this final rule
Manning of Inspected Vessels; Failure to Report Deficiency in Vessel Complement.	46 U.S.C. 8101(e); 33 CFR 27.3	1,951	1.06222	2,072
Manning of Inspected Vessels	46 U.S.C. 8101(f); 33 CFR 27.3	19,505	1.06222	20,719
Manning of Inspected Vessels; Employing or Serving in Capacity not Licensed by USCG.	46 U.S.C. 8101(g); 33 CFR 27.3	19,505	1.06222	20,719
Manning of Inspected Vessels; Freight Vessel <100 GT, Small Passenger Vessel, or Sailing School Vessel.	46 U.S.C. 8101(h); 33 CFR 27.3	2,579	1.06222	2,739
Watchmen on Passenger Vessels	46 U.S.C. 8102(a)	2,579	1.06222	2,739
Citizenship Requirements	46 U.S.C. 8103(f)	1,288	1.06222	1,368
Watches on Vessels; Violation of 8104(a) or (b)	46 U.S.C. 8104(i)	19,505	1.06222	20,719
Watches on Vessels; Violation of 8104(c), (d), (e), or (h).	46 U.S.C. 8104(j)	19,505	1.06222	20,719
Staff Department on Vessels	46 U.S.C. 8302(e)	257	1.06222	273
Officer's Competency Certificates	46 U.S.C. 8304(d)	257	1.06222	273
Coastwise Pilotage; Owner, Charterer, Managing Operator, Agent, Master or Individual in Charge.	46 U.S.C. 8502(e)	19,505	1.06222	20,719
Coastwise Pilotage; Individual	46 U.S.C. 8502(f)	19,505	1.06222	20,719
Federal Pilots	46 U.S.C. 8503	61,820	1.06222	65,666
Merchant Mariners Documents	46 U.S.C. 8701(d)	1,288	1.06222	1,368
Crew Requirements	46 U.S.C. 8702(e)	19,505	1.06222	20,719
Small Vessel Manning	46 U.S.C. 8906	41,120	1.06222	43,678
Pilotage: Great Lakes; Owner, Charterer, Managing Operator, Agent, Master or Individual in Charge.	46 U.S.C. 9308(a)	19,505	1.06222	20,719
Pilotage: Great Lakes; Individual	46 U.S.C. 9308(b)	19,505	1.06222	20,719
Pilotage: Great Lakes; Violation of 9303	46 U.S.C. 9308(c)	19,505	1.06222	20,719
Failure to Report Sexual Offense	46 U.S.C. 10104(b)	10,366	1.06222	11,011
Pay Advances to Seamen	46 U.S.C. 10314(a)(2)	1,288	1.06222	1,368
Pay Advances to Seamen; Remuneration for Employment.	46 U.S.C. 10314(b)	1,288	1.06222	1,368
Allotment to Seamen	46 U.S.C. 10315(c)	1,288	1.06222	1,368
Seamen Protection; General	46 U.S.C. 10321	8,935	1.06222	9,491
Coastwise Voyages: Advances	46 U.S.C. 10505(a)(2)	8,935	1.06222	9,491
Coastwise Voyages: Advances; Remuneration for Employment.	46 U.S.C. 10505(b)	8,935	1.06222	9,491
Coastwise Voyages: Seamen Protection; General.	46 U.S.C. 10508(b)	8,935	1.06222	9,491
Effects of Deceased Seamen	46 U.S.C. 10711	516	1.06222	548
Complaints of Unfitness	46 U.S.C. 10902(a)(2)	1,288	1.06222	1,368
Proceedings on Examination of Vessel	46 U.S.C. 10903(d)	257	1.06222	273
Permission to Make Complaint	46 U.S.C. 10907(b)	1,288	1.06222	1,368
Accommodations for Seamen	46 U.S.C. 11101(f)	1,288	1.06222	1,368
Medicine Chests on Vessels	46 U.S.C. 11102(b)	1,288	1.06222	1,368
Destitute Seamen	46 U.S.C. 11104(b)	257	1.06222	273
Wages on Discharge	46 U.S.C. 11105(c)	1,288	1.06222	1,368
Log Books; Master Failing to Maintain	46 U.S.C. 11303(a)	516	1.06222	548
Log Books; Master Failing to Make Entry	46 U.S.C. 11303(b)	516	1.06222	548
Log Books; Late Entry	46 U.S.C. 11303(c)	387	1.06222	411
Carrying of Sheath Knives	46 U.S.C. 11506	129	1.06222	137
Vessel Documentation	46 U.S.C. 12151(a)(1)	16,884	1.06222	17,935
Documentation of Vessels—Related to Activities involving mobile offshore drilling units.	46 U.S.C. 12151 (a)(2)	28,142	1.06222	29,893
Vessel Documentation; Fishery Endorsement	46 U.S.C. 12151(c)	129,032	1.06222	137,060
Numbering of Undocumented Vessels—Willful violation.	46 U.S.C. 12309(a)	12,891	1.06222	13,693
Numbering of Undocumented Vessels	46 U.S.C. 12309(b)	2,579	1.06222	2,739
Vessel Identification System	46 U.S.C. 12507(b)	21,663	1.06222	23,011
Measurement of Vessels	46 U.S.C. 14701	47,216	1.06222	50,154
Measurement; False Statements	46 U.S.C. 14702	47,216	1.06222	50,154
Commercial Instruments and Maritime Liens	46 U.S.C. 31309	21,663	1.06222	23,011
Commercial Instruments and Maritime Liens; Mortgagor.	46 U.S.C. 31330(a)(2)	21,663	1.06222	23,011
Commercial Instruments and Maritime Liens; Violation of 31329.	46 U.S.C. 31330(b)(2)	54,157	1.06222	57,527
Ports and Waterway Safety Regulations	46 U.S.C. 70036(a); 33 CFR 27.3	97,014	1.06222	103,050
Vessel Navigation: Regattas or Marine Parades; Unlicensed Person in Charge.	46 U.S.C. 70041(d)(1)(B); 33 CFR 27.3.	9,753	1.06222	10,360

TABLE 4—U.S. COAST GUARD CIVIL PENALTIES ADJUSTMENTS—Continued

Penalty name	Citation	Penalty amount as adjusted in the 2021 FR	Multiplier *	New penalty as adjusted by this final rule
Vessel Navigation: Regattas or Marine Parades; Owner Onboard Vessel.	46 U.S.C. 70041(d)(1)(C); 33 CFR 27.3.	9,753	1.06222	10,360
Vessel Navigation: Regattas or Marine Parades; Other Persons.	46 U.S.C. 70041(d)(1)(D); 33 CFR 27.3.	4,876	1.06222	5,179
Port Security	46 U.S.C. 70119(a)	35,905	1.06222	38,139
Port Security—Continuing Violations	46 U.S.C. 70119(b)	64,515	1.06222	68,529
Maritime Drug Law Enforcement	46 U.S.C. 70506(c)	5,953	1.06222	6,323
Hazardous Materials: Related to Vessels	49 U.S.C. 5123(a)(1)	84,425	1.06222	89,678
Hazardous Materials: Related to Vessels-Penalty from Fatalities, Serious Injuries/Illness or substantial Damage to Property.	49 U.S.C. 5123(a)(2)	196,992	1.06222	209,249
Hazardous Materials: Related to Vessels; Training.	49 U.S.C. 5123(a)(3)	508	1.06222	540

* Office of Mgmt. and Budget, Exec. Office of the President, M–22–07, Implementation of Penalty Inflation Adjustments for 2022, Pursuant to the Federal Civil Penalties Inflation Adjustment Act Improvements Act of 2015 (Dec. 15, 2021) (*https://www.whitehouse.gov/wp-content/uploads/2021/12/M-22-07.pdf*).

** Enacted under the Tariff Act; exempt from inflation adjustments.

E. Transportation Security Administration

The Transportation Security Administration (TSA) is updating its civil penalties regulation in accordance with the 2015 Act. Pursuant to its statutory authority in 49 U.S.C. 46301(a)(1), (4), (5), (6), 49 U.S.C. 46301(d)(2), (8), and 49 U.S.C. 114(u), TSA may impose penalties for violations of statutes that TSA administers, including penalties for violations of implementing regulations or orders. Note that pursuant to division K, title I, sec. 1904(b)(1)(I), of Public Law 115–254, 132 Stat. 3186, 3545 (Oct. 5, 2018), the TSA Modernization Act—part of the FAA Reauthorization Act of 2018—the former 49 U.S.C. 114(v), which relates to penalties, was redesignated as 49 U.S.C. 114(u).

TSA assesses these penalties for a wide variety of aviation and surface security requirements, including violations of TSA's requirements applicable to Transportation Worker Identification Credentials (TWIC),[13] as well as violations of requirements described in chapter 449 of title 49 of the U.S.C. These penalties can apply to a wide variety of situations, as described in the statutory and regulatory provisions, as well as in guidance that TSA publishes. Below is a table showing the 2022 adjustment for the penalties that TSA administers.

TABLE 5—TRANSPORTATION SECURITY ADMINISTRATION CIVIL PENALTIES ADJUSTMENTS

Penalty name	Citation	Penalty amount as adjusted in the 2021 FR	Multiplier *	New penalty as adjusted by this final rule
Violation of 49 U.S.C. ch. 449 (except secs. 44902, 44903(d), 44907(a)–(d)(1)(A), 44907(d)(1)(C)–(f), 44908, and 44909), or 49 U.S.C. 46302 or 46303, a regulation prescribed, or order issued thereunder by a person operating an aircraft for the transportation of passengers or property for compensation.	49 U.S.C. 46301(a)(1), (4), (5), (6); 49 U.S.C. 46301(d)(2), (8); 49 CFR 1503.401(c)(3).	$35,188 (up to a total of $562,996 per civil penalty action).	1.06222	$37,377 (up to a total of $598,026 per civil penalty action).
Violation of 49 U.S.C. ch. 449 (except secs. 44902, 44903(d), 44907(a)–(d)(1)(A), 44907(d)(1)(C)–(f), 44908, and 44909), or 49 U.S.C. 46302 or 46303, a regulation prescribed, or order issued thereunder by an individual (except an airman serving as an airman), any person not operating an aircraft for the transportation of passengers or property for compensation, or a small business concern.	49 U.S.C. 46301(a)(1), (4), (5); 49 U.S.C. 46301(d)(8); 49 CFR 1503.401(c)(1) and (2).	$14,074 (up to a total of $70,375 for individuals or small businesses, $562,996 for others).	1.06222	$14,950 (up to a total of $74,754 for individuals or small businesses, $598,026 for others).

[13] *See, e.g.,* 46 U.S.C. 70105, 49 U.S.C. 46302 and 46303, and 49 U.S.C. chapter 449.

TABLE 5—TRANSPORTATION SECURITY ADMINISTRATION CIVIL PENALTIES ADJUSTMENTS—Continued

Penalty name	Citation	Penalty amount as adjusted in the 2021 FR	Multiplier *	New penalty as adjusted by this final rule
Violation of any other provision of title 49 U.S.C. or of 46 U.S.C. ch. 701, a regulation prescribed, or order issued thereunder.	49 U.S.C. 114(u); 49 CFR 1503.401(b).	$12,045 (up to a total of $60,226 total for individuals or small businesses, $481,802 for others).	1.06222	$12,794 (up to a total of $63,973 total for individuals or small businesses, $511,780 for others).

* Office of Mgmt. and Budget, Exec. Office of the President, M–22–07, Implementation of Penalty Inflation Adjustments for 2022, Pursuant to the Federal Civil Penalties Inflation Adjustment Act Improvements Act of 2015 (Dec. 15, 2021) (*https://www.whitehouse.gov/wp-content/uploads/2021/12/M-22-07.pdf*).

IV. Administrative Procedure Act

DHS is promulgating this final rule to ensure that the amount of civil penalties that DHS assesses or enforces reflects the statutorily mandated ranges as adjusted for inflation. The 2015 Act provides a clear formula for adjustment of the civil penalties, leaving DHS and its components with little room for discretion. DHS and its components have been charged only with performing ministerial computations to determine the amounts of adjustments for inflation to civil monetary penalties. In these annual adjustments DHS is merely updating the penalty amounts by applying the cost-of-living adjustment multiplier that OMB has provided to agencies. Furthermore, the 2015 Act specifically instructed that agencies make the required annual adjustments notwithstanding section 553 of title 5 of the U.S.C. Thus, as specified in the 2015 Act, the prior public notice-and-comment procedures and delayed effective date requirements of the Administrative Procedure Act (APA) do not apply to this rule. Further, as described above, this rule makes minor amendments to the regulations to reflect changes required by clear statutory authority, and DHS finds that prior notice and comment procedures and a delayed effective date for these amendments are unnecessary.

V. Regulatory Analyses

A. Executive Orders 12866 and 13563

Executive Orders 12866 (''Regulatory Planning and Review'') and 13563 (''Improving Regulation and Regulatory Review'') direct agencies to assess the costs and benefits of available regulatory alternatives and, if regulation is necessary, to select regulatory approaches that maximize net benefits (including potential economic, environmental, public health and safety effects, distributive impacts, and equity). Executive Order 13563 emphasizes the importance of quantifying both costs and benefits, of reducing costs, of harmonizing rules, and of promoting flexibility.

OMB has not designated this final rule a ''significant regulatory action'' under section 3(f) of Executive Order 12866. Accordingly, OMB has not reviewed this rule.

This final rule makes nondiscretionary adjustments to existing civil monetary penalties in accordance with the 2015 Act and OMB guidance.[14] DHS therefore did not consider alternatives and does not have the flexibility to alter the adjustments of the civil monetary penalty amounts as provided in this rule. To the extent this final rule increases civil monetary penalties, it would result in an increase in transfers from persons or entities assessed a civil monetary penalty to the government.

B. Regulatory Flexibility Act

The Regulatory Flexibility Act applies only to rules for which an agency publishes a notice of proposed rulemaking pursuant to 5 U.S.C. 553(b). See 5 U.S.C. 601–612. The Regulatory Flexibility Act does not apply to this final rule because a notice of proposed rulemaking was not required for the reasons stated above.

C. Unfunded Mandates Reform Act

The Unfunded Mandates Reform Act of 1995, 2 U.S.C. 1531–1538, requires Federal agencies to assess the effects of their discretionary regulatory actions. In particular, the Act addresses actions that may result in the expenditure by a State, local, or Tribal government, in the aggregate, or by the private sector of $100,000,000 (adjusted for inflation) or more in any one year. This final rule will not result in such an expenditure.

[14] Office of Mgmt. and Budget, Exec. Office of the President, M–22–07, Implementation of Penalty Inflation Adjustments for 2022, Pursuant to the Federal Civil Penalties Inflation Adjustment Act Improvements Act of 2015 (Dec. 15, 2021) (*https://www.whitehouse.gov/wp-content/uploads/2021/12/M-22-07.pdf*).

D. Paperwork Reduction Act

The provisions of the Paperwork Reduction Act of 1995, 44 U.S.C. chapter 35, and its implementing regulations, 5 CFR part 1320, do not apply to this final rule, because this final rule does not trigger any new or revised recordkeeping or reporting.

VI. Signing Authorities

The amendments to 19 CFR part 4 in this document are issued in accordance with 19 CFR 0.2(a), which provides that the authority of the Secretary of the Treasury with respect to CBP regulations that are not related to customs revenue functions was transferred to the Secretary of Homeland Security pursuant to Section 403(l) of the Homeland Security Act of 2002. Accordingly, this final rule to amend such regulations may be signed by the Secretary of Homeland Security (or his or her delegate).

List of Subjects

6 CFR Part 27

Reporting and recordkeeping requirements, Security measures.

8 CFR Part 270

Administrative practice and procedure, Aliens, Employment, Fraud, Penalties.

8 CFR Part 274a

Administrative practice and procedure, Aliens, Employment, Penalties, Reporting and recordkeeping requirements.

8 CFR Part 280

Administrative practice and procedure, Immigration, Penalties.

19 CFR Part 4

Exports, Freight, Harbors, Maritime carriers, Oil pollution, Reporting and recordkeeping requirements, Vessels.

33 CFR Part 27

Administrative practice and procedure, Penalties.

49 CFR Part 1503

Administrative practice and procedure, Investigations, Law enforcement, Penalties.

Amendments to the Regulations

Accordingly, for the reasons stated in the preamble, DHS is amending 6 CFR part 27, 8 CFR parts 270, 274a, and 280, 19 CFR part 4, 33 CFR part 27, and 49 CFR part 1503 as follows:

Title 6—Domestic Security

PART 27—CHEMICAL FACILITY ANTI–TERRORISM STANDARDS

■ 1. The authority citation for part 27 continues to read as follows:

Authority: 6 U.S.C. 624; Pub. L. 101–410, 104 Stat. 890, as amended by Pub. L. 114–74, 129 Stat. 599; Pub. L. 113–254, 128 Stat. 2898, as amended by Pub. L. 116–150, 134 Stat. 679.

■ 2. In § 27.300, revise paragraph (b)(3) to read as follows:

§ 27.300 Orders.

* * * * *

(b) * * *

(3) Where the Assistant Secretary determines that a facility is in violation of an Order issued pursuant to paragraph (a) of this section and issues an Order Assessing Civil Penalty pursuant to paragraph (b)(1) of this section, a chemical facility is liable to the United States for a civil penalty of not more than $25,000 for each day during which the violation continues, if the violation of the Order occurred on or before November 2, 2015, or $38,139 for each day during which the violation of the Order continues, if the violation occurred after November 2, 2015.

* * * * *

Title 8—Aliens and Nationality

PART 270—PENALTIES FOR DOCUMENT FRAUD

■ 3. The authority citation for part 270 continues to read as follows:

Authority: 8 U.S.C. 1101, 1103, and 1324c; Pub. L. 101–410, 104 Stat. 890, as amended by Pub. L. 104–134, 110 Stat. 1321 and Pub. L. 114–74, 129 Stat. 599.

■ 4. In § 270.3, revise paragraphs (b)(1)(ii)(A) through (D) to read as follows:

§ 270.3 Penalties.

* * * * *

(b) * * *

(1) * * *

(ii) * * *

(A) *First offense under section 274C(a)(1) through (a)(4).* Not less than $275 and not exceeding $2,200 for each fraudulent document or each proscribed activity described in section 274C(a)(1) through (a)(4) of the Act before March 27, 2008; not less than $375 and not exceeding $3,200 for each fraudulent document or each proscribed activity described in section 274C(a)(1) through (a)(4) of the Act on or after March 27, 2008, and on or before November 2, 2015; and not less than $517 and not exceeding $4,144 for each fraudulent document or each proscribed activity described in section 274C(a)(1) through (a)(4) of the Act after November 2, 2015.

(B) *First offense under section 274C(a)(5) or (a)(6).* Not less than $250 and not exceeding $2,000 for each fraudulent document or each proscribed activity described in section 274C(a)(5) or (a)(6) of the Act before March 27, 2008; not less than $275 and not exceeding $2,200 for each fraudulent document or each proscribed activity described in section 274C(a)(5) or (a)(6) of the Act on or after March 27, 2008, and on or before November 2, 2015; and not less than $438 and not exceeding $3,494 for each fraudulent document or each proscribed activity described in section 274C(a)(5) or (a)(6) of the Act after November 2, 2015.

(C) *Subsequent offenses under section 274C(a)(1) through (a)(4).* Not less than $2,200 and not more than $5,500 for each fraudulent document or each proscribed activity described in section 274C(a)(1) through (a)(4) of the Act before March 27, 2008; not less than $3,200 and not exceeding $6,500 for each fraudulent document or each proscribed activity described in section 274C(a)(1) through (a)(4) of the Act occurring on or after March 27, 2008 and on or before November 2, 2015; and not less than $4,144 and not more than $10,360 for each fraudulent document or each proscribed activity described in section 274C(a)(1) through (a)(4) of the Act after November 2, 2015.

(D) *Subsequent offenses under section 274C(a)(5) or (a)(6).* Not less than $2,000 and not more than $5,000 for each fraudulent document or each proscribed activity described in section 274C(a)(5) or (a)(6) of the Act before March 27, 2008; not less than $2,200 and not exceeding $5,500 for each fraudulent document or each proscribed activity described in section 274C(a)(5) or (a)(6) of the Act occurring on or after March 27, 2008, and on or before November 2, 2015; and not less than $3,494 and not more than $8,736 for each fraudulent document or each proscribed activity described in section 274C(a)(5) or (a)(6) of the Act after November 2, 2015.

* * * * *

PART 274a—CONTROL OF EMPLOYMENT OF ALIENS

■ 5. The authority citation for part 274a continues to read as follows:

Authority: 8 U.S.C. 1101, 1103, 1105a, 1324a; 48 U.S.C. 1806; 8 CFR part 2; Pub. L. 101–410, 104 Stat. 890, as amended by Pub. L. 114–74, 129 Stat. 599.

■ 6. In § 274a.8, revise paragraph (b) to read as follows:

§ 274a.8 Prohibition of indemnity bonds.

* * * * *

(b) *Penalty.* Any person or other entity who requires any individual to post a bond or security as stated in this section shall, after notice and opportunity for an administrative hearing in accordance with section 274A(e)(3)(B) of the Act, be subject to a civil monetary penalty of $1,000 for each violation before September 29, 1999, of $1,100 for each violation occurring on or after September 29, 1999, but on or before November 2, 2015, and of $2,507 for each violation occurring after November 2, 2015, and to an administrative order requiring the return to the individual of any amounts received in violation of this section or, if the individual cannot be located, to the general fund of the Treasury.

■ 7. In § 274a.10, revise paragraphs (b)(1)(ii)(A) through (C) and the first sentence of paragraph (b)(2) introductory text to read as follows:

§ 274a.10 Penalties.

* * * * *

(b) * * *

(1) * * *

(ii) * * *

(A) First offense—not less than $275 and not more than $2,200 for each unauthorized alien with respect to whom the offense occurred before March 27, 2008; not less than $375 and not exceeding $3,200, for each unauthorized alien with respect to whom the offense occurred occurring on or after March 27, 2008, and on or before November 2, 2015; and not less than $627 and not more than $5,016 for each unauthorized alien with respect to whom the offense occurred occurring after November 2, 2015;

(B) Second offense—not less than $2,200 and not more than $5,500 for each unauthorized alien with respect to whom the second offense occurred before March 27, 2008; not less than $3,200 and not more than $6,500, for each unauthorized alien with respect to whom the second offense occurred on or after March 27, 2008, and on or before November 2, 2015; and not less than $5,016 and not more than $12,537 for each unauthorized alien with respect to

whom the second offense occurred after November 2, 2015; or

(C) More than two offenses—not less than $3,300 and not more than $11,000 for each unauthorized alien with respect to whom the third or subsequent offense occurred before March 27, 2008; not less than $4,300 and not exceeding $16,000, for each unauthorized alien with respect to whom the third or subsequent offense occurred on or after March 27, 2008, and on or before November 2, 2015; and not less than $7,523 and not more than $25,076 for each unauthorized alien with respect to whom the third or subsequent offense occurred after November 2, 2015; and

* * * * *

(2) A respondent determined by the Service (if a respondent fails to request a hearing) or by an administrative law judge, to have failed to comply with the employment verification requirements as set forth in § 274a.2(b), shall be subject to a civil penalty in an amount of not less than $100 and not more than $1,000 for each individual with respect to whom such violation occurred before September 29, 1999; not less than $110 and not more than $1,100 for each individual with respect to whom such violation occurred on or after September 29, 1999, and on or before November 2, 2015; and not less than $252 and not more than $2,507 for each individual with respect to whom such violation occurred after November 2, 2015. * * *

* * * * *

PART 280—IMPOSITION AND COLLECTION OF FINES

■ 8. The authority citation for part 280 continues to read as follows:

Authority: 8 U.S.C. 1103, 1221, 1223, 1227, 1229, 1253, 1281, 1283, 1284, 1285, 1286, 1322, 1323, 1330; 66 Stat. 173, 195, 197, 201, 203, 212, 219, 221–223, 226, 227, 230; Pub. L. 101–410, 104 Stat. 890, as amended by Pub. L. 114–74, 129 Stat. 599.

■ 9. In § 280.53, revise paragraphs (b)(1) through (15) to read as follows:

§ 280.53 Civil monetary penalties inflation adjustment.

* * * * *

(b) * * *

(1) Section 231(g) of the Act, penalties for non-compliance with arrival and departure manifest requirements for passengers, crewmembers, or occupants transported on commercial vessels or aircraft arriving to or departing from the United States: From $1,436 to $1,525.

(2) Section 234 of the Act, penalties for non-compliance with landing requirements at designated ports of entry for aircraft transporting aliens: From $3,901 to $4,144.

(3) Section 240B(d) of the Act, penalties for failure to depart voluntarily: From $1,644 minimum/$8,224 maximum to $1,746 minimum/$8,736 maximum.

(4) Section 243(c)(1)(A) of the Act, penalties for violations of removal orders relating to aliens transported on vessels or aircraft, under section 241(d) of the Act, or for costs associated with removal under section 241(e) of the Act: From $3,289 to $3,494.

(5) Penalties for failure to remove alien stowaways under section 241(d)(2) of the Act: From $8,224 to $8,736.

(6) Section 251(d) of the Act, penalties for failure to report an illegal landing or desertion of alien crewmen, and for each alien not reported on arrival or departure manifest or lists required in accordance with section 251 of the Act: From $390 to $414; and penalties for use of alien crewmen for longshore work in violation of section 251(d) of the Act: From $9,753 to $10,360.

(7) Section 254(a) of the Act, penalties for failure to control, detain, or remove alien crewmen: From $975 minimum/$5,851 maximum to $1,036 minimum/$6,215 maximum.

(8) Section 255 of the Act, penalties for employment on passenger vessels of aliens afflicted with certain disabilities: From $1,951 to $2,072.

(9) Section 256 of the Act, penalties for discharge of alien crewmen: From $2,925 minimum/$5,851 maximum to $3,107 minimum/$6,215 maximum.

(10) Section 257 of the Act, penalties for bringing into the United States alien crewmen with intent to evade immigration laws: From $19,505 maximum to $20,719 maximum.

(11) Section 271(a) of the Act, penalties for failure to prevent the unauthorized landing of aliens: From $5,851 to $6,215.

(12) Section 272(a) of the Act, penalties for bringing to the United States aliens subject to denial of admission on a health-related ground: From $5,851 to $6,215.

(13) Section 273(b) of the Act, penalties for bringing to the United States aliens without required documentation: From $5,851 to $6,215.

(14) Section 274D of the Act, penalties for failure to depart: From $823 maximum to $874 maximum, for each day the alien is in violation.

(15) Section 275(b) of the Act, penalties for improper entry: From $82 minimum/$412 maximum to $87 minimum/$438 maximum, for each entry or attempted entry.

Title 19—Customs Duties

PART 4—VESSELS IN FOREIGN AND DOMESTIC TRADES

■ 10. The authority citation for part 4 continues to read in part as follows:

Authority: 5 U.S.C. 301; 19 U.S.C. 66, 1415, 1431, 1433, 1434, 1624, 2071 note; 46 U.S.C. 501, 60105.

* * * * *

Sections 4.80, 4.80a, and 4.80b also issued under 19 U.S.C. 1706a; 28 U.S.C. 2461 note; 46 U.S.C. 12112, 12117, 12118, 50501–55106, 55107, 55108, 55110, 55114, 55115, 55116, 55117, 55119, 56101, 55121, 56101, 57109; Pub. L. 108–7, Division B, Title II, § 211;

* * * * *

Section 4.92 also issued under 28 U.S.C. 2461 note; 46 U.S.C. 55111;

* * * * *

■ 11. In § 4.80, revise paragraphs (b)(2) and (i) to read as follows:

§ 4.80 Vessels entitled to engage in coastwise trade.

* * * * *

(b) * * *

(2) The penalty imposed for the unlawful transportation of passengers between coastwise points is $300 for each passenger so transported and landed on or before November 2, 2015, and $873 for each passenger so transported and landed after November 2, 2015 (46 U.S.C. 55103, as adjusted by the Federal Civil Penalties Inflation Adjustment Act Improvements Act of 2015).

* * * * *

(i) Any vessel, entitled to be documented and not so documented, employed in a trade for which a Certificate of Documentation is issued under the vessel documentation laws (see § 4.0(c)), other than a trade covered by a registry, is liable to a civil penalty of $500 for each port at which it arrives without the proper Certificate of Documentation on or before November 2, 2015, and $1,453 for each port at which it arrives without the proper Certificate of Documentation after November 2, 2015 (19 U.S.C. 1706a, as adjusted by the Federal Civil Penalties Inflation Adjustment Act Improvements Act of 2015). If such a vessel has on board any foreign merchandise (sea stores excepted), or any domestic taxable alcoholic beverages, on which the duty and taxes have not been paid or secured to be paid, the vessel and its cargo are subject to seizure and forfeiture.

■ 12. In § 4.92, revise the third sentence to read as follows:

§ 4.92 Towing.

* * * The penalties for violation of this section occurring after November 2, 2015, are a fine of from $1,017 to $3,198 against the owner or master of the towing vessel and a further penalty against the towing vessel of $174 per ton of the towed vessel (46 U.S.C. 55111, as adjusted by the Federal Civil Penalties Inflation Adjustment Act Improvements Act of 2015).

Title 33—Navigation and Navigable Waters

PART 27—ADJUSTMENT OF CIVIL MONETARY PENALTIES FOR INFLATION

■ 13. The authority citation for part 27 continues to read as follows:

Authority: Secs. 1–6, Pub. L. 101–410, 104 Stat. 890, as amended by Sec. 31001(s)(1), Pub. L. 104–134, 110 Stat. 1321 (28 U.S.C. 2461 note); Department of Homeland Security Delegation No. 0170.1, sec. 2 (106).

■ 14. In § 27.3, revise the third sentence of the introductory text and table 1 to read as follows:

§ 27.3 Penalty adjustment table.

* * * The adjusted civil penalty amounts listed in Table 1 to this section are applicable for penalty assessments issued after January 11, 2022, with respect to violations occurring after November 2, 2015. * * *

TABLE 1 TO § 27.3—CIVIL MONETARY PENALTY INFLATION ADJUSTMENTS

U.S. code citation	Civil monetary penalty description	2022 Adjusted maximum penalty amount ($)
14 U.S.C. 521(c)	Saving Life and Property	11,649
14 U.S.C. 521(e)	Saving Life and Property; Intentional Interference with Broadcast	1,195
14 U.S.C. 936(i)	Confidentiality of Medical Quality Assurance Records (first offense)	5,851
14 U.S.C. 936(i)	Confidentiality of Medical Quality Assurance Records (subsequent offenses)	39,011
19 U.S.C. 70	Obstruction of Revenue Officers by Masters of Vessels	8,723
19 U.S.C. 70	Obstruction of Revenue Officers by Masters of Vessels—Minimum Penalty	2,035
19 U.S.C. 1581(d)	Failure to Stop Vessel When Directed; Master, Owner, Operator or Person in Charge [1]	5,000
19 U.S.C. 1581(d)	Failure to Stop Vessel When Directed; Master, Owner, Operator or Person in Charge—Minimum Penalty [1].	1,000
33 U.S.C. 471	Anchorage Ground/Harbor Regulations General	12,647
33 U.S.C. 474	Anchorage Ground/Harbor Regulations St. Mary's River	873
33 U.S.C. 495(b)	Bridges/Failure to Comply with Regulations	31,928
33 U.S.C. 499(c)	Bridges/Drawbridges	31,928
33 U.S.C. 502(c)	Bridges/Failure to Alter Bridge Obstructing Navigation	31,928
33 U.S.C. 533(b)	Bridges/Maintenance and Operation	31,928
33 U.S.C. 1208(a)	Bridge to Bridge Communication; Master, Person in Charge or Pilot	2,326
33 U.S.C. 1208(b)	Bridge to Bridge Communication; Vessel	2,326
33 U.S.C. 1321(b)(6)(B)(i)	Oil/Hazardous Substances: Discharges (Class I per violation)	20,719
33 U.S.C. 1321(b)(6)(B)(i)	Oil/Hazardous Substances: Discharges (Class I total under paragraph)	51,796
33 U.S.C. 1321(b)(6)(B)(ii)	Oil/Hazardous Substances: Discharges (Class II per day of violation)	20,719
33 U.S.C. 1321(b)(6)(B)(ii)	Oil/Hazardous Substances: Discharges (Class II total under paragraph)	258,978
33 U.S.C. 1321(b)(7)(A)	Oil/Hazardous Substances: Discharges (per day of violation) Judicial Assessment	51,796
33 U.S.C. 1321(b)(7)(A)	Oil/Hazardous Substances: Discharges (per barrel of oil or unit discharged) Judicial Assessment.	2,072
33 U.S.C. 1321(b)(7)(B)	Oil/Hazardous Substances: Failure to Carry Out Removal/Comply With Order (Judicial Assessment).	51,796
33 U.S.C. 1321(b)(7)(C)	Oil/Hazardous Substances: Failure to Comply with Regulation Issued Under 1321(j) (Judicial Assessment).	51,796
33 U.S.C. 1321(b)(7)(D)	Oil/Hazardous Substances: Discharges, Gross Negligence (per barrel of oil or unit discharged) Judicial Assessment.	6,215
33 U.S.C. 1321(b)(7)(D)	Oil/Hazardous Substances: Discharges, Gross Negligence—Minimum Penalty (Judicial Assessment).	207,183
33 U.S.C. 1322(j)	Marine Sanitation Devices; Operating	8,723
33 U.S.C. 1322(j)	Marine Sanitation Devices; Sale or Manufacture	23,258
33 U.S.C. 1608(a)	International Navigation Rules; Operator	16,307
33 U.S.C. 1608(b)	International Navigation Rules; Vessel	16,307
33 U.S.C. 1908(b)(1)	Pollution from Ships; General	81,540
33 U.S.C. 1908(b)(2)	Pollution from Ships; False Statement	16,307
33 U.S.C. 2072(a)	Inland Navigation Rules; Operator	16,307
33 U.S.C. 2072(b)	Inland Navigation Rules; Vessel	16,307
33 U.S.C. 2609(a)	Shore Protection; General	57,527
33 U.S.C. 2609(b)	Shore Protection; Operating Without Permit	23,011
33 U.S.C. 2716a(a)	Oil Pollution Liability and Compensation	51,796
33 U.S.C. 3852(a)(1)(A)	Clean Hulls; Civil Enforcement	47,424
33 U.S.C. 3852(a)(1)(A)	Clean Hulls; related to false statements	63,232
33 U.S.C. 3852(c)	Clean Hulls; Recreational Vessels	6,323
42 U.S.C. 9609(a)	Hazardous Substances, Releases, Liability, Compensation (Class I)	62,689
42 U.S.C. 9609(b)	Hazardous Substances, Releases, Liability, Compensation (Class II)	62,689
42 U.S.C. 9609(b)	Hazardous Substances, Releases, Liability, Compensation (Class II subsequent offense).	188,069
42 U.S.C. 9609(c)	Hazardous Substances, Releases, Liability, Compensation (Judicial Assessment)	62,689
42 U.S.C. 9609(c)	Hazardous Substances, Releases, Liability, Compensation (Judicial Assessment subsequent offense).	188,069
46 U.S.C. 80509(a)	Safe Containers for International Cargo	6,852
46 U.S.C. 70305(c)	Suspension of Passenger Service	68,529

TABLE 1 TO § 27.3—CIVIL MONETARY PENALTY INFLATION ADJUSTMENTS—Continued

U.S. code citation	Civil monetary penalty description	2022 Adjusted maximum penalty amount ($)
46 U.S.C. 2110(e)	Vessel Inspection or Examination Fees	10,360
46 U.S.C. 2115	Alcohol and Dangerous Drug Testing	8,433
46 U.S.C. 2302(a)	Negligent Operations: Recreational Vessels	7,628
46 U.S.C. 2302(a)	Negligent Operations: Other Vessels	38,139
46 U.S.C. 2302(c)(1)	Operating a Vessel While Under the Influence of Alcohol or a Dangerous Drug	8,433
46 U.S.C. 2306(a)(4)	Vessel Reporting Requirements: Owner, Charterer, Managing Operator, or Agent	13,132
46 U.S.C. 2306(b)(2)	Vessel Reporting Requirements: Master	2,627
46 U.S.C. 3102(c)(1)	Immersion Suits	13,132
46 U.S.C. 3302(i)(5)	Inspection Permit	2,739
46 U.S.C. 3318(a)	Vessel Inspection; General	13,132
46 U.S.C. 3318(g)	Vessel Inspection; Nautical School Vessel	13,132
46 U.S.C. 3318(h)	Vessel Inspection; Failure to Give Notice in accordance with (IAW) 3304(b)	2,627
46 U.S.C. 3318(i)	Vessel Inspection; Failure to Give Notice IAW 3309(c)	2,627
46 U.S.C. 3318(j)(1)	Vessel Inspection; Vessel ≥1,600 Gross Tons	26,269
46 U.S.C. 3318(j)(1)	Vessel Inspection; Vessel <1,600 Gross Tons (GT)	5,254
46 U.S.C. 3318(k)	Vessel Inspection; Failure to Comply with 3311(b)	26,269
46 U.S.C. 3318(l)	Vessel Inspection; Violation of 3318(b)–3318(f)	13,132
46 U.S.C. 3502(e)	List/count of Passengers	273
46 U.S.C. 3504(c)	Notification to Passengers	27,384
46 U.S.C. 3504(c)	Notification to Passengers; Sale of Tickets	1,368
46 U.S.C. 3506	Copies of Laws on Passenger Vessels; Master	548
46 U.S.C. 3718(a)(1)	Liquid Bulk/Dangerous Cargo	68,462
46 U.S.C. 4106	Uninspected Vessels	11,506
46 U.S.C. 4311(b)(1)	Recreational Vessels (maximum for related series of violations)	362,217
46 U.S.C. 4311(b)(1)	Recreational Vessels; Violation of 4307(a)	7,244
46 U.S.C. 4311(c)	Recreational Vessels	2,739
46 U.S.C. 4507	Uninspected Commercial Fishing Industry Vessels	11,506
46 U.S.C. 4703	Abandonment of Barges	1,949
46 U.S.C. 5116(a)	Load Lines	12,537
46 U.S.C. 5116(b)	Load Lines; Violation of 5112(a)	25,076
46 U.S.C. 5116(c)	Load Lines; Violation of 5112(b)	12,537
46 U.S.C. 6103(a)	Reporting Marine Casualties	43,678
46 U.S.C. 6103(b)	Reporting Marine Casualties; Violation of 6104	11,506
46 U.S.C. 8101(e)	Manning of Inspected Vessels; Failure to Report Deficiency in Vessel Complement	2,072
46 U.S.C. 8101(f)	Manning of Inspected Vessels	20,719
46 U.S.C. 8101(g)	Manning of Inspected Vessels; Employing or Serving in Capacity not Licensed by U.S. Coast Guard (USCG).	20,719
46 U.S.C. 8101(h)	Manning of Inspected Vessels; Freight Vessel <100 GT, Small Passenger Vessel, or Sailing School Vessel.	2,739
46 U.S.C. 8102(a)	Watchmen on Passenger Vessels	2,739
46 U.S.C. 8103(f)	Citizenship Requirements	1,368
46 U.S.C. 8104(i)	Watches on Vessels; Violation of 8104(a) or (b)	20,719
46 U.S.C. 8104(j)	Watches on Vessels; Violation of 8104(c), (d), (e), or (h)	20,719
46 U.S.C. 8302(e)	Staff Department on Vessels	273
46 U.S.C. 8304(d)	Officer's Competency Certificates	273
46 U.S.C. 8502(e)	Coastwise Pilotage; Owner, Charterer, Managing Operator, Agent, Master or Individual in Charge.	20,719
46 U.S.C. 8502(f)	Coastwise Pilotage; Individual	20,719
46 U.S.C. 8503	Federal Pilots	65,666
46 U.S.C. 8701(d)	Merchant Mariners Documents	1,368
46 U.S.C. 8702(e)	Crew Requirements	20,719
46 U.S.C. 8906	Small Vessel Manning	43,678
46 U.S.C. 9308(a)	Pilotage: Great Lakes; Owner, Charterer, Managing Operator, Agent, Master or Individual in Charge.	20,719
46 U.S.C. 9308(b)	Pilotage: Great Lakes; Individual	20,719
46 U.S.C. 9308(c)	Pilotage: Great Lakes; Violation of 9303	20,719
46 U.S.C. 10104(b)	Failure to Report Sexual Offense	11,011
46 U.S.C. 10314(a)(2)	Pay Advances to Seamen	1,368
46 U.S.C. 10314(b)	Pay Advances to Seamen; Remuneration for Employment	1,368
46 U.S.C. 10315(c)	Allotment to Seamen	1,368
46 U.S.C. 10321	Seamen Protection; General	9,491
46 U.S.C. 10505(a)(2)	Coastwise Voyages: Advances	9,491
46 U.S.C. 10505(b)	Coastwise Voyages: Advances; Remuneration for Employment	9,491
46 U.S.C. 10508(b)	Coastwise Voyages: Seamen Protection; General	9,491
46 U.S.C. 10711	Effects of Deceased Seamen	548
46 U.S.C. 10902(a)(2)	Complaints of Unfitness	1,368
46 U.S.C. 10903(d)	Proceedings on Examination of Vessel	273
46 U.S.C. 10907(b)	Permission to Make Complaint	1,368
46 U.S.C. 11101(f)	Accommodations for Seamen	1,368
46 U.S.C. 11102(b)	Medicine Chests on Vessels	1,368

TABLE 1 TO § 27.3—CIVIL MONETARY PENALTY INFLATION ADJUSTMENTS—Continued

U.S. code citation	Civil monetary penalty description	2022 Adjusted maximum penalty amount ($)
46 U.S.C. 11104(b)	Destitute Seamen	273
46 U.S.C. 11105(c)	Wages on Discharge	1,368
46 U.S.C. 11303(a)	Log Books; Master Failing to Maintain	548
46 U.S.C. 11303(b)	Log Books; Master Failing to Make Entry	548
46 U.S.C. 11303(c)	Log Books; Late Entry	411
46 U.S.C. 11506	Carrying of Sheath Knives	137
46 U.S.C. 12151(a)(1)	Vessel Documentation	17,935
46 U.S.C. 12151(a)(2)	Documentation of Vessels—Related to activities involving mobile offshore drilling units	29,893
46 U.S.C. 12151(c)	Vessel Documentation; Fishery Endorsement	137,060
46 U.S.C. 12309(a)	Numbering of Undocumented Vessels—Willful violation	13,693
46 U.S.C. 12309(b)	Numbering of Undocumented Vessels	2,739
46 U.S.C. 12507(b)	Vessel Identification System	23,011
46 U.S.C. 14701	Measurement of Vessels	50,154
46 U.S.C. 14702	Measurement; False Statements	50,154
46 U.S.C. 31309	Commercial Instruments and Maritime Liens	23,011
46 U.S.C. 31330(a)(2)	Commercial Instruments and Maritime Liens; Mortgagor	23,011
46 U.S.C. 31330(b)(2)	Commercial Instruments and Maritime Liens; Violation of 31329	57,527
46 U.S.C. 70036(a)	Ports and Waterways Safety Regulations	103,050
46 U.S.C. 70041(d)(1)(B)	Vessel Navigation: Regattas or Marine Parades; Unlicensed Person in Charge	10,360
46 U.S.C. 70041(d)(1)(C)	Vessel Navigation: Regattas or Marine Parades; Owner Onboard Vessel	10,360
46 U.S.C. 70041(d)(1)(D)	Vessel Navigation: Regattas or Marine Parades; Other Persons	5,179
46 U.S.C. 70119(a)	Port Security	38,139
46 U.S.C. 70119(b)	Port Security—Continuing Violations	68,529
46 U.S.C. 70506	Maritime Drug Law Enforcement; Penalties	6,323
49 U.S.C. 5123(a)(1)	Hazardous Materials: Related to Vessels—Maximum Penalty	89,678
49 U.S.C. 5123(a)(2)	Hazardous Materials: Related to Vessels—Penalty from Fatalities, Serious Injuries/Illness or Substantial Damage to Property.	209,249
49 U.S.C. 5123(a)(3)	Hazardous Materials: Related to Vessels—Training	540

[1] Enacted under the Tariff Act of 1930 exempt from inflation adjustments.

Title 49—Transportation

PART 1503—INVESTIGATIVE AND ENFORCEMENT PROCEDURES

■ 15. The authority citation for part 1503 continues to read as follows:

Authority: 6 U.S.C. 1142; 18 U.S.C. 6002; 28 U.S.C. 2461 (note); 49 U.S.C. 114, 20109, 31105, 40113–40114, 40119, 44901–44907, 46101–46107, 46109–46110, 46301, 46305, 46311, 46313–46314; Pub. L. 104–134, as amended by Pub. L. 114–74.

■ 16. In § 1503.401, revise paragraphs (b)(1) and (2) and (c)(1), (2), and (3) to read as follows:

§ 1503.401 Maximum penalty amounts.

* * * * *

(b) * * *

(1) For violations that occurred on or before November 2, 2015, $10,000 per violation, up to a total of $50,000 per civil penalty action, in the case of an individual or small business concern (''small business concern'' as defined in section 3 of the Small Business Act (15 U.S.C. 632)). For violations that occurred after November 2, 2015, $12,794 per violation, up to a total of $63,973 per civil penalty action, in the case of an individual or small business concern; and

(2) For violations that occurred on or before November 2, 2015, $10,000 per violation, up to a total of $400,000 per civil penalty action, in the case of any other person. For violations that occurred after November 2, 2015, $12,794 per violation, up to a total of $511,780 per civil penalty action, in the case of any other person.

(c) * * *

(1) For violations that occurred on or before November 2, 2015, $10,000 per violation, up to a total of $50,000 per civil penalty action, in the case of an individual or small business concern (''small business concern'' as defined in section 3 of the Small Business Act (15 U.S.C. 632)). For violations that occurred after November 2, 2015, $14,950 per violation, up to a total of $74,754 per civil penalty action, in the case of an individual (except an airman serving as an airman), or a small business concern.

(2) For violations that occurred on or before November 2, 2015, $10,000 per violation, up to a total of $400,000 per civil penalty action, in the case of any other person (except an airman serving as an airman) not operating an aircraft for the transportation of passengers or property for compensation. For violations that occurred after November 2, 2015, $14,950 per violation, up to a total of $598,026 per civil penalty action, in the case of any other person (except an airman serving as an airman) not operating an aircraft for the transportation of passengers or property for compensation.

(3) For violations that occurred on or before November 2, 2015, $25,000 per violation, up to a total of $400,000 per civil penalty action, in the case of a person operating an aircraft for the transportation of passengers or property for compensation (except an individual serving as an airman). For violations that occurred after November 2, 2015, $37,377 per violation, up to a total of $598,026 per civil penalty action, in the case of a person (except an individual serving as an airman) operating an aircraft for the transportation of passengers or property for compensation.

Jonathan E. Meyer,

General Counsel, U.S. Department of Homeland Security.

[FR Doc. 2022–00105 Filed 1–10–22; 8:45 am]

BILLING CODE 9110–9P–P, 9111–14–P, 9111–28–P, 9110–04–P, 9110–05–P

FARM CREDIT ADMINISTRATION

12 CFR Part 622

RIN 3052–AD49

Rules of Practice and Procedure; Adjusting Civil Money Penalties for Inflation

AGENCY: Farm Credit Administration.

ACTION: Final rule.

SUMMARY: This regulation implements inflation adjustments to civil money penalties (CMPs) that the Farm Credit Administration (FCA) may impose or enforce pursuant to the Farm Credit Act of 1971, as amended (Farm Credit Act), and pursuant to the Flood Disaster Protection Act of 1973, as amended by the National Flood Insurance Reform Act of 1994, and further amended by the Biggert-Waters Flood Insurance Reform Act of 2012 (Biggert-Waters Act) (collectively FDPA, as amended).

DATES: *Effective date:* This regulation is effective on January 15, 2022.

FOR FURTHER INFORMATION CONTACT: Brian Camp, Accountant, Office of Regulatory Policy, Farm Credit Administration, (703) 254–3004, TTY (703) 883–4056,

Or

Heather LoPresti, Senior Counsel, Office of General Counsel, Farm Credit Administration, (703) 883–4318, TTY (703) 883–4056.

SUPPLEMENTARY INFORMATION:

I. Objective

The objective of this regulation is to adjust the maximum CMPs for inflation through a final rulemaking to retain the deterrent effect of such penalties.

II. Background

A. Introduction

The Federal Civil Penalties Inflation Adjustment Act of 1990, as amended by the Debt Collection Improvement Act of 1996 (1996 Act) and the Federal Civil Penalties Inflation Adjustment Act Improvements Act of 2015 (2015 Act) (collectively, 1990 Act, as amended), requires all Federal agencies with the authority to enforce CMPs to evaluate and adjust, if necessary, those CMPs each year to ensure that they continue to maintain their deterrent value and promote compliance with the law. Section 3(2) of the 1990 Act, as amended, defines a civil monetary penalty [1] as any penalty, fine, or other sanction that: (1) Either is for a specific monetary amount as provided by Federal law or has a maximum amount provided for by Federal law; (2) is assessed or enforced by an agency pursuant to Federal law; and (3) is assessed or enforced pursuant to an administrative proceeding or a civil action in the Federal courts.[2]

The FCA imposes and enforces CMPs through the Farm Credit Act [3] and the FDPA, as amended.[4] FCA's regulations governing CMPs are found in 12 CFR parts 622 and 623. Part 622 establishes rules of practice and procedure applicable to formal and informal hearings held before the FCA, and to formal investigations conducted under the Farm Credit Act. Part 623 prescribes rules regarding persons who may practice before the FCA and the circumstances under which such persons may be suspended or debarred from practice before the FCA.

B. CMPs Issued Under the Farm Credit Act

The Farm Credit Act provides that any Farm Credit System (System) institution or any officer, director, employee, agent, or other person participating in the conduct of the affairs of a System institution who violates the terms of a cease-and-desist order that has become final pursuant to section 5.25 or 5.26 of the Farm Credit Act must pay a maximum daily amount of $1,000,[5] for each day such violation continues. This CMP maximum was set by the Farm Credit Amendments Act of 1985, which amended the Farm Credit Act. Orders issued by the FCA under section 5.25 or 5.26 of the Farm Credit Act include temporary and permanent cease-and-desist orders. In addition, section 5.32(h) of the Farm Credit Act provides that any directive issued under sections 4.3(b)(2), 4.3A(e), or 4.14A(i) of the Farm Credit Act ''shall be treated'' as a final order issued under section 5.25 of the Farm Credit Act for purposes of assessing a CMP.

Section 5.32(a) of the Farm Credit Act also states that ''[a]ny such institution or person who violates any provision of the [Farm Credit] Act or any regulation issued under this Act shall forfeit and pay a civil penalty of not more than $500 [6] per day for each day during which such violation continues.'' This CMP maximum was set by the Agricultural Credit Act of 1987, which was enacted in 1988, and amends the Farm Credit Act. Current inflation-adjusted CMP maximums are set forth in existing § 622.61 of FCA regulations.[7]

The FCA also enforces the FDPA, as amended, which requires FCA to assess CMPs for a pattern or practice of committing certain specific actions in violation of the National Flood Insurance Program. The existing maximum CMP for a violation under the Flood Disaster Protection Act of 1973 is $2,000.[8] [9]

C. Federal Civil Penalties Inflation Adjustment Act Improvements Act of 2015

1. In General

The 2015 Act required all Federal agencies to adjust the CMPs yearly, starting January 15, 2017.

Under Section 4(b) of the 1990 Act, as amended, annual adjustments are to be made no later than January 15.[10] Section 6 of the 1990 Act, as amended, states that any increase to a civil monetary penalty under this 1990 Act applies only to civil monetary penalties, including instances in which an associated violation predated the annual increase, which are assessed after the date the increase takes effect.

Section 5(b) of the 1990 Act, as amended, defines the term ''cost-of-living adjustment'' as the percentage (if any) for each civil monetary penalty by which (1) the Consumer Price Index (CPI) for the month of October of the calendar year preceding the adjustment, exceeds (2) the CPI for the month of October one year before the month of October referred to in (1) of the calendar year in which the amount of such civil monetary penalty was last set or adjusted pursuant to law.[11]

The increase for each CMP adjusted for inflation must be rounded using a method prescribed by section 5(a) of the

[1] *Note:* While the 1990 Act, as amended by 1996 and 2015 Acts, uses the term ''civil monetary penalties'' for these penalties or other sanctions, the Farm Credit Act and the FCA Regulations use the term ''civil money penalties.'' Both terms have the same meaning. Accordingly, this rule uses the term civil money penalty, and both terms may be used interchangeably.

[2] *See* 28 U.S.C. 2461 *note.*

[3] Public Law 92–181, as amended.

[4] 42 U.S.C. 4012a and Public Law 103–325, title V, 108 Stat. 2160, 2255–87 (September 23, 1994).

[5] The inflation-adjusted CMP in effect on January 15, 2021, for a violation of a final order is $2,395 per day, as set forth in § 622.61(a)(1) of FCA regulations.

[6] The inflation-adjusted CMP in effect on January 15, 2021, for a violation of the Farm Credit Act or a regulation issued under the Farm Credit Act is $1,084 per day for each violation, as set forth in § 622.61(a)(2) of FCA regulations.

[7] Prior adjustments were made under the 1990 Act and continue to be made each year.

[8] Public Law 112–141, 126 Stat. 405 (July 6, 2012).

[9] The inflation-adjusted CMP in effect on January 15, 2021, for a flood insurance violation is $2,252, as set forth in § 622.61(b)of FCA regulations.

[10] Public Law 114–74, sec. 701(b)(1).

[11] The CPI is published by the Department of Labor, Bureau of Statistics, and is available at its website: *https://www.bls.gov/cpi/.*

1990 Act, as amended, by the 2015 Act.[12]

2. Other Adjustments

If a civil monetary penalty is subject to a cost-of-living adjustment under the 1990 Act, as amended, but is adjusted to an amount greater than the amount of the adjustment required under the Act within the 12 months preceding a required cost-of-living adjustment, the agency is not required to make the cost-of-living adjustment to that CMP in that calendar year.[13]

III. Yearly Adjustments

A. Mathematical Calculations of 2022 Adjustments

The adjustment requirement affects two provisions of section 5.32(a) of the Farm Credit Act. For the 2022 yearly adjustments to the CMPs set forth by the Farm Credit Act, the calculation required by the 2021 White House Office of Management and Budget (OMB) guidance [14] is based on the percentage by which the CPI for October 2021 exceeds the CPI for October 2020. The OMB set forth guidance, as required by the 2015 Act,[15] with a multiplier for calculating the new CMP values.[16] The 2021 OMB multiplier for the 2022 CMPs is 1.06222.

The adjustment also affects the CMPs set by the Flood Disaster Protection Act of 1973, as amended. The adjustment multiplier is the same for all FCA enforced CMPs, set at 1.06222. The maximum CMPs for violations were created in 2012 by the Biggert-Waters Act, which amended the Flood Disaster Protection Act of 1973.

1. New Penalty Amount in § 622.61(a)(1)

The inflation-adjusted CMP currently in effect for violations of a final order occurring on or after January 15, 2021, is a maximum daily amount of $2,395.[17] Multiplying the $2,395 CMP by the 2021 OMB multiplier, 1.06222, yields a total of $2,544.02. When that number is rounded as required by section 5(a) of the 1990 Act, as amended, the inflation-adjusted maximum increases to $2,544. Thus, the new CMP maximum is $2,544, for violations that occur on or after January 15, 2022.

2. New Penalty Amount in § 622.61(a)(2)

The inflation-adjusted CMP currently in effect for violations of the Farm Credit Act or regulations issued under the Farm Credit Act occurring on or after January 15, 2021, is a maximum daily amount of $1,084.[18] Multiplying the $1,084 CMP maximum by the 2021 OMB multiplier, 1.06222, yields a total of $1,151.45. When that number is rounded as required by section 5(a) of the 1990 Act, as amended the inflation-adjusted maximum increases to $1,151. Thus, the new CMP maximum is $1,151, for violations that occur on or after January 15, 2022.

3. New Penalty Amounts for Flood Insurance Violations Under § 622.61(b)

The existing maximum CMP for a pattern or practice of flood insurance violations pursuant to 42 U.S.C. 4012a(f)(5) occurring on or after January 15, 2021, is $2,252. Multiplying $2,252 by the 2021 OMB multiplier, 1.06222, yields a total of $2,392.12. When that number is rounded as required by section 5(a) of the 1990 Act, as amended, the new maximum assessment of the CMP for violating 42 U.S.C. 4012a(f)(5) is $2,392. Thus, the new CMP maximum is $2,392, for violations that occur on or after January 15, 2022.

IV. Notice and Comment Not Required by Administrative Procedure Act

The 1990 Act, as amended, gives Federal agencies no discretion in the adjustment of CMPs for the rate of inflation. Further, these revisions are ministerial, technical, and noncontroversial. For these reasons, the FCA finds good cause to determine that public notice and an opportunity to comment are impracticable, unnecessary, and contrary to the public interest pursuant to the Administrative Procedure Act, 5 U.S.C. 553(b)(B), and adopts this rule in final form.

V. Regulatory Flexibility Act

Pursuant to section 605(b) of the Regulatory Flexibility Act (5 U.S.C. 601 *et seq.*), the FCA hereby certifies that this final rule will not have a significant economic impact on a substantial number of small entities. Each of the banks in the System, considered together with its affiliated associations, has assets and annual income in excess of the amounts that would qualify them as small entities. Therefore, System institutions are not ''small entities'' as defined in the Regulatory Flexibility Act.

List of Subjects in 12 CFR Part 622

Administrative practice and procedure, Crime, Investigations, Penalties.

For the reasons stated in the preamble, part 622 of chapter VI, title 12 of the Code of Federal Regulations is amended as follows:

PART 622—RULES OF PRACTICE AND PROCEDURE

■ 1. The authority citation for part 622 continues to read as follows:

Authority: Secs. 5.9, 5.10, 5.17, 5.25–5.37 of the Farm Credit Act (12 U.S.C. 2243, 2244, 2252, 2261–2273); 28 U.S.C. 2461 note; and 42 U.S.C. 4012a(f).

■ 2. Revise § 622.61 to read as follows:

§ 622.61 Adjustment of civil money penalties by the rate of inflation under the Federal Civil Penalties Inflation Adjustment Act of 1990, as amended.

(a) The maximum amount of each civil money penalty within FCA's jurisdiction is adjusted in accordance with the Federal Civil Penalties Inflation Adjustment Act of 1990, as amended (28 U.S.C. 2461 *note*), as follows:

(1) Amount of civil money penalty imposed under section 5.32 of the Act for violation of a final order issued under section 5.25 or 5.26 of the Act: The maximum daily amount is $2,544 for violations that occur on or after January 15, 2022.

(2) Amount of civil money penalty for violation of the Act or regulations: The maximum daily amount is $1,151 for each violation that occurs on or after January 15, 2022.

(b) The maximum civil money penalty amount assessed under 42 U.S.C. 4012a(f) is $2,392 for each violation that occurs on or after January 15, 2022, with no cap on the total amount of penalties that can be assessed against any single institution during any calendar year.

Dated: January 6, 2022.

Ashley Waldron,

Secretary, Farm Credit Administration Board.

[FR Doc. 2022–00307 Filed 1–10–22; 8:45 am]

BILLING CODE 6705–01–P

[12] Pursuant to section 5(a)(3) of the 2015 Act, any increase determined under the subsection shall be rounded to the nearest $1.

[13] Pursuant to section 4(d) of the 1990 Act, as amended.

[14] OMB Circular M–22–07, Implementation of Penalty Inflation Adjustments for 2022, Pursuant to the Federal Civil Penalties Inflation Adjustment Act Improvements Act of 2015.

[15] 28 U.S.C. 2461 *note,* section 7(a).

[16] OMB Circular M–22–07, Implementation of Penalty Inflation Adjustments for 2022, Pursuant to the Federal Civil Penalties Inflation Adjustment Act Improvements Act of 2015.

[17] 12 CFR 622.61(a)(1).

[18] 12 CFR 622.61(a)(2).

DEPARTMENT OF TRANSPORTATION

Federal Aviation Administration

14 CFR Part 39

[Docket No. FAA–2021–0621; Project Identifier MCAI–2020–01517–T; Amendment 39–21849; AD 2021–25–06]

RIN 2120–AA64

Airworthiness Directives; Airbus Defense and Space S.A. (Formerly Known as Construcciones Aeronauticas, S.A.) Airplanes

AGENCY: Federal Aviation Administration (FAA), Department of Transportation (DOT).

ACTION: Final rule.

SUMMARY: The FAA is superseding Airworthiness Directive (AD) 2018–25–16, which applied to certain Airbus Defense and Space S.A. Model CN–235, CN–235–200, and CN–235–300 airplanes. AD 2018–25–16 required revising the existing maintenance or inspection program, as applicable, to incorporate new or more restrictive airworthiness limitations. Since the FAA issued AD 2018–25–16, the FAA has determined that additional new or more restrictive airworthiness limitations, including inspections for discrepancies (cracking) of certain structural elements, are necessary. This AD requires revising the existing maintenance or inspection program, as applicable, to incorporate additional new or more restrictive airworthiness limitations, and repetitive inspections for discrepancies (cracking) of certain structural elements and corrective actions; as specified in a European Union Aviation Safety Agency (EASA) AD, which is incorporated by reference. The FAA is issuing this AD to address the unsafe condition on these products.

DATES: This AD is effective February 15, 2022.

The Director of the Federal Register approved the incorporation by reference of a certain publication listed in this AD as of February 15, 2022.

ADDRESSES: For EASA material incorporated by reference (IBR) in this AD, contact EASA, Konrad-Adenauer-Ufer 3, 50668 Cologne, Germany; telephone +49 221 8999 000; email *ADs@easa.europa.eu;* internet *www.easa.europa.eu.* You may find this IBR material on the EASA website at *https://ad.easa.europa.eu.* You may view this material at the FAA, Airworthiness Products Section, Operational Safety Branch, 2200 South 216th St., Des Moines, WA. For information on the availability of this material at the FAA, call 206–231–3195. It is also available in the AD docket at *https://www.regulations.gov* by searching for and locating Docket No. FAA–2021–0621.

Examining the AD Docket

You may examine the AD docket at *https://www.regulations.gov* by searching for and locating Docket No. FAA–2021–0621; or in person at Docket Operations between 9 a.m. and 5 p.m., Monday through Friday, except Federal holidays. The AD docket contains this final rule, the mandatory continuing airworthiness information (MCAI), any comments received, and other information. The address for Docket Operations is U.S. Department of Transportation, Docket Operations, M–30, West Building Ground Floor, Room W12–140, 1200 New Jersey Avenue SE, Washington, DC 20590.

FOR FURTHER INFORMATION CONTACT: Shahram Daneshmandi, Aerospace Engineer, Large Aircraft Section, International Validation Branch, FAA, 2200 South 216th St., Des Moines, WA 98198; telephone and fax 206–231–3220; email *shahram.daneshmandi@faa.gov.*

SUPPLEMENTARY INFORMATION:

Background

EASA, which is the Technical Agent for the Member States of the European Union, has issued EASA AD 2020–0251, dated November 11, 2020 (EASA AD 2020–0251) (also referred to as the MCAI), to correct an unsafe condition for all Airbus Defense and Space S.A. Model CN–235, CN–235–100, CN–235–200, and CN–235–300 airplanes.

The FAA issued a notice of proposed rulemaking (NPRM) to amend 14 CFR part 39 to supersede AD 2018–25–16, Amendment 39–19527 (83 FR 64441, December 17, 2018) (AD 2018–25–16). AD 2018–25–16 applied to certain Airbus Defense and Space S.A. Model CN–235, CN–235–200, and CN–235–300 airplanes. The NPRM published in the **Federal Register** on August 9, 2021 (86 FR 43437). The NPRM was prompted by a determination that additional new or more restrictive airworthiness limitations, including inspections for discrepancies (cracking) of certain structural elements, are necessary. The NPRM proposed to require revising the existing maintenance or inspection program, as applicable, to incorporate new or more restrictive airworthiness limitations, and repetitive inspections for discrepancies (cracking) of certain structural elements and corrective actions, as specified in EASA AD 2020–0251.

The FAA is issuing this AD to address fatigue cracking, damage, and corrosion in principal structural elements; such fatigue cracking, damage, and corrosion could result in reduced structural integrity of the airplane. See the MCAI for additional background information.

Discussion of Final Airworthiness Directive

Comments

The FAA received no comments on the NPRM or on the determination of the cost to the public.

Additional Changes Made to This AD

The FAA has revised paragraph (c) of this AD to remove the inadvertent reference to an airplane's original airworthiness certificate or original export certificate of airworthiness issued on or before March 20, 2018, from the applicability. As explained in the preamble of the NPRM, the intention was to follow the EASA AD 2020–0251's intent. None of the airplanes in the current U.S. fleet have an original airworthiness certificate or original export certificate of airworthiness issued after March 20, 2018. This change does not add any further requirements on any airplane on the U.S. registry, therefore, re-opening the public comment period to provide notice and opportunity for prior public comment are unnecessary, pursuant to 5 U.S.C 553(b)(3). However, paragraphs (h)(5) and (6) of this AD do retain the reference to an airplane's original airworthiness certificate or original export certificate of airworthiness issued on or before March 20, 2018. Those paragraphs state the FAA requirements in regards to maintenance or inspection program revisions to incorporate airworthiness limitations and are separate from the repetitive inspections that apply to all airplanes. Airplanes with an original airworthiness certificate or original export certificate of airworthiness issued after March 20, 2018, must comply with the airworthiness limitations specified as part of the approved type design and referenced on the type certificate data sheet. Therefore, this AD does not include those airplanes in the requirement to revise the existing maintenance or inspection program.

Conclusion

The FAA reviewed the relevant data, and determined that air safety requires adopting this AD as proposed. Except for minor editorial changes, and any other changes described previously, this AD is adopted as proposed in the NPRM. None of the changes will increase the economic burden on any

operator. Accordingly, the FAA is issuing this AD to address the unsafe condition on these products.

Related Service Information Under 1 CFR Part 51

EASA AD 2020–0251 specifies new or more restrictive airworthiness limitations for airplane systems, structural inspections, safe life structural items, and safe life system items. EASA AD 2020–0251 also describes repetitive inspections for discrepancies (cracking) of certain structural elements and corrective action (repair). This material is reasonably available because the interested parties have access to it through their normal course of business or by the means identified in the **ADDRESSES** section.

Costs of Compliance

The FAA estimates that this AD affects 8 airplanes of U.S. registry. The FAA estimates the following costs to comply with this AD:

The FAA has determined that revising the existing maintenance or inspection program takes an average of 90 work-hours per operator, although the agency recognizes that this number may vary from operator to operator. Since operators incorporate maintenance or inspection program changes for their affected fleet(s), the FAA has determined that a per-operator estimate is more accurate than a per-airplane estimate. The FAA estimates the total cost per operator for the new actions to be $7,650 (90 work-hours × $85 per work-hour).

ESTIMATED COSTS FOR REQUIRED ACTIONS

Action	Labor cost	Parts cost	Cost per product	Cost on U.S. operators
New inspections	60 work-hours × $85 per hour = $5,100	$0	$5,100	$40,800

The FAA has received no definitive data on which to base the cost estimates for the on-condition actions specified in this AD.

Authority for This Rulemaking

Title 49 of the United States Code specifies the FAA's authority to issue rules on aviation safety. Subtitle I, section 106, describes the authority of the FAA Administrator. Subtitle VII: Aviation Programs, describes in more detail the scope of the Agency's authority.

The FAA is issuing this rulemaking under the authority described in Subtitle VII, Part A, Subpart III, Section 44701: General requirements. Under that section, Congress charges the FAA with promoting safe flight of civil aircraft in air commerce by prescribing regulations for practices, methods, and procedures the Administrator finds necessary for safety in air commerce. This regulation is within the scope of that authority because it addresses an unsafe condition that is likely to exist or develop on products identified in this rulemaking action.

Regulatory Findings

This AD will not have federalism implications under Executive Order 13132. This AD will not have a substantial direct effect on the States, on the relationship between the national government and the States, or on the distribution of power and responsibilities among the various levels of government.

For the reasons discussed above, I certify that this AD:

(1) Is not a ''significant regulatory action'' under Executive Order 12866,

(2) Will not affect intrastate aviation in Alaska, and

(3) Will not have a significant economic impact, positive or negative, on a substantial number of small entities under the criteria of the Regulatory Flexibility Act.

List of Subjects in 14 CFR Part 39

Air transportation, Aircraft, Aviation safety, Incorporation by reference, Safety.

The Amendment

Accordingly, under the authority delegated to me by the Administrator, the FAA amends 14 CFR part 39 as follows:

PART 39—AIRWORTHINESS DIRECTIVES

■ 1. The authority citation for part 39 continues to read as follows:

Authority: 49 U.S.C. 106(g), 40113, 44701.

§ 39.13 [Amended]

■ 2. The FAA amends § 39.13 by:

■ a. Removing Airworthiness Directive (AD) 2018–25–16, Amendment 39–19527 (83 FR 64441, December 17, 2018); and

■ b. Adding the following new AD:

2021–25–06 Airbus Defense and Space S.A. (Formerly Known as Construcciones Aeronauticas, S.A.): Amendment 39–21849; Docket No. FAA–2021–0621; Project Identifier MCAI–2020–01517–T.

(a) Effective Date

This airworthiness directive (AD) is effective February 15, 2022.

(b) Affected ADs

This AD replaces AD 2018–25–16, Amendment 39–19527 (83 FR 64441, December 17, 2018) (AD 2018–25–16).

(c) Applicability

This AD applies to all Airbus Defense and Space S.A. (formerly known as Construcciones Aeronauticas, S.A.) Model CN–235, CN–235–100, CN–235–200, and CN–235–300 airplanes, certificated in any category.

(d) Subject

Air Transport Association (ATA) of America Code 05, Time Limits/Maintenance Checks; and 53, Fuselage.

(e) Reason

This AD was prompted by a determination that new or more restrictive airworthiness limitations, including inspections for discrepancies (cracking) of certain structural elements, are necessary. The FAA is issuing this AD to address fatigue cracking, damage, and corrosion in principal structural elements; such fatigue cracking, damage, and corrosion could result in reduced structural integrity of the airplane.

(f) Compliance

Comply with this AD within the compliance times specified, unless already done.

(g) Required Actions

Except as specified in paragraph (h) of this AD: Comply with all required actions and compliance times specified in, and in accordance with, European Union Aviation Safety Agency (EASA) AD 2020–0251, dated November 11, 2020 (EASA AD 2020–0251).

(h) Exceptions to EASA AD 2020–0251

(1) Where EASA AD 2020–0251 refers to its effective date, this AD requires using the effective date of this AD.

(2) The requirements specified in paragraph (4) of EASA AD 2020–0251 do not apply to this AD.

(3) Where paragraph (5) of EASA AD 2020–0251 specifies actions if discrepancies are found while accomplishing any task ''required by paragraph (1), (2), (3) or (4) of this [EASA] AD,'' this AD requires actions if discrepancies are found while accomplishing

any task ''required by paragraph (1), (2), or (3) of EASA AD 2020–0251.''

(4) Where paragraph (5) of EASA AD 2020–0251 specifies actions ''in case of finding discrepancies,'' for this AD, discrepancies include fatigue cracking.

(5) Paragraph (6) of EASA AD 2020–0251 specifies revising ''the approved AMP'' within 12 months after its effective date, but this AD requires, for airplanes with an original airworthiness certificate or original export certificate of airworthiness issued on or before March 20, 2018, revising the existing maintenance or inspection program, as applicable, to incorporate the ''limitations, tasks and associated thresholds and intervals'' specified in paragraph (6) of EASA AD 2020–0251 within 90 days after the effective date of this AD.

(6) For airplanes with an original airworthiness certificate or original export certificate of airworthiness issued on or before March 20, 2018, the initial compliance time for doing the tasks specified in paragraph (6) of EASA AD 2020–0251 is at the applicable ''thresholds'' as incorporated by the requirements of paragraph (6) of EASA AD 2020–0251, or within 90 days after the effective date of this AD, whichever occurs later.

(7) The provisions specified in paragraphs (7) and (8) of EASA AD 2020–0251 do not apply to this AD.

(8) The ''Remarks'' section of EASA AD 2020–0251 does not apply to this AD.

(i) New Provisions for Alternative Actions and Intervals

After the existing maintenance or inspection program has been revised as required by paragraph (g) of this AD, no alternative actions (*e.g.,* inspections) and intervals are allowed unless they are approved as specified in the provisions of the ''Ref. Publications'' section of EASA AD 2020–0251.

(j) No Reporting Requirement

Although the service information referenced in EASA AD 2020–0251 specifies to submit certain information to the manufacturer, this AD does not include that requirement.

(k) Additional AD Provisions

The following provisions also apply to this AD:

(1) *Alternative Methods of Compliance (AMOCs):* The Manager, Large Aircraft Section, International Validation Branch, FAA, has the authority to approve AMOCs for this AD, if requested using the procedures found in 14 CFR 39.19. In accordance with 14 CFR 39.19, send your request to your principal inspector or responsible Flight Standards Office, as appropriate. If sending information directly to the Large Aircraft Section, International Validation Branch, send it to the attention of the person identified in paragraph (l) of this AD. Information may be emailed to: *9-AVS-AIR-730-AMOC@faa.gov.* Before using any approved AMOC, notify your appropriate principal inspector, or lacking a principal inspector, the manager of the responsible Flight Standards Office.

(2) *Contacting the Manufacturer:* For any requirement in this AD to obtain instructions from a manufacturer, the instructions must be accomplished using a method approved by the Manager, Large Aircraft Section, International Validation Branch, FAA; or EASA; or Airbus Defense and Space S.A.'s EASA Design Organization Approval (DOA). If approved by the DOA, the approval must include the DOA-authorized signature.

(l) Related Information

For more information about this AD, contact Shahram Daneshmandi, Aerospace Engineer, Large Aircraft Section, International Validation Branch, FAA, 2200 South 216th St., Des Moines, WA 98198; telephone and fax 206–231–3220; email *shahram.daneshmandi@faa.gov.*

(m) Material Incorporated by Reference

(1) The Director of the Federal Register approved the incorporation by reference (IBR) of the service information listed in this paragraph under 5 U.S.C. 552(a) and 1 CFR part 51.

(2) You must use this service information as applicable to do the actions required by this AD, unless this AD specifies otherwise.

(i) European Union Aviation Safety Agency (EASA) AD 2020–0251, dated November 11, 2020.

(ii) [Reserved]

(3) For EASA AD 2020–0251, contact EASA, Konrad-Adenauer-Ufer 3, 50668 Cologne, Germany; telephone +49 221 8999 000; email *ADs@easa.europa.eu;* Internet *www.easa.europa.eu.* You may find this EASA AD on the EASA website at *https://ad.easa.europa.eu.*

(4) You may view this material at the FAA, Airworthiness Products Section, Operational Safety Branch, 2200 South 216th St., Des Moines, WA. For information on the availability of this material at the FAA, call 206–231–3195.

(5) You may view this material that is incorporated by reference at the National Archives and Records Administration (NARA). For information on the availability of this material at NARA, email *fr.inspection@nara.gov,* or go to: *https://www.archives.gov/federal-register/cfr/ibr-locations.html.*

Issued on December 2, 2021.

Lance T. Gant,

Director, Compliance & Airworthiness Division, Aircraft Certification Service.

[FR Doc. 2021–28579 Filed 1–10–22; 8:45 am]

BILLING CODE 4910–13–P

DEPARTMENT OF TRANSPORTATION

Federal Aviation Administration

14 CFR Part 39

[Docket No. FAA–2021–0841; Project Identifier MCAI–2021–00622–T; Amendment 39–21863; AD 2021–26–05]

RIN 2120–AA64

Airworthiness Directives; Saab AB, Support and Services (Formerly Known as Saab AB, Saab Aeronautics) Airplanes

AGENCY: Federal Aviation Administration (FAA), Department of Transportation (DOT).

ACTION: Final rule.

SUMMARY: The FAA is superseding Airworthiness Directive (AD) 2020–07–17, which applied to all Saab AB, Support and Services Model SAAB 2000 airplanes. AD 2020–07–17 required revising the existing maintenance or inspection program, as applicable, to incorporate new or more restrictive airworthiness limitations. Since the FAA issued AD 2020–07–17, it has determined that new or more restrictive airworthiness limitations are necessary. This AD retains the requirements of AD 2020–07–17 and requires revising the existing maintenance or inspection program, as applicable, to incorporate new or more restrictive airworthiness limitations, as specified in a European Union Aviation Safety Agency (EASA) AD. The FAA is issuing this AD to address the unsafe condition on these products.

DATES: This AD is effective February 15, 2022.

The Director of the Federal Register approved the incorporation by reference of a certain publication listed in this AD as of February 15, 2022.

The Director of the Federal Register approved the incorporation by reference of a certain other publication listed in this AD as of May 26, 2020 (85 FR 21764, April 20, 2020).

ADDRESSES: For material incorporated by reference (IBR) in this AD, contact EASA, Konrad-Adenauer-Ufer 3, 50668 Cologne, Germany; telephone +49 221 8999 000; email *ADs@easa.europa.eu;* internet *www.easa.europa.eu.* You may find this IBR material on the EASA website at *https://ad.easa.europa.eu.* You may view this material at the FAA, Airworthiness Products Section, Operational Safety Branch, 2200 South 216th St., Des Moines, WA. For information on the availability of this material at the FAA, call 206–231–3195. It is also available in the AD docket at

https://www.regulations.gov by searching for and locating Docket No. FAA–2021–0841.

Examining the AD Docket

You may examine the AD docket at *https://www.regulations.gov* by searching for and locating Docket No. FAA–2021–0841; or in person at Docket Operations between 9 a.m. and 5 p.m., Monday through Friday, except Federal holidays. The AD docket contains this final rule, the mandatory continuing airworthiness information (MCAI), any comments received, and other information. The address for Docket Operations is U.S. Department of Transportation, Docket Operations, M–30, West Building Ground Floor, Room W12–140, 1200 New Jersey Avenue SE, Washington, DC 20590.

FOR FURTHER INFORMATION CONTACT: Shahram Daneshmandi, Aerospace Engineer, Large Aircraft Section, International Validation Branch, FAA, 2200 South 216th St., Des Moines, WA 98198; telephone and fax 206–231–3220; *Shahram.Daneshmandi@faa.gov.*

SUPPLEMENTARY INFORMATION:

Background

EASA, which is the Technical Agent for the Member States of the European Union, has issued EASA AD 2021–0132, dated May 25, 2021 (EASA AD 2021–0132) (also referred to as the MCAI), to correct an unsafe condition for all Saab AB, Support and Services Model SAAB 2000 airplanes. EASA AD 2021–0132 superseded EASA AD 2019–0263, dated October 22, 2019 (EASA AD 2019–0263) (which corresponds to FAA AD 2020–07–17, Amendment 39–19896 (85 FR 21764, April 20, 2020) (AD 2020–07–17)).

The FAA issued a notice of proposed rulemaking (NPRM) to amend 14 CFR part 39 to supersede AD 2020–07–17. AD 2020–07–17 applied to all Saab AB, Support and Services Model SAAB 2000 airplanes. The NPRM published in the **Federal Register** on October 4, 2021 (86 FR 54663). The NPRM was prompted by a determination that new or more restrictive airworthiness limitations are necessary. The NPRM proposed to continue to require revising the existing maintenance or inspection program, as applicable, to incorporate new or more restrictive airworthiness limitations, as specified in EASA AD 2019–0263. The NPRM also proposed to require revising the existing maintenance or inspection program, as applicable, to incorporate new or more restrictive airworthiness limitations, as specified in EASA AD 2021–0132. Accomplishing the maintenance or inspection program revision required by paragraph (j) of this AD terminates the requirements of paragraph (g) of this AD (which restates paragraph (g) of AD 2020–07–17).

The FAA is issuing this AD to address, among other things, fatigue cracking of principal structural elements (PSEs) and corrosion prevention and control. This unsafe condition, if not addressed, could result in reduced structural integrity of a PSE, and lead to loss of control of the airplane.

Discussion of Final Airworthiness Directive

Comments

The FAA received no comments on the NPRM or on the determination of the cost to the public.

Conclusion

The FAA reviewed the relevant data and determined that air safety requires adopting this AD as proposed. Except for minor editorial changes, this AD is adopted as proposed in the NPRM. None of the changes will increase the economic burden on any operator. Accordingly, the FAA is issuing this AD to address the unsafe condition on these products.

Related Service Information Under 1 CFR Part 51

EASA AD 2021–0132 describes new or more restrictive airworthiness limitations for safe life limits, structural limitation items, and fuel airworthiness items, as well as certification maintenance requirements.

This AD also requires EASA AD 2019–0263, which the Director of the Federal Register approved for incorporation by reference as of May 26, 2020 (85 FR 21764, April 20, 2020).

This material is reasonably available because the interested parties have access to it through their normal course of business or by the means identified in the **ADDRESSES** section.

Costs of Compliance

The FAA estimates that this AD affects 9 airplanes of U.S. registry. The FAA estimates the following costs to comply with this AD:

The FAA estimates the total cost per operator for the retained actions from AD 2020–07–17 to be $7,650 (90 work-hours × $85 per work-hour).

The FAA has determined that revising the existing maintenance or inspection program takes an average of 90 work-hours per operator, although the agency recognizes that this number may vary from operator to operator. Since operators incorporate maintenance or inspection program changes for their affected fleet(s), the FAA has determined that a per-operator estimate is more accurate than a per-airplane estimate. The FAA estimates the total cost per operator for the new proposed maintenance/inspection program revision to be $7,650 (90 work-hours × $85 per work-hour).

Authority for This Rulemaking

Title 49 of the United States Code specifies the FAA's authority to issue rules on aviation safety. Subtitle I, section 106, describes the authority of the FAA Administrator. Subtitle VII: Aviation Programs, describes in more detail the scope of the Agency's authority.

The FAA is issuing this rulemaking under the authority described in Subtitle VII, Part A, Subpart III, Section 44701: General requirements. Under that section, Congress charges the FAA with promoting safe flight of civil aircraft in air commerce by prescribing regulations for practices, methods, and procedures the Administrator finds necessary for safety in air commerce. This regulation is within the scope of that authority because it addresses an unsafe condition that is likely to exist or develop on products identified in this rulemaking action.

Regulatory Findings

This AD will not have federalism implications under Executive Order 13132. This AD will not have a substantial direct effect on the States, on the relationship between the national government and the States, or on the distribution of power and responsibilities among the various levels of government.

For the reasons discussed above, I certify that this AD:

(1) Is not a ''significant regulatory action'' under Executive Order 12866,

(2) Will not affect intrastate aviation in Alaska, and

(3) Will not have a significant economic impact, positive or negative, on a substantial number of small entities under the criteria of the Regulatory Flexibility Act.

List of Subjects in 14 CFR Part 39

Air transportation, Aircraft, Aviation safety, Incorporation by reference, Safety.

The Amendment

Accordingly, under the authority delegated to me by the Administrator, the FAA amends 14 CFR part 39 as follows:

PART 39—AIRWORTHINESS DIRECTIVES

■ 1. The authority citation for part 39 continues to read as follows:

Authority: 49 U.S.C. 106(g), 40113, 44701.

§ 39.13 [Amended]

■ 2. The FAA amends § 39.13 by:
■ a. Removing Airworthiness Directive (AD) 2020–07–17, Amendment 39–19896 (85 FR 21764, April 20, 2020); and
■ b. Adding the following new AD:

2021–26–05 Saab AB, Support and Services (Formerly Known as Saab AB, Saab Aeronautics): Amendment 39–21863; Docket No. FAA–2021–0841; Project Identifier MCAI–2021–00622–T.

(a) Effective Date

This airworthiness directive (AD) is effective February 15, 2022.

(b) Affected ADs

This AD replaces AD 2020–07–17, Amendment 39–19896 (85 FR 21764, April 20, 2020) (AD 2020–07–17).

(c) Applicability

This AD applies to all Saab AB, Support and Services Model SAAB 2000 airplanes, certificated in any category.

(d) Subject

Air Transport Association (ATA) of America Code 05, Time Limits/Maintenance Checks.

(e) Reason

This AD was prompted by a determination that new or more restrictive airworthiness limitations are necessary. The FAA is issuing this AD to address, among other things, fatigue cracking of principal structural elements (PSEs) and corrosion prevention and control. This unsafe condition, if not addressed, could result in reduced structural integrity of a PSE, and lead to loss of control of the airplane.

(f) Compliance

Comply with this AD within the compliance times specified, unless already done.

(g) Retained Maintenance or Inspection Program Revision, With No Changes

This paragraph restates the requirements of paragraph (g) of AD 2020–07–17, with no changes. Except as specified in paragraph (h) of this AD: Comply with all required actions and compliance times specified in, and in accordance with, European Union Aviation Safety Agency (EASA) AD 2019–0263, dated October 22, 2019 (EASA AD 2019–0263). Accomplishing the maintenance or inspection program revision required by paragraph (j) of this AD terminates the requirements of this paragraph.

(h) Retained Exceptions to EASA AD 2019–0263, With Revised Exceptions

This paragraph restates the requirements of paragraph (h) of AD 2020–07–17, with revised exceptions.

(1) The requirements specified in paragraphs (1) and (2) of EASA AD 2019–0263 do not apply to this AD.

(2) Paragraph (3) of EASA AD 2019–0263 specifies revising ''the approved AMP [aircraft maintenance program]'' within 12 months after its effective date, but this AD requires revising the existing maintenance or inspection program, as applicable, to incorporate the ''limitations, tasks and associated thresholds and intervals'' specified in paragraph (3) of EASA AD 2019–0263 within 90 days after May 26, 2020 (the effective date of AD 2020–07–17).

(3) The initial compliance time for doing the tasks specified in paragraph (3) of EASA AD 2019–0263 is at the applicable ''associated thresholds'' specified in paragraph (3) of EASA AD 2019–0263, or within 90 days after May 26, 2020 (the effective date of AD 2020–07–17), whichever occurs later.

(4) The provisions specified in paragraphs (4) and (5) of EASA AD 2019–0263 do not apply to this AD.

(5) The ''Remarks'' section of EASA AD 2019–0263 does not apply to this AD.

(i) Retained Restrictions on Alternative Actions, Intervals, and Critical Design Configuration Control Limitations (CDCCLs), With a New Exception

This paragraph restates the requirements of paragraph (i) of AD 2020–07–17, with a new exception. Except as required by paragraph (j) of this AD, after the maintenance or inspection program has been revised as required by paragraph (g) of this AD, no alternative actions (*e.g.,* inspections), intervals, and CDCCLs are allowed unless they are approved as specified in the provisions of the ''Ref. Publications'' section of EASA AD 2019–0263.

(j) New Maintenance or Inspection Program Revision

Except as specified in paragraph (k) of this AD: Comply with all required actions and compliance times specified in, and in accordance with, EASA AD 2021–0132, dated May 25, 2021 (EASA AD 2021–0132). Accomplishing the maintenance or inspection program revision required by this paragraph terminates the requirements of paragraph (g) of this AD.

(k) Exceptions to EASA AD 2021–0132

(1) The requirements specified in paragraphs (1) and (2) of EASA AD 2021–0132 do not apply to this AD.

(2) Paragraph (3) of EASA AD 2021–0132 specifies revising ''the approved AMP'' within 12 months after its effective date, but this AD requires revising the existing maintenance or inspection program, as applicable, to incorporate the ''limitations, tasks and associated thresholds and intervals'' specified in paragraph (3) of EASA AD 2021–0132 within 90 days after the effective date of this AD.

(3) The initial compliance time for doing the tasks specified in paragraph (3) of EASA AD 2021–0132 is at the applicable ''associated thresholds'' specified in paragraph (3) of EASA AD 2021–0132, or within 90 days after the effective date of this AD, whichever occurs later.

(4) The provisions specified in paragraphs (4) and (5) of EASA AD 2021–0132 do not apply to this AD.

(5) The ''Remarks'' section of EASA AD 2021–0132 does not apply to this AD.

(l) New Provisions for Alternative Actions, Intervals, and CDCCLs

After the maintenance or inspection program has been revised as required by paragraph (j) of this AD, no alternative actions (*e.g.,* inspections), intervals, and CDCCLs are allowed unless they are approved as specified in the provisions of the ''Ref. Publications'' section of EASA AD 2021–0132.

(m) Additional AD Provisions

The following provisions also apply to this AD:

(1) *Alternative Methods of Compliance (AMOCs):* The Manager, Large Aircraft Section, International Validation Branch, FAA, has the authority to approve AMOCs for this AD, if requested using the procedures found in 14 CFR 39.19. In accordance with 14 CFR 39.19, send your request to your principal inspector or responsible Flight Standards Office, as appropriate. If sending information directly to the Large Aircraft Section, International Validation Branch, send it to the attention of the person identified in paragraph (n) of this AD. Information may be emailed to: *9-AVS-AIR-730-AMOC@faa.gov.* Before using any approved AMOC, notify your appropriate principal inspector, or lacking a principal inspector, the manager of the responsible Flight Standards Office.

(2) *Contacting the Manufacturer:* For any requirement in this AD to obtain instructions from a manufacturer, the instructions must be accomplished using a method approved by the Manager, Large Aircraft Section, International Validation Branch, FAA; or EASA; or Saab AB, Support and Services' (Formerly Known as Saab AB, Saab Aeronautics) EASA Design Organization Approval (DOA). If approved by the DOA, the approval must include the DOA-authorized signature.

(n) Related Information

For more information about this AD, contact Shahram Daneshmandi, Aerospace Engineer, Large Aircraft Section, International Validation Branch, FAA, 2200 South 216th St., Des Moines, WA 98198; telephone and fax 206–231–3220; *Shahram.Daneshmandi@faa.gov.*

(o) Material Incorporated by Reference

(1) The Director of the Federal Register approved the incorporation by reference (IBR) of the service information listed in this paragraph under 5 U.S.C. 552(a) and 1 CFR part 51.

(2) You must use this service information as applicable to do the actions required by this AD, unless this AD specifies otherwise.

(3) The following service information was approved for IBR on February 15, 2022.

(i) European Union Aviation Safety Agency (EASA) AD 2021–0132, dated May 25, 2021.

(ii) [Reserved]

(4) The following service information was approved for IBR on May 26, 2020 (85 FR 21764, April 20, 2020).

(i) European Union Aviation Safety Agency AD 2019–0263, dated October 22, 2019.

(ii) [Reserved]

(5) For EASA AD 2019–0263 and EASA AD 2021–0132, contact EASA, Konrad-Adenauer-Ufer 3, 50668 Cologne, Germany; telephone +49 221 8999 000; email *ADs@easa.europa.eu;* internet *www.easa.europa.eu.* You may find this EASA AD on the EASA website at *https://ad.easa.europa.eu.*

(6) You may view this material at the FAA, Airworthiness Products Section, Operational Safety Branch, 2200 South 216th St., Des Moines, WA. For information on the availability of this material at the FAA, call 206–231–3195.

(7) You may view this material that is incorporated by reference at the National Archives and Records Administration (NARA). For information on the availability of this material at NARA, email *fr.inspection@nara.gov,* or go to: *https://www.archives.gov/federal-register/cfr/ibr-locations.html.*

Issued on December 8, 2021.

Lance T. Gant,

Director, Compliance & Airworthiness Division, Aircraft Certification Service.

[FR Doc. 2021–28580 Filed 1–10–22; 8:45 am]

BILLING CODE 4910–13–P

DEPARTMENT OF TRANSPORTATION

Federal Aviation Administration

14 CFR Part 39

[Docket No. FAA–2021–0504; Project Identifier AD–2020–01380–T; Amendment 39–21876; AD 2021–26–17]

RIN 2120–AA64

Airworthiness Directives; The Boeing Company Airplanes

AGENCY: Federal Aviation Administration (FAA), DOT.

ACTION: Final rule.

SUMMARY: The FAA is superseding Airworthiness Directive (AD) 2019–03–26, which applied to certain The Boeing Company Model 737–600, –700, –700C, –800, –900, and –900ER series airplanes. AD 2019–03–26 required modifying the passenger service units (PSUs) and life vest panels by replacing the existing inboard lanyard and installing two new lanyards on the outboard edge of the PSUs and life vest panels; measuring the distance between the hooks of the torsion spring of the lanyard assembly; replacing discrepant lanyard assemblies; and re-identifying serviceable lanyard assemblies. This AD was prompted by a determination that certain airplanes are listed in the wrong configuration and certain PSUs have not been correctly re-identified. This AD retains the requirements of AD 2019–03–26, and, for certain airplanes, requires an inspection to determine if the re-identified PSU part number is correct, and further re-identification if necessary. The FAA is issuing this AD to address the unsafe condition on these products.

DATES: This AD is effective February 15, 2022.

The Director of the Federal Register approved the incorporation by reference of a certain publication listed in this AD as of February 15, 2022.

ADDRESSES: For service information identified in this final rule, contact Boeing Commercial Airplanes, Attention: Contractual & Data Services (C&DS), 2600 Westminster Blvd., MC 110–SK57, Seal Beach, CA 90740–5600; telephone 562–797–1717; internet *https://www.myboeingfleet.com.* You may view this service information at the FAA, Airworthiness Products Section, Operational Safety Branch, 2200 South 216th St., Des Moines, WA. For information on the availability of this material at the FAA, call 206–231–3195. It is also available at *https://www.regulations.gov* by searching for and locating Docket No. FAA–2021–0504.

Examining the AD Docket

You may examine the AD docket at *https://www.regulations.gov* by searching for and locating Docket No. FAA–2021–0504; or in person at Docket Operations between 9 a.m. and 5 p.m., Monday through Friday, except Federal holidays. The AD docket contains this final rule, any comments received, and other information. The address for Docket Operations is U.S. Department of Transportation, Docket Operations, M–30, West Building Ground Floor, Room W12–140, 1200 New Jersey Avenue SE, Washington, DC 20590.

FOR FURTHER INFORMATION CONTACT: Tony Koung, Aerospace Engineer, Cabin Safety and Environmental Systems Section, FAA, Seattle ACO Branch, 2200 South 216th St., Des Moines, WA 98198; phone and fax: 206–231–3985; email: *tony.koung@faa.gov.*

SUPPLEMENTARY INFORMATION:

Background

The FAA issued a notice of proposed rulemaking (NPRM) to amend 14 CFR part 39 to supersede AD 2019–03–26, Amendment 39–19578 (84 FR 7266, March 4, 2019) (AD 2019–03–26). AD 2019–03–26 applied to certain The Boeing Company Model 737–600, –700, –700C, –800, –900, and –900ER series airplanes. The NPRM published in the **Federal Register** on June 30, 2021 (86 FR 34653). The NPRM was prompted by a determination that certain airplanes are listed in the wrong configuration and certain PSUs have not been correctly re-identified. In the NPRM, the FAA proposed to continue to require the requirements of AD 2019–03–26, and, for certain airplanes, would require an inspection to determine if the re-identified PSU part number is correct, and further re-identification if necessary. The FAA is issuing this AD to address PSUs and life vest panels detaching from the supporting airplane structure, which could lead to passenger injuries and impede passenger and crew egress during evacuation.

Discussion of Final Airworthiness Directive

Comments

The FAA received comments from two commenters, including The Boeing Company and an individual, who supported the NPRM without change.

The FAA received additional comments from two other commenters, including All Nippon Airways (ANA) and Aviation Partners Boeing (APB). The following presents the comments received on the NPRM and the FAA's response to each comment.

Request To Allow Credit for Earlier Revision of Service Information

ANA requested that the proposed AD be revised to add a note to allow use of Boeing Service Bulletin 737–25–1707, Revision 1, dated May 18, 2018. ANA stated that it has some airplanes that are identified as ''Group 1'' airplanes in Boeing Special Attention Service Bulletin 737–25–1707, Revision 2, dated July 27, 2020, and on which Revision 1 of the service bulletin was accomplished. ANA added that the changes described in Revision 2 of the service bulletin do not affect the work instructions for airplanes identified as ''Group 1'' and believed that Revision 1 could also be used to comply with the proposed requirements.

The FAA disagrees with the request to revise this AD to allow use of Boeing Service Bulletin 737–25–1707, Revision 1, dated May 18, 2018, as it is not necessary. Group 1 is divided into three configurations, depending on whether or not earlier revisions of Boeing Special Attention Service Bulletin 737–25–1707, Revision 2, dated July 27, 2020, have been done. Group 1 airplanes on which Boeing Service Bulletin 737–25–1707, Revision 1, dated May 18, 2018, has been done are defined as Group 1, Configuration 3 airplanes. The

Accomplishment Instructions of Boeing Special Attention Service Bulletin 737–25–1707, Revision 2, dated July 27, 2020, specify for Group 1, Configuration 3 airplanes, that no further action is required, and therefore this AD does not require further action. The FAA has not revised this AD in this regard.

Effects of Winglets on Accomplishment of the Proposed Actions

APB stated that the installation of winglets per Supplemental Type Certificate (STC) ST00830SE does not affect the accomplishment of the manufacturer's service instructions.

The FAA agrees with the commenter that STC ST00830SE does not affect the accomplishment of the manufacturer's service instructions. Therefore, the installation of STC ST00830SE does not affect the ability to accomplish the actions required by this AD. The FAA has not changed this AD in this regard.

Conclusion

The FAA reviewed the relevant data, considered any comments received, and determined that air safety requires adopting this AD as proposed. Except for minor editorial changes, this AD is adopted as proposed in the NPRM. None of the changes will increase the economic burden on any operator.

Related Service Information Under 1 CFR Part 51

The FAA reviewed Boeing Special Attention Service Bulletin 737–25–1707, Revision 2, dated July 27, 2020. This service information specifies procedures for modifying the PSUs and life vest panels by: Replacing the existing inboard lanyard and installing two new lanyards on the outboard edge of the PSUs and life vest panels (secondary retention features); measuring the distance between the hooks of the torsion spring of the lanyard assembly; replacing any discrepant lanyard assemblies; and re-identifying serviceable lanyard assemblies. For some airplanes, the service information specifies procedures for inspecting PSUs for correct re-identification part numbers and, if necessary, re-identifying the PSU. This service information is reasonably available because the interested parties have access to it through their normal course of business or by the means identified in **ADDRESSES**.

Costs of Compliance

The FAA estimates that this AD will affect 2,045 airplanes of U.S. registry. The FAA estimates the following costs to comply with this AD:

ESTIMATED COSTS

Action	Labor cost	Parts cost	Cost per product	Cost on U.S. operators
Measurement and modification (retained actions from AD 2019–03–26).	Up to 70 work-hour × $85 per hour = $5,950.	Up to $13,000	Up to $18,950	Up to $38,752,750.
Inspection of re-identified parts (per PSU) (new actions).	1 work-hour × $85 per hour = $85.	$0	$85	$173,825.

The FAA estimates the following costs to do any necessary replacements or re-identifications that will be required based on the results of the inspection. The FAA has no way of determining the number of aircraft that might need these replacements or re-identifications:

ON-CONDITION COSTS

Action	Labor cost	Parts cost	Cost per product
Replacement or re-identification (per PSU or life vest panel).	Up to 2 work-hour × $85 per hour = $170.	Up to $196	Up to $366.

The FAA has included all known costs in its cost estimate. According to the manufacturer, however, some of the costs of this AD may be covered under warranty, thereby reducing the cost impact on affected operators.

Authority for This Rulemaking

Title 49 of the United States Code specifies the FAA's authority to issue rules on aviation safety. Subtitle I, section 106, describes the authority of the FAA Administrator. Subtitle VII: Aviation Programs, describes in more detail the scope of the Agency's authority.

The FAA is issuing this rulemaking under the authority described in Subtitle VII, Part A, Subpart III, Section 44701: General requirements. Under that section, Congress charges the FAA with promoting safe flight of civil aircraft in air commerce by prescribing regulations for practices, methods, and procedures the Administrator finds necessary for safety in air commerce. This regulation is within the scope of that authority because it addresses an unsafe condition that is likely to exist or develop on products identified in this rulemaking action.

Regulatory Findings

This AD will not have federalism implications under Executive Order 13132. This AD will not have a substantial direct effect on the States, on the relationship between the national government and the States, or on the distribution of power and responsibilities among the various levels of government.

For the reasons discussed above, I certify that this AD:

(1) Is not a ''significant regulatory action'' under Executive Order 12866,

(2) Will not affect intrastate aviation in Alaska, and

(3) Will not have a significant economic impact, positive or negative, on a substantial number of small entities under the criteria of the Regulatory Flexibility Act.

List of Subjects in 14 CFR Part 39

Air transportation, Aircraft, Aviation safety, Incorporation by reference, Safety.

The Amendment

Accordingly, under the authority delegated to me by the Administrator, the FAA amends 14 CFR part 39 as follows:

PART 39—AIRWORTHINESS DIRECTIVES

■ 1. The authority citation for part 39 continues to read as follows:

Authority: 49 U.S.C. 106(g), 40113, 44701.

§ 39.13 [Amended]

■ 2. The FAA amends § 39.13 by:
■ a. Removing Airworthiness Directive (AD) 2019–03–26, Amendment 39–19578 (84 FR 7266, March 4, 2019); and
■ b. Adding the following new AD:

2021–26–17 The Boeing Company: Amendment 39–21876; Docket No. FAA–2021–0504; Project Identifier AD–2020–01380–T.

(a) Effective Date

This airworthiness directive (AD) is effective February 15, 2022.

(b) Affected ADs

This AD replaces AD 2019–03–26, Amendment 39–19578 (84 FR 7266, March 4, 2019) (AD 2019–03–26).

(c) Applicability

This AD applies to The Boeing Company Model 737–600, –700, –700C, –800, –900, and –900ER series airplanes, certificated in any category, without a Boeing Sky Interior (BSI).

(d) Subject

Air Transport Association (ATA) of America Code 25, Equipment/furnishings.

(e) Unsafe Condition

This AD was prompted by reports of passenger service units (PSUs) becoming detached from the supporting airplane structure in several Model 737 series airplanes during survivable accidents. The FAA is issuing this AD to address PSUs and life vest panels detaching from the supporting airplane structure, which could lead to passenger injuries and impede passenger and crew egress during evacuation.

(f) Compliance

Comply with this AD within the compliance times specified, unless already done.

(g) Required Actions

Within 60 months after April 8, 2019 (the effective date of AD 2019–03–26), do all applicable actions identified as ''RC'' (required for compliance) in, and in accordance with, the Accomplishment Instructions of Boeing Special Attention Service Bulletin 737–25–1707, Revision 2, dated July 27, 2020.

(h) Parts Installation Limitation

As of the applicable time specified in paragraph (h)(1) or (2) of this AD, no person may install on any airplane a PSU or life vest panel, unless the lanyard assembly has been modified (secondary retention features added) or re-identified, as applicable, as required by paragraph (g) of this AD.

(1) For airplanes that have PSUs or life vest panels without the secondary retention features installed: After modification or re-identification, as applicable, of the airplane as required by paragraph (g) of this AD.

(2) For airplanes that have PSUs or life vest panels with the secondary retention features installed: As of the effective date of this AD.

(i) Alternative Methods of Compliance (AMOCs)

(1) The Manager, Seattle ACO Branch, FAA, has the authority to approve AMOCs for this AD, if requested using the procedures found in 14 CFR 39.19. In accordance with 14 CFR 39.19, send your request to your principal inspector or responsible Flight Standards Office, as appropriate. If sending information directly to the manager of the certification office, send it to the attention of the person identified in paragraph (j) of this AD. Information may be emailed to: *9-ANM-Seattle-ACO-AMOC-Requests@faa.gov.*

(2) Before using any approved AMOC, notify your appropriate principal inspector, or lacking a principal inspector, the manager of the responsible Flight Standards Office.

(3) An AMOC that provides an acceptable level of safety may be used for any repair, modification, or alteration required by this AD if it is approved by The Boeing Company Organization Designation Authorization (ODA) that has been authorized by the Manager, Seattle ACO Branch, FAA, to make those findings. To be approved, the repair method, modification deviation, or alteration deviation must meet the certification basis of the airplane, and the approval must specifically refer to this AD.

(4) AMOCs approved for AD 2019–03–26 are approved as AMOCs for the corresponding provisions of Boeing Special Attention Service Bulletin 737–25–1707, Revision 2, dated July 27, 2020, that are required by paragraph (g) of this AD.

(j) Related Information

For more information about this AD, contact Tony Koung, Aerospace Engineer, Cabin Safety and Environmental Systems Section, FAA, Seattle ACO Branch, 2200 South 216th St., Des Moines, WA 98198; phone and fax: 206–231–3985; email: *tony.koung@faa.gov.*

(k) Material Incorporated by Reference

(1) The Director of the Federal Register approved the incorporation by reference (IBR) of the service information listed in this paragraph under 5 U.S.C. 552(a) and 1 CFR part 51.

(2) You must use this service information as applicable to do the actions required by this AD, unless the AD specifies otherwise.

(i) Boeing Special Attention Service Bulletin 737–25–1707, Revision 2, dated July 27, 2020.

(ii) [Reserved]

(3) For service information identified in this AD, contact Boeing Commercial Airplanes, Attention: Contractual & Data Services (C&DS), 2600 Westminster Blvd., MC 110–SK57, Seal Beach, CA 90740–5600; telephone 562–797–1717; internet *https://www.myboeingfleet.com.*

(4) You may view this service information at the FAA, Airworthiness Products Section, Operational Safety Branch, 2200 South 216th St., Des Moines, WA. For information on the availability of this material at the FAA, call 206–231–3195.

(5) You may view this service information that is incorporated by reference at the National Archives and Records Administration (NARA). For information on the availability of this material at NARA, email *fr.inspection@nara.gov*, or go to: *https://www.archives.gov/federal-register/cfr/ibr-locations.html.*

Issued on December 13, 2021.

Lance T. Gant,

Director, Compliance & Airworthiness Division, Aircraft Certification Service.

[FR Doc. 2022–00031 Filed 1–10–22; 8:45 am]

BILLING CODE 4910–13–P

DEPARTMENT OF TRANSPORTATION

Federal Aviation Administration

14 CFR Part 39

[Docket No. FAA–2021–0871; Project Identifier MCAI–2020–01581–A; Amendment 39–21874; AD 2021–26–15]

RIN 2120–AA64

Airworthiness Directives; Vulcanair S.p.A. Airplanes

AGENCY: Federal Aviation Administration (FAA), DOT.

ACTION: Final rule.

SUMMARY: The FAA is adopting a new airworthiness directive (AD) for certain km, Vulcanair S.p.A. Model P.68C, P.68C–TC, P.68 ''OBSERVER,'' P.68 OBSERVER 2, P.68R, and P.68TC OBSERVER airplanes. This AD was prompted by mandatory continuing airworthiness information (MCAI) originated by an aviation authority of another country to identify and correct an unsafe condition on an aviation product. The MCAI identifies the unsafe condition as a damaged stabilator trim control cable. This AD requires inspecting the stabilator trim control cables and replacing if necessary. This AD also requires reporting the results of each inspection to Vulcanair S.p.A. The FAA is issuing this AD to address the unsafe condition on these products.

DATES: This AD is effective February 15, 2022.

The Director of the Federal Register approved the incorporation by reference of a certain publication listed in this AD as of February 15, 2022.

ADDRESSES: For service information identified in this final rule, contact Vulcanair S.p.A., Fulvio Oloferni, via Giovanni Pascoli, 7, Naples, 80026, Italy; phone: +39 081 5918 135; email: *airworthiness@vulcanair.com;* website: *www.vulcanair.com.* You may view this service information at the FAA,

Airworthiness Products Section, Operational Safety Branch, 901 Locust, Kansas City, MO 64106. For information on the availability of this material at the FAA, call (817) 222–5110. It is also available at *https://www.regulations.gov* by searching for and locating Docket No. FAA–2021–0871.

Examining the AD Docket

You may examine the AD docket at *https://www.regulations.gov* by searching for and locating Docket No. FAA–2021–0871; or in person at Docket Operations between 9 a.m. and 5 p.m., Monday through Friday, except Federal holidays. The AD docket contains this final rule, the MCAI, any comments received, and other information. The address for Docket Operations is U.S. Department of Transportation, Docket Operations, M–30, West Building Ground Floor, Room W12–140, 1200 New Jersey Avenue SE, Washington, DC 20590.

FOR FURTHER INFORMATION CONTACT:

Gregory Johnson, Aviation Safety Engineer, International Validation Section, FAA, 901 Locust, Room 301, Kansas City, MO 64106; phone: (720) 626–5462; email: *gregory.johnson@faa.gov.*

SUPPLEMENTARY INFORMATION:

Background

The FAA issued a notice of proposed rulemaking (NPRM) to amend 14 CFR part 39 by adding an AD that would apply to certain serial-numbered Vulcanair S.p.A. Model P.68C, P.68C–TC, P.68 ''OBSERVER,'' P.68 OBSERVER 2, P.68R, and P.68TC OBSERVER airplanes. The NPRM published in the **Federal Register** on October 8, 2021 (86 FR 56229). The NPRM was prompted by MCAI originated by the European Union Aviation Safety Agency (EASA), which is the Technical Agent for the Member States of the European Union. EASA issued EASA AD 2020–0262, dated November 30, 2020 (referred to after this as ''the MCAI''), to correct an unsafe condition on certain serial-numbered Vulcanair S.p.A. Model P.68R, P.68C, P.68C–TC, P.68 ''OBSERVER,'' P.68 ''OBSERVER 2,'' and P.68TC ''OBSERVER'' airplanes. The MCAI states:

> Two occurrences have been reported of finding a damaged stabilator trim control cable connected to the stabilator trim actuator assembly, mounted on fuselage frame No.16. The related technical investigation concluded that the cause of the damage is a design issue.
>
> This condition, if not detected and corrected, could lead to failure of an affect [sic] part, preventing trim surface control (remaining in the last position), possibly resulting in reduced control of the aeroplane.
>
> To address this potential unsafe condition, and pending a design improvement, Vulcanair published the [service bulletin] SB, to provide inspection instructions for detecting damage.
>
> For the reasons described above, this [EASA] AD requires repetitive inspections of the affected parts, and, depending on findings, replacement.
>
> This [EASA] AD is considered to be an interim action and further [EASA] AD action may follow.

You may examine the MCAI in the AD docket at *https://www.regulations.gov* by searching for and locating Docket No. FAA–2021–0871.

Discussion of Final Airworthiness Directive

Comments

The FAA received no comments on the NPRM or on the determination of the costs.

Conclusion

This product has been approved by the aviation authority of another country and is approved for operation in the United States. Pursuant to the FAA's bilateral agreement with this State of Design Authority, it has notified the FAA of the unsafe condition described in the MCAI referenced above. The FAA determined that air safety requires adopting this AD as proposed. Accordingly, the FAA is issuing this AD to address the unsafe condition on these products. This AD is adopted as proposed in the NPRM.

Related Service Information Under 1 CFR Part 51

The FAA reviewed Vulcanair S.p.A. P.68 Variants Service Bulletin No. 263, dated October 20, 2020. The service information contains procedures for repetitively inspecting each stabilator trim control cable part number 5.6067–1, 5.6161–1, 5.6171–1, 5.6231–2, or 5.6231–4 for broken wires and replacing the cable if necessary. This service information is reasonably available because the interested parties have access to it through their normal course of business or by the means identified in the **ADDRESSES** section.

Interim Action

The FAA considers this AD an interim action. The inspection reports required by this AD will enable the manufacturer to obtain better insight into the nature, cause, and extent of the damage, and eventually to develop final action to address the unsafe condition. Once final action has been identified, the FAA might consider further rulemaking.

Costs of Compliance

The FAA estimates that this AD affects 127 airplanes of U.S. registry.

The FAA estimates the following costs to comply with this AD:

ESTIMATED COSTS

Action	Labor cost	Parts cost	Cost per airplane	Cost on U.S. operators
Inspection	0.50 work-hour × $85 per hour = $42.50 per inspection cycle.	$0	$42.50 per inspection cycle	$5,397.50 per inspection cycle.
Report	1 work-hour × $85 per hour = $85 per reporting cycle.	$0	$85 per inspection cycle	$10,795 per inspection cycle.

The FAA estimates the following costs to do any replacements that would be required based on the results of the inspection. The FAA has no way of determining the number of airplanes that might need this replacement:

ON-CONDITION COSTS

Action	Labor cost	Parts cost	Cost per airplane
Replacement	2 work-hours × $85 per hour = $170	$340	$510

Paperwork Reduction Act

A federal agency may not conduct or sponsor, and a person is not required to respond to, nor shall a person be subject to a penalty for failure to comply with a collection of information subject to the requirements of the Paperwork Reduction Act unless that collection of information displays a currently valid OMB Control Number. The OMB Control Number for this information collection is 2120–0056. Public reporting for this collection of information is estimated to be approximately 1 hour per response, including the time for reviewing instructions, searching existing data sources, gathering and maintaining the data needed, completing and reviewing the collection of information. All responses to this collection of information are mandatory. Send comments regarding this burden estimate or any other aspect of this collection of information, including suggestions for reducing this burden to: Information Collection Clearance Officer, Federal Aviation Administration, 10101 Hillwood Parkway, Fort Worth, TX 76177–1524.

Authority for This Rulemaking

Title 49 of the United States Code specifies the FAA's authority to issue rules on aviation safety. Subtitle I, section 106, describes the authority of the FAA Administrator. Subtitle VII: Aviation Programs, describes in more detail the scope of the Agency's authority.

The FAA is issuing this rulemaking under the authority described in Subtitle VII, Part A, Subpart III, Section 44701: General requirements. Under that section, Congress charges the FAA with promoting safe flight of civil aircraft in air commerce by prescribing regulations for practices, methods, and procedures the Administrator finds necessary for safety in air commerce. This regulation is within the scope of that authority because it addresses an unsafe condition that is likely to exist or develop on products identified in this rulemaking action.

Regulatory Findings

This AD will not have federalism implications under Executive Order 13132. This AD will not have a substantial direct effect on the States, on the relationship between the national government and the States, or on the distribution of power and responsibilities among the various levels of government. For the reasons discussed above, I certify that this AD:

(1) Is not a ''significant regulatory action'' under Executive Order 12866,

(2) Will not affect intrastate aviation in Alaska, and

(3) Will not have a significant economic impact, positive or negative, on a substantial number of small entities under the criteria of the Regulatory Flexibility Act.

List of Subjects in 14 CFR Part 39

Air transportation, Aircraft, Aviation safety, Incorporation by reference, Safety.

The Amendment

Accordingly, under the authority delegated to me by the Administrator, the FAA amends 14 CFR part 39 as follows:

PART 39—AIRWORTHINESS DIRECTIVES

■ 1. The authority citation for part 39 continues to read as follows:

Authority: 49 U.S.C. 106(g), 40113, 44701.

§ 39.13 [Amended]

■ 2. The FAA amends § 39.13 by adding the following new airworthiness directive:

2021–26–15 Vulcanair S.p.A.: Amendment 39–21874; Docket No. FAA–2021–0871; Project Identifier MCAI–2020–01581–A.

(a) Effective Date

This airworthiness directive (AD) is effective February 15, 2022.

(b) Affected ADs

None.

(c) Applicability

This AD applies to Vulcanair S.p.A. (Vulcanair) Model P.68C, P.68C–TC, P.68 ''OBSERVER,'' P.68 OBSERVER 2, P.68R, and P.68TC OBSERVER airplanes, serial numbers 333, 337 to 339 inclusive, 378, 379, and 383 and larger (except serial numbers 387 and 398), certificated in any category, with a stabilator trim control cable part number 5.6067–1, 5.6161–1, 5.6171–1, 5.6231–2, or 5.6231–4 installed.

(d) Subject

Joint Aircraft System Component (JASC) Code 2740, Stabilizer Control System.

(e) Unsafe Condition

This AD was prompted by a damaged stabilator trim control cable connected to the stabilator trim actuator assembly, mounted on fuselage frame No. 16. The FAA is issuing this AD to detect and address failure of a stabilator trim control cable, which could prevent trim surface control thereby leaving the cable remaining in the last position. The unsafe condition, if not addressed, could result in reduced control of the airplane.

(f) Compliance

Comply with this AD within the compliance times specified, unless already done.

(g) Required Actions

Before a stabilator trim control cable part number 5.6067–1, 5.6161–1, 5.6171–1, 5.6231–2, or 5.6231–4 accumulates more than 400 hours time-in-service (TIS) since first installation on an airplane or within 50 hours TIS after the effective date of this AD, whichever occurs later, and thereafter at intervals not to exceed 50 hours TIS, visually inspect the stabilator trim control cable for broken wires and replace the stabilator trim control cable before further flight if there is broken wire in a strand in accordance with steps 1 through 22 of Part 2 Work Procedure in Vulcanair S.p.A. P.68 Variants Service Bulletin No. 263, dated October 20, 2020.

(h) Reporting

Within 14 days after the initial inspection required by paragraph (g) of this AD or within 14 days after the effective date of this AD, whichever occurs later, report the results of the initial inspection to Vulcanair at *continued.airworthiness@vulcanaair.com* or at the address in paragraph (l)(3) of this AD. Thereafter, report the inspection results within 14 days after each inspection. Each report must include the following information:

(1) Owner/operator name, mailing address, phone number, and email address;

(2) Airplane model, serial number, and registration number;

(3) Airplane hours TIS at the time of the inspection;

(4) Stabilator trim control cable hours TIS at the time of the inspection;

(5) Date of the inspection;

(6) Inspection result (positive or negative); and

(7) A description of any non-conformity (damage).

(i) Special Flight Permit

Special flight permits are prohibited.

(j) Alternative Methods of Compliance (AMOCs)

(1) The Manager, International Validation Branch, FAA, has the authority to approve AMOCs for this AD, if requested using the

procedures found in 14 CFR 39.19. In accordance with 14 CFR 39.19, send your request to your principal inspector or local Flight Standards District Office, as appropriate. If sending information directly to the manager of the certification office, send it to the attention of the person identified in paragraph (k)(1) of this AD and email to: *9-AVS-AIR-730-AMOC@faa.gov.*

(2) Before using any approved AMOC, notify your appropriate principal inspector, or lacking a principal inspector, the manager of the local flight standards district office/certificate holding district office.

(k) Related Information

(1) For more information about this AD, contact Gregory Johnson, Aviation Safety Engineer, FAA, General Aviation & Rotorcraft Section, International Validation Section, 901 Locust, Room 301, Kansas City, MO 64106; phone: (720) 626–5462; email: *gregory.johnson@faa.gov.*

(2) Refer to European Union Aviation Safety Agency (EASA) AD 2020–0262, dated November 30, 2020, for more information. You may examine the EASA AD in the AD docket at *https://www.regulations.gov* by searching for and locating Docket No. FAA–2021–0871.

(l) Material Incorporated by Reference

(1) The Director of the Federal Register approved the incorporation by reference of the service information listed in this paragraph under 5 U.S.C. 552(a) and 1 CFR part 51.

(2) You must use this service information as applicable to do the actions required by this AD, unless the AD specifies otherwise.

(i) Vulcanair S.p.A. P.68 Variants Service Bulletin No. 263, dated October 20, 2020.

(ii) [Reserved]

(3) For service information identified in this AD, contact Vulcanair S.p.A., Fulvio Oloferni, via Giovanni Pascoli, 7, Naples, 80026, Italy; phone: +39 081 5918 135; email: *airworthiness@vulcanair.com;* website: *www.vulcanair.com.*

(4) You may view this service information at FAA, Airworthiness Products Section, Operational Safety Branch, 901 Locust, Kansas City, MO 64106. For information on the availability of this material at the FAA, call (817) 222–5110.

(5) You may view this service information that is incorporated by reference at the National Archives and Records Administration (NARA). For information on the availability of this material at NARA, email: *fr.inspection@nara.gov,* or go to: *https://www.archives.gov/federal-register/cfr/ibr-locations.html.*

Issued on December 10, 2021.

Lance T. Gant,

Director, Compliance & Airworthiness Division, Aircraft Certification Service.

[FR Doc. 2022–00056 Filed 1–10–22; 8:45 am]

BILLING CODE 4910–13–P

DEPARTMENT OF TRANSPORTATION

Federal Aviation Administration

14 CFR Part 39

[Docket No. FAA–2021–0567; Project Identifier AD–2021–00663–E; Amendment 39–21865; AD 2021–26–06]

RIN 2120–AA64

Airworthiness Directives; General Electric Company Turbofan Engines

AGENCY: Federal Aviation Administration (FAA), DOT.

ACTION: Final rule.

SUMMARY: The FAA is adopting a new airworthiness directive (AD) for certain General Electric Company (GE) GE90 model turbofan engines. This AD was prompted by two separate in-flight shutdowns (IFSDs) resulting from failure of the transfer gearbox (TGB) radial bevel gear (TGB radial gearshaft). This AD requires visual inspection of the TGB radial gearshaft and, depending on the results of the inspection, replacement of the TGB radial gearshaft. The FAA is issuing this AD to address the unsafe condition on these products.

DATES: This AD is effective February 15, 2022.

The Director of the Federal Register approved the incorporation by reference of certain publications listed in this AD as of February 15, 2022.

ADDRESSES: For service information identified in this final rule, contact General Electric Company, GE Aviation, Room 285, 1 Neumann Way, Cincinnati, OH 45215; phone: (513) 552–3272; email: *aviation.fleetsupport@ge.com;* website: *https://www.ge.com.* You may view this service information at the FAA, Airworthiness Products Section, Operational Safety Branch, 1200 District Avenue, Burlington, MA 01803. For information on the availability of this material at the FAA, call (817) 222–5110. It is also available at *https://www.regulations.gov* by searching for and locating Docket No. FAA–2021–0567.

Examining the AD Docket

You may examine the AD docket at *https://www.regulations.gov* by searching for and locating Docket No. FAA–2021–0567; or in person at Docket Operations between 9 a.m. and 5 p.m., Monday through Friday, except Federal holidays. The AD docket contains this final rule, any comments received, and other information. The address for Docket Operations is U.S. Department of Transportation, Docket Operations, M–30, West Building Ground Floor, Room W12–140, 1200 New Jersey Avenue SE, Washington, DC 20590.

FOR FURTHER INFORMATION CONTACT: Stephen Elwin, Aviation Safety Engineer, ECO Branch, FAA, 1200 District Avenue, Burlington, MA 01803; phone: (781) 238–7236; fax: (781) 238–7199; email: *Stephen.L.Elwin@faa.gov.*

SUPPLEMENTARY INFORMATION:

Background

The FAA issued a notice of proposed rulemaking (NPRM) to amend 14 CFR part 39 by adding an AD that would apply to all GE GE90–76B, GE90–85B, GE90–90B, GE90–94B, GE90–110B1, and GE90–115B model turbofan engines with a certain TGB radial gearshaft installed. The NPRM published in the **Federal Register** on August 12, 2021 (86 FR 44321). The NPRM was prompted by notification of two separate IFSDs resulting from the failure of the TGB radial gearshaft. After further investigation, the manufacturer determined that rework on the TGB radial gearshaft teeth chamfers during manufacturing may have caused local burrs and micro-cracks which led to high-cycle fatigue failure. GE subsequently issued service information to provide instructions for a one-time visual inspection of the affected radial gearshafts for the presence of burrs or rework on TGB radial gearshaft teeth chamfers. In the NPRM, the FAA proposed to require visual inspection of the TGB radial gearshaft and, depending on the results of the inspection, replacement of the TGB radial gearshaft. The FAA is issuing this AD to address the unsafe condition on these products.

Discussion of Final Airworthiness Directive

Comments

The FAA received comments from 5 commenters. The commenters were Air Line Pilots Association, International, The Boeing Company, FedEx Express, Japan Airlines (JAL), and United Airlines. The following presents the comments received on the NPRM and the FAA's response to each comment.

Question on the Difference Between This AD and the Service Information

JAL asked why there is a difference between the affected serial numbers (S/Ns) in this AD and the related service bulletins (SBs).

The FAA notes that the applicable SBs include several populations of TGB radial gearshafts. The FAA determined that TGB radial gearshafts with S/Ns starting with prefix FIAAXXXX, FIA05XXX to FIA09XXX, or FIA0AXXX to FIA0NXXX are not subject to the

unsafe condition in this AD. Although this AD does not require that these TGB radial gearshafts be inspected and removed, operators may still elect to inspect these TGB radial gearshaft at the next scheduled engine shop visit.

Request To Clarify Engine Shop Visit Definition

JAL requested that the FAA clarify disassembly of the compressor discharge pressure (CDP) seal joint in the definition of ''engine shop visit.'' JAL indicated that they understand that disassembly of the CDP seal joint is the same as disassembly of the CDP seal flange bolt, but not the same as removal of the CDP seal.

The FAA notes that any disassembly of the CDP seal joint meets the definition of an engine shop visit.

Request To Clarify if Inspection Occurs During Quick Turn Workscope (QTW)

JAL asked if the TGB radial gearshaft is required to be inspected during engine QTW. JAL indicated that GE GE90–100 Service Bulletin (SB) 72–0857 R01, dated April 28, 2021 (GE90–100 SB 72–0857 R01), excludes the performance of the inspection during QTW. The proposed AD, however, did not reference QTW in the required inspection. JAL suggested that the FAA update this AD to either exclude QTW from the compliance requirement for inspection or clarify the difference between the service information and this AD.

The FAA understands that the CDP seal joint, in some cases, may require disassembly during a QTW; however, in this scenario the appropriate provisions would exist to perform the required actions of this AD. A QTW that does not disassemble the CDP seal joint would not meet the definition of an engine shop visit, per this AD.

Addition of Interim Action Paragraph

The FAA determined the need to add the Interim Action paragraph to this AD. The manufacturer is investigating if an additional population of TGB radial gear shafts are affected by the unsafe condition of this AD.

Support for the AD

Air Line Pilots Association, International, The Boeing Company, FedEx Express, and United Airlines expressed support for the AD as written.

Conclusion

The FAA reviewed the relevant data, considered any comments received, and determined that air safety requires adopting this AD as proposed. Accordingly, the FAA is issuing this AD to address the unsafe condition on these products. Except for minor editorial changes, and any other changes described previously, this AD is adopted as proposed in the NPRM. None of the changes will increase the economic burden on any operator.

Related Service Information Under 1 CFR Part 51

The FAA reviewed GE GE90 Service Bulletin (SB) 72–1201 R01, dated April 28, 2021 (GE90 SB 72–1201 R01), and GE90–100 SB 72–0857 R01, dated April 28, 2021. GE90 SB 72–1201 R01 specifies procedures for performing a one-time inspection of the TGB radial gearshaft for presence of burrs or rework on teeth chamfers on GE90–76B, GE90–85B, GE90–90B, and GE90–94B model turbofan engines. GE90–100 SB 72–0857 R01 specifies procedures for performing a one-time inspection of the TGB radial gearshaft for presence of burrs or rework on teeth chamfers on GE90–110B1 and GE90–115B model turbofan engines. This service information is reasonably available because the interested parties have access to it through their normal course of business or by the means identified in **ADDRESSES**.

Interim Action

The FAA considers this AD to be an interim action. If final action is later identified, the FAA may consider additional rulemaking.

Costs of Compliance

The FAA estimates that this AD affects 126 engines installed on airplanes of U.S. registry.

The FAA estimates the following costs to comply with this AD:

ESTIMATED COSTS

Action	Labor cost	Parts cost	Cost per product	Cost on U.S. operators
Inspect TGB radial gearshaft	1 work-hour × $85 per hour = $85	$0	$85	$10,710

The FAA estimates the following costs to do any necessary replacement that would be required based on the results of the inspection. The agency has no way of determining the number of aircraft that might need this replacement:

ON-CONDITION COSTS

Action	Labor cost	Parts cost	Cost per product
Replace TGB radial gearshaft	60 work-hours × $85 per hour = $5,100	$24,520	$29,620

Authority for This Rulemaking

Title 49 of the United States Code specifies the FAA's authority to issue rules on aviation safety. Subtitle I, section 106, describes the authority of the FAA Administrator. Subtitle VII: Aviation Programs, describes in more detail the scope of the Agency's authority.

The FAA is issuing this rulemaking under the authority described in Subtitle VII, Part A, Subpart III, Section 44701: General requirements. Under that section, Congress charges the FAA with promoting safe flight of civil aircraft in air commerce by prescribing regulations for practices, methods, and procedures the Administrator finds necessary for safety in air commerce. This regulation is within the scope of that authority because it addresses an unsafe condition that is likely to exist or develop on products identified in this rulemaking action.

Regulatory Findings

This AD will not have federalism implications under Executive Order 13132. This AD will not have a

substantial direct effect on the States, on the relationship between the national government and the States, or on the distribution of power and responsibilities among the various levels of government.

For the reasons discussed above, I certify that this AD:

(1) Is not a ''significant regulatory action'' under Executive Order 12866,

(2) Will not affect intrastate aviation in Alaska, and

(3) Will not have a significant economic impact, positive or negative, on a substantial number of small entities under the criteria of the Regulatory Flexibility Act.

List of Subjects in 14 CFR Part 39

Air transportation, Aircraft, Aviation safety, Incorporation by reference, Safety.

The Amendment

Accordingly, under the authority delegated to me by the Administrator, the FAA amends 14 CFR part 39 as follows:

PART 39—AIRWORTHINESS DIRECTIVES

■ 1. The authority citation for part 39 continues to read as follows:

Authority: 49 U.S.C. 106(g), 40113, 44701.

§ 39.13 [Amended]

■ 2. The FAA amends § 39.13 by adding the following new airworthiness directive:

2021–26–06 General Electric Company: Amendment 39–21865; Docket No. FAA–2021–0567; Project Identifier AD–2021–00663–E.

(a) Effective Date

This airworthiness directive (AD) is effective February 15, 2022.

(b) Affected ADs

None.

(c) Applicability

This AD applies to General Electric Company (GE) GE90–76B, GE90–85B, GE90–90B, GE90–94B, GE90–110B1, and GE90–115B model turbofan engines with a transfer gearbox (TGB) radial bevel gear (TGB radial gearshaft) serial number listed in paragraph 4., APPENDIX—A, Table 1 of GE GE90 Service Bulletin (SB) 72–1201 R01, dated April 28, 2021 (GE90 SB 72–1201 R01) or paragraph 4., APPENDIX—A, Table 1 of GE GE90–100 SB 72–0857 R01, dated April 28, 2021 (GE90–100 SB 72–0857 R01).

(d) Subject

Joint Aircraft System Component (JASC) Code 7260, Turbine Engine Accessory Drive.

(e) Unsafe Condition

This AD was prompted by two separate in-flight shutdowns resulting from the failure of the TGB radial gearshaft. The FAA is issuing this AD to prevent failure of the TGB radial gearshaft. The unsafe condition, if not addressed, could result in failure of one or more engines, loss of thrust control, and damage to the aircraft.

(f) Compliance

Comply with this AD within the compliance times specified, unless already done.

(g) Required Actions

(1) At the next engine shop visit after the effective date of this AD, perform a visual inspection of the affected TGB radial gearshaft using Figure 1 to paragraph (g)(1) of this AD.

Figure 1 to Paragraph (g)(1) – Visual Inspection of TGB Radial Gearshaft

Model Engine	Use
GE90-76B, GE90-85B, GE90-90B, and GE90-94B	Paragraph 3.A.(3)(a)1 through 3, of GE90 SB 72-1201 R01
GE90-110B1 and GE90-115B	Paragraph 3.A.(3)(a)1 through 3, of GE90-100 SB 72-0857 R01

(2) If, during the visual inspection required by paragraph (g)(1) of this AD, discrepancies are found that meet the criteria in the Accomplishment Instructions, paragraph 3.A.(4)(a) or 3.A.(4)(b), of GE90 SB 72–1201 R01 or GE90–100 SB 72–0857 R01, before further flight, replace the TGB radial gearshaft with a part eligible for installation.

(h) Definitions

(1) For the purpose of this AD, an ''engine shop visit'' is when the compressor discharge pressure seal joint is disassembled.

(2) For the purpose of this AD, a ''part eligible for installation'' is a TGB radial gearshaft that does not have raised material or rework on the teeth chamfers as described in the Accomplishment Instructions, paragraph 3.A.(4)(a) or 3.A.(4)(b), of GE90 SB 72–1201 R01 or GE90–100 SB 72–0857 R01.

(i) Credit for Previous Actions

You may take credit for the inspection of the affected TGB radial gearshaft required by paragraph (g)(1) of this AD if you performed the inspection before the effective date of this AD using GE GE90 SB 72–1201 R00, dated January 5, 2021, or GE GE90–100 SB 72–0857 R00, dated January 5, 2021.

(j) Alternative Methods of Compliance (AMOCs)

(1) The Manager, ECO Branch, FAA, has the authority to approve AMOCs for this AD, if requested using the procedures found in 14 CFR 39.19. In accordance with 14 CFR 39.19, send your request to your principal inspector or local Flight Standards District Office, as appropriate. If sending information directly to the manager of the certification office, send it to the attention of the person identified in paragraph (k) of this AD. You may email your request to *ANE-AD-AMOC@faa.gov.*

(2) Before using any approved AMOC, notify your appropriate principal inspector, or lacking a principal inspector, the manager of the local flight standards district office/certificate holding district office.

(k) Related Information

For more information about this AD, contact Stephen Elwin, Aviation Safety Engineer, ECO Branch, FAA, 1200 District Avenue, Burlington, MA 01803; phone: (781) 238–7236; fax: (781) 238–7199; email: *Stephen.L.Elwin@faa.gov.*

(l) Material Incorporated by Reference

(1) The Director of the Federal Register approved the incorporation by reference (IBR) of the service information listed in this paragraph under 5 U.S.C. 552(a) and 1 CFR part 51.

(2) You must use this service information as applicable to do the actions required by this AD, unless the AD specifies otherwise.

(i) General Electric Company (GE) GE90 Service Bulletin (SB) 72–1201 R01, dated April 28, 2021.

(ii) GE GE90–100 SB 72–0857 R01, dated April 28, 2021.

(3) For GE service information identified in this AD, contact General Electric Company, GE Aviation, Room 285, 1 Neumann Way, Cincinnati, OH 45215; phone: (513) 552–3272; email: *aviation.fleetsupport@ge.com;* website: *https://www.ge.com.*

(4) You may view this service information at FAA, Airworthiness Products Section, Operational Safety Branch, 1200 District Avenue, Burlington, MA 01803. For

information on the availability of this material at the FAA, call (817) 222–5110.

(5) You may view this service information that is incorporated by reference at the National Archives and Records Administration (NARA). For information on the availability of this material at NARA, email: *fr.inspection@nara.gov,* or go to: *https://www.archives.gov/federal-register/cfr/ibr-locations.html.*

Issued on December 9, 2021.

Lance T. Gant,

Director, Compliance & Airworthiness Division, Aircraft Certification Service.

[FR Doc. 2022–00049 Filed 1–10–22; 8:45 am]

BILLING CODE 4910–13–P

DEPARTMENT OF TRANSPORTATION

Federal Aviation Administration

14 CFR Part 39

[Docket No. FAA–2021–0784; Project Identifier MCAI–2020–01455–T; Amendment 39–21857; AD 2021–25–13]

RIN 2120–AA64

Airworthiness Directives; Bombardier, Inc. Airplanes

AGENCY: Federal Aviation Administration (FAA), Department of Transportation (DOT).

ACTION: Final rule.

SUMMARY: The FAA is adopting a new airworthiness directive (AD) for certain Bombardier, Inc., Model CL–600–1A11 (600), CL–600–2A12 (601), and CL–600–2B16 (601–3A, 601–3R, and 604 Variants) airplanes. This AD was prompted by a determination that new or more restrictive airworthiness limitations are necessary. This AD requires revising the existing maintenance or inspection program, as applicable, to incorporate new or more restrictive airworthiness limitations. The FAA is issuing this AD to address the unsafe condition on these products.

DATES: This AD is effective February 15, 2022.

The Director of the Federal Register approved the incorporation by reference of certain publications listed in this AD as of February 15, 2022.

ADDRESSES: For service information identified in this final rule, contact Bombardier Business Aircraft Customer Response Center, 400 Côte Vertu Road West, Dorval, Québec H4S 1Y9, Canada; 514–855–2999; email *ac.yul@aero.bombardier.com;* internet *https://www.bombardier.com.* You may view this service information at the FAA, Airworthiness Products Section, Operational Safety Branch, 2200 South 216th St., Des Moines, WA. For information on the availability of this material at the FAA, call 206–231–3195. It is also available on the internet at *https://www.regulations.gov* by searching for and locating Docket No. FAA–2021–0784.

Examining the AD Docket

You may examine the AD docket on the internet at *https://www.regulations.gov* by searching for and locating Docket No. FAA–2021–0784; or in person at Docket Operations between 9 a.m. and 5 p.m., Monday through Friday, except Federal holidays. The AD docket contains this final rule, any comments received, and other information. The address for Docket Operations is U.S. Department of Transportation, Docket Operations, M–30, West Building Ground Floor, Room W12–140, 1200 New Jersey Avenue SE, Washington, DC 20590.

FOR FURTHER INFORMATION CONTACT: Elizabeth Dowling, Aerospace Engineer, Mechanical Systems and Administrative Services Section, FAA, New York ACO Branch, 1600 Stewart Avenue, Suite 410, Westbury, NY 11590; telephone 516–228–7300; fax 516–794–5531; email *9-avs-nyaco-cos@faa.gov.*

SUPPLEMENTARY INFORMATION:

Background

Transport Canada Civil Aviation (TCCA), which is the aviation authority for Canada, has issued TCCA AD CF–2020–44, dated October 23, 2020 (referred to after this as the Mandatory Continuing Airworthiness Information, or the MCAI), to correct an unsafe condition for certain Bombardier, Inc., Model CL–600–1A11 (600), CL–600–2A12 (601), and CL–600–2B16 (601–3A, 601–3R, and 604 Variants) airplanes. You may examine the MCAI in the AD docket on the internet at *https://www.regulations.gov* by searching for and locating Docket No. FAA–2021–0784.

The FAA issued a notice of proposed rulemaking (NPRM) to amend 14 CFR part 39 by adding an AD that would apply to certain Bombardier, Inc., Model CL–600–1A11 (600), CL–600–2A12 (601), and CL–600–2B16 (601–3A, 601–3R, and 604 Variants) airplanes. The NPRM published in the **Federal Register** on September 14, 2021 (86 FR 51029). The NPRM was prompted by a determination that new or more restrictive airworthiness limitations are necessary. The NPRM proposed to require revising the existing maintenance or inspection program, as applicable, to incorporate new or more restrictive airworthiness limitations. The FAA is issuing this AD to address fatigue cracking and loss of structural integrity of the circumferential splice joint, which could result in reduced structural integrity of the airplane. See the MCAI for additional background information.

Comments

The FAA gave the public the opportunity to participate in developing this final rule. The FAA received no comments on the NPRM or on the determination of the cost to the public.

Conclusion

The FAA reviewed the relevant data and determined that air safety and the public interest require adopting this final rule as proposed, except for minor editorial changes. The FAA has determined that these minor changes:

- Are consistent with the intent that was proposed in the NPRM for addressing the unsafe condition; and
- Do not add any additional burden upon the public than was already proposed in the NPRM.

Related Service Information Under 1 CFR Part 51

The FAA reviewed the following Bombardier service information, which describes new or more restrictive airworthiness limitations (a special detailed inspection for cracking of the skin circumferential splice at fuselage station (FS) 559.00, between stringer (STR) 10L and STR10R). Note: The asterisk (or ''one star'') with the last three digits of the task number indicates that the task is an airworthiness limitation task.

- Bombardier Challenger 600 Time Limits/Maintenance Checks (TLMC), Product Support Publication (PSP) 605, Temporary Revision (TR) 5–163, dated April 30, 2020, which includes Task 53–30–00–165*, ''Skin Circumferential Splice at FS559.00, between STR10L and STR10R.''
- Bombardier Challenger 601 TLMC, PSP 601–5, TR 5–267, dated April 30, 2020, which includes Task 53–30–00–188*, ''Skin Circumferential Splice at FS559.00, between STR10L and STR10R.''
- Bombardier Challenger 601 TLMC, PSP 601A–5, TR 5–281, dated April 30, 2020, which includes Task 53–30–00–191*, ''Skin Circumferential Splice at FS559.00, between STR10L and STR10R.''
- Section 5–10–30, Airworthiness Limitation Items, Bombardier Challenger 604 TLMC, Publication No. CH 604 TLMC, Part 2, Revision 32, dated December 18, 2019, which includes Task 53–20–00–192*, ''Special Detailed Inspection of the Skin

Circumferential Splice at FS559.00, between Stringers10L and 10R.''

• Section 5–10–30, Airworthiness Limitation Items, Bombardier Challenger 605 TLMC, Publication No. CH 605 TLMC, Part 2, Revision 21, dated December 18, 2019, which includes Task 53–20–00–192*, ''Special Detailed Inspection of the Skin Circumferential Splice at FS559.00, between Stringers10L and 10R.''

• Section 5–10–30, Airworthiness Limitation Items, Bombardier Challenger 650 TLMC, Publication No. CH 650 TLMC, Part 2, Revision 8, dated December 18, 2019, which includes Task 53–20–00–192*, ''Special Detailed Inspection of the Skin Circumferential Splice at FS559.00, between Stringers10L and 10R.''

These documents are distinct since they apply to different airplane configurations. This service information is reasonably available because the interested parties have access to it through their normal course of business or by the means identified in the **ADDRESSES** section.

Costs of Compliance

The FAA estimates that this AD affects 463 airplanes of U.S. registry. The FAA estimates the following costs to comply with this AD:

The FAA has determined that revising the existing maintenance or inspection program takes an average of 90 work-hours per operator, although the agency recognizes that this number may vary from operator to operator. Since operators incorporate maintenance or inspection program changes for their affected fleet(s), the FAA has determined that a per-operator estimate is more accurate than a per-airplane estimate. Therefore, the agency estimates the average total cost per operator to be $7,650 (90 work-hours × $85 per work-hour).

Authority for This Rulemaking

Title 49 of the United States Code specifies the FAA's authority to issue rules on aviation safety. Subtitle I, section 106, describes the authority of the FAA Administrator. Subtitle VII: Aviation Programs, describes in more detail the scope of the Agency's authority.

The FAA is issuing this rulemaking under the authority described in Subtitle VII, Part A, Subpart III, Section 44701: General requirements. Under that section, Congress charges the FAA with promoting safe flight of civil aircraft in air commerce by prescribing regulations for practices, methods, and procedures the Administrator finds necessary for safety in air commerce. This regulation is within the scope of that authority because it addresses an unsafe condition that is likely to exist or develop on products identified in this rulemaking action.

Regulatory Findings

This AD will not have federalism implications under Executive Order 13132. This AD will not have a substantial direct effect on the States, on the relationship between the national government and the States, or on the distribution of power and responsibilities among the various levels of government.

For the reasons discussed above, I certify that this AD:

(1) Is not a ''significant regulatory action'' under Executive Order 12866,

(2) Will not affect intrastate aviation in Alaska, and

(3) Will not have a significant economic impact, positive or negative, on a substantial number of small entities under the criteria of the Regulatory Flexibility Act.

List of Subjects in 14 CFR Part 39

Air transportation, Aircraft, Aviation safety, Incorporation by reference, Safety.

Adoption of the Amendment

Accordingly, under the authority delegated to me by the Administrator, the FAA amends 14 CFR part 39 as follows:

PART 39—AIRWORTHINESS DIRECTIVES

■ 1. The authority citation for part 39 continues to read as follows:

Authority: 49 U.S.C. 106(g), 40113, 44701.

§ 39.13 [Amended]

■ 2. The FAA amends § 39.13 by adding the following new airworthiness directive:

2021–25–13 Bombardier, Inc.: Amendment 39–21857; Docket No. FAA–2021–0784; Project Identifier MCAI–2020–01455–T.

(a) Effective Date

This airworthiness directive (AD) is effective February 15, 2022.

(b) Affected ADs

None.

(c) Applicability

This AD applies to the Bombardier, Inc., airplanes, certificated in any category, identified in paragraphs (c)(1) through (3) of this AD.

(1) Model CL–600–1A11 (600) airplanes, serial numbers 1004 through 1085 inclusive.

(2) Model CL–600–2A12 (601) airplanes, serial numbers 3001 through 3066 inclusive.

(3) Model CL–600–2B16 (601–3A, 601–3R, and 604 Variants) airplanes, serial numbers 5001 through 5194 inclusive, 5301 through 5665 inclusive, 5701 through 6049 inclusive, and 6050 through 6999 inclusive.

(d) Subject

Air Transport Association (ATA) of America Code 05, Time Limits/Maintenance Checks.

(e) Reason

This AD was prompted by a determination that new or more restrictive airworthiness limitations are necessary. The FAA is issuing this AD to address fatigue cracking and loss of structural integrity of the circumferential splice joint, which could result in reduced structural integrity of the airplane.

(f) Compliance

Comply with this AD within the compliance times specified, unless already done.

(g) Maintenance or Inspection Program Revision

Within 60 days after the effective date of this AD, revise the existing maintenance or inspection program, as applicable, to incorporate the information specified in Figure 1 to paragraph (g) of this AD. The initial compliance time for doing the tasks is at the time specified in the applicable document specified in Figure 1 to paragraph (g) of this AD, or within 60 days after the effective date of this AD, whichever occurs later.

BILLING CODE 4910–13–P

Figure 1 to paragraph (g) –

Time Limits/Maintenance Checks (TLMC) Documents and Task Numbers

For Model–	Having Serial Numbers–	TLMC Document-	Task Numbers and Title-
CL-600-1A11 (600 variant) airplanes	1004 through 1085 inclusive	Bombardier Challenger 600 TLMC, PSP 605, Temporary Revision (TR) 5-163, dated April 30, 2020	53-30-00-165*, Skin Circumferential Splice at FS559.00, between STR10L and STR10R
CL-600-2A12 (601 variant) airplanes	3001 through 3066 inclusive	Bombardier Challenger 601 TLMC, PSP 601-5, TR 5-267, dated April 30, 2020	53-30-00-188*, Skin Circumferential Splice at FS559.00, between STR10L and STR10R
CL-600-2B16 (601-3A/3R variant) airplanes	5001 through 5194 inclusive	Bombardier Challenger 601 TLMC, PSP 601A-5, TR 5-281, dated April 30, 2020	53-30-00-191*, Skin Circumferential Splice at FS559.00, between STR10L and STR10R
CL-600-2B16 (604 variant) airplanes	5301 through 5665 inclusive	Section 5-10-30, Airworthiness Limitation Items, of the Bombardier Challenger 604 TLMC, Publication No. CH 604 TLMC, Part 2, Revision 32, dated December 18, 2019	53-20-00-192*, Special Detailed Inspection of the Skin Circumferential Splice at FS559.00, between Stringers 10L and 10R
CL-600-2B16 (604 variant) airplanes	5701 through 6049 inclusive	Section 5-10-30, Airworthiness Limitation Items, of the Bombardier Challenger 605 TLMC, Publication No. CH 605 TLMC, Part 2, Revision 21, dated December 18, 2019	53-20-00-192*, Special Detailed Inspection of the Skin Circumferential Splice at FS559.00, between Stringers 10L and 10R
CL-600-2B16 (604 variant) airplanes	6050 through 6999 inclusive	Section 5-10-30, Airworthiness Limitation Items, Bombardier Challenger 650 TLMC, Publication No. CH 650 TLMC, Part 2, Revision 8, dated December 18, 2019	53-20-00-192*, Special Detailed Inspection of the Skin Circumferential Splice at FS559.00, between Stringers 10L and 10R
Note: The asterisk (or "one star") with the last three digits of the task number indicates that the task is an airworthiness limitation task.			

BILLING CODE 4910–13–C

(h) No Alternative Actions or Intervals

After the existing maintenance or inspection program has been revised as required by paragraph (g) of this AD, no alternative actions (*e.g.,* inspections) or intervals, may be used unless the actions and intervals are approved as an alternative method of compliance (AMOC) in accordance with the procedures specified in paragraph (i)(1) of this AD.

(i) Other FAA AD Provisions

The following provisions also apply to this AD:

(1) *Alternative Methods of Compliance (AMOCs):* The Manager, New York ACO Branch, FAA, has the authority to approve AMOCs for this AD, if requested using the

procedures found in 14 CFR 39.19. In accordance with 14 CFR 39.19, send your request to your principal inspector or responsible Flight Standards Office, as appropriate. If sending information directly to the manager of the certification office, send it to ATTN: Program Manager, Continuing Operational Safety, FAA, New York ACO Branch, 1600 Stewart Avenue, Suite 410, Westbury, NY 11590; telephone 516–228–7300; fax 516–794–5531. Before using any approved AMOC, notify your appropriate principal inspector, or lacking a principal inspector, the manager of the responsible Flight Standards Office.

(2) *Contacting the Manufacturer:* For any requirement in this AD to obtain instructions from a manufacturer, the instructions must be accomplished using a method approved by the Manager, New York ACO Branch, FAA; or Transport Canada Civil Aviation (TCCA); or Bombardier, Inc.'s TCCA Design Approval Organization (DAO). If approved by the DAO, the approval must include the DAO-authorized signature.

(j) Related Information

(1) Refer to Mandatory Continuing Airworthiness Information (MCAI) TCCA AD CF–2020–44, dated October 23, 2020, for related information. This MCAI may be found in the AD docket on the internet at *https://www.regulations.gov* by searching for and locating Docket No. FAA–2021–0784.

(2) For more information about this AD, contact Elizabeth Dowling, Aerospace Engineer, Mechanical Systems and Administrative Services Section, FAA, New York ACO Branch, 1600 Stewart Avenue, Suite 410, Westbury, NY 11590; telephone 516–228–7300; fax 516–794–5531; email *9-avs-nyaco-cos@faa.gov.*

(k) Material Incorporated by Reference

(1) The Director of the Federal Register approved the incorporation by reference (IBR) of the service information listed in this paragraph under 5 U.S.C. 552(a) and 1 CFR part 51.

(2) You must use this service information as applicable to do the actions required by this AD, unless this AD specifies otherwise.

(i) Bombardier Challenger 600 Time Limits/Maintenance Checks (TLMC), Product Support Publication (PSP) 605, Temporary Revision (TR) 5–163, dated April 30, 2020.

(ii) Bombardier Challenger 601 TLMC, PSP 601–5, TR 5–267, dated April 30, 2020.

(iii) Bombardier Challenger 601 TLMC, PSP 601A–5, TR 5–281, dated April 30, 2020.

(iv) Section 5–10–30, Airworthiness Limitation Items, of the Bombardier Challenger 604 TLMC, Publication No. CH 604 TLMC, Part 2, Revision 32, dated December 18, 2019.

(v) Section 5–10–30, Airworthiness Limitation Items, of the Bombardier Challenger 605 TLMC, Publication No. CH 605 TLMC, Part 2, Revision 21, dated December 18, 2019.

(vi) Section 5–10–30, Airworthiness Limitation Items, of the Bombardier Challenger 650 TLMC, Publication No. CH 650 TLMC, Part 2, Revision 8, dated December 18, 2019.

(3) For service information identified in this AD, contact Bombardier Business Aircraft Customer Response Center, 400 Côte Vertu Road West, Dorval, Québec H4S 1Y9, Canada; 514–855–2999; email *ac.yul@aero.bombardier.com;* internet *https://www.bombardier.com.*

(4) You may view this service information at the FAA, Airworthiness Products Section, Operational Safety Branch, 2200 South 216th St., Des Moines, WA. For information on the availability of this material at the FAA, call 206–231–3195.

(5) You may view this service information that is incorporated by reference at the National Archives and Records Administration (NARA). For information on the availability of this material at NARA, email *fr.inspection@nara.gov,* or go to: *http://www.archives.gov/federal-register/cfr/ibr-locations.html.*

Issued on December 3, 2021.

Lance T. Gant,

Director, Compliance & Airworthiness Division, Aircraft Certification Service.

[FR Doc. 2021–28567 Filed 1–10–22; 8:45 am]

BILLING CODE 4910–13–P

DEPARTMENT OF TRANSPORTATION

Federal Aviation Administration

14 CFR Part 39

[Docket No. FAA–2021–0571; Project Identifier AD–2021–00101–T; Amendment 39–21835; AD 2021–24–14]

RIN 2120–AA64

Airworthiness Directives; The Boeing Company Airplanes

AGENCY: Federal Aviation Administration (FAA), DOT.

ACTION: Final rule.

SUMMARY: The FAA is adopting a new airworthiness directive (AD) for certain The Boeing Company Model 787–8, 787–9, and 787–10 airplanes. This AD was prompted by reports of damage to the thrust reverser (TR) translating sleeve secondary sliders due to contact between the slider and the slider track liner. This damage could reduce the fatigue life of the slider below its full design life for the TRs installed on certain engines. This AD requires determining the serial number of the TR and performing applicable on-condition actions; or replacing the TR with a serviceable TR. The FAA is issuing this AD to address the unsafe condition on these products.

DATES: This AD is effective February 15, 2022.

The Director of the Federal Register approved the incorporation by reference of a certain publication listed in this AD as of February 15, 2022.

ADDRESSES: For service information identified in this final rule, contact Boeing Commercial Airplanes, Attention: Contractual & Data Services (C&DS), 2600 Westminster Blvd., MC 110–SK57, Seal Beach, CA 90740–5600; telephone 562–797–1717; internet *https://www.myboeingfleet.com.* You may view this service information at the FAA, Airworthiness Products Section, Operational Safety Branch, 2200 South 216th St., Des Moines, WA. For information on the availability of this material at the FAA, call 206–231–3195. It is also available at *https://www.regulations.gov* by searching for and locating Docket No. FAA–2021–0571.

Examining the AD Docket

You may examine the AD docket at *https://www.regulations.gov* by searching for and locating Docket No. FAA–2021–0571; or in person at Docket Operations between 9 a.m. and 5 p.m., Monday through Friday, except Federal holidays. The AD docket contains this final rule, any comments received, and other information. The address for Docket Operations is U.S. Department of Transportation, Docket Operations, M–30, West Building Ground Floor, Room W12–140, 1200 New Jersey Avenue SE, Washington, DC 20590.

FOR FURTHER INFORMATION CONTACT: Tak Kobayashi, Aerospace Engineer, Propulsion Section, FAA, Seattle ACO Branch, 2200 South 216th St., Des Moines, WA 98198; phone and fax: 206–231–3553; email: *takahisa.kobayashi@faa.gov.*

SUPPLEMENTARY INFORMATION:

Background

The FAA issued a notice of proposed rulemaking (NPRM) to amend 14 CFR part 39 by adding an AD that would apply to certain The Boeing Company Model 787–8, 787–9, and 787–10 airplanes. The NPRM published in the **Federal Register** on August 9, 2021 (86 FR 43443). The NPRM was prompted by reports of damage to the TR translating sleeve secondary sliders due to contact between the slider and the slider track liner. This damage was found on TR sleeves installed only on certain engines. In the NPRM, the FAA proposed to require determining the serial number of the TR and performing applicable on-condition actions; or replacing the TR with a serviceable TR. The FAA is issuing this AD to address this damage, which could result in failure of the TR translating sleeve secondary slider and possible detachment of the outer cowl, which could strike the fuselage, causing damage to the airplane, and could result

in reduced control or performance of the airplane.

Discussion of Final Airworthiness Directive

Comments

The FAA received a comment from the Air Line Pilots Association, International (ALPA), who supported the NPRM without change.

The FAA received additional comments from one commenter, Boeing. The following presents the comments received on the NPRM and the FAA's response to each comment.

Request To Clarify Unsafe Condition

The Background section of the NPRM and paragraph (e) of the proposed AD stated that damage was found on TR sleeves installed only on certain engines. Boeing requested that the FAA clarify the description of the unsafe condition to state that this damage can result in an unsafe condition on TR sleeves installed on certain engines. Boeing added that, although this damage (gouging and grooving) is possible on pre- and post-mission improvement TRs installed on General Electric and Rolls-Royce engines, it was determined by the Boeing safety process that the damage could result in an unsafe condition only for the mission improvement TRs on Rolls-Royce engines.

The FAA agrees with Boeing's assertions, but disagrees with the proposed wording because it does not explain why the TRs installed on certain other engines are not affected by this safety issue. To clarify the description of the unsafe condition, the FAA has revised the **SUMMARY** and paragraph (e) of this AD to indicate that damage to the TR translating sleeve secondary sliders could reduce the fatigue life of the slider below its full design life for the TRs installed on certain engines.

Conclusion

The FAA reviewed the relevant data, considered any comments received, and determined that air safety requires adopting this AD as proposed. Except for minor editorial changes, and any other changes described previously, this AD is adopted as proposed in the NPRM. None of the changes will increase the economic burden on any operator.

Related Service Information Under 1 CFR Part 51

The FAA reviewed Boeing Alert Requirements Bulletin B787–81205–SB780043–00 RB, Issue 001, dated January 15, 2021. This service information specifies procedures for determining the serial number of the TR, and applicable on-condition actions; or replacing the TR with a serviceable TR. On-condition actions include reworking affected TR slider track liners; determining the serial number of the TR translating sleeves; checking to determine if certain TR translating sleeves have been installed on certain TRs; performing a detailed inspection of the secondary sliders of affected TR translating sleeves for cracking, grooving, gouging damage, and any existing repair; performing a dye penetrant inspection on any cracking, grooving or gouging damage, and any existing repair for cracking; and repairing any discrepancy found. This service information is reasonably available because the interested parties have access to it through their normal course of business or by the means identified in **ADDRESSES**.

Costs of Compliance

The FAA estimates that this AD affects 14 airplanes of U.S. registry. The FAA estimates the following costs to comply with this AD:

ESTIMATED COSTS FOR REQUIRED ACTIONS

Action	Labor cost	Parts cost	Cost per product	Cost on U.S. operators
Serial number inspection	6 work-hours × $85 per hour = $510	$0	$510	Up to $7,140.
Replacement (per T/R half)	12 work-hours × $85 per hour $1,020	0	1,020	Up to $14,280.

The FAA estimates the following costs to do the following on-condition actions. The FAA has no way of determining the number of aircraft that might need these on-condition actions:

ESTIMATED COSTS OF ON-CONDITION ACTIONS

Action	Labor cost	Parts cost	Cost per product
Repair	Up to 100 work-hours × $85 per hour = Up to $8,500.	$0	Up to $8,500.
Dye-penetrant inspection	Up to 4 work-hours × $85 per hour = Up to $340	0	Up to $340.
TR sleeve serial number check	1 work-hour × $85 per hour = $85	0	$85.
Check to determine if TR translating sleeve has been installed on certain TRs.	1 work-hour × $85 per hour = $85	0	$85.

The FAA has received no definitive data on which to base the cost estimates for the on-condition rework and detailed inspections specified in this AD.

The FAA has included all known costs in its cost estimate. According to the manufacturer, however, some or all of the costs of this AD may be covered under warranty, thereby reducing the cost impact on affected operators.

Authority for This Rulemaking

Title 49 of the United States Code specifies the FAA's authority to issue rules on aviation safety. Subtitle I, section 106, describes the authority of the FAA Administrator. Subtitle VII: Aviation Programs, describes in more detail the scope of the Agency's authority.

The FAA is issuing this rulemaking under the authority described in Subtitle VII, Part A, Subpart III, Section 44701: General requirements. Under that section, Congress charges the FAA with promoting safe flight of civil aircraft in air commerce by prescribing regulations for practices, methods, and

procedures the Administrator finds necessary for safety in air commerce. This regulation is within the scope of that authority because it addresses an unsafe condition that is likely to exist or develop on products identified in this rulemaking action.

Regulatory Findings

This AD will not have federalism implications under Executive Order 13132. This AD will not have a substantial direct effect on the States, on the relationship between the national government and the States, or on the distribution of power and responsibilities among the various levels of government.

For the reasons discussed above, I certify that this AD:

(1) Is not a ''significant regulatory action'' under Executive Order 12866,

(2) Will not affect intrastate aviation in Alaska, and

(3) Will not have a significant economic impact, positive or negative, on a substantial number of small entities under the criteria of the Regulatory Flexibility Act.

List of Subjects in 14 CFR Part 39

Air transportation, Aircraft, Aviation safety, Incorporation by reference, Safety.

The Amendment

Accordingly, under the authority delegated to me by the Administrator, the FAA amends 14 CFR part 39 as follows:

PART 39—AIRWORTHINESS DIRECTIVES

■ 1. The authority citation for part 39 continues to read as follows:

Authority: 49 U.S.C. 106(g), 40113, 44701.

§ 39.13 [Amended]

■ 2. The FAA amends § 39.13 by adding the following new airworthiness directive:

2021–24–14 The Boeing Company: Amendment 39–21835; Docket No. FAA–2021–0571; Project Identifier AD–2021–00101–T.

(a) Effective Date

This airworthiness directive (AD) is effective February 15, 2022.

(b) Affected ADs

None.

(c) Applicability

This AD applies to The Boeing Company Model 787–8, 787–9, and 787–10 airplanes, certificated in any category, powered by Rolls-Royce Trent 1000 engines.

(d) Subject

Air Transport Association (ATA) of America Code 78, Thrust Reverser.

(e) Unsafe Condition

This AD was prompted by reports of damage to the thrust reverser (TR) translating sleeve secondary sliders due to contact between the slider and the slider track liner. This damage could reduce the fatigue life of the slider below its full design life for the TRs installed on certain engines. The FAA is issuing this AD to address this damage, which could result in failure of the TR translating sleeve secondary slider and possible detachment of the outer cowl, which could strike the fuselage, causing damage to the airplane, and could result in reduced control or performance of the airplane.

(f) Compliance

Comply with this AD within the compliance times specified, unless already done.

(g) Required Actions

For airplanes with an original airworthiness certificate or original export certificate of airworthiness issued on or before the effective date of this AD: Except as specified by paragraph (h) of this AD; at the applicable times specified in the ''Compliance'' paragraph of Boeing Alert Requirements Bulletin B787–81205–SB780043–00 RB, Issue 001, dated January 15, 2021, do all applicable actions for Group 1, Configuration 1 airplanes as identified in, and in accordance with, the Accomplishment Instructions of Boeing Alert Requirements Bulletin B787–81205–SB780043–00 RB, Issue 001, dated January 15, 2021.

Note 1 to paragraph (g): Guidance for accomplishing the actions required by this AD can be found in Boeing Alert Service Bulletin B787–81205–SB780043–00, Issue 001, dated January 15, 2021, which is referred to in Boeing Alert Requirements Bulletin B787–81205–SB780043–00 RB, Issue 001, dated January 15, 2021.

(h) Exceptions to Service Information Specifications

(1) Where Boeing Alert Requirements Bulletin B787–81205–SB780043–00 RB, Issue 001, dated January 15, 2021, uses the phrase ''the issue 001 date of Requirements Bulletin B787–81205–SB780043–00 RB,'' this AD requires using ''the effective date of this AD.''

(2) Where Boeing Alert Requirements Bulletin B787–81205–SB780043–00 RB, Issue 001, dated January 15, 2021, specifies contacting Boeing for repair instructions or for instructions to address certain conditions: This AD requires doing the repair or doing the instructions using a method approved in accordance with the procedures specified in paragraph (j) of this AD.

(i) Parts Installation Limitations

(1) As of the applicable compliance time specified in paragraph (i)(1)(i) or (ii) of this AD, no person may install on any airplane a TR with serial number between 00110001 and 00312001 inclusive, on which all applicable inspections and corrective actions required by paragraph (g) of this AD have not been accomplished.

(i) For airplanes with an original airworthiness certificate or original export certificate of airworthiness issued on or before the effective date of this AD: After accomplishing the actions required by paragraph (g) of this AD.

(ii) For airplanes with an original airworthiness certificate or original export certificate of airworthiness issued after the effective date of this AD: As of the effective date of this AD.

(2) As of the applicable compliance time specified in paragraph (i)(2)(i) or (ii) of this AD, no person may install on any airplane a TR translating sleeve with serial number 00125001 and subsequent, on which all applicable inspections and corrective actions required by paragraph (g) of this AD have not been accomplished.

(i) For airplanes with an original airworthiness certificate or original export certificate of airworthiness issued on or before the effective date of this AD: After accomplishing the actions required by paragraph (g) of this AD.

(ii) For airplanes with an original airworthiness certificate or original export certificate of airworthiness issued after the effective date of this AD: As of the effective date of this AD.

(3) As of the effective date of this AD, no person may install a TR translating sleeve that was originally installed on any airplane with an original airworthiness certificate or original export certificate of airworthiness issued after the effective date of this AD; or a TR translating sleeve with serial number 00125001 and subsequent, on which all applicable inspections and corrective actions specified in Boeing Alert Requirements Bulletin B787–81205–SB780043–00 RB, Issue 001, dated January 15, 2021, have been accomplished; on any airplane with a TR with a serial number between 00110001 and 00312001 inclusive, unless all applicable inspections and corrective actions specified in Boeing Alert Requirements Bulletin B787–81205–SB780043–00 RB, Issue 001, dated January 15, 2021, have been accomplished on that TR, except as specified in paragraph (h)(2) of this AD.

(j) Alternative Methods of Compliance (AMOCs)

(1) The Manager, Seattle ACO Branch, FAA, has the authority to approve AMOCs for this AD, if requested using the procedures found in 14 CFR 39.19. In accordance with 14 CFR 39.19, send your request to your principal inspector or responsible Flight Standards Office, as appropriate. If sending information directly to the manager of the certification office, send it to the attention of the person identified in Related Information. Information may be emailed to: *9-ANM-Seattle-ACO-AMOC-Requests@faa.gov.*

(2) Before using any approved AMOC, notify your appropriate principal inspector, or lacking a principal inspector, the manager of the responsible Flight Standards Office.

(3) An AMOC that provides an acceptable level of safety may be used for any repair, modification, or alteration required by this AD if it is approved by The Boeing Company Organization Designation Authorization (ODA) that has been authorized by the

Manager, Seattle ACO Branch, FAA, to make those findings. To be approved, the repair method, modification deviation, or alteration deviation must meet the certification basis of the airplane, and the approval must specifically refer to this AD.

(k) Related Information

For more information about this AD, contact Tak Kobayashi, Aerospace Engineer, Propulsion Section, FAA, Seattle ACO Branch, 2200 South 216th St., Des Moines, WA 98198; phone and fax: 206–231–3553; email: *takahisa.kobayashi@faa.gov.*

(l) Material Incorporated by Reference

(1) The Director of the Federal Register approved the incorporation by reference (IBR) of the service information listed in this paragraph under 5 U.S.C. 552(a) and 1 CFR part 51.

(2) You must use this service information as applicable to do the actions required by this AD, unless the AD specifies otherwise.

(i) Boeing Alert Requirements Bulletin B787–81205–SB780043–00 RB, Issue 001, dated January 15, 2021.

(ii) [Reserved]

(3) For service information identified in this AD, contact Boeing Commercial Airplanes, Attention: Contractual & Data Services (C&DS), 2600 Westminster Blvd., MC 110–SK57, Seal Beach, CA 90740–5600; telephone 562–797–1717; internet *https://www.myboeingfleet.com.*

(4) You may view this service information at the FAA, Airworthiness Products Section, Operational Safety Branch, 2200 South 216th St., Des Moines, WA. For information on the availability of this material at the FAA, call 206–231–3195.

(5) You may view this service information that is incorporated by reference at the National Archives and Records Administration (NARA). For information on the availability of this material at NARA, *fr.inspection@nara.gov,* or go to: *https://www.archives.gov/federal-register/cfr/ibr-locations.html.*

Issued on November 17, 2021.

Lance T. Gant,

Director, Compliance & Airworthiness Division, Aircraft Certification Service.

[FR Doc. 2022–00038 Filed 1–10–22; 8:45 am]

BILLING CODE 4910–13–P

DEPARTMENT OF TRANSPORTATION

Federal Aviation Administration

14 CFR Part 39

[Docket No. FAA–2021–0658; Project Identifier MCAI–2020–01582–T; Amendment 39–21850; AD 2021–25–07]

RIN 2120–AA64

Airworthiness Directives; Bombardier, Inc., Airplanes

AGENCY: Federal Aviation Administration (FAA), Department of Transportation (DOT).

ACTION: Final rule.

SUMMARY: The FAA is adopting a new airworthiness directive (AD) for certain Bombardier, Inc., Model BD–100–1A10 airplanes. This AD was prompted by a discovery that a lockwire may not have been installed on the side stay actuator pin nut of the main landing gear (MLG). This AD requires inspecting the left-hand and right-hand MLG side stay actuator assembly pin nut for the presence of a lockwire, and installing a lockwire if necessary. The FAA is issuing this AD to address the unsafe condition on these products.

DATES: This AD is effective February 15, 2022.

The Director of the Federal Register approved the incorporation by reference of certain publications listed in this AD as of February 15, 2022.

ADDRESSES: For service information identified in this final rule, contact Bombardier, Inc., 200 Côte-Vertu Road West, Dorval, Québec H4S 2A3, Canada; North America toll-free telephone 1–866–538–1247 or direct-dial telephone 1–514–855–2999; email *ac.yul@aero.bombardier.com;* internet *https://www.bombardier.com.* You may view this service information at the FAA, Airworthiness Products Section, Operational Safety Branch, 2200 South 216th St., Des Moines, WA. For information on the availability of this material at the FAA, call 206–231–3195. It is also available on the internet at *https://www.regulations.gov* by searching for and locating Docket No. FAA–2021–0658.

Examining the AD Docket

You may examine the AD docket on the internet at *https://www.regulations.gov* by searching for and locating Docket No. FAA–2021–0658; or in person at Docket Operations between 9 a.m. and 5 p.m., Monday through Friday, except Federal holidays. The AD docket contains this final rule, any comments received, and other information. The address for Docket Operations is U.S. Department of Transportation, Docket Operations, M–30, West Building Ground Floor, Room W12–140, 1200 New Jersey Avenue SE, Washington, DC 20590.

FOR FURTHER INFORMATION CONTACT: Elizabeth Dowling, Aerospace Engineer, Mechanical Systems and Administrative Services Section, FAA, New York ACO Branch, 1600 Stewart Avenue, Suite 410, Westbury, NY 11590; telephone 516–228–7300; fax 516–794–5531; email *9-avs-nyaco-cos@faa.gov.*

SUPPLEMENTARY INFORMATION:

Background

Transport Canada Civil Aviation (TCCA), which is the aviation authority for Canada, has issued TCCA AD CF–2020–52, dated November 30, 2020 (also referred to after this as the Mandatory Continuing Airworthiness Information, or the MCAI), to correct an unsafe condition for certain Bombardier, Inc., Model BD–100–1A10 airplanes. You may examine the MCAI in the AD docket on the internet at *https://www.regulations.gov* by searching for and locating Docket No. FAA–2021–0658.

The FAA issued a notice of proposed rulemaking (NPRM) to amend 14 CFR part 39 by adding an AD that would apply to certain Bombardier, Inc., Model BD–100–1A10 airplanes. The NPRM published in the **Federal Register** on August 12, 2021 (86 FR 44314). The NPRM was prompted by a discovery that a lockwire may not have been installed on the side stay actuator pin nut of the MLG. The NPRM proposed to require inspecting the left-hand and right-hand MLG side stay actuator assembly pin nut for the presence of a lockwire, and installing a lockwire if necessary. The FAA is issuing this AD to address a possible missing lockwire, which could result in loss of the nut, and if undetected, lead to the collapse of the affected MLG. See the MCAI for additional background information.

Comments

The FAA gave the public the opportunity to participate in developing this final rule. The FAA received no comments on the NPRM or on the determination of the cost to the public.

Conclusion

The FAA reviewed the relevant data and determined that air safety and the public interest require adopting this final rule as proposed, except for minor editorial changes. The FAA has determined that these minor changes:

- Are consistent with the intent that was proposed in the NPRM for addressing the unsafe condition; and
- Do not add any additional burden upon the public than was already proposed in the NPRM.

Related Service Information Under 1 CFR Part 51

Bombardier has issued Service Bulletin 100–32–36, dated June 25, 2020; and Service Bulletin 350–32–012, dated June 25, 2020. This service information describes procedures for inspecting the left-hand and right-hand MLG side stay actuator assembly pin nut for presence of a lockwire and installing a lockwire. These documents

are distinct since they apply to different airplane configurations.

This service information is reasonably available because the interested parties have access to it through their normal course of business or by the means identified in the **ADDRESSES** section.

Costs of Compliance

The FAA estimates that this AD affects 623 airplanes of U.S. registry. The FAA estimates the following costs to comply with this AD:

ESTIMATED COSTS FOR REQUIRED ACTIONS

Labor cost	Parts cost	Cost per product	Cost on U.S. operators
1 work-hour × $85 per hour = $85	$0	$85	$52,955

The FAA estimates the following costs to do any necessary on-condition actions that would be required based on the results of any required actions. The FAA has no way of determining the number of aircraft that might need these on-condition actions:

ESTIMATED COSTS OF ON-CONDITION ACTIONS

Labor cost	Parts cost	Cost per product
1 work-hour × $85 per hour = $85	$1	$86

Authority for This Rulemaking

Title 49 of the United States Code specifies the FAA's authority to issue rules on aviation safety. Subtitle I, section 106, describes the authority of the FAA Administrator. Subtitle VII: Aviation Programs, describes in more detail the scope of the Agency's authority.

The FAA is issuing this rulemaking under the authority described in Subtitle VII, Part A, Subpart III, Section 44701: General requirements. Under that section, Congress charges the FAA with promoting safe flight of civil aircraft in air commerce by prescribing regulations for practices, methods, and procedures the Administrator finds necessary for safety in air commerce. This regulation is within the scope of that authority because it addresses an unsafe condition that is likely to exist or develop on products identified in this rulemaking action.

Regulatory Findings

This AD will not have federalism implications under Executive Order 13132. This AD will not have a substantial direct effect on the States, on the relationship between the national government and the States, or on the distribution of power and responsibilities among the various levels of government.

For the reasons discussed above, I certify that this AD:

(1) Is not a ''significant regulatory action'' under Executive Order 12866,

(2) Will not affect intrastate aviation in Alaska, and

(3) Will not have a significant economic impact, positive or negative, on a substantial number of small entities under the criteria of the Regulatory Flexibility Act.

List of Subjects in 14 CFR Part 39

Air transportation, Aircraft, Aviation safety, Incorporation by reference, Safety.

Adoption of the Amendment

Accordingly, under the authority delegated to me by the Administrator, the FAA amends 14 CFR part 39 as follows:

PART 39—AIRWORTHINESS DIRECTIVES

■ 1. The authority citation for part 39 continues to read as follows:

Authority: 49 U.S.C. 106(g), 40113, 44701.

§ 39.13 [Amended]

■ 2. The FAA amends § 39.13 by adding the following new airworthiness directive:

2021–25–07 Bombardier, Inc.: Amendment 39–21850; Docket No. FAA–2021–0658; Project Identifier MCAI–2020–01582–T.

(a) Effective Date

This airworthiness directive (AD) is effective February 15, 2022.

(b) Affected ADs

None.

(c) Applicability

This AD applies to Bombardier, Inc., Model BD–100–1A10 airplanes, certificated in any category, serial numbers 20003 through 20780 inclusive.

(d) Subject

Air Transport Association (ATA) of America Code 32, Landing gear.

(e) Unsafe Condition

This AD was prompted by a discovery that a lockwire may not have been installed on the side stay actuator pin nut of the main landing gear (MLG). The FAA is issuing this AD to address a possible missing lockwire, which could result in loss of the nut, and if undetected, lead to the collapse of the affected MLG.

(f) Compliance

Comply with this AD within the compliance times specified, unless already done.

(g) Required Actions

Within 12 months after the effective date of this AD: Inspect the left-hand (LH) and right-hand (RH) MLG side stay actuator assembly pin nuts for presence of a lockwire, in accordance with paragraph 2.B of the Accomplishment Instructions of the applicable service information specified in paragraphs (g)(1) and (2) of this AD. If the lockwire is missing: Before further flight, install a lockwire in accordance with paragraph 2.C of the Accomplishment Instructions of the applicable service information specified in paragraphs (g)(1) and (2) of this AD.

(1) Bombardier Service Bulletin 100–32–36, dated June 25, 2020.

(2) Bombardier Service Bulletin 350–32–012, dated June 25, 2020.

(h) Other FAA AD Provisions

The following provisions also apply to this AD:

(1) *Alternative Methods of Compliance (AMOCs):* The Manager, New York ACO Branch, FAA, has the authority to approve AMOCs for this AD, if requested using the procedures found in 14 CFR 39.19. In accordance with 14 CFR 39.19, send your request to your principal inspector or responsible Flight Standards Office, as appropriate. If sending information directly to the manager of the certification office, send it to ATTN: Program Manager, Continuing Operational Safety, FAA, New York ACO Branch, 1600 Stewart Avenue, Suite 410, Westbury, NY 11590; telephone 516–228–7300; fax 516–794–5531. Before using any approved AMOC, notify your appropriate principal inspector, or lacking a principal inspector, the manager of the responsible Flight Standards Office.

(2) *Contacting the Manufacturer:* For any requirement in this AD to obtain instructions from a manufacturer, the instructions must be accomplished using a method approved by the Manager, New York ACO Branch, FAA; or Transport Canada Civil Aviation (TCCA); or Bombardier, Inc.'s TCCA Design Approval Organization (DAO). If approved by

the DAO, the approval must include the DAO-authorized signature.

(i) Related Information

(1) Refer to Mandatory Continuing Airworthiness Information (MCAI) TCCA AD CF–2020–52, dated November 30, 2020, for related information. This MCAI may be found in the AD docket on the internet at *https://www.regulations.gov* by searching for and locating Docket No. FAA–2021–0658.

(2) For more information about this AD, contact Elizabeth Dowling, Aerospace Engineer, Mechanical Systems and Administrative Services Section, FAA, New York ACO Branch, 1600 Stewart Avenue, Suite 410, Westbury, NY 11590; telephone 516–228–7300; fax 516–794–5531; email *9-avs-nyaco-cos@faa.gov.*

(j) Material Incorporated by Reference

(1) The Director of the Federal Register approved the incorporation by reference (IBR) of the service information listed in this paragraph under 5 U.S.C. 552(a) and 1 CFR part 51.

(2) You must use this service information as applicable to do the actions required by this AD, unless this AD specifies otherwise.

(i) Bombardier Service Bulletin 100–32–36, dated June 25, 2020.

(ii) Bombardier Service Bulletin 350–32–012, dated June 25, 2020.

(3) For service information identified in this AD, contact Bombardier, Inc., 200 Côte-Vertu Road West, Dorval, Québec H4S 2A3, Canada; North America toll-free telephone 1–866–538–1247 or direct-dial telephone 1–514–855–2999; email *ac.yul@aero.bombardier.com;* internet *https://www.bombardier.com.*

(4) You may view this service information at the FAA, Airworthiness Products Section, Operational Safety Branch, 2200 South 216th St., Des Moines, WA. For information on the availability of this material at the FAA, call 206–231–3195.

(5) You may view this service information that is incorporated by reference at the National Archives and Records Administration (NARA). For information on the availability of this material at NARA, email *fr.inspection@nara.gov,* or go to: *https://www.archives.gov/federal-register/cfr/ibr-locations.html.*

Issued on December 2, 2021.

Lance T. Gant,

Director, Compliance & Airworthiness Division, Aircraft Certification Service.

[FR Doc. 2021–28597 Filed 1–10–22; 8:45 am]

BILLING CODE 4910–13–P

DEPARTMENT OF HOMELAND SECURITY

Coast Guard

33 CFR Part 165

[Docket Number USCG–2020–0531]

RIN 1625–AA11

Regulated Navigation Area; NW Natural PGM Site, Willamette River, Portland OR

AGENCY: Coast Guard, DHS.

ACTION: Final rule.

SUMMARY: The Coast Guard is establishing a regulated navigation area (RNA) at the NW Natural PGM Site on the Willamette River in Portland, OR. This action is necessary to preserve the integrity of an engineered sediment cap as part of an Oregon Department of Environmental Quality (DEQ) required remedial action. This regulation prohibits persons and vessels from activities in the RNA that could disturb or damage the engineered sediment cap unless authorized by the Captain of the Port Sector Columbia River or a designated representative.

DATES: This rule is effective February 10, 2022.

ADDRESSES: To view documents mentioned in this preamble as being available in the docket, go to *https://www.regulations.gov,* type USCG–2020–0531 in the ''SEARCH'' box and click ''SEARCH.'' Click on Open Docket Folder on the line associated with this rule.

FOR FURTHER INFORMATION CONTACT: If you have questions on this rule, call or email LCDR Sean Morrison, Waterways Management Division, Marine Safety Unit Portland, Coast Guard; telephone 503–240–9319, email *D13-SMB-MSUPortlandWWM@uscg.mil.*

SUPPLEMENTARY INFORMATION:

I. Table of Abbreviations

CFR Code of Federal Regulations
COTP Captain of the Port
DHS Department of Homeland Security
FR Federal Register
NPRM Notice of proposed rulemaking
PGM Portland Gas Manufacturing
RNA Regulated Navigation Area
§ Section
U.S.C. United States Code

II. Background Information and Regulatory History

On October 19, 2020, the Coast Guard published a notice of proposed rulemaking (NPRM) titled ''Regulated Navigation Area; NW Natural PGM Site, Willamette River, Portland, OR'' (85 FR 66292). There we stated why we issued the NPRM, and invited comments on our proposed regulatory action related to this regulated navigation area (RNA). During the comment period that ended November 18, 2020, we received 1 comment.

III. Legal Authority and Need for Rule

The Coast Guard is issuing this rule under authority in 46 U.S.C. 70034 (previously 33 U.S.C. 1231). The Coast Guard is establishing a RNA to protect the engineered sediment cap located at the NW Natural PGM Site on the Willamette River in Portland, OR. This sediment cap is part of an Oregon Department of Environmental Quality (DEQ) required remedial action. The engineered sediment cap is designed to be compatible with normal vessel operations, but could be damaged by other maritime activities including anchoring, dragging, dredging, grounding of vessels, deployment of barge spuds, etc. Such damage could disrupt the function or impact the effectiveness of the cap to contain the underlying contaminated sediment and soil in these areas.

The purpose of this rulemaking is to prevent disruption of the sediment cap which may result in hazardous conditions and harm to the marine environment. As such, this RNA is necessary to help ensure the sediment cap is protected and will do so by prohibiting maritime activities that could disturb or damage it.

IV. Discussion of Comments, Changes, and the Rule

As noted above, we received 1 comment on our NPRM published October 19, 2020. The commenter expressed support in establishing this RNA to protect the cap on sediment in the Willamette River, noting that if the sediment were to increase in the Willimette River there is potential for flooding and other negative effects on users of the waterway. Accordingly, there are no changes in the regulatory text of this rule from the proposed rule in the NPRM.

This rule establishes a RNA adjacent to the NW Natural PGM Site on the Willamette River in Portland, OR encompassing all waters above the sediment cap. The RNA prohibits activities which could disrupt or damage the sendiment cap on the river bed such as anchoring, dragging, dredging, trawling, or other related activities. The rule also specifies that operators who wish to engage in dredging, spudding, and vessel anchoring within the RNA must consult with Oregon DEQ and obtain prior

approval from the COTP to prevent exposure of buried contamination and/or damage to the engineered sediment cap.

Additionally, this rule allows vessels or persons engaged in activities associated with remediation efforts in the NW Natural PGM Site to engage in dredging and related activities, provided that the COTP is given advance notice of those activities by Oregon DEQ.

V. Regulatory Analyses

We developed this rule after considering numerous statutes and Executive orders related to rulemaking. Below we summarize our analyses based on a number of these statutes and Executive orders, and we discuss First Amendment rights of protestors.

A. Regulatory Planning and Review

Executive Orders 12866 and 13563 direct agencies to assess the costs and benefits of available regulatory alternatives and, if regulation is necessary, to select regulatory approaches that maximize net benefits. Executive Order 13771 directs agencies to control regulatory costs through a budgeting process.

This regulatory action determination is based on the fact that the RNA is limited in size and will not limit vessels from transiting or using the waters covered, except for specified activities that may damage the engineered sediment cap. Additionally, operators who wish to engage in dredging, spudding, and vessel anchoring within the RNA must consult with Oregon DEQ and obtain prior approval from the COTP to prevent exposure of buried contamination and/or damage to the remedial cap.

B. Impact on Small Entities

The Regulatory Flexibility Act of 1980, 5 U.S.C. 601–612, as amended, requires Federal agencies to consider the potential impact of regulations on small entities during rulemaking. The term ''small entities'' comprises small businesses, not-for-profit organizations that are independently owned and operated and are not dominant in their fields, and governmental jurisdictions with populations of less than 50,000. The Coast Guard received no comments from the Small Business Administration on this rulemaking. The Coast Guard certifies under 5 U.S.C. 605(b) that this rule will not have a significant economic impact on a substantial number of small entities.

While some owners or operators of vessels intending to transit the RNA may be small entities, for the reasons stated in section V.B above, this rule will not have a significant economic impact on any vessel owner or operator.

Under section 213(a) of the Small Business Regulatory Enforcement Fairness Act of 1996 (Pub. L. 104–121), we want to assist small entities in understanding this rule. If the rule would affect your small business, organization, or governmental jurisdiction and you have questions concerning its provisions or options for compliance, please call or email the person listed in the **FOR FURTHER INFORMATION CONTACT** section.

Small businesses may send comments on the actions of Federal employees who enforce, or otherwise determine compliance with, Federal regulations to the Small Business and Agriculture Regulatory Enforcement Ombudsman and the Regional Small Business Regulatory Fairness Boards. The Ombudsman evaluates these actions annually and rates each agency's responsiveness to small business. If you wish to comment on actions by employees of the Coast Guard, call 1–888–REG–FAIR (1–888–734–3247). The Coast Guard will not retaliate against small entities that question or complain about this rule or any policy or action of the Coast Guard.

C. Collection of Information

This rule will not call for a new collection of information under the Paperwork Reduction Act of 1995 (44 U.S.C. 3501–3520).

D. Federalism and Indian Tribal Governments

A rule has implications for federalism under Executive Order 13132, Federalism, if it has a substantial direct effect on the States, on the relationship between the National Government and the States, or on the distribution of power and responsibilities among the various levels of government. We have analyzed this rule under that Order and have determined that it is consistent with the fundamental federalism principles and preemption requirements described in Executive Order 13132.

Also, this rule does not have tribal implications under Executive Order 13175, Consultation and Coordination with Indian Tribal Governments, because it does not have a substantial direct effect on one or more Indian tribes, on the relationship between the Federal Government and Indian tribes, or on the distribution of power and responsibilities between the Federal Government and Indian tribes.

E. Unfunded Mandates Reform Act

The Unfunded Mandates Reform Act of 1995 (2 U.S.C. 1531–1538) requires Federal agencies to assess the effects of their discretionary regulatory actions. In particular, the Act addresses actions that may result in the expenditure by a State, local, or tribal government, in the aggregate, or by the private sector of $100,000,000 (adjusted for inflation) or more in any one year. Though this rule will not result in such an expenditure, we do discuss the effects of this rule elsewhere in this preamble.

F. Environment

We have analyzed this rule under Department of Homeland Security Directive 023–01, Rev. 1, associated implementing instructions, and Environmental Planning COMDTINST 5090.1 (series), which guide the Coast Guard in complying with the National Environmental Policy Act of 1969 (42 U.S.C. 4321–4370f), and have determined that this action is one of a category of actions that do not individually or cumulatively have a significant effect on the human environment. This rule involves the creation of a RNA that prohibits certain maritime activities to protect an engineered sediment cap. It is categorically excluded from further review under paragraph L60(a) of Appendix A, Table 1 of DHS Instruction Manual 023–01–001–01, Rev. 1. A Record of Environmental Consideration supporting this determination is available in the docket. For instructions on locating the docket, see the **ADDRESSES** section of this preamble.

G. Protest Activities

The Coast Guard respects the First Amendment rights of protesters. Protesters are asked to call or email the person listed in the **FOR FURTHER INFORMATION CONTACT** section to coordinate protest activities so that your message can be received without jeopardizing the safety or security of people, places or vessels.

List of Subjects in 33 CFR Part 165

Harbors, Marine safety, Navigation (water), Reporting and recordkeeping requirements, Security measures, Waterways.

For the reasons discussed in the preamble, the Coast Guard amends 33 CFR part 165 as follows:

PART 165—REGULATED NAVIGATION AREAS AND LIMITED ACCESS AREAS

■ 1. The authority citation for part 165 continues to read as follows:

Authority: 46 U.S.C. 70034, 70051; 33 CFR 1.05–1, 6.04–1, 6.04–6, and 160.5; Department of Homeland Security Delegation No. 00170.1, Revision No. 01.2.

■ 2. Add § 165.1343 to read as follows:

§ 165.1343 Regulated navigation area; NW Natural PGM Site, Willamette River, Portland, OR.

(a) *Location.* The following area is a regulated navigation area (RNA): All navigable waters of the Willamette River adjacent to the NW Natural Portland Gas Manufacturing (PGM) site, encompassed by a line connecting the following points beginning at 45°31′33.8″ N, 122°40′11.6″ W; thence to 45°31′33.9″ N, 122°40′11.2″ W; thence to 45°31′32.7″ N, 122°40′10.7″ W; thence to 45°31′32.9″ N, 122°40′09.4″ W; thence to 45°31′32.2″ N, 122°40′08.8″ W; thence to 45°31′32.2″ N, 122°40′07.9″ W; thence to 45°31′31.4″ N, 122°40′07.6″ W; thence to 45°31′30.9″ N, 122°40′10.7″ W; and along the shoreline back to the beginning point. These coordinates are based on North American Datum 83 (NAD 83). Geographically this location starts on the west bank of the Willamette River at approximately river mile 12.2, 100 yards south of the Steel Bridge.

(b) *Regulations.* In addition to the general RNA regulations in § 165.13, the following regulations apply to the RNA described in paragraph (a) of this section.

(1) Sediment disturbance activities including dredging, spudding, and vessel anchoring require advance consultation with the Oregon Department of Environmental Quality and obtain prior approval from the Coast Guard Captain of the Port Sector Columbia River (COTP) to prevent exposure of buried contamination and/or damage to the remedial cap. Contact Oregon DEQ at 503–229–5245, or alternatively, call 811 prior to any sediment disturbance activity. Any work within 10 feet of the seawall is prohibited unless there is advance consultation and approval by the City of Portland, DEQ and the COTP. All vessels and persons are prohibited from anchoring, dredging, laying cable, dragging, seining, bottom fishing, conducting salvage operations, or any other activity which could potentially disturb the riverbed in the designated area. Vessels may otherwise transit or navigate within this area.

(2) The regulations described in paragraph (b)(1) of this section do not apply to vessels or persons engaged in activities associated with remediation efforts in the NW Natural PGM Site, provided that the COTP is given advance notice of those activities by Oregon DEQ.

(c) *Contact information.* If you observe violations of the regulations in this section, you may notify the COTP by email, at *D13-SMB-MSUPortlandWWM@uscg.mil.*

Dated: November 24, 2021.

M.W. Bouboulis,

RADM, U.S. Coast Guard, Commander, Thirteenth Coast Guard District.

[FR Doc. 2022–00199 Filed 1–10–22; 8:45 am]

BILLING CODE 9110–04–P

ENVIRONMENTAL PROTECTION AGENCY

40 CFR Part 52

[EPA–R04–OAR–2020–0705; FRL–9235–02–R4]

Air Plan Approval; North Carolina: Mecklenburg General Provisions

AGENCY: Environmental Protection Agency (EPA).

ACTION: Final rule.

SUMMARY: The Environmental Protection Agency (EPA) is finalizing approval of a State Implementation Plan (SIP) revision to the Mecklenburg County portion of the North Carolina SIP, hereinafter referred to as the Mecklenburg County Local Implementation Plan (LIP). The revision was submitted through the North Carolina Division Air Quality (NCDAQ), on behalf of Mecklenburg County Air Quality (MCAQ), via a letter dated April 24, 2020, and was received by EPA on June 19, 2020. The revision updates several Mecklenburg County Air Pollution Control Ordinance (MCAPCO) rules incorporated into the LIP, including updating and revising certain definitions. EPA is approving these changes pursuant to the Clean Air Act (CAA or Act).

DATES: This rule is effective February 10, 2022.

ADDRESSES: EPA has established a docket for this action under Docket Identification No. EPA–R04–OAR–2020–0705. All documents in the docket are listed on the *www.regulations.gov* website. Although listed in the index, some information may not be publicly available, *i.e.,* Confidential Business Information or other information whose disclosure is restricted by statute. Certain other material, such as copyrighted material, is not placed on the internet and will be publicly available only in hard copy form. Publicly available docket materials are available either electronically through *www.regulations.gov* or in hard copy at the Air Regulatory Management Section, Air Planning and Implementation Branch, Air and Radiation Division, U.S. Environmental Protection Agency, Region 4, 61 Forsyth Street SW, Atlanta, Georgia 30303–8960. EPA requests that if at all possible, you contact the person listed in the **FOR FURTHER INFORMATION CONTACT** section to schedule your inspection. The Regional Office's official hours of business are Monday through Friday 8:30 a.m. to 4:30 p.m., excluding Federal holidays.

FOR FURTHER INFORMATION CONTACT: Pearlene Williams, Air Regulatory Management Section, Air Planning and Implementation Branch, Air and Radiation Division, U.S. Environmental Protection Agency, Region 4, 61 Forsyth Street SW, Atlanta, Georgia 30303–8960. The telephone number is (404) 562–9144. Ms. Williams can also be reached via electronic mail at *williams.pearlene@epa.gov.*

SUPPLEMENTARY INFORMATION:

I. Background

The Mecklenburg County LIP was originally submitted to EPA on June 14, 1990, and EPA approved the plan on May 2, 1991. *See* 56 FR 20140. Mecklenburg County prepared three submittals in order to modify the LIP for, among other things, general consistency with the North Carolina SIP.[1] The three submittals were submitted to EPA as follows: NCDAQ transmitted the October 25, 2017, submittal to EPA but withdrew it from review through a letter dated February 15, 2019. On April 24, 2020, NCDAQ resubmitted the October 25, 2017, update to EPA and also submitted the January 21, 2016, and January 14, 2019, updates. Due to an inconsistency with public notice at the local level, these submittals were withdrawn from EPA through a letter dated February 15, 2019. Mecklenburg County corrected this error, and NCDAQ submitted the updates in a revision dated April 24, 2020.[2]

II. What action is EPA taking?

On April 24, 2020, NCDAQ submitted to EPA changes to the MCAPCO to be incorporated into the LIP.[3] The January 14, 2019, portion of this submission includes changes to Rules 1.5102—*Definition of Terms* and 1.5111—*General Recordkeeping, Reporting and Monitoring Requirements* of MCAPCO

[1] The Mecklenburg County, North Carolina revision that is dated April 24, 2020, and received by EPA on June 19, 2020, is comprised of three previous submittals—one dated January 21, 2016; one dated October 25, 2017; and one dated January 14, 2019.

[2] The April 24, 2020, submittal was received by EPA on June 19, 2020.

[3] The April 24, 2020, submittal contains changes to other Mecklenburg LIP-approved rules that are not addressed in this notice. EPA will be acting on those rules in separate actions.

Article 1.0000—*Permitting Provisions for Air Pollution Sources, Rules and Operating Regulations for Acid Rain Sources, Title V and Toxic Air Pollutants.* The January 21, 2016 portion of this submission includes changes and updates to Rule 1.5104—*General Duties and Powers of the Director, With the Approval of the Board* of MCAPCO Article 1.0000.

On November 17, 2021, EPA published a Notice of Proposed Rulemaking (NPRM) proposing to approve the April 24, 2020, SIP revision regarding updates to Mecklenburg's general provisions and administrations rules. *See* 86 FR 64108. The NPRM provides additional detail regarding the background and rationale for EPA's action. Comments on the November 17, 2021, NPRM were due on or before December 17, 2021. EPA received no comments on the November 17, 2021, NPRM.

EPA is approving the incorporation of the aforementioned revisions to the MCAPCO rules into the Mecklenburg LIP because these rules add clarity to the LIP and are consistent with the CAA and applicable regulations.

III. Incorporation by Reference

In this document, EPA is finalizing regulatory text that includes incorporation by reference. In accordance with the requirements of 1 CFR 51.5, EPA is finalizing the incorporation by reference of MCAPCO Rules 1.5102—*Definition of Terms* and 1.5111—*General Recordkeeping, Reporting and Monitoring Requirements,* both which have an effective date of December 18, 2018; as well as Rule 1.5104—*General Duties and Powers of the Director, With the Approval of the Board,* with an effective date of December 15, 2015, into the Mecklenburg County portion of the North Carolina SIP. EPA has made, and will continue to make, these materials generally available through *www.regulations.gov* and at the EPA Region 4 office (please contact the person identified in the **FOR FURTHER INFORMATION CONTACT** section of this preamble for more information). Therefore, these materials have been approved by EPA for inclusion in the SIP, have been incorporated by reference by EPA into that plan, are fully federally enforceable under sections 110 and 113 of the CAA as of the effective date of the final rulemaking of EPA's approval, and will be incorporated by reference in the next update to the SIP compilation.[4]

[4] *See* 62 FR 27968 (May 22, 1997).

IV. Final Action

EPA is finalizing regulatory text that incorporates into the Mecklenburg County LIP revisions to MCAPCO Rules 1.5102—*Definition of Terms* and 1.5111—*General Recordkeeping, Reporting and Monitoring Requirements,* effective on December 18, 2018, as well as Rule 1.5104—*General Duties and Powers of the Director, With the Approval of the Board,* effective on December 15, 2015. EPA is taking final action to approve these changes because they are consistent with the CAA.

V. Statutory and Executive Order Reviews

Under the CAA, the Administrator is required to approve a SIP submission that complies with the provisions of the Act and applicable Federal regulations. *See* 42 U.S.C. 7410(k); 40 CFR 52.02(a). Thus, in reviewing SIP submissions, EPA's role is to approve state choices, provided they meet the criteria of the CAA. This action merely approves state law as meeting Federal requirements and does not impose additional requirements beyond those imposed by state law. For that reason, this action:

- Is not a significant regulatory action subject to review by the Office of Management and Budget under Executive Orders 12866 (58 FR 51735, October 4, 1993) and 13563 (76 FR 3821, January 21, 2011);
- Does not impose an information collection burden under the provisions of the Paperwork Reduction Act (44 U.S.C. 3501 *et seq.*);
- Is certified as not having a significant economic impact on a substantial number of small entities under the Regulatory Flexibility Act (5 U.S.C. 601 *et seq.*);
- Does not contain any unfunded mandate or significantly or uniquely affect small governments, as described in the Unfunded Mandates Reform Act of 1995 (Pub. L. 104–4);
- Does not have Federalism implications as specified in Executive Order 13132 (64 FR 43255, August 10, 1999);
- Is not an economically significant regulatory action based on health or safety risks subject to Executive Order 13045 (62 FR 19885, April 23, 1997);
- Is not a significant regulatory action subject to Executive Order 13211 (66 FR 28355, May 22, 2001);
- Is not subject to requirements of section 12(d) of the National Technology Transfer and Advancement Act of 1995 (15 U.S.C. 272 note) because application of those requirements would be inconsistent with the CAA; and
- Does not provide EPA with the discretionary authority to address, as appropriate, disproportionate human health or environmental effects, using practicable and legally permissible methods, under Executive Order 12898 (59 FR 7629, February 16, 1994).

The SIP is not approved to apply on any Indian reservation land or in any other area where EPA or an Indian tribe has demonstrated that a tribe has jurisdiction. In those areas of Indian country, the rule does not have tribal implications as specified by Executive Order 13175 (65 FR 67249, November 9, 2000), nor will it impose substantial direct costs on tribal governments or preempt tribal law.

The Congressional Review Act, 5 U.S.C. 801 *et seq.,* as added by the Small Business Regulatory Enforcement Fairness Act of 1996, generally provides that before a rule may take effect, the agency promulgating the rule must submit a rule report, which includes a copy of the rule, to each House of the Congress and to the Comptroller General of the United States. EPA will submit a report containing this action and other required information to the U.S. Senate, the U.S. House of Representatives, and the Comptroller General of the United States prior to publication of the rule in the **Federal Register**. A major rule cannot take effect until 60 days after it is published in the **Federal Register**. This action is not a ''major rule'' as defined by 5 U.S.C. 804(2).

Under section 307(b)(1) of the CAA, petitions for judicial review of this action must be filed in the United States Court of Appeals for the appropriate circuit by March 14, 2022. Filing a petition for reconsideration by the Administrator of this final rule does not affect the finality of this action for the purposes of judicial review nor does it extend the time within which a petition for judicial review may be filed, and shall not postpone the effectiveness of such rule or action. This action may not be challenged later in proceedings to enforce its requirements. *See* section 307(b)(2).

List of Subjects in 40 CFR Part 52

Environmental protection, Air pollution control, Incorporation by reference, Intergovernmental relations, Reporting, and recordkeeping requirements.

Dated: December 29, 2021.

Daniel Blackman,

Regional Administrator, Region 4.

For the reasons stated in the preamble, EPA amends 40 CFR part 52 as follows:

PART 52—APPROVAL AND PROMULGATION OF IMPLEMENTATION PLANS

■ 1. The authority citation for part 52 continues to read as follows:

Authority: 42 U.S.C. 7401 *et seq.*

Subpart II—North Carolina

■ 2. In § 52.1770, in paragraph (c), amend table (3) by removing the entries for ''Section 1.5102,'' ''Section 1.5104,'' and ''Section 1.5111,'' and adding ''Rule 1.5102,'' ''Rule 1.5104,'' and ''Rule 1.5111,'' in their place to read as follows:

§ 52.1770 Identification of plan.

* * * * *

(c) * * *

(3) EPA APPROVED MECKLENBURG COUNTY REGULATIONS

State citation	Title/subject	State effective date	EPA approval date	Explanation
*	*	*	*	*
Article 1.0000	**Permitting Provisions for Air Pollution Sources, Rules and Operating Regulations for Acid Rain Sources, Title V and Toxic Air Pollutants**			
Section 1.5100	**General Provisions and Administrations**			
*	*	*	*	*
Rule 1.5102	Definition of Terms	12/18/2018	1/11/2022, [Insert citation of publication].	
*	*	*	*	*
Rule 1.5104	General Duties and Powers of the Director, With the Approval of the Board.	12/15/2015	1/11/2022, [Insert citation of publication].	
Rule 1.5111	General Recordkeeping, Reporting and Monitoring Requirements.	12/18/2018	1/11/2022, [Insert citation of publication].	
*	*	*	*	*

* * * * *

[FR Doc. 2022–00029 Filed 1–10–22; 8:45 am]

BILLING CODE 6560–50–P

ENVIRONMENTAL PROTECTION AGENCY

40 CFR Part 52

[EPA–R04–OAR–2021–0430; FRL–9060–02–R4]

Air Plan Approval; North Carolina; Minor Revisions to Cotton Ginning Operations Rule

AGENCY: Environmental Protection Agency (EPA).

ACTION: Final rule.

SUMMARY: The Environmental Protection Agency (EPA) is approving a revision to the North Carolina State Implementation Plan (SIP) submitted by the State of North Carolina Department of Environmental Quality, Division of Air Quality, via a letter dated April 13, 2021, and received by EPA on April 14, 2021. This revision contains minor clarifying and typographical edits to North Carolina's cotton ginning operations rule. EPA is finalizing approval of these changes pursuant to the Clean Air Act (CAA or Act).

DATES: This rule is effective February 10, 2022.

ADDRESSES: EPA has established a docket for this action under Docket Identification No. EPA–R04–OAR–2021–0430. All documents in the docket are listed on the *www.regulations.gov* website. Although listed in the index, some information may not be publicly available, *i.e.,* Confidential Business Information or other information whose disclosure is restricted by statute. Certain other material, such as copyrighted material, is not placed on the internet and will be publicly available only in hard copy form. Publicly available docket materials are available either electronically through *www.regulations.gov* or in hard copy at the Air Regulatory Management Section, Air Planning and Implementation Branch, Air and Radiation Division, U.S. Environmental Protection Agency, Region 4, 61 Forsyth Street SW, Atlanta, Georgia 30303–8960. EPA requests that if at all possible, you contact the person listed in the **FOR FURTHER INFORMATION CONTACT** section to schedule your inspection. The Regional Office's official hours of business are Monday through Friday 8:30 a.m. to 4:30 p.m., excluding Federal holidays.

FOR FURTHER INFORMATION CONTACT: Pearlene Williams, Air Regulatory Management Section, Air Planning and Implementation Branch, Air and Radiation Division, U.S. Environmental Protection Agency, Region 4, 61 Forsyth Street SW, Atlanta, Georgia 30303–8960. The telephone number is (404) 562–9144. Ms. Williams can also be reached via electronic mail at *williams.pearlene@epa.gov.*

SUPPLEMENTARY INFORMATION:

I. Overview

On April 14, 2021, the State of North Carolina submitted changes to the North Carolina SIP for EPA approval. EPA is approving these changes to 15A North Carolina Administrative Code (NCAC) Subchapter 02D,[1] Rule .0542—*Control of Particulate Emissions from Cotton Ginning Operations* which establishes control requirements for particulate emissions from cotton ginning operations.

II. Analysis of North Carolina's SIP Revision

North Carolina's SIP revision contains minor clarifying and typographical edits to the text of Rule .0542.[2] Details regarding the background for these changes may be found in the notice of

[1] In the table of North Carolina regulations federally approved into the SIP at 40 CFR 52.1770(c), 15A NCAC 02D is referred to as ''Subchapter 2D Air Pollution Control Requirements.''

[2] See North Carolina's April 14, 2021, SIP revision at pp. 82–86 (of the pdf file available in the docket for this rulemaking) to review a redline version of the rule showing all changes.

proposed rulemaking that published September 24, 2021 (86 FR 53024). The comment period for this rulemaking closed on October 25, 2021. No comments were received. EPA has determined that these changes do not interfere with attainment and maintenance of the national ambient air quality standards or any other applicable requirement of the Act because they are minor in nature. For these reasons, EPA is approving the changes to this rule.

III. Incorporation by Reference

In this document, EPA is finalizing rule regulatory text that includes incorporation by reference. In accordance with the requirements of 1 CFR 51.5, EPA is proposing to incorporate by reference 15A NCAC Subchapter 02D, Rule .0542—*Control of Particulate Emissions from Cotton Ginning Operations,* with a state-effective date of November 1, 2020. These changes are approved to make minor clarifying and typographical edits to the rule. EPA has made, and will continue to make, these materials generally available through *www.regulations.gov* and at the EPA Region 4 office (please contact the person identified in the **FOR FURTHER INFORMATION CONTACT** section of this preamble for more information).

IV. Final Action

EPA is finalizing the aforementioned revisions to Rule .0542—*Control of Particulate Emissions from Cotton Ginning Operations.* EPA is approving these changes because they are consistent with the Clean Air Act (CAA).

V. Statutory and Executive Order Reviews

Under the CAA, the Administrator is required to approve a SIP submission that complies with the provisions of the Act and applicable Federal regulations. *See* 42 U.S.C. 7410(k); 40 CFR 52.02(a). Thus, in reviewing SIP submissions, EPA's role is to approve state choices, provided that they meet the criteria of the CAA. This action merely approves state law as meeting Federal requirements and does not impose additional requirements beyond those imposed by state law. For that reason, this action:

- Is not a significant regulatory action subject to review by the Office of Management and Budget under Executive Orders 12866 (58 FR 51735, October 4, 1993) and 13563 (76 FR 3821, January 21, 2011);
- Does not impose an information collection burden under the provisions of the Paperwork Reduction Act (44 U.S.C. 3501 *et seq.*);
- Is certified as not having a significant economic impact on a substantial number of small entities under the Regulatory Flexibility Act (5 U.S.C. 601 *et seq.*);
- Does not contain any unfunded mandate or significantly or uniquely affect small governments, as described in the Unfunded Mandates Reform Act of 1995 (Pub. L. 104–4);
- Does not have Federalism implications as specified in Executive Order 13132 (64 FR 43255, August 10, 1999);
- Is not an economically significant regulatory action based on health or safety risks subject to Executive Order 13045 (62 FR 19885, April 23, 1997);
- Is not a significant regulatory action subject to Executive Order 13211 (66 FR 28355, May 22, 2001);
- Is not subject to requirements of Section 12(d) of the National Technology Transfer and Advancement Act of 1995 (15 U.S.C. 272 note) because application of those requirements would be inconsistent with the CAA; and
- Does not provide EPA with the discretionary authority to address, as appropriate, disproportionate human health or environmental effects, using practicable and legally permissible methods, under Executive Order 12898 (59 FR 7629, February 16, 1994).

The SIP is not approved to apply on any Indian reservation land or in any other area where EPA or an Indian tribe has demonstrated that a tribe has jurisdiction. In those areas of Indian country, the rule does not have tribal implications as specified by Executive Order 13175 (65 FR 67249, November 9, 2000), nor will it impose substantial direct costs on tribal governments or preempt tribal law.

The Congressional Review Act, 5 U.S.C. 801 *et seq.,* as added by the Small Business Regulatory Enforcement Fairness Act of 1996, generally provides that before a rule may take effect, the agency promulgating the rule must submit a rule report, which includes a copy of the rule, to each House of the Congress and to the Comptroller General of the United States. EPA will submit a report containing this action and other required information to the U.S. Senate, the U.S. House of Representatives, and the Comptroller General of the United States prior to publication of the rule in the **Federal Register**. A major rule cannot take effect until 60 days after it is published in the **Federal Register**. This action is not a ''major rule'' as defined by 5 U.S.C. 804(2).

Under section 307(b)(1) of the CAA, petitions for judicial review of this action must be filed in the United States Court of Appeals for the appropriate circuit by March 14, 2022. Filing a petition for reconsideration by the Administrator of this final rule does not affect the finality of this action for the purposes of judicial review nor does it extend the time within which a petition for judicial review may be filed, and shall not postpone the effectiveness of such rule or action. This action may not be challenged later in proceedings to enforce its requirements. *See* section 307(b)(2).

List of Subjects in 40 CFR Part 52

Environmental protection, Air pollution control, Carbon monoxide, Incorporation by reference, Intergovernmental relations, Lead, Nitrogen dioxide, Ozone, Particulate matter, Sulfur oxides, Volatile organic compounds.

Dated: December 29, 2021.

Daniel Blackman,

Regional Administrator, Region 4.

For the reasons stated in the preamble, the EPA amends 40 CFR part 52 as follows:

PART 52—APPROVAL AND PROMULGATION OF IMPLEMENTATION PLANS

■ 1. The authority citation for part 52 continues to read as follows:

Authority: 42 U.S.C. 7401 *et seq.*

Subpart II—North Carolina

■ 2. In § 52.1770, in paragraph (c), amend table 1, under ''Section .0500 Emission Control Standards,'' by removing the entry for ''Section .0542'' and adding an entry for ''Rule .0542'' in its place to read as follows:

§ 52.1770 Identification of plan.

* * * * *

(c) * * *

(1) EPA APPROVED NORTH CAROLINA REGULATIONS

State citation	Title/subject	State effective date	EPA approval date	Explanation
Subchapter 2D Air Pollution Control Requirements				
*	*	*	*	*
Section .0500 Emission Control Standards				
*	*	*	*	*
Rule .0542	Control of Particulate Emissions from Cotton Ginning Operations.	11/1/2020	1/11/2022, [Insert citation of publication].	
*	*	*	*	*

* * * * *

[FR Doc. 2022–00030 Filed 1–10–22; 8:45 am]

BILLING CODE 6560–50–P

ENVIRONMENTAL PROTECTION AGENCY

40 CFR Part 180

[EPA–HQ–OPP–2021–0335; FRL–9231–01–OCSPP]

Acetic Acid Ethenyl Ester, Polymer With Ethene, N-(hydroxymethyl)-2-propenamide, and 2-propenamide; (AM–E–NMA–VA); Tolerance Exemption

AGENCY: Environmental Protection Agency (EPA).

ACTION: Final rule.

SUMMARY: This regulation establishes an exemption from the requirement of a tolerance for residues of Acetic acid ethenyl ester, polymer with ethene, N-(hydroxymethyl)-2-propenamide, and 2-propenamide; (AM–E–NMA–VA) when used as an inert ingredient in a pesticide chemical formulation. Celanese Corporation Ltd., submitted a petition to EPA under the Federal Food, Drug, and Cosmetic Act (FFDCA), requesting an exemption from the requirement of a tolerance. This regulation eliminates the need to establish a maximum permissible level for residues of Acetic acid ethenyl ester, polymer with ethene, N-(hydroxymethyl)-2-propenamide, and 2-propenamide (AM–E–NMA–VA) on food or feed commodities.

DATES: This regulation is effective January 11, 2022. Objections and requests for hearings must be received on or before March 14, 2022, and must be filed in accordance with the instructions provided in 40 CFR part 178 (see also Unit I.C. of the **SUPPLEMENTARY INFORMATION**).

ADDRESSES: The docket for this action, identified by docket identification (ID) number [EPA–HQ–OPP–2021–0335], is available at *https://www.regulations.gov* or at the Office of Pesticide Programs Regulatory Public Docket (OPP Docket) in the Environmental Protection Agency Docket Center (EPA/DC), West William Jefferson Clinton Bldg., Rm. 3334, 1301 Constitution Ave. NW, Washington, DC 20460–0001. The Public Reading Room is open from 8:30 a.m. to 4:30 p.m., Monday through Friday, excluding legal holidays. The telephone number for the Public Reading Room is (202) 566–1744, and the telephone number for the OPP Docket is (703) 305–5805.

Due to the public health concerns related to COVID–19, the EPA Docket Center (EPA/DC) and Reading Room is closed to visitors with limited exceptions. The staff continues to provide remote customer service via email, phone, and webform. For the latest status information on EPA/DC services and docket access, visit *https://www.epa.gov/dockets.*

FOR FURTHER INFORMATION CONTACT: Marietta Echeverria, Registration Division (7505P), Office of Pesticide Programs, Environmental Protection Agency, 1200 Pennsylvania Ave. NW, Washington, DC 20460–0001; main telephone number: (703) 305–7090; email address: *RDFRNotices@epa.gov.*

SUPPLEMENTARY INFORMATION:

I. General Information

A. Does this action apply to me?

You may be potentially affected by this action if you are an agricultural producer, food manufacturer, or pesticide manufacturer. The following list of North American Industrial Classification System (NAICS) codes is not intended to be exhaustive, but rather provides a guide to help readers determine whether this document applies to them. Potentially affected entities may include:

- Crop production (NAICS code 111).
- Animal production (NAICS code 112).
- Food manufacturing (NAICS code 311).
- Pesticide manufacturing (NAICS code 32532).

B. How can I get electronic access to other related information?

You may access a frequently updated electronic version of 40 CFR part 180 through the Office of the Federal Register's e-CFR site at *https://www.ecfr.gov/current/title-40.*

C. Can I file an objection or hearing request?

Under FFDCA section 408(g), 21 U.S.C. 346a, any person may file an objection to any aspect of this regulation and may also request a hearing on those objections. You must file your objection or request a hearing on this regulation in accordance with the instructions provided in 40 CFR part 178. To ensure proper receipt by EPA, you must identify docket ID number [EPA–HQ–OPP–2021–0335] in the subject line on the first page of your submission. All objections and requests for a hearing must be in writing and must be received by the Hearing Clerk on or before March 14, 2022. Addresses for mail and hand delivery of objections and hearing requests are provided in 40 CFR 178.25(b).

In addition to filing an objection or hearing request with the Hearing Clerk as described in 40 CFR part 178, please submit a copy of the filing (excluding any Confidential Business Information (CBI)) for inclusion in the public docket. Information not marked confidential pursuant to 40 CFR part 2 may be disclosed publicly by EPA without prior notice. Submit the non-CBI copy of your objection or hearing request, identified

by docket ID number [EPA–HQ–OPP–2021–0335], by one of the following methods.

• *Federal eRulemaking Portal: https://www.regulations.gov.* Follow the online instructions for submitting comments. Do not submit electronically any information you consider to be CBI or other information whose disclosure is restricted by statute.

• *Mail:* OPP Docket, Environmental Protection Agency Docket Center (EPA/DC), (28221T), 1200 Pennsylvania Ave. NW, Washington, DC 20460–0001.

• *Hand Delivery:* To make special arrangements for hand delivery or delivery of boxed information, please follow the instructions at *https://www.epa.gov/dockets/contacts.html.*

Additional instructions on commenting or visiting the docket, along with more information about dockets generally, is available at *https://www.epa.gov/dockets.*

II. Background and Statutory Findings

In the **Federal Register** of October 21, 2021 (86 FR 58239) (FRL–8793–04–OSCPP) [EPA–HQ–OPP–2021–0088], EPA issued a document pursuant to FFDCA section 408, 21 U.S.C. 346a, announcing the receipt of a pesticide petition (PP IN–11552) filed by Celanese Corporation Ltd, 222 W Las Colinas Blvd., Suite 900N, Irving, TX 75039. The petition requested that 40 CFR 180.960 be amended by establishing an exemption from the requirement of a tolerance for residues of Acetic acid ethenyl ester, polymer with ethene, N-(hydroxymethyl)-2-propenamide, and 2-propenamide (AM–E–NMA–VA), CAS Reg. No. 49603–78–3. That document included a summary of the petition prepared by the petitioner and solicited comments on the petitioner's request. The Agency did not receive any comments.

Section 408(c)(2)(A)(i) of FFDCA allows EPA to establish an exemption from the requirement for a tolerance (the legal limit for a pesticide chemical residue in or on a food) only if EPA determines that the exemption is ''safe.'' Section 408(c)(2)(A)(ii) of FFDCA defines ''safe'' to mean that ''there is a reasonable certainty that no harm will result from aggregate exposure to the pesticide chemical residue, including all anticipated dietary exposures and all other exposures for which there is reliable information.'' This includes exposure through drinking water and use in residential settings but does not include occupational exposure. Section 408(b)(2)(C) of FFDCA requires EPA to give special consideration to exposure of infants and children to the pesticide chemical residue in establishing an exemption from the requirement of a tolerance and to ''ensure that there is a reasonable certainty that no harm will result to infants and children from aggregate exposure to the pesticide chemical residue . . .'' and specifies factors EPA is to consider in establishing an exemption.

III. Risk Assessment and Statutory Findings

EPA establishes exemptions from the requirement of a tolerance only in those cases where it can be shown that the risks from aggregate exposure to pesticide chemical residues under reasonably foreseeable circumstances will pose no appreciable risks to human health. In order to determine the risks from aggregate exposure to pesticide inert ingredients, the Agency considers the toxicity of the inert in conjunction with possible exposure to residues of the inert ingredient through food, drinking water, and through other exposures that occur as a result of pesticide use in residential settings. If EPA is able to determine that a finite tolerance is not necessary to ensure that there is a reasonable certainty that no harm will result from aggregate exposure to the inert ingredient, an exemption from the requirement of a tolerance may be established.

Consistent with FFDCA section 408(b)(2)(D), EPA has reviewed the available scientific data and other relevant information in support of this action and considered its validity, completeness and reliability and the relationship of this information to human risk. EPA has also considered available information concerning the variability of the sensitivities of major identifiable subgroups of consumers, including infants and children. In the case of certain chemical substances that are defined as polymers, the Agency has established a set of criteria to identify categories of polymers expected to present minimal or no risk. The definition of a polymer is given in 40 CFR 723.250(b) and the exclusion criteria for identifying these low-risk polymers are described in 40 CFR 723.250(d). Acetic acid ethenyl ester, polymer with ethene, N-(hydroxymethyl)-2-propenamide, and 2-propenamide (AM–E–NMA–VA) conforms to the definition of a polymer given in 40 CFR 723.250(b) and meets the following criteria that are used to identify low-risk polymers.

1. The polymer is not a cationic polymer nor is it reasonably anticipated to become a cationic polymer in a natural aquatic environment.

2. The polymer does contain as an integral part of its composition the atomic elements carbon, hydrogen, and oxygen.

3. The polymer does not contain as an integral part of its composition, except as impurities, any element other than those listed in 40 CFR 723.250(d)(2)(ii).

4. The polymer is neither designed nor can it be reasonably anticipated to substantially degrade, decompose, or depolymerize.

5. The polymer is manufactured or imported from monomers and/or reactants that are already included on the Toxic Substances Control Act (TSCA) Chemical Substance Inventory or manufactured under an applicable TSCA section 5 exemption.

6. The polymer is not a water absorbing polymer with a number average molecular weight (MW) greater than or equal to 10,000 daltons.

Additionally, the polymer also meets as required the following exemption criteria specified in 40 CFR 723.250(e).

7. The polymer's number average MW of 5500 is greater than 1,000 and less than 10,000 daltons. The polymer contains less than 10% oligomeric material below MW 500 and less than 25% oligomeric material below MW 1,000, and the polymer does not contain any reactive functional groups.

Thus, AM–E–NMA–VA meets the criteria for a polymer to be considered low risk under 40 CFR 723.250. Based on its conformance to the criteria in this unit, no mammalian toxicity is anticipated from dietary, inhalation, or dermal exposure to AM–E–NMA–VA.

8. The polymer does not contain certain perfluoroalkyl moieties consisting of a CF3- or longer chain length as listed in 40 CFR 723.250(d)(6).

IV. Aggregate Exposures

For the purposes of assessing potential exposure under this exemption, EPA considered that AM–E–NMA–VA could be present in all raw and processed agricultural commodities and drinking water, and that non-occupational non-dietary exposure was possible. The number average MW of AM–E–NMA–VA is 5,500 daltons. Generally, a polymer of this size would be poorly absorbed through the intact gastrointestinal tract or through intact human skin. Since AM–E–NMA–VA conform to the criteria that identify a low-risk polymer, there are no concerns for risks associated with any potential exposure scenarios that are reasonably foreseeable. The Agency has determined that a tolerance is not necessary to protect the public health.

V. Cumulative Effects From Substances With a Common Mechanism of Toxicity

Section 408(b)(2)(D)(v) of FFDCA requires that, when considering whether to establish, modify, or revoke a tolerance, the Agency consider ''available information'' concerning the cumulative effects of a particular pesticide's residues and ''other substances that have a common mechanism of toxicity.''

EPA has not found AM–E–NMA–VA to share a common mechanism of toxicity with any other substances, and AM–E–NMA–VA does not appear to produce a toxic metabolite produced by other substances. For the purposes of this tolerance action, therefore, EPA has assumed that AM–E–NMA–VA does not have a common mechanism of toxicity with other substances. For information regarding EPA's efforts to determine which chemicals have a common mechanism of toxicity and to evaluate the cumulative effects of such chemicals, see EPA's website at *https://www.epa.gov/pesticides/cumulative.*

VI. Additional Safety Factor for the Protection of Infants and Children

Section 408(b)(2)(C) of FFDCA provides that EPA shall apply an additional tenfold margin of safety for infants and children in the case of threshold effects to account for prenatal and postnatal toxicity and the completeness of the data base unless EPA concludes that a different margin of safety will be safe for infants and children. Due to the expected low toxicity of AM–E–NMA–VA, EPA has not used a safety factor analysis to assess the risk. For the same reasons the additional tenfold safety factor is unnecessary.

VII. Determination of Safety

Based on the conformance to the criteria used to identify a low-risk polymer, EPA concludes that there is a reasonable certainty of no harm to the U.S. population, including infants and children, from aggregate exposure to residues of AM–E–NMA–VA.

VIII. Other Considerations

A. Analytical Enforcement Methodology

An analytical method is not required for enforcement purposes since the Agency is establishing an exemption from the requirement of a tolerance without any numerical limitation.

B. International Residue Limits

In making its tolerance decisions, EPA seeks to harmonize U.S. tolerances with international standards whenever possible, consistent with U.S. food safety standards and agricultural practices. EPA considers the international maximum residue limits (MRLs) established by the Codex Alimentarius Commission (Codex), as required by FFDCA section 408(b)(4). The Codex Alimentarius is a joint United Nations Food and Agriculture Organization/World Health Organization food standards program, and it is recognized as an international food safety standards-setting organization in trade agreements to which the United States is a party. EPA may establish a tolerance that is different from a Codex MRL; however, FFDCA section 408(b)(4) requires that EPA explain the reasons for departing from the Codex level.

The Codex has not established a MRL for AM–E–NMA–VA.

IX. Conclusion

Accordingly, EPA finds that exempting residues of AM–E–NMA–VA from the requirement of a tolerance will be safe.

X. Statutory and Executive Order Reviews

This action establishes a tolerance under FFDCA section 408(d) in response to a petition submitted to the Agency. The Office of Management and Budget (OMB) has exempted these types of actions from review under Executive Order 12866, entitled ''Regulatory Planning and Review'' (58 FR 51735, October 4, 1993). Because this action has been exempted from review under Executive Order 12866, this action is not subject to Executive Order 13211, entitled ''Actions Concerning Regulations That Significantly Affect Energy Supply, Distribution, or Use'' (66 FR 28355, May 22, 2001) or Executive Order 13045, entitled ''Protection of Children from Environmental Health Risks and Safety Risks'' (62 FR 19885, April 23, 1997). This action does not contain any information collections subject to OMB approval under the Paperwork Reduction Act (PRA) (44 U.S.C. 3501 *et seq.*), nor does it require any special considerations under Executive Order 12898, entitled ''Federal Actions to Address Environmental Justice in Minority Populations and Low-Income Populations'' (59 FR 7629, February 16, 1994).

Since tolerances and exemptions that are established on the basis of a petition under FFDCA section 408(d), such as the tolerance in this final rule, do not require the issuance of a proposed rule, the requirements of the Regulatory Flexibility Act (RFA) (5 U.S.C. 601 *et seq.*), do not apply.

This action directly regulates growers, food processors, food handlers, and food retailers, not States or Tribes, nor does this action alter the relationships or distribution of power and responsibilities established by Congress in the preemption provisions of FFDCA section 408(n)(4). As such, the Agency has determined that this action will not have a substantial direct effect on States or Tribal governments, on the relationship between the National Government and the States or Tribal governments, or on the distribution of power and responsibilities among the various levels of government or between the Federal Government and Indian Tribes. Thus, the Agency has determined that Executive Order 13132, entitled ''Federalism'' (64 FR 43255, August 10, 1999) and Executive Order 13175, entitled ''Consultation and Coordination with Indian Tribal Governments'' (65 FR 67249, November 9, 2000) do not apply to this action. In addition, this action does not impose any enforceable duty or contain any unfunded mandate as described under Title II of the Unfunded Mandates Reform Act (UMRA) (2 U.S.C. 1501 *et seq.*).

This action does not involve any technical standards that would require Agency consideration of voluntary consensus standards pursuant to section 12(d) of the National Technology Transfer and Advancement Act (NTTAA) (15 U.S.C. 272 note).

XI. Congressional Review Act

Pursuant to the Congressional Review Act (5 U.S.C. 801 *et seq.*), EPA will submit a report containing this rule and other required information to the U.S. Senate, the U.S. House of Representatives, and the Comptroller General of the United States prior to publication of the rule in the **Federal Register**. This action is not a ''major rule'' as defined by 5 U.S.C. 804(2).

List of Subjects in 40 CFR Part 180

Environmental protection, Administrative practice and procedure, Agricultural commodities, Pesticides and pests, Reporting and recordkeeping requirements.

Dated: December 1, 2021.

Marietta Echeverria,

Acting Director, Registration Division, Office of Pesticide Programs.

Therefore, for the reasons stated in the preamble, EPA is amending 40 CFR chapter I as follows:

PART 180—TOLERANCES AND EXEMPTIONS FOR PESTICIDE CHEMICAL RESIDUES IN FOOD

■ 1. The authority citation for part 180 continues to read as follows:

Authority: 21 U.S.C. 321(q), 346a and 371.

■ 2. In § 180.960, amend the table by adding in alphabetical order an entry for the polymer ''Acetic acid ethenyl ester, polymer with ethene, N-(hydroxymethyl)-2-propenamide, and 2-propenamide, (AM–E–NMA–VA) minimum number average molecular weight (in amu), 5500'' to read as follows:

§ 180.960 Polymers; exemptions from the requirement of a tolerance.

* * * * *

TABLE 1 TO § 180.960

Polymer	CAS No.
* * * * * * *	
Acetic acid ethenyl ester, polymer with ethene, N-(hydroxymethyl)-2-propenamide, and 2-propenamide, (AM–E–NMA–VA) minimum number average molecular weight (in amu), 5500.	CAS. Reg. No. 49603–78–3.
* * * * * * *	

[FR Doc. 2022–00312 Filed 1–10–22; 8:45 am]
BILLING CODE 6560–50–P

ENVIRONMENTAL PROTECTION AGENCY

40 CFR Part 180

[EPA–HQ–OPP–2020–0038; FRL–9086–01–OCSPP]

Trifloxystrobin; Pesticide Tolerance

AGENCY: Environmental Protection Agency (EPA).

ACTION: Final rule.

SUMMARY: This regulation establishes tolerances for residues of trifloxystrobin in or on multiple commodities which are identified and discussed later in this document. Bayer CropScience requested this tolerance under the Federal Food, Drug, and Cosmetic Act (FFDCA).

DATES: This regulation is effective January 11, 2022. Objections and requests for hearings must be received on or before March 14, 2022, and must be filed in accordance with the instructions provided in 40 CFR part 178 (see also Unit I.C. of the **SUPPLEMENTARY INFORMATION**).

ADDRESSES: The docket for this action, identified by docket identification (ID) number EPA–HQ–OPP–2020–0038, is available at *https://www.regulations.gov* or at the Office of Pesticide Programs Regulatory Public Docket (OPP Docket) in the Environmental Protection Agency Docket Center (EPA/DC), West William Jefferson Clinton Bldg., Rm. 3334, 1301 Constitution Ave. NW, Washington, DC 20460–0001. The Public Reading Room is open from 8:30 a.m. to 4:30 p.m., Monday through Friday, excluding legal holidays. The telephone number for the Public Reading Room is (202) 566–1744, and the telephone number for the OPP Docket is (703) 305–5805.

Due to the public health concerns related to COVID–19, the EPA Docket Center (EPA/DC) and Reading Room is closed to visitors with limited exceptions. The staff continues to provide remote customer service via email, phone, and webform. For the latest status information on EPA/DC services and docket access, visit *https://www.epa.gov/dockets.*

FOR FURTHER INFORMATION CONTACT: Marietta Echeverria, Acting Director, Registration Division (7505P), Office of Pesticide Programs, Environmental Protection Agency, 1200 Pennsylvania Ave. NW, Washington, DC 20460–0001; main telephone number: (703) 305–7090; email address: *RDFRNotices@epa.gov.*

SUPPLEMENTARY INFORMATION:

I. General Information

A. Does this action apply to me?

You may be potentially affected by this action if you are an agricultural producer, food manufacturer, or pesticide manufacturer. The following list of North American Industrial Classification System (NAICS) codes is not intended to be exhaustive, but rather provides a guide to help readers determine whether this document applies to them. Potentially affected entities may include:

- Crop production (NAICS code 111).
- Animal production (NAICS code 112).
- Food manufacturing (NAICS code 311).
- Pesticide manufacturing (NAICS code 32532).

B. How can I get electronic access to other related information?

You may access a frequently updated electronic version of EPA's tolerance regulations at 40 CFR part 180 through the Office of the Federal Register's e-CFR site at *https://www.ecfr.gov/current/title-40.*

C. How can I file an objection or hearing request?

Under FFDCA section 408(g), 21 U.S.C. 346a(g), any person may file an objection to any aspect of this regulation and may also request a hearing on those objections. You must file your objection or request a hearing on this regulation in accordance with the instructions provided in 40 CFR part 178. To ensure proper receipt by EPA, you must identify docket ID number EPA–HQ–OPP–2020–0038 in the subject line on the first page of your submission. All objections and requests for a hearing must be in writing and must be received by the Hearing Clerk on or before March 14, 2022. Addresses for mail and hand delivery of objections and hearing requests are provided in 40 CFR 178.25(b).

In addition to filing an objection or hearing request with the Hearing Clerk as described in 40 CFR part 178, please submit a copy of the filing (excluding any Confidential Business Information (CBI)) for inclusion in the public docket. Information not marked confidential pursuant to 40 CFR part 2 may be disclosed publicly by EPA without prior notice. Submit the non-CBI copy of your objection or hearing request, identified by docket ID number EPA–HQ–OPP–2020–0038, by one of the following methods:

- *Federal eRulemaking Portal: https://www.regulations.gov.* Follow the online instructions for submitting comments. Do not submit electronically any information you consider to be CBI or other information whose disclosure is restricted by statute.
- *Mail:* OPP Docket, Environmental Protection Agency Docket Center (EPA/DC), (28221T), 1200 Pennsylvania Ave. NW, Washington, DC 20460–0001.

• *Hand Delivery:* To make special arrangements for hand delivery or delivery of boxed information, please follow the instructions at *https://www.epa.gov/dockets/contacts.html.*

Additional instructions on commenting or visiting the docket, along with more information about dockets generally, is available at *https://www.epa.gov/dockets.*

II. Summary of Petitioned-For Tolerances

In the **Federal Register** of September 10, 2020 (85 FR 55810) (FRL–10013–78), EPA issued a document pursuant to FFDCA section 408(d)(3), 21 U.S.C. 346a(d)(3), announcing the filing of a pesticide petition (PP 9E8792) by Bayer CropScience, 800 N Lindbergh Blvd., St. Louis, MO 63141. The petition requested that 40 CFR 180.555 be amended by establishing tolerances for residues of the fungicide trifloxystrobin in or on the following raw agricultural commodities: Caneberry, Crop Subgroup 13–07A at 3.0 parts per million (ppm); Currant, black and red, at 4.0 ppm; Edible-Podded Legume Vegetables, Crop Subgroup 6A, at 1.5 ppm; Oil, olive, refined at 0.5 ppm; Pea, dry, seed at 0.2 ppm; Succulent shelled pea and bean, Crop Subgroup 6B at 0.15 ppm; and Tropical and Subtropical, Small fruit, edible peel, Crop Subgroup 23A at 0.2 ppm. That document referenced a summary of the petition prepared by Bayer CropScience, the petitioner, which is available in the docket for this action, docket ID number EPA–HQ–OPP–2020–0038, at *https://www.regulations.gov.* Two comments were received on the notice of filing. EPA's response to these comments is discussed in Unit IV.C.

Based upon review of the data supporting the petition, EPA is establishing tolerances for some commodities at different levels than requested by the petitioner and correcting some of the commodity definitions. Also, EPA is not establishing tolerances for two commodities. The reasons for these changes are explained in Unit IV.D.

III. Aggregate Risk Assessment and Determination of Safety

Section 408(b)(2)(A)(i) of the FFDCA allows EPA to establish a tolerance (the legal limit for a pesticide chemical residue in or on a food) only if EPA determines that the tolerance is ''safe.'' Section 408(b)(2)(A)(ii) of FFDCA defines ''safe'' to mean that ''there is a reasonable certainty that no harm will result from aggregate exposure to the pesticide chemical residue, including all anticipated dietary exposures and all other exposures for which there is reliable information.'' This includes exposure through drinking water and in residential settings but does not include occupational exposure. Section 408(b)(2)(C) of FFDCA requires EPA to give special consideration to exposure of infants and children to the pesticide chemical residue in establishing a tolerance and to ''ensure that there is a reasonable certainty that no harm will result to infants and children from aggregate exposure to the pesticide chemical residue. . . .''

Consistent with FFDCA section 408(b)(2)(D) and the factors specified therein, EPA has reviewed the available scientific data and other relevant information in support of this action. EPA has sufficient data to assess the hazards of and to make a determination on aggregate exposure for trifloxystrobin, including exposure resulting from the tolerances established by this action. EPA's assessment of exposures and risks associated with trifloxystrobin follows.

In an effort to streamline its publications in the **Federal Register**, EPA is not reprinting sections that repeat what has been previously published for tolerance rulemakings of the same pesticide chemical. Where scientific information concerning a particular chemical remains unchanged, the content of those sections would not vary between tolerance rulemakings, and EPA considers referral back to those sections as sufficient to provide an explanation of the information EPA considered in making its safety determination for the new rulemaking.

EPA has previously published a number of tolerance rulemakings for trifloxystrobin, in which EPA concluded, based on the available information, that there is a reasonable certainty that no harm would result from aggregate exposure to trifloxystrobin and established tolerances for residues of that chemical. EPA is incorporating previously published sections of those rulemakings that remain unchanged, as described further in this rulemaking. Specific information on the risk assessment conducted in support of this action, including on the studies received and the nature of the adverse effects caused by trifloxystrobin, can be found in the document titled ''Trifloxystrobin. Human Health Aggregate Risk Assessment for Use on Currant, Black and Red; Edible-Podded Legume Vegetables, Subgroup 6A; Succulent Shelled Pea and Bean, Subgroup 6B; Dried Shelled Pea; Caneberry, Subgroup 13–07A; Tropical and Subtropical, Small Fruit, Edible Peel, Subgroup 23A without U.S. Registration.'' dated September 29, 2021, which is available in the docket for this action at *https://www.regulations.gov.*

Toxicological profile. For a discussion of the Toxicological Profile of trifloxystrobin, see Unit III.A. of the trifloxystrobin tolerance rulemaking published in the **Federal Register** of February 15, 2019 (84 FR 4340) (FRL–9985–23) (Docket number EPA–HQ–OPP–2017–0530–0008).

Toxicological points of departure/Levels of concern. For a summary of the Toxicological Points of Departure/Levels of Concern used for the safety assessment, see Unit III.B. of the February 15, 2019 rulemaking.

Exposure assessment. Much of the exposure assessment remains the same since the February 15, 2019 rulemaking, although the new exposure assessment incorporates additional dietary exposures from the petitioned-for tolerances and reevaluates residential exposures based on approved label amendments. These updates are discussed in this section; for a description of the rest of EPA's approach to and assumptions for the exposure assessment, including with respect to residue data, percent crop treated (PCT), processing factors, estimated drinking water concentrations, and the Agency's conclusions about cumulative effects, see Unit III.C. of the February 15, 2019 rulemaking.

EPA's acute and chronic dietary (food and drinking water) exposure assessments have been updated to include the additional exposure from residues of trifloxystrobin on the commodities identified in this action. The acute dietary assessment used the same assumptions described in the February 15, 2019 rulemaking concerning tolerance-level residues, 100% CT and default processing factors. As described in the February 15, 2019 rulemaking, the assumptions for the chronic dietary assessment included average field trial residues for selected crops, tolerance-level residues for all other crop commodities, default and empirical processing factors, and PCT data when available. Tolerance-level residues were used for the commodities identified in this action.

In the new chronic dietary exposure assessment, EPA assumed average field trial residues for apples, rice and commodities in subgroups 4A, 4B, 5A, 5B and 19A. The following average PCT estimates were used in the chronic dietary risk assessment for the crops for which trifloxystrobin is currently registered: Apples: 25%, apricots: 10%, cantaloupes 5%, carrots 2.5%, cotton:

10%, cherries: 25%, pop, sweet, and field corn: <2.5%, cucumbers: <2.5%, dry beans/peas: <1%, grapefruit: 30%, grapes: 25%; hazelnuts: 65%, oranges: 5%, peaches: <2.5%, peanuts: 5%, pears: 10%, pecans: 15%, peppers: 5%, plums/prunes: <2.5%, potatoes: <1%, pumpkins: 5%, rice: 15%, soybeans: 5%, squash: <2.5%, strawberries: 5%, sugar beets: 5%, sweet corn: <2.5%, tangerines: 5%, tomatoes: <2.5%, watermelons: 5%, and wheat: <2.5%. One hundred percent (100%) CT was assumed for the remaining commodities. Due to uncertainty in PCT data from California, PCT for almonds, walnuts, pistachio, celery, artichokes, and nectarine were set to 100%.

Anticipated residue and percent crop treated information. Section 408(b)(2)(F) of FFDCA states that the Agency may use data on the actual percent of food treated for assessing chronic dietary risk only if:

- *Condition a:* The data used are reliable and provide a valid basis to show what percentage of the food derived from such crop is likely to contain the pesticide residue.
- *Condition b:* The exposure estimate does not underestimate exposure for any significant subpopulation group.
- *Condition c:* Data are available on pesticide use and food consumption in a particular area, and the exposure estimate does not understate exposure for the population in such area.

In addition, the Agency must provide for periodic evaluation of any estimates used. To provide for the periodic evaluation of the estimate of PCT as required by FFDCA section 408(b)(2)(F), EPA may require registrants to submit data on PCT.

In most cases, EPA uses available data from United States Department of Agriculture/National Agricultural Statistics Service (USDA/NASS), proprietary market surveys, and the National Pesticide Use Database for the chemical/crop combination for the most recent 6 to 7 years. EPA uses an average PCT for chronic dietary risk analysis. The average PCT figure for each existing use is derived by combining available public and private market survey data for that use, averaging across all observations, and rounding to the nearest 5%, except for those situations in which the average PCT is less than one. In those cases, 1% is used as the average PCT and 2.5% is used as the maximum PCT. EPA uses a 100 PCT for acute dietary risk analysis. The maximum PCT figure is the highest observed maximum value reported within the recent 6 years of available public and private market survey data for the existing use and rounded up to the nearest multiple of 5%.

The Agency believes that Conditions a, b, and c discussed above have been met. With respect to Condition a, PCT estimates are derived from Federal and private market survey data, which are reliable and have a valid basis. The Agency is reasonably certain that the percentage of the food treated is not likely to be an underestimation. As to Conditions b and c, regional consumption information and consumption information for significant subpopulations is taken into account through EPA's computer-based model for evaluating the exposure of significant subpopulations including several regional groups. Use of this consumption information in EPA's risk assessment process ensures that EPA's exposure estimate does not understate exposure for any significant subpopulation group and allows the Agency to be reasonably certain that no regional population is exposed to residue levels higher than those estimated by the Agency. Other than the data available through national food consumption surveys, EPA does not have available reliable information on the regional consumption of food to which trifloxystrobin may be applied in a particular area.

Estimated drinking water concentrations have not changed since the February 15, 2019 rulemaking, because there will be no U.S. registrations for use of trifloxystrobin on the commodities identified in this action. The non-dietary (*i.e.,* residential) exposure assessment reevaluated residential exposures and risk based on approved label amendments reflecting a lower representative single maximum application rate of 0.34 lb ai/A for products with residential turf use sites. There was no adverse systemic hazard via the dermal route of exposure. The updated residential post-application risk estimates for children 1 to less than 2 years old were not of concern.

Safety factor for infants and children. EPA continues to conclude that there is reliable data showing that the safety of infants and children is adequately protected if the Food Quality Protection Act (FQPA) safety factor is reduced from 10X to 1X for all routes of exposure other than inhalation. The FQPA safety factor of 10X has been retained for inhalation endpoints only to account for the lack of the subchronic inhalation toxicity study for trifloxystrobin at this time. The reasons for this determination are articulated in Unit III.D. of the February 15, 2019 rulemaking.

Assessment of aggregate risks. EPA determines whether acute and chronic dietary pesticide exposures are safe by comparing aggregate exposure estimates to the acute population adjusted dose (aPAD) and chronic population adjusted dose (cPAD). Short-, intermediate-, and chronic-term risks are evaluated by comparing the estimated aggregate food, water, and residential exposure to the appropriate points of departure (PODs) to ensure that an adequate margin of exposure (MOE) exists. For linear cancer risks, EPA calculates the lifetime probability of acquiring cancer given the estimated aggregate exposure.

Acute dietary (food and drinking water) risks are below the Agency's level of concern of 100% of the aPAD: They are 3.4% of the aPAD at the 95th percentile of exposure for females 13 to 49 years old, which is the population subgroup with the highest exposure estimate. No other subpopulations were evaluated. Chronic dietary (food and drinking water) risks are below the Agency's level of concern of 100% of the cPAD: They are 58% of the cPAD for infants less than 1 year old, which is the population subgroup with the highest exposure estimate. Moreover, the short-term aggregate risk for the population subgroup with the highest total exposure (children 1 to less than 2 years old) is represented by an aggregate MOE of 120, which is not a risk of concern because EPA considers MOEs of 100 or less to be of concern; short-term aggregate risk calculations are protective of the intermediate-term duration of exposure. Chronic aggregate risk is equivalent to chronic dietary (food and drinking water) risk estimates, which are not of concern. Trifloxystrobin is classified as ''not likely to be carcinogenic to humans'' based on the absence of significant tumor increases in two adequate rodent carcinogenicity studies; therefore, cancer exposure and risk assessments were not conducted at this time.

Determination of safety. Therefore, based on the risk assessments and information described above, EPA concludes there is a reasonable certainty that no harm will result to the general population, or to infants and children, from aggregate exposure to trifloxystrobin residues. More detailed information on the subject action to establish tolerances in or on Caneberry, subgroup 13–07A; Currant; Vegetable, legume, edible podded, subgroup 6A; Pea and bean, succulent shelled, subgroup 6B; and Tropical and subtropical, small fruit, edible peel, subgroup 23A can be found in the document entitled, ''Trifloxystrobin. Human Health Aggregate Risk Assessment for Use on Currant, Black and Red; Edible-Podded Legume

Vegetables, Subgroup 6A; Succulent Shelled Pea and Bean, Subgroup 6B; Dried Shelled Pea; Caneberry, Subgroup 13–07A; Tropical and Subtropical, Small Fruit, Edible Peel, Subgroup 23A without U.S. Registration.'' dated September 29, 2021 at *www.regulations.gov,* under docket ID number EPA–HQ–OPP–2020–0038.

IV. Other Considerations

A. Analytical Enforcement Methodology

For a discussion of the available analytical enforcement method, see Unit IV.A. of the February 15, 2019 rulemaking.

B. International Residue Limits

In making its tolerance decisions, EPA seeks to harmonize U.S. tolerances with international standards whenever possible, consistent with U.S. food safety standards and agricultural practices. EPA considers the international maximum residue limits (MRLs) established by the Codex Alimentarius Commission (Codex), as required by FFDCA section 408(b)(4). Codex is a joint United Nations Food and Agriculture Organization/World Health Organization food standards program, and it is recognized as an international food safety standards-setting organization in trade agreements to which the United States is a party. EPA may establish a tolerance that is different from a Codex MRL; however, FFDCA section 408(b)(4) requires that EPA explain the reasons for departing from the Codex level.

The tolerances for trifloxystrobin are not harmonized with Codex for every commodity identified in this action. No Codex MRLs have been established for residues of trifloxystrobin in or on Caneberry, subgroup 13–07A and Currant. The U.S. tolerance level for Vegetable, legume, edible-podded, subgroup 6A (1.5 ppm), calculated using the Organisation for Economic Co-operation and Development (OECD) MRL procedure, is much higher than the Codex MRL (0.01 ppm), and thus harmonization is not possible. Similarly, the U.S. tolerance level for Pea and bean, succulent shelled, subgroup 6B (0.2 ppm) is much higher than the Codex MRL (0.01 ppm for lima beans only), and thus harmonization is not possible. The U.S. tolerance level for Tropical and subtropical, small fruit, edible peel, subgroup 23A, is harmonized with the Codex MRL established in or on olives, a member of subgroup 23A, at 0.3 ppm.

C. Response to Comments

We received two comments regarding this import tolerance. A comment was received on September 10, 2020 regarding the absence of an analytical method and obtaining additional data. Analytical enforcement methodology is available for trifloxystrobin and is described in Unit IV.A. of the February 15, 2019 rulemaking (84 FR 4340) (FRL–9985–23). A risk assessment was conducted by EPA based on the well-characterized toxicology database for this active ingredient, and no risks of concern were identified. Tolerances are being set based on residue data and calculations using the OECD MRL calculation procedures.

An anonymous comment was received October 13, 2020, supporting the pesticide regulation. Upon consideration of the validity, completeness, and reliability of the available data as well as other factors the FFDCA requires EPA to consider, EPA has determined that the trifloxystrobin tolerances are safe.

D. Revisions to Petitioned-For Tolerances

The Agency is setting a tolerance for residues of trifloxystrobin in or on Caneberry, subgroup 13–07A at 2 ppm rather than the requested 3.0 ppm; in or on Currant at 3 ppm instead of the requested 4.0 ppm; and in or on Pea and bean, succulent shelled, subgroup 6B at 0.2 ppm rather than the requested 0.15 ppm based on values determined in accordance with the OECD MRL calculation procedures. A tolerance in or on Currant is being set rather than the petitioned-for ''Currant, black and red'' based on standard commodity definitions. Based on crop group revisions, the terminology Pea and bean, succulent shelled, subgroup 6B is used instead of the petitioned-for ''Succulent shelled pea and bean, subgroup 6B'' and Vegetable, legume, edible podded, subgroup 6A is used instead of the petitioned-for ''Edible-podded legume vegetables, subgroup 6A.'' The petitioned-for tolerance on ''Pea, dry seed'' is not being set because this commodity is covered by a tolerance that is already established for Pea and bean, dried shelled, except soybean, subgroup 6C. The tolerance in or on Tropical and subtropical, small fruit, edible peel, subgroup 23A tolerance is being set at 0.3 ppm rather than the petitioned-for 0.2 ppm to harmonize with the Codex MRL. The petitioned-for tolerance in or on Olive, oil is not being established because this commodity is covered by the tolerance established in this action for subgroup 23A.

V. Conclusion

Therefore, tolerances are established for residues of trifloxystrobin including its metabolites and degradates in or on Caneberry, subgroup 13–07A at 2 parts per million (ppm); Currant at 3 ppm; Pea and bean, succulent shelled, subgroup 6B at 0.2 ppm; Tropical and subtropical, small fruit, edible peel, subgroup 23A at 0.3 ppm; and Vegetable, legume, edible podded, subgroup 6A at 1.5 ppm.

VI. Statutory and Executive Order Reviews

This action establishes tolerances under FFDCA section 408(d) in response to a petition submitted to the Agency. The Office of Management and Budget (OMB) has exempted these types of actions from review under Executive Order 12866, entitled ''Regulatory Planning and Review'' (58 FR 51735, October 4, 1993). Because this action has been exempted from review under Executive Order 12866, this action is not subject to Executive Order 13211, entitled ''Actions Concerning Regulations That Significantly Affect Energy Supply, Distribution, or Use'' (66 FR 28355, May 22, 2001). This action does not contain any information collections subject to OMB approval under the Paperwork Reduction Act (PRA) (44 U.S.C. 3501 *et seq.*), nor does it require any special considerations under Executive Order 12898, entitled ''Federal Actions to Address Environmental Justice in Minority Populations and Low-Income Populations'' (59 FR 7629, February 16, 1994).

Since tolerances and exemptions that are established on the basis of a petition under FFDCA section 408(d), such as the tolerances for residues in this final rule, do not require the issuance of a proposed rule, the requirements of the Regulatory Flexibility Act (RFA) (5 U.S.C. 601 *et seq.*), do not apply.

This action directly regulates growers, food processors, food handlers, and food retailers, not States or tribes, nor does this action alter the relationships or distribution of power and responsibilities established by Congress in the preemption provisions of FFDCA section 408(n)(4). As such, the Agency has determined that this action will not have a substantial direct effect on States or Tribal governments, on the relationship between the National Government and the States or Tribal governments, or on the distribution of power and responsibilities among the various levels of government or between the Federal Government and Indian Tribes. Thus, the Agency has

determined that Executive Order 13132, entitled ''Federalism'' (64 FR 43255, August 10, 1999) and Executive Order 13175, entitled ''Consultation and Coordination with Indian Tribal Governments'' (65 FR 67249, November 9, 2000) do not apply to this action. In addition, this action does not impose any enforceable duty or contain any unfunded mandate as described under Title II of the Unfunded Mandates Reform Act (UMRA) (2 U.S.C. 1501 *et seq.*).

This action does not involve any technical standards that would require Agency consideration of voluntary consensus standards pursuant to section 12(d) of the National Technology Transfer and Advancement Act (NTTAA) (15 U.S.C. 272 note).

VII. Congressional Review Act

Pursuant to the Congressional Review Act (5 U.S.C. 801 *et seq.*), EPA will submit a report containing this rule and other required information to the U.S. Senate, the U.S. House of Representatives, and the Comptroller General of the United States prior to publication of the rule in the **Federal Register**. This action is not a ''major rule'' as defined by 5 U.S.C. 804(2).

List of Subjects in 40 CFR Part 180

Environmental protection, Administrative practice and procedure, Agricultural commodities, Pesticides and pests, Reporting and recordkeeping requirements.

Dated: January 5, 2022.

Marietta Echeverria,

Acting Director, Registration Division, Office of Pesticide Programs.

Therefore, for the reasons stated in the preamble, EPA is amending 40 CFR chapter I as follows:

PART 180—TOLERANCES AND EXEMPTIONS FOR PESTICIDE CHEMICAL RESIDUES IN FOOD

■ 1. The authority citation for part 180 continues to read as follows:

Authority: 21 U.S.C. 321(q), 346a and 371.

■ 2. In § 180.555, amend the table in paragraph (a) by:

■ a. Adding in alphabetical order the entries for ''Caneberry, subgroup 13–07A''; ''Currant''; ''Pea and bean, succulent shelled, subgroup 6B''; ''Tropical and subtropical, small fruit, edible peel, subgroup 23A''; and ''Vegetable, legume, edible podded, subgroup 6A''.

■ b. Add footnote 4.

The additions read as follows:

§ 180.555 Trifloxystrobin; tolerances for residues.

(a) * * *

Commodity	Parts per million
* * * * * * *	
Caneberry, subgroup 13–07A [4]	2
* * * * * * *	
Currant [4]	3
* * * * * * *	
Pea and bean, succulent shelled, subgroup 6B [4]	0.2
* * * * * * *	
Tropical and subtropical, small fruit, edible peel, subgroup 23A [4]	0.3
* * * * * * *	
Vegetable, legume, edible podded, subgroup 6A [4]	1.5
* * * * * * *	
[3] * * * * * * *	

[4] There are no U.S. registrations on this commodity as of January 11, 2022.

* * * * *

[FR Doc. 2022–00311 Filed 1–10–22; 8:45 am]

BILLING CODE 6560–50–P

DEPARTMENT OF HEALTH AND HUMAN SERVICES

Office of Inspector General

42 CFR Part 1008

Medicare and State Health Care Programs: Fraud and Abuse; Procedures Regarding the Submission of Advisory Opinion Requests to, and the Issuance of Advisory Opinions by, OIG

AGENCY: Office of Inspector General (OIG), Department of Health and Human Services (HHS).

ACTION: Final rule.

SUMMARY: OIG is amending the regulations governing the procedures for the submission of advisory opinion requests to, and the issuance of advisory opinions by, OIG.

DATES: This final rule is effective February 10, 2022.

FOR FURTHER INFORMATION CONTACT: Christina Hinkle, Office of Counsel to the Inspector General, (202) 465–6245.

SUPPLEMENTARY INFORMATION:

I. Background

Pursuant to section 1128D of the Social Security Act (the Act),[1] HHS, through OIG, publishes advisory opinions regarding the application of the Federal anti-kickback statute [2] and the safe harbor provisions, as well as OIG's administrative sanction authorities, to parties' proposed or existing arrangements. More specifically, in consultation with the Department of Justice (DOJ) OIG issues written advisory opinions to requesting parties with regard to: (1) What constitutes prohibited remuneration under the Federal anti-kickback statute; (2) whether an arrangement or proposed arrangement satisfies the criteria in section 1128B(b)(3) of the Act, or established by regulation (*i.e.,* safe harbors),[3] for activities that do not result in prohibited remuneration; (3) what constitutes an inducement to reduce or

[1] 42 U.S.C. 1320a–7d.

[2] Section 1128B of the Act; 42 U.S.C. 1320a–7b(b).

[3] The safe harbor regulations are set forth at 42 CFR 1001.952.

limit services to Medicare or Medicaid program beneficiaries under section 1128A(b) of the Act;[4] and (4) whether an activity or proposed activity constitutes grounds for the imposition of sanctions under section 1128,[5] 1128A, or 1128B of the Act.

Section 1128D(b) required the issuance of regulations to carry out the advisory opinion process and specified that the regulations must provide for ''the procedure to be followed by the [OIG] in responding to a request for an advisory opinion.'' In response to this requirement, OIG issued an interim final rule with comment period in 1997.[6] In this interim final rule, OIG established a new 42 CFR part 1008, which contains the specific procedures for the submission of requests by individuals or entities for advisory opinions to and the issuance of advisory opinions by OIG, in consultation with DOJ. We revised and clarified our regulations in a final rule issued in 1998.[7] In 2008, we revised certain procedural requirements in 42 CFR part 1008 for submitting payments for advisory opinion costs.[8]

In the 1997 interim final rule, OIG established a procedural regulation—42 CFR 1008.15(c)—that describes the circumstances in which OIG will not accept a request or will not issue an opinion. Specifically, § 1008.15(c) provides that an advisory opinion request will not be accepted and/or an advisory opinion will not be issued when: (1) The request is not related to a named individual or entity; (2) the same or substantially the same course of action is under investigation, or is or has been the subject of a proceeding involving HHS or another governmental agency; or (3) an informed opinion cannot be made, or could be made only after extensive investigation, clinical study, testing, or collateral inquiry. Section 1008.15(c) has not been modified since it was promulgated in 1997.

II. Final Rule

This final rule removes the procedural provision at 42 CFR 1008.15(c)(2), which precludes the acceptance of an advisory opinion request and/or issuance of an advisory opinion when the same or substantially the same course of action is under investigation or has been the subject of a proceeding involving HHS or another governmental agency. In addition, this final rule corrects a grammatical error in § 1008.15(c).

Section 1008.15(c) is a procedural rule that was promulgated consistent with our statutory obligation under section 1128D(b) of the Act. The purpose of § 1008.15(c)(2) is to prevent the advisory opinion process from interfering with the investigatory or prosecutorial authority of OIG, DOJ, or any other governmental agency. Under the current regulation, no advisory opinion is issued if the same or substantially the same course of action is under investigation or is the subject of a proceeding involving HHS or another governmental agency.

We are removing § 1008.15(c)(2) for two reasons. First, removal of this provision will offer OIG more flexibility in responding to requests for advisory opinions. In particular, this final rule will afford OIG the flexibility to issue a favorable or unfavorable advisory opinion when an arrangement presented in an advisory opinion request involves conduct that is the same or substantially the same as conduct that is under investigation or subject to a proceeding. When OIG has rejected advisory opinion requests pursuant to the existing regulation, some requestors have expressed frustration with this regulatory provision because it prevents OIG from providing its legal opinion regarding the application of certain Federal fraud and abuse authorities. Second, removal of § 1008.15(c)(2) may provide industry stakeholders with greater transparency regarding factors the Government may consider in evaluating compliance with certain Federal fraud and abuse laws and distinguishing between similar arrangements.

In conjunction with issuing this rule, OIG is publishing on its website an enforcement policy statement announcing that, as of the effective date of this rule, if the arrangement for which an advisory opinion is sought is the same or similar to conduct that is currently under investigation or is the subject of a proceeding involving a governmental agency, that fact will weigh against the issuance of a favorable advisory opinion because such circumstances generally indicate that the arrangement does not present a sufficiently low risk of fraud and abuse. That said, consistent with current practices, OIG will carefully consider the facts and circumstances of each advisory opinion request in our legal assessment.

This rulemaking is separate and distinct from the Request for Information (RFI) entitled ''OIG Modernization Initiative To Improve Its Publicly Available Resources,'' published in the **Federal Register** on September 24, 2021.[9] OIG has not yet reviewed and considered comments made in response to the RFI, and this rulemaking is not connected to any feedback received in response to the RFI.

III. Regulatory Impact Statement

As set forth below, we have examined the impact of this final rule as required by Executive Order 12866, the Regulatory Flexibility Act (RFA) of 1980, the Unfunded Mandates Reform Act of 1995, Executive Order 13132, and Executive Order 13771.

A. Administrative Procedure Act

The advisory opinion process is an established OIG program. This final rule is limited to modifying the internal governmental procedure for handling advisory opinion requests involving conduct that is the same or similar to an ongoing investigation or proceeding. The modification likely will result in a similar outcome for most advisory opinion requests involving conduct that is the same or similar to an ongoing investigation in that those requests likely would not result in favorable advisory opinions. This rule does not modify eligibility of a party to request an advisory opinion or the process for requesting an advisory opinion.

OIG expects that this final rule will further the public's interest with minimal burden by fulfilling the statutory obligations to consult with DOJ as part of the advisory opinion process, providing greater flexibility for OIG in its procedures to be followed in responding to a request for an advisory opinion, and potentially promoting greater transparency regarding factors the Government may consider in evaluating compliance with certain Federal fraud and abuse laws and distinguishing between similar arrangements. Because this rule is procedural, notice and comment rulemaking is not required under 5 U.S.C. 553(b)(A).

B. Executive Order 12866 and Regulatory Flexibility Act

Because no notice of proposed rulemaking is required for this rule, the provisions of the RFA do not apply. Furthermore, this document does not meet the criteria for a significant regulatory action as specified in Executive Order 12866.

[4] 42 U.S.C. 1320a–7a(b).

[5] 42 U.S.C. 1320a–7.

[6] 62 FR 7350 (Feb. 19, 1997).

[7] 63 FR 38311 (July 16, 1998).

[8] 73 FR 15937 (Mar. 26, 2008); 73 FR 40982 (July 17, 2008).

[9] OIG, OIG Modernization Initiative To Improve Its Publicly Available Resources—Request for Information, 86 FR 53072 (Sept. 24, 2021).

C. Unfunded Mandates Reform Act

Section 202 of the Unfunded Mandates Reform Act of 1995, Public Law 104–4, requires that agencies assess anticipated costs and benefits before issuing any rule that may result in expenditures in any one year by State, local, or tribal governments in the aggregate, or by the private sector, of $100 million or more (adjusted annually for inflation). We believe that this final rule will not impose any mandates on State, local, or tribal governments or the private sector that would result in an expenditure of $100 million or more (adjusted for inflation) in any given year, and that a full analysis under the Unfunded Mandates Reform Act is not necessary.

D. Executive Order 13132

Executive Order 13132 establishes certain requirements that an agency must meet when it promulgates a rule that imposes substantial direct requirements or costs on State and local governments, preempts State law, or otherwise has federalism implications. In reviewing this final rule under the threshold criteria of Executive Order 13132, Federalism, we have determined that this final rule would not significantly limit the rights, roles, and responsibilities of State or local governments. We have determined, therefore, that a full analysis under Executive Order 13132 is not necessary.

E. Executive Order 13771

Executive Order 13771 requires that the costs associated with significant new regulations ''to the extent permitted by law, be offset by the elimination of existing costs associated with at least two prior regulations.'' This final rule imposes no more than *de minimis* costs and is neither a regulatory nor a deregulatory action under Executive Order 13771.

IV. Paperwork Reduction Act

In accordance with section 3506(c)(2)(A) of the Paperwork Reduction Act of 1995, we are required to solicit public comments, and receive final Office of Management and Budget (OMB) approval, on any information collection requirements set forth in rulemaking. This final rule will not impose any information collection burden or affect information currently collected by OIG.

List of Subjects in 42 CFR Part 1008

Administrative practice and procedure, Medicaid, Medicare, Reporting and recordkeeping requirements.

For the reasons set out in the preamble, 42 CFR part 1008 is amended as follows:

PART 1008—ADVISORY OPINIONS BY THE OIG

■ 1. The authority citation for part 1008 continues to read as follows:

Authority: 42 U.S.C. 1320a–7d(b).

■ 2. Section 1008.15 is amended by revising paragraph (c) to read as follows:

§ 1008.15 Facts subject to advisory opinions.

* * * * *

(c) An advisory opinion request will not be accepted, and/or an opinion will not be issued when—

(1) The request is not related to a named individual or entity; or

(2) An informed opinion cannot be made, or could be made only after extensive investigation, clinical study, testing, or collateral inquiry.

* * * * *

Dated: January 3, 2022.

Christi A. Grimm,

Principal Deputy Performing Duties of the Inspector General.

Xavier Becerra,

Secretary.

[FR Doc. 2022–00313 Filed 1–7–22; 8:45 am]

BILLING CODE 4152–01–P

Proposed Rules

Federal Register
Vol. 87, No. 7
Tuesday, January 11, 2022

This section of the FEDERAL REGISTER contains notices to the public of the proposed issuance of rules and regulations. The purpose of these notices is to give interested persons an opportunity to participate in the rule making prior to the adoption of the final rules.

DEPARTMENT OF THE INTERIOR

Office of Surface Mining Reclamation and Enforcement

30 CFR Part 917

[SATS No. KY–255–FOR; Docket ID: OSM–2012–0004; S1D1S SS08011000 SX064A000 222S180110; S2D2S SS08011000 SX064A000 22XS501520]

Kentucky Regulatory Program

AGENCY: Office of Surface Mining Reclamation and Enforcement, Interior.

ACTION: Proposed rule; reopening of the public comment period and opportunity for public hearing on the proposed amendment.

SUMMARY: We are reopening the comment period and providing an opportunity for a public hearing on the proposed amendment to the Kentucky regulatory program (the ''Kentucky program'') under the Surface Mining Control and Reclamation Act of 1977 (SMCRA or the Act). The comment period is being reopened to incorporate additional statutory and regulatory provisions that were not included in the original Kentucky submittal. The revised amendment includes legislative and regulatory actions regarding electronic service of enforcement documents, clarification of Kentucky's administrative hearings regulations, and miscellaneous minor, non-substantive changes. The amendment also includes reorganization and renumbering of the Kentucky Administrative Regulations. This document gives the times and locations that the Kentucky submittal is available for your inspection, the comment period during which you may submit written comments, and the procedures that we will follow for the public hearing, if one is requested.

DATES: We will accept written comments on this amendment until 4:00 p.m., Eastern Standard Time (e.s.t.), February 10, 2022. If requested, we may hold a public hearing or meeting on the amendment on February 7, 2022. We will accept requests to speak at a hearing until 4:00 p.m., e.s.t. on January 26, 2022.

ADDRESSES: You may submit comments, identified by SATS No. KY–255–FOR, by any of the following methods:

- *Mail/Hand Delivery:* Mr. Michael Castle, Field Office Director, Lexington Field Office, Office of Surface Mining Reclamation and Enforcement, 2675 Regency Road, Lexington, KY 40503.
- *Fax:* (859) 260–8410.
- *Federal eRulemaking Portal:* The amendment has been assigned Docket ID: OSM–2012–0004. If you would like to submit comments, go to *https://www.regulations.gov.* Follow the instructions for submitting comments.

Instructions: All submissions received must include the agency name and docket number for this rulemaking. For detailed instructions on submitting comments and additional information on the rulemaking process, see the ''Public Comment Procedures'' heading of the **SUPPLEMENTARY INFORMATION** section of this document.

Docket: For access to the docket to review copies of the Kentucky program, this amendment, a listing of any scheduled public hearings or meetings, and all written comments received in response to this document, you must go to the address listed below during normal business hours, Monday through Friday, excluding holidays. You may receive one free copy of the amendment by contacting OSMRE's Lexington Field Office or the full text of the program amendment is available for you to read at *https://www.regulations.gov.*

Mr. Michael Castle, Field Office Director, Lexington Field Office, Office of Surface Mining Reclamation and Enforcement, 2675 Regency Road, Lexington, KY 40503, Telephone: (859) 260–3900, Email: *mcastle@osmre.gov.*

In addition, you may review a copy of the amendment during regular business hours at the following location: Mr. Michael Mullins, Regulation Coordinator, Department for Natural Resources, Kentucky Energy and Environment Cabinet, 3000 Sower Boulevard, Frankfort, KY 40601, Telephone: (502) 782–6720, Email: *michael.mullins@ky.gov.*

FOR FURTHER INFORMATION CONTACT: Mr. Michael Castle, Field Office Director, Lexington Field Office, Office of Surface Mining Reclamation and Enforcement, 2675 Regency Road, Lexington, KY 40503, Telephone: (859) 260–3900, Email: *mcastle@osmre.gov.*

SUPPLEMENTARY INFORMATION:

I. Background on the Kentucky Program
II. Description of the Proposed Amendment
III. Public Comment Procedures
IV. Statutory and Executive Order Reviews

I. Background on the Kentucky Program

Section 503(a) of the Act permits a State to assume primacy for the regulation of surface coal mining and reclamation operations on non-Federal and non-Indian lands within its borders by demonstrating that its approved State program includes, among other things, State laws and regulations that govern surface coal mining and reclamation operations in accordance with the Act and consistent with the Federal regulations. See 30 U.S.C. 1253(a)(1) and (7). On the basis of these criteria, the Secretary of the Interior conditionally approved the Kentucky program effective May 18, 1982. You can find background information on the Kentucky program, including the Secretary's findings, the disposition of comments, and conditions of approval of the Kentucky program in the May 18, 1982, **Federal Register** (47 FR 21434). You can also find later actions concerning the Kentucky program and program amendments at 30 CFR 917.11, 917.12, 917.13, 917.15, 917.16, and 917.17.

II. Description of the Proposed Amendment

Initial Submission

On January 30, 2012, Kentucky submitted a proposed program amendment (Administrative Record No. KY–1900–01) containing administrative regulations regarding electronic notification of enforcement documents and other miscellaneous changes. We published a Proposed Rule Notice in the June 12, 2012 **Federal Register** (77 FR 34888).

On October 23, 2012, we sent Kentucky an issue letter seeking clarification on language from 405 KAR 7:091. Kentucky sent us a response on November 15, 2012, informing us that it would make changes to its regulations in response to our issue letter and subsequent discussions, and then submit a revised amendment.

After determining that there were regulatory changes that Kentucky did

not include in the original Kentucky submittal, we determined that we needed to reopen the public comment period so that the public could view and have the opportunity to comment on the full amendment.

We sent Kentucky a second issue letter on August 11, 2020, asking Kentucky to describe the complete legislative and regulatory changes in the amendment and to describe the recodification of many of the provisions that occurred since the original Kentucky submittal. On October 30, 2020, Kentucky sent us a response that provided the requested information.

Below is a summary of Kentucky's proposed changes. We have listed the changes according to their final regulatory section numbering. If the original regulatory section numbering differs we have listed it in parenthesis. The full text of the amendment is available for you to read at the locations listed above under **ADDRESSES** or at *www.regulations.gov.*

A. Reorganization of Administrative Hearing Regulations

Kentucky proposes to merge its regulations on administrative hearings for surface mining with its general administrative hearing regulations. Kentucky would merge the regulations by removing the regulations at 405 KAR 7:091 and recodifying them at 400 KAR 1:090 and 110. Kentucky would also remove the regulations at 405 KAR 7:092 and recodify them at 400 KAR 1:110.

The merger would include many non-substantive changes to the numbering, format, and language of the regulations. We will not describe the non-substantive changes in this notice. The full text of the proposed amendment is available at the locations listed above under **ADDRESSES** or at *www.regulations.gov.*

B. Electronic Service of Notice of Noncompliance

1. KRS 350.130

Kentucky proposes to revise this subchapter to provide for electronic delivery of notice of noncompliance and to require an electronic registered receipt for Kentucky to consider the delivery effective.

2. 405 KAR 12:020

Kentucky proposes to revise this subchapter to provide for electronic delivery of notice of noncompliance, order for remedial measures, order for cessation and immediate compliance, and notice of inspection of noncompliance.

3. 405 KAR 1:090 (originally 405 KAR 7:091)

Kentucky proposes to merge 405 KAR 7:091 Section 7 with 405 KAR 1:110 and add provisions to allow the filing of a pleading by electronic mail.

4. 405 KAR 1:110 (originally 405 KAR 7:091)

Kentucky proposes to merge 405 KAR 7:091 Section 5 with 405 KAR 1:110 Section 3, and add provisions that would allow the electronic service of proposed penalty assessments, notices of assessment conference, notices of administrative hearings, administrative summonses, and other documents.

C. Miscellaneous Changes

1. 400 KAR 1:090 (originally 405 KAR 7:091)

In merging 405 KAR 7:091 Section 1 to 400 KAR 1:090 Section 1, Kentucky proposes to remove provisions on public participation during the review of determinations concerning surface mining permits, notices of noncompliance, orders for cessation, performance bond amount, orders to abate, and other matters appropriate for adjudication by the Kentucky Energy and Environment Cabinet (the Cabinet).

Kentucky proposes to rescind a proposed change from its original amendment submission. In our proposed rule notice published on June 12, 2012 (Admin. Record No. KY–1900–3), we wrote that Kentucky proposed to add the phrase ''that is not the result of a lack of diligence on the part of the corporate party or its counsel'' at 405 KAR 7:091 Section 2(1)(a). Kentucky has withdrawn that change, and the original language will carry over to the sub-paragraph's new location at 400 KAR 1:090 Section 10. Kentucky also proposes non-substantive changes for clarity. The new sub-paragraph will read ''The failure of the corporation or limited liability company to appear by counsel, without good cause, shall be grounds for default.''

Kentucky proposes to merge 405 KAR 7:091 Section 6 to 400 KAR 1:090 Section 5 and to remove the requirement for notices of administrative hearings to be mailed to intervenors, posted at a regional office, and published in a local newspaper.

2. 400 KAR 1:110 (originally 405 KAR 7:092)

Kentucky proposes to move 405 KAR 7:092 Section 4 to 400 KAR 1:110 Section 4 and to remove the 30-day time limit for a recipient of a notice of penalty assessment to request an assessment conference.

Kentucky proposes to move 405 KAR 7:092 Section 6 to 400 KAR 1:110 Section 6 and to remove the requirement for petitions of penalty assessments to include full payment of the proposed penalty assessment.

3. 400 KAR 1:110

Kentucky proposes to add two new sections to 400 KAR 1:110. Section 13 would govern the location of administrative hearings and Section 14 would govern judicial review and remand of final orders from the Secretary of the Cabinet.

4. 405 KAR 12:020

Kentucky proposes to change 405 KAR 12:020 Section 2(5) by adding language to specify examples of good cause for modifying remedial measures, including correction of errors, changes in responsible parties, changes to remedial measures, and changes in abatement dates.

III. Public Comment Procedures

Under the provisions of 30 CFR 732.17(h), we are seeking your comments on whether the amendment satisfies the applicable program approval criteria of 30 CFR 732.15. If we approve the amendment, it will become part of the State program.

Electronic or Written Comments

If you submit written or electronic comments on the proposed rule during the 30-day comment period, they should be specific, confined to issues pertinent to the proposed regulations, and explain the reason for any recommended change(s). We appreciate any and all comments, but those most useful and likely to influence decisions on the final regulations will be those that either involve personal experience or include citations to and analyses of SMCRA, its legislative history, its implementing regulations, case law, other pertinent State or Federal laws or regulations, technical literature, or other relevant publications.

We cannot ensure that comments received after the close of the comment period (see **DATES**) or sent to an address other than those listed (see **ADDRESSES**) will be included in the docket for this rulemaking and considered.

Public Availability of Comments

Before including your address, phone number, email address, or other personal identifying information in your comment, you should be aware that your entire comment including your personal identifying information, may be made publicly available at any time. While you can ask us in your comment

to withhold your personal identifying information from public review, we cannot guarantee that we will be able to do so.

Public Hearing

If you wish to speak at the public hearing, contact the person listed under **FOR FURTHER INFORMATION CONTACT** by 4:00 p.m., e.s.t. on January 26, 2022. If you are disabled and need reasonable accommodations to attend a public hearing, contact the person listed under **FOR FURTHER INFORMATION CONTACT**. We will arrange the location and time of the hearing with those persons requesting the hearing. If no one requests an opportunity to speak, we will not hold a hearing.

To assist the transcriber and ensure an accurate record, we request, if possible, that each person who speaks at the public hearing provide us with a written copy of his or her comments. The public hearing will continue on the specified date until everyone scheduled to speak has been given an opportunity to be heard. If you are in the audience and have not been scheduled to speak and wish to do so, you will be allowed to speak after those who have been scheduled. We will end the hearing after everyone scheduled to speak and others present in the audience who wish to speak, have been heard.

Public Meeting

If only one person requests an opportunity to speak, we may hold a public meeting rather than a public hearing. If you wish to meet with us to discuss the amendment, please request a meeting by contacting the person listed under **FOR FURTHER INFORMATION CONTACT**. All such meetings are open to the public and, if possible, we will post notices of meetings at the locations listed under **ADDRESSES**. We will make a written summary of each meeting a part of the administrative record.

IV. Statutory Orders and Executive Reviews

Executive Order 12866—Regulatory Planning and Review and Executive Order 13563—Improving Regulation and Regulatory Review

Executive Order 12866 provides that the Office of Information and Regulatory Affairs in the Office of Management and Budget (OMB) will review all significant rules. Pursuant to OMB guidance, dated October 12, 1993, the approval of State program amendments is exempted from OMB review under Executive Order 12866. Executive Order 13563, which reaffirms and supplements Executive Order 12866, retains this exemption.

Other Laws and Executive Orders Affecting Rulemaking

When a State submits a program amendment to OSMRE for review, our regulations at 30 CFR 732.17(h) require us to publish a notice in the **Federal Register** indicating receipt of the proposed amendment, its text or a summary of its terms, and an opportunity for public comment. We conclude our review of the proposed amendment after the close of the public comment period and determine whether the amendment should be approved, approved in part, or not approved. At that time, we will also make the determinations and certifications required by the various laws and executive orders governing the rulemaking process and include them in the final rule.

List of Subjects in 30 CFR Part 917

Intergovernmental relations, Surface mining, Underground mining.

Thomas D. Shope,

Regional Director, North Atlantic—Appalachian Region.

[FR Doc. 2022–00323 Filed 1–10–22; 8:45 am]

BILLING CODE 4310–05–P

DEPARTMENT OF THE INTERIOR

Office of Surface Mining Reclamation and Enforcement

30 CFR Part 926

[SATS No. MT–037–FOR; Docket ID: OSM–2021–0006; S1D1S SS08011000 SX064A000 222S180110; S2D2S SS08011000 SX064A000 22XS501520]

Montana Regulatory Program

AGENCY: Office of Surface Mining Reclamation and Enforcement, Interior.

ACTION: Proposed rule; public comment period and opportunity for public hearing on proposed amendment.

SUMMARY: We, the Office of Surface Mining Reclamation and Enforcement (OSMRE), are announcing receipt of a proposed amendment to the Montana regulatory program (hereinafter, the Montana program) under the Surface Mining Control and Reclamation Act of 1977 (SMCRA or the Act). Montana proposes an addition to the Montana Code Annotated which requires changes and the addition of regulations in the Administrative Rules of Montana pertaining to ownership and control. These changes were required by an October 2, 2009, letter from OSMRE to Montana (hereinafter, 732 letter), and were necessitated by a Senate bill approved by the 2013 Montana Legislature. Montana also proposes other revisions to the Administrative Rules of Montana unrelated to ownership and control. This document gives the times and locations that the Montana program and this proposed amendment to that program are available for your inspection, the comment period during which you may submit written comments on the amendment, and the procedures that we will follow for the public hearing, if one is requested.

DATES: We will accept written comments on this amendment until 4:00 p.m., Mountain Standard Time (MST), February 10, 2022. If requested, we may hold a public hearing or meeting on the amendment on February 7, 2022. We will accept requests to speak at a hearing until 4:00 p.m., MST on January 26, 2022.

ADDRESSES: You may submit comments, identified by SATS No. MT–037–FOR, by any of the following methods:

- *Mail/Hand Delivery:* 100 East B Street, Room 4100, Casper, WY 82601.
- *Fax:* (307) 421–6552.
- *Federal eRulemaking Portal:* The amendment has been assigned Docket ID: OSM–2021–0006. If you would like to submit comments go to *https://www.regulations.gov.* Follow the instructions for submitting comments.

Instructions: All submissions received must include the agency name and docket number for this rulemaking. For detailed instructions on submitting comments and additional information on the rulemaking process, see the ''Public Comment Procedures'' heading of the **SUPPLEMENTARY INFORMATION** section of this document.

Docket: For access to the docket to review copies of the Montana program, this amendment, a listing of any scheduled public hearings or meetings, and all written comments received in response to this document, you must go to the address listed below during normal business hours, Monday through Friday, excluding holidays. You may receive one free copy of the amendment by contacting OSMRE's Denver Field Division or the full text of the program amendment is available for you to read at *www.regulations.gov.*

Jeffrey Fleischman, Chief, Denver Field Division, Office of Surface Mining Reclamation and Enforcement, Dick Cheney Federal Building, POB 11018, 100 East B Street, Casper, Wyoming 82601, Telephone: (307) 261–6550, Email: *jfleischman@osmre.gov.*

In addition, you may review a copy of the amendment during regular business hours at the following location:

Dan Walsh, Chief, Coal and Opencut Mining Bureau, Montana Department of Environmental Quality, P.O. Box 200901, Helena, Montana, 59620–0901, Telephone: (406) 444–6791, Email: *dwalsh@mt.gov.*

FOR FURTHER INFORMATION CONTACT: Howard Strand, Office of Surface Mining Reclamation and Enforcement, One Denver Federal Center, Building 41, Lakewood, CO 80225–0065, Telephone: (303) 236–2931, Email: *hstrand@osmre.gov.*

SUPPLEMENTARY INFORMATION:

I. Background on the Montana Program
II. Description of the Proposed Amendment
III. Public Comment Procedures
IV. Statutory and Executive Order Reviews

I. Background on the Montana Program

Section 503(a) of the Act permits a State to assume primacy for the regulation of surface coal mining and reclamation operations on non-Federal and non-Indian lands within its borders by demonstrating that its approved, State program includes, among other things, State laws and regulations that govern surface coal mining and reclamation operations in accordance with the Act and consistent with the Federal regulations. See 30 U.S.C. 1253(a)(1) and (7). On the basis of these criteria, the Secretary of the Interior conditionally approved the Montana program on April 1, 1980. You can find background information on the Montana program, including the Secretary's findings, the disposition of comments, and conditions of approval of the Montana program in the April 1, 1980, **Federal Register** (45 FR 21560). You can also find later actions concerning the Montana program and program amendments at 30 CFR 926.15, 926.16, and 926.30.

II. Description of the Proposed Amendment

On October 28, 1994, December 19, 2000, and December 3, 2007, the Office of Surface Mining Reclamation and Enforcement (OSMRE) promulgated final rules that adopted or revised certain regulatory definitions and provisions pertaining to review of applications, permit eligibility, application information, applicant, operator, and permittee information, automated information entry and maintenance, permit suspension and rescission, ownership and control findings and challenge procedures, transfer, assignment, or sale of permit rights, and alternative enforcement. Pursuant to 30 CFR 732.17(d), OSMRE notified Montana on October 2, 2009, requiring Montana to modify its regulatory program to remain consistent with revised Federal requirements. The 2013 Montana Legislature approved Senate Bill 92, which added language addressing the required changes. Specifically, Senate Bill 92 added language in Section 82–4–227, Montana Code Annotated (MCA), that provided appeal rights pertaining to ownership or control listings in the applicant violator system.

By letter dated July 28, 2021 (FDMS Document ID No. OSM–2021–0006–0001), Montana sent us an amendment to its program under SMCRA (30 U.S.C. 1201 *et seq.*) that proposed revisions to existing Administrative Rules of Montana (ARM) that would satisfy the statutory changes in the MCA, including revisions to 17.24.301, 17.24.302, 17.24.303, 17.24.416, 17.24.418. New provisions in the ARM proposed by Montana that would satisfy the statutory changes in the MCA include 17.24.1229, 17.24.1264, 17.24.1265, 17.24.1266, and 17.24.1267. Montana is also proposing minor revisions to existing ARM that are unrelated to Senate Bill 92, at 17.24.304 (Baseline Information: Environmental Resources), 17.24.308 (Operations Plan), 17.24.313 (Reclamation Plan), 17.24.314 (Plan for Protection of the Hydrologic Balance), 17.24.401 (Filing of Application and Notice), 17.24.403 (Informal Conference), 17.24.425 (Administrative Review), and 17.24.1201 (Frequency and Methods of Inspections) that are unrelated to ownership and control. The full text of the program and/or plan amendment is available for you to read at the locations listed above under **ADDRESSES** or at *www.regulations.gov.*

III. Public Comment Procedures

Under the provisions of 30 CFR 732.17(h), we are seeking your comments on whether the amendment satisfies the applicable program approval criteria of 30 CFR 732.15. If we approve the amendment, it will become part of the State program.

Electronic or Written Comments

If you submit written or electronic comments on the proposed rule during the 30-day comment period, they should be specific, confined to issues pertinent to the proposed regulations, and explain the reason for any recommended change(s). We appreciate any and all comments, but those most useful and likely to influence decisions on the final regulations will be those that either involve personal experience or include citations to and analyses of SMCRA, its legislative history, its implementing regulations, case law, other pertinent State or Federal laws or regulations, technical literature, or other relevant publications.

We cannot ensure that comments received after the close of the comment period (see **DATES**) or sent to an address other than those listed (see **ADDRESSES**) will be included in the docket for this rulemaking and considered.

Public Availability of Comments

Before including your address, phone number, email address, or other personal identifying information in your comment, you should be aware that your entire comment including your personal identifying information, may be made publicly available at any time. While you can ask us in your comment to withhold your personal identifying information from public review, we cannot guarantee that we will be able to do so.

Public Hearing

If you wish to speak at the public hearing, contact the person listed under **FOR FURTHER INFORMATION CONTACT** by 4:00 p.m., MST on January 26, 2022. If you are disabled and need reasonable accommodations to attend a public hearing, contact the person listed under **FOR FURTHER INFORMATION CONTACT**. We will arrange the location and time of the hearing with those persons requesting the hearing. If no one requests an opportunity to speak, we will not hold a hearing.

To assist the transcriber and ensure an accurate record, we request, if possible, that each person who speaks at the public hearing provide us with a written copy of his or her comments. The public hearing will continue on the specified date until everyone scheduled to speak has been given an opportunity to be heard. If you are in the audience and have not been scheduled to speak and wish to do so, you will be allowed to speak after those who have been scheduled. We will end the hearing after everyone scheduled to speak and others present in the audience who wish to speak, have been heard.

Public Meeting

If only one person requests an opportunity to speak, we may hold a public meeting rather than a public hearing. If you wish to meet with us to discuss the amendment, please request a meeting by contacting the person listed under **FOR FURTHER INFORMATION CONTACT**. All such meetings are open to the public and, if possible, we will post notices of meetings at the locations listed under **ADDRESSES**. We will make a written summary of each meeting a part of the administrative record.

IV. Statutory and Executive Order Reviews

Executive Order 12866—Regulatory Planning and Review and Executive Order 13563—Improving Regulation and Regulatory Review

Executive Order 12866 provides that the Office of Information and Regulatory Affairs in the Office of Management and Budget (OMB) will review all significant rules. Pursuant to OMB guidance, dated October 12, 1993, the approval of State program and/or AML plan amendments is exempted from OMB review under Executive Order 12866. Executive Order 13563, which reaffirms and supplements Executive Order 12866, retains this exemption.

Other Laws and Executive Orders Affecting Rulemaking

When a State submits a program amendment to OSMRE for review, our regulations at 30 CFR 732.17(h) require us to publish a notice in the **Federal Register** indicating receipt of the proposed amendment, its text or a summary of its terms, and an opportunity for public comment. We conclude our review of the proposed amendment after the close of the public comment period and determine whether the amendment should be approved, approved in part, or not approved. At that time, we will also make the determinations and certifications required by the various laws and executive orders governing the rulemaking process and include them in the final rule.

List of Subjects in 30 CFR Part 926

Intergovernmental relations, Surface mining, Underground mining.

David Berry,

Regional Director, Western Region.

[FR Doc. 2022–00324 Filed 1–10–22; 8:45 am]

BILLING CODE 4310–05–P

DEPARTMENT OF THE INTERIOR

National Park Service

36 CFR Part 7

[NPS–MORA–31539; PPPWMORAS1 PPMPSPD1Z.YM0000]

RIN 1024–AE66

Mount Rainier National Park; Fishing

AGENCY: National Park Service, Interior.

ACTION: Proposed rule.

SUMMARY: The National Park Service proposes to remove from the Code of Federal Regulations special fishing regulations for Mount Rainier National Park, including those that restrict the take of nonnative species. Instead, the National Park Service would publish closures and restrictions related to fishing in the Superintendent's Compendium for the park. This action would help implement a 2018 Fish Management Plan that aims to conserve native fish populations and restore aquatic ecosystems by reducing or eliminating nonnative fish.

DATES: Comments must be received by 11:59 EDT on March 14, 2022.

ADDRESSES: You may submit comments, identified by Regulation Identifier Number (RIN) 1024–AE66, by either of the following methods:

- *Federal eRulemaking Portal: www.regulations.gov*. Follow the instructions for submitting comments.
- *Mail or hand deliver to:* National Park Service, Mount Rainier National Park, Attn: Superintendent, 55210 238th Avenue East, Ashford, WA 98304.

Instructions: Comments will not be accepted by fax, email, or in any way other than those specified above. All submissions received must include the words ''National Park Service'' or ''NPS'' and must include the docket number or RIN (1024–AE66) for this rulemaking. Comments received may be posted without change to *www.regulations.gov,* including any personal information provided.

Docket: For access to the docket to read background documents or comments received, go to *www.regulations.gov* and search for ''1024–AE66.''

FOR FURTHER INFORMATION CONTACT: Kevin Skerl, Chief of Natural and Cultural Resources, Mount Rainier National Park, National Park Service; phone: (360) 569–2211; email: *kevin_skerl@nps.gov*.

SUPPLEMENTARY INFORMATION:

Background

Significance of the Park

Mount Rainier National Park encompasses 236,381 acres in west central Washington, on the western and eastern slopes of the Cascade Range. About 83 percent of the park is located in Pierce County and 17 percent is located in Lewis County. The park's northern boundary is approximately 65 miles southeast of the Seattle-Tacoma metropolitan area and 65 miles west of Yakima. The elevations of the park range from about 1,400 feet at the Tahoma Woods Administrative Site to 14,410 feet at the summit of Mount Rainier. About two million people visit the park annually, with most visitation (75 percent) occurring between June and September. In 1988, Congress designated approximately 97 percent (228,480 acres) of the park as wilderness under the Washington Park Wilderness Act.

The focal point of the park is Mount Rainier, a towering snow- and ice-covered volcano that is a prominent landmark in the Pacific Northwest. Mount Rainier is the second most seismically active and most hazardous volcano in the Cascade Range. The 26 major glaciers that flank the upper mountain cover 35 square miles. Steep glaciated valleys and ice carved peaks dominate the park landscape. The Carbon, Mowich, White, West Fork White, Nisqually, South Puyallup, and North Puyallup rivers and their tributaries carry water from Mount Rainier to the Puget Sound. The Ohanapecosh and Muddy Fork Cowlitz flow into the Cowlitz River and on into the Columbia River. There are approximately 470 mapped rivers and streams, including approximately 383 perennial streams and 84 intermittent streams. With very few exceptions, park rivers and streams originate within the park. There are approximately 382 lakes and ponds, and over 3,000 acres of other wetland types (*e.g.,* mineral geothermal springs, waterfalls) in the park. Approximately 29 of these lakes are in designated wilderness. Among those waterbodies not in wilderness are the Littorals Pond (White River watershed) and Mowich and Tipsoo lakes.

Fish Resources in the Park

The following 15 fish species are present in the rivers, streams and lakes within the park. Of these, 8 are native and 7 are nonnative.

No.	Scientific name	Common name	Occurrence
1	*Oncorhynchus mykiss*	rainbow trout	Native (in some locations).
2	*Oncorhynchus clarkii clarkii*	coastal cutthroat trout	Native.
3	*Salvelinus confluentus*	bull trout	Native.

No.	Scientific name	Common name	Occurrence
4	*Oncorhynchus kisutch*	coho salmon	Native.
5	*Oncorhynchus tshawytscha*	chinook salmon	Native.
6	*Oncorhynchus gorbuscha*	pink salmon	Native.
7	*Prosopium williamsoni*	mountain whitefish	Native.
8	*Cottus confusus*	shorthead sculpin	Native.
9	*Cottus cognatus*	slimy sculpin	Nonnative.
10	*Cottus rhotheus*	torrent sculpin	Nonnative.
11	*Oncorhynchus clarkii bouvieri*	Yellowstone cutthroat trout	Nonnative.
12	*Oncorhynchus clarkii lewisi*	westslope cutthroat trout	Nonnative.
13	*Salvelinus fontinalis*	brook trout	Nonnative.
14	*Gasterosteus aculeatus*	Alaskan stickleback, threespined stickleback	Nonnative.
15	*Oncorhynchus nerka*	kokanee salmon	Nonnative.

Fish populations naturally occur within the park in the nine large valley bottom rivers and their tributary junctions up to natural fish barriers. These rivers bear native fish populations of bull trout (*Salvelinus confluentus*), coastal cutthroat trout (*Oncorhynchus clarkii clarkii*), coho salmon (*O. kisutch*), rainbow (steelhead) trout (*O. mykiss*), Chinook salmon (*O. tshawytscha*), pink salmon (*O. gorbuscha*), mountain whitefish (*Prosopium williamsoni*) and shorthead sculpin (*Cottus confusus*). Nonnative sculpins present in the rivers include slimy sculpin (*C. cognatus*) and torrent sculpin (*C. rhotheus*).

Prior to stocking efforts, there were no naturally occurring fish populations in any of the approximately 382 mapped lakes and ponds in the park. With the exception of those mentioned above, most of the mapped streams were also originally fishless. Early in the park's history, the National Park Service (NPS) and others, including the state, introduced nonnative stocks of rainbow trout (*O. mykiss*), westslope cutthroat trout (*O. clarkii lewisi*), Yellowstone cutthroat trout (*O. clarkii bouvieri*), brook trout (*Salvelinus fontinalis*), and kokanee salmon (*O. nerka*) to enhance recreational fishing. According to unpublished park records, official stocking occurred from 1915 through 1964 (49 years) in 38 streams, and from 1915 through 1972 (57 years) in 44 lakes. Stocking fish resulted in reproducing populations of nonnative fish in naturally fishless lakes. It also resulted in reproducing populations of nonnative fish in some rivers and streams where they compete with native fish. Additional unauthorized introductions of nonnative fish, including threespined stickleback (*Gasterosteus aculeatus*), have occurred since stocking ended. Reproducing populations of nonnative fish are now present in approximately 35 lakes and all of the park watersheds, including many streams and the nine major rivers.

The presence of nonnative fish in the park has had widespread adverse effects on the distribution, abundance, age structure, genetics and behavior of native fish species, amphibians and other aquatic life. Nonnative fish prey on and compete with native fish, particularly bull trout. As a result, over time, populations of native fish within and outside the park have likely diminished where brook trout and other nonnative fish populations have been established. The U.S. Fish and Wildlife Service (USFWS) and National Marine Fisheries Service (NMFS) have listed populations of bull trout, Chinook salmon, and steelhead within the park as threatened under the Endagered Species Act (ESA). In 2010, the USFWS designated approximately 30 miles of streams in the park as bull trout critical habitat. In 2015, the USFWS issued a Bull Trout Recovery Plan that identified actions the NPS should take to protect bull trout within the park.

NPS Authority To Manage Fishing

The NPS has sole and exclusive jurisdiction over the lands and waters within Mount Rainier National Park. 16 U.S.C. 95. The park's enabling act directs the Secretary of the Interior, acting through the NPS, to make such regulations as the Secrerary deems necessary or proper to care for the park, including regulations that provide against the wanton destruction of the fish and game found within the park, and against their capture or destruction for the purposes of merchandise or profit. 16 U.S.C. 92. The NPS administers the park as a unit of the National Park System and has the authority to regulate the use of the park as it considers necessary or proper. 54 U.S.C. 100751(a). This includes the authority to regulate activities on water located within the park that is subject to the jurisdiction of the United States. 54 U.S.C. 100751(b).

NPS Management Framework for Fishing

General NPS fishing regulations are found in 36 CFR 2.3 and apply to all units of the National Park System. For example, § 2.3(d)(4) prohibits commercial fishing in NPS units, except where specifically authorized by Federal statute. Recreational fishing is allowed within NPS areas in accordance with state law, provided that the state law does not conflict with NPS fishing regulations. 36 CFR 2.3(a). Special fishing regulations are found in 36 CFR part 7 and apply only in specific NPS units that have promulgated special regulations for this purpose. Other NPS closures and restrictions related to fishing are established by the Superintendent under his or her discretionary authority in 36 CFR 1.5. This authority allows Superintenents to close all or a portion of a park area to a specific use or activity or impose conditions or restrictions on a use or activity. Pursuant to 36 CFR 1.7(b), these actions are compiled and maintained in what is commonly known as the Superintendent's Compendium, which is typically available on the unit's website, and do not appear in 36 CFR. Actions taken by the Superintendent under the authority in 36 CFR 1.5 may not conflict with regulations found in the CFR, including the general fishing regulations in § 2.3.

NPS Management of Fishing in the Park

Special fishing regulations for Mount Rainier National Park are found in 36 CFR 7.5(a). These regulations were issued in 1969 (34 FR 17520) and last amended in 1976 (41 FR 14863). They close the following areas of the park to all fishing: (i) Tipsoo Lake; (ii) Shadow Lake; (iii) Klickitat Creek above the White River entrance water supply intake; (iv) Laughingwater Creek above the Ohanapecosh water supply intake; (v) Frozen Lake; (vi) Reflection Lakes; and (vii) Ipsut Creek above the Ipsut Creek Campground water supply intake. 36 CFR 7.5(a)(1). Except for fishing with

artificial flies, the special regulations also close the Ohanapecosh River and its tributaries to all fishing. 36 CFR 7.5(a)(2). The regulations state that there shall be no minimum size limit on fish that may be possessed. 36 CFR 7.5(a)(3). The regulations state that the daily catch and possession limit for fish taken from park waters shall be 6 pounds and 1 fish, not to exceed 12 fish. 36 CFR 7.5(a)(4).

Other closures and restrictions related to fishing appear in the Superintendent's Compendium for the park, which is available on the park's website at *https://www.nps.gov/mora/learn/management/lawsandpolicies.htm*. Several of these closures and restrictions are intended to conserve native fish species and reduce or eliminate nonnative species. The Compendium states that all native fish species caught in streams must be released, but that the retention of kokanee and brook trout (both nonnative species) is permitted with no limit. The purpose of this action is to protect native fish species by requiring catch-and-release and to reduce populations of nonnative species by allowing them to be removed from the park. The Compendium closes Fryingpan Creek above the confluence of the White River to all fishing. This closure was established to protect native fish species (bull trout, Chinook salmon, and steelhead) that are listed as threatened under the ESA. The Compendium also closes Ghost Lake and Edith Creek Basin above the Paradise water supply to protect the potable water supply for White River and Paradise. The Compendium establishes fishing seasons for streams and rivers to protect the spawning season of listed, native species. Where fishing is allowed in lakes, there are no seasonal closures because, as noted above, fish are not native to lakes within the park.

In September 2017, the NPS published a Fish Management Plan/Environmental Assessment (the Plan). The purpose of the Plan is to direct long-term management for fish within lakes, rivers and streams within the park. During the development of the Plan, the NPS solicited information from the USFWS, the NMFS, the Washington Department of Fish and Wildlife, the Washington State Historic Preservation Office, and six affiliated American Indian tribes: The Nisqually Tribe of Indians, the Muckleshoot Indian Tribe, the Cowlitz Indian Tribe, the Puyallup Tribe of Indians, the Squaxin Island Tribe, and the Confederated Tribes and Bands of the Yakama Nation. The U.S. Forest Service, Mount Baker-Snoqualmie National Forest, also submitted comments during the public scoping period that occurred before the Plan was published. The Plan was open for a 30-day public comment period.

On August 28, 2018, the Regional Director for Department of the Interior Unified Regions 8, 9, and 10 (formerly the Pacific West Region) approved a Finding of No Significant Impact (FONSI) selecting Alternative 2 in the Plan for implementation. This alternative calls for site-specific management actions to encourage recreational fishing opportunities for nonnative species and to protect native fish and habitat. In addition to increasing recreational angling opportunities for nonnative species, the alternative calls for suppressing or eradicating nonnative fish populations through administrative actions such as gillnetting, seining, electrofishing, and piscicides in selected locations. The selected alternative is consistent with actions required by the 2015 Bull Trout Recovery Plan issued by the USFWS. The NPS expects the eradication or suppression of nonnative fish to result in the increased survival and abundance of threatened and endangered species (bull trout, chinook salmon and steelhead) and improved habitat for native species. The Plan, which contains a full description of the purpose and need for taking action, the alternatives considered, and the environmental impacts associated with the considered alternatives, and the FONSI may be viewed on the park's planning website at *https://parkplanning.nps.gov/mora* by clicking on the link entitled ''2018 Mount Rainier National Park Fisheries Management Plan Environmental Assessment and Finding of No Significant Impact'' and then clicking on the link entitled ''Document List.''

Proposed Rule

The proposed rule would remove special fishing regulations for the park that interfere with the successful implementation of the fish management strategy identified in the FONSI. These include the following closures and restrictions that limit the take of nonnative fish: (1) Closures at Ipsut Creek and (except for artificial flyfishing) the Ohanapecosh River; and (2) a daily catch and possession limit of six pounds and one fish, not to exceed 12 fish. Removing these closures and restrictions would create new angling opportunities for nonnative species that are currently not authorized by 36 CFR 7.5. The other closures and restrictions currently codified in the special regulations will be relocated to and maintained in the Superintendent's Compendium because either they are necessary to protect the domestic potable water supply for White River, Sunrise, Ohanapecosh, and Paradise (the closures of Frozen Lake and streams with identified water supply intakes); or to protect fragile riparian vegetation (the closures of Tipsoo Lake, Shadow Lake and Reflection Lakes). Closures and restrictions in the special regulations also apply to the take of native fish species. These will be retained or modified in the Superintendent's Compendium, consistent with the selected alternative in the FONSI, to help restore the natural abundance, diversity, dynamics, distribution, habitats and behaviors of native fish populations that were present in the park prior to the introduction of nonnative fish. The administrative flexibility offered by the Superintendent's Compendium, which in most circumstances can be modified without notice and comment rulemaking (see 36 CFR 1.5(b)), provides a feasible and responsive method to meet the strategic goals identified in the FONSI to utilize adaptive management to alter management activities when needed based on monitoring and best available science. NPS regulations at 36 CFR 1.7(b) require the Superintendent to update the Compendium at least annually. The NPS will ensure that the public has an opportunity to provide meaningful input prior to updating any closures or restrictions related to fishing in the Compendium.

Consolidating all fishing closures and restrictions in the Compendium will make them more accessible and user-friendly for the public. Instead of having to look in two different places (the special regulations in 36 CFR 7.5 and the Superintendent's Compendium on the park's website), the public would be able to find all closures and restrictions related to fishing in one place. The NPS has already done this, informally, by producing a fishing pamphlet that is available at the park's website at *https://www.nps.gov/mora/planyourvisit/fishing-and-boating.htm*. Moving all of the closures and restrictions related to fishing into the Compendium would consolidate the official versions of them in one place for legal purposes. Centralizing them in the Compendium would increase compliance, strengthen enforcement, and decrease public confusion and frustration. The NPS routinely responds to inquiries and requests for clarification from the State of Washington and members of the public regarding fishing opportunites

and rules within the park. Placing all fishing closures and restrictions in the Compendium would make it easier for visitors to understand the rules and become better stewards of fishery resource at the park. In order to direct the public to the Compendium, the NPS proposes to replace the existing language in paragraph (a) of § 7.5 with a general statement that the Superintendent will establish fishing closures and restrictions, based on management objectives described in the park's resource management plans, in accordance with the criteria and procedures in 36 CFR 1.5 and 1.7, including publication in the Superintendent's Compendium. The rule would also state that fishing in closed waters or violating a fishing restriction established by the Superintendent is prohibited. Similar language is used in the special regulations for other NPS units, including Glacier National Park (36 CFR 7.3) and Rocky Mountain National Park (36 CFR 7.7).

Compliance With Other Laws, Executive Orders and Department Policy

Regulatory Planning and Review (Executive Orders 12866 and 13563)

Executive Order 12866 provides that the Office of Information and Regulatory Affairs in the Office of Management and Budget will review all significant rules. The Office of Information and Regulatory Affairs has determined that this rule is not significant.

Executive Order 13563 reaffirms the principles of Executive Order 12866 while calling for improvements in the Nation's regulatory system to promote predictability, to reduce uncertainty, and to use the best, most innovative, and least burdensome tools for achieving regulatory ends. The Executive order directs agencies to consider regulatory approaches that reduce burdens and maintain flexibility and freedom of choice for the public where these approaches are relevant, feasible, and consistent with regulatory objectives. Executive Order 13563 emphasizes further that regulations must be based on the best available science and that the rulemaking process must allow for public participation and an open exchange of ideas. We have developed this rule in a manner consistent with these requirements.

Regulatory Flexibility Act

This rule will not have a significant economic effect on a substantial number of small entities under the Regulatory Flexibility Act (5 U.S.C. 601 *et seq.*). This certification is based on information contained in the economic analyses found in the report entitled ''Cost-Benefit and Regulatory Flexibility Threshold Analyses: Proposed Rule to Remove Special Regulations for Fishing at Mount Rainier National Park.'' The document may be viewed on the park's planning website at *https://parkplanning.nps.gov/mora* by clicking on the link entitled ''2018 Mount Rainier National Park Fisheries Management Plan Environmental Assessment and Finding of No Significant Impact'' and then clicking on the link entitled ''Document List.''

Congressional Review Act

This rule is not a major rule under 5 U.S.C. 804(2). This rule:

(a) Does not have an annual effect on the economy of $100 million or more.

(b) Will not cause a major increase in costs or prices for consumers, individual industries, federal, State, or local government agencies, or geographic regions.

(c) Does not have significant adverse effects on competition, employment, investment, productivity, innovation, or the ability of U.S.-based enterprises to compete with foreign-based enterprises.

Unfunded Mandates Reform Act

This rule would not impose an unfunded mandate on State, local, or tribal governments or the private sector of more than $100 million per year. The rule would not have a significant or unique effect on State, local or tribal governments or the private sector. It addresses public use of national park lands, and imposes no requirements on other agencies or governments. A statement containing the information required by the Unfunded Mandates Reform Act (2 U.S.C. 1531 *et seq.*) is not required.

Takings (Executive Order 12630)

This rule would not effect a taking of private property or otherwise have takings implications under Executive Order 12630. A takings implication assessment is not required.

Federalism (Executive Order 13132)

Under the criteria in section 1 of Executive Order 13132, the rule would not have sufficient federalism implications to warrant the preparation of a federalism summary impact statement. This proposed rule only affects use of federally-administered lands and waters. It has no outside effects on other areas. A federalism summary impact statement is not required.

Civil Justice Reform (Executive Order 12988)

This rule complies with the requirements of Executive Order 12988. This rule:

(a) Meets the criteria of section 3(a) requiring that all regulations be reviewed to eliminate errors and ambiguity and be written to minimize litigation; and

(b) Meets the criteria of section 3(b)(2) requiring that all regulations be written in clear language and contain clear legal standards.

Consultation With Indian Tribes (Executive Order 13175 and Department Policy)

The Department of the Interior strives to strengthen its government-to-government relationship with Indian Tribes through a commitment to consultation with Indian tribes and recognition of their right to self-governance and tribal sovereignty. We have evaluated this rule under the criteria in Executive Order 13175 and under the Department's tribal consultation policy and have determined that tribal consultation is not required because the rule will have no substantial direct effect on federally recognized Indian tribes. During scoping for the Plan, the NPS solicited comments from six affiliated American Indian tribes: The Nisqually Tribe of Indians, the Muckleshoot Indian Tribe, the Cowlitz Indian Tribe, the Puyallup Tribe of Indians, the Squaxin Island Tribe, and the Confederated Tribes and Bands of the Yakama Nation. The NPS will continue to work with these tribes throughout the rulemaking process and implementation of the selection action in the Plan.

Paperwork Reduction Act

This rule does not contain information collection requirements, and a submission to the Office of Management and Budget under the Paperwork Reduction Act is not required. We may not conduct or sponsor and you are not required to respond to a collection of information unless it displays a currently valid Office of Management and Budget (OMB) control number.

National Environmental Policy Act (NEPA)

The NPS has prepared the Plan to determine whether this rule will have a significant impact on the quality of the human environment under the NEPA. This rule does not constitute a major Federal action significantly affecting the quality of the human environment. A detailed statement under the NEPA is

not required because of the FONSI. A copy of the Plan and FONSI may be viewed on the park's planning website at *https://parkplanning.nps.gov/mora* by clicking on the link entitled ''2018 Mount Rainier National Park Fisheries Management Plan Environmental Assessment and Finding of No Significant Impact'' and then clicking on the link entitled ''Document List.''

Effects on the Energy Supply (Executive Order 13211)

This rule is not a significant energy action under the definition in Executive Order 13211. A Statement of Energy Effects is not required.

Clarity of This Rule

We are required by Executive Orders 12866 (section 1(b)(12)) and 12988 (section 3(b)(1)(B)), and 13563 (section 1(a)), and by the Presidential Memorandum of June 1, 1998, to write all rules in plain language. This means that each rule we publish must:

(a) Be logically organized;

(b) Use the active voice to address readers directly;

(c) Use common, everyday words and clear language rather than jargon;

(d) Be divided into short sections and sentences; and

(e) Use lists and tables wherever possible.

If you feel that we have not met these requirements, send us comments by one of the methods listed in the **ADDRESSES** section. To better help us revise the rule, your comments should be as specific as possible. For example, you should tell us the numbers of the sections or paragraphs that you find unclear, which sections or sentences are too long, the sections where you feel lists or tables would be useful, etc.

Public Participation

It is the policy of the Department of the Interior, whenever practicable, to afford the public an opportunity to participate in the rulemaking process. Accordingly, interested persons may submit written comments regarding this proposed rule by one of the methods listed in the **ADDRESSES** section of this document.

Public Availability of Comments

Before including your address, phone number, email address, or other personal identifying information in your comment, you should be aware that your entire comment—including your personal identifying information—may be made publicly available at any time. While you can ask us in your comment to withhold your personal identifying information from public review, we cannot guarantee that we will be able to do so.

List of Subjects in 36 CFR Part 7

District of Columbia, National parks, Reporting and recordkeeping requirements.

In consideration of the foregoing, the National Park Service proposes to amend 36 CFR part 7 as follows:

PART 7—SPECIAL REGULATIONS, AREAS OF THE NATIONAL PARK SYSTEM

■ 1. The authority for part 7 continues to read as follows:

Authority: 54 U.S.C. 100101, 100751, 320102; Sec. 7.96 also issued under D.C. Code 10–137 and D.C. Code 50–2201.07.

■ 2. In § 7.5, revise paragraph (a) to read as follows:

§ 7.5 Mount Rainier National Park.

(a) *Fishing.* (1) Fishing closures and restrictions, based on management objectives for the preservation of the park's natural resources, are established by the Superintendent.

(2) The Superintendent may establish closures and restrictions, in accordance with the criteria and procedures of § 1.5 of this chapter, on any activity pertaining to fishing, including, but not limited to species of fish that may be taken, seasons and hours during which fishing may take place, methods of taking, and size, creel, and possession limits.

(3) Except in emergency situations, the Superintendent will notify the public of any such closures or restrictions through one or more methods listed in § 1.7 of this chapter, including publication in the Superintendent's Compendium (or written compilation) of discretionary actions referred to paragraph (b) of § 1.7.

(4) Fishing in closed waters or violating a condition or restriction established by the Superintendent under this paragraph (a) is prohibited.

* * * * *

Shannon A. Estenoz,

Assistant Secretary for Fish and Wildlife and Parks.

[FR Doc. 2022–00231 Filed 1–10–22; 8:45 am]

BILLING CODE 4312–52–P

DEPARTMENT OF HOMELAND SECURITY

Coast Guard

46 CFR Part 2

[Docket No. USCG–2018–0538]

RIN 1625–AC55

User Fees for Inspected Towing Vessels

AGENCY: Coast Guard, DHS.

ACTION: Notice of proposed rulemaking.

SUMMARY: The Coast Guard is proposing to update its user fees for seagoing towing vessels that are 300 gross tons or more and to revise user fees for other inspected towing vessels. The Coast Guard is proposing these updates because we are required to establish and maintain a fair fee for our vessel inspection services and to separate the fees for inspection options that involve third-party auditors and surveyors from inspection options that do not involve third parties. Under this proposed rule, vessels using the Alternate Compliance Program, Streamlined Inspection Program, or the Towing Safety Management System options would pay a lower fee than vessels that use the traditional Coast Guard inspection option.

DATES: Comments and related material must be received by the Coast Guard on or before April 11, 2022.

ADDRESSES: You may submit comments identified by docket number USCG–2018–0538 using the Federal eRulemaking Portal at *https://www.regulations.gov.* See the ''Public Participation and Request for Comments'' portion of the **SUPPLEMENTARY INFORMATION** section for further instructions on submitting comments.

FOR FURTHER INFORMATION CONTACT: For information about this document call or email Mr. Scott Kuhaneck, Coast Guard; telephone 202–372–1221, email *Thomas.S.Kuhaneck@uscg.mil.*

SUPPLEMENTARY INFORMATION:

Table of Contents for Preamble

I. Public Participation and Request for Comments
II. Abbreviations
III. Basis and Purpose
A. The Problem We Seek To Address
B. Legal Authority To Address This Problem
C. Recent Legislation
IV. Background
A. Origins of Annual Vessel Inspection Fees
B. Current Fees for Subchapter I and Subchapter M Towing Vessels

V. Discussion of Proposed Rule
A. Categories of Annual Fees
B. Amending Annual Inspection Fees for Seagoing Towing Vessels Subject to Subchapter I
C. Establishing Specific Annual Inspection Fees for Towing Vessels Subject to Subchapter M
D. Methodology for Calculating Fees
VI. Regulatory Analyses
A. Regulatory Planning and Review
B. Small Entities
C. Assistance for Small Entities
D. Collection of Information
E. Federalism
F. Unfunded Mandates Reform Act
G. Taking of Private Property
H. Civil Justice Reform
I. Protection of Children
J. Indian Tribal Governments
K. Energy Effects
L. Technical Standards
M. Environment

I. Public Participation and Request for Comments

The Coast Guard views public participation as essential to effective rulemaking, and will consider all comments and material received during the comment period. Your comment can help shape the outcome of this rulemaking. If you submit a comment, please include the docket number for this rulemaking, indicate the specific section of this document to which each comment applies, and provide a reason for each suggestion or recommendation.

We encourage you to submit comments through the Federal eRulemaking Portal at *https://www.regulations.gov.* If you cannot submit your material by using *https://www.regulations.gov,* contact the person in the **FOR FURTHER INFORMATION CONTACT** section of this proposed rule for alternate instructions. Documents mentioned in this proposed rule as being in the docket, and all public comments, will be available in our online docket at *https://www.regulations.gov,* and can be viewed by following that website's instructions. Additionally, if you visit the online docket and sign up for email alerts, you will be notified when comments are posted or if a final rule is published.

We accept anonymous comments. All comments received will be posted without change to *https://www.regulations.gov* and will include any personal information you have provided. For more about privacy and submissions to the docket in response to this document, see DHS's eRulemaking System of Records notice (85 FR 14226, March 11, 2020).

We do not plan to hold a public meeting but we will consider doing so if public comments indicate that a meeting would be helpful and we determine that a meeting would aid this rulemaking. We would issue a separate **Federal Register** notice to announce the date, time, and location of such a meeting.

II. Abbreviations

ACP Alternate Compliance Program
CGAA Frank LoBiondo Coast Guard Authorization Act of 2018
COI Certificate of Inspection
DHS Department of Homeland Security
FR Federal Register
FTE Full-Time Equivalent
IRFA Initial Regulatory Flexibility Analysis
MISLE Marine Information for Safety and Law Enforcement
NAICS North American Industry Classification System
NPRM Notice of proposed rulemaking
OBRA Omnibus Budget Reconciliation Act of 1990
OMB Office of Management and Budget
RFA Regulatory Flexibility Act
SBA Small Business Administration
§ Section
SIP Streamlined Inspection Program
SSM Sector Staffing Model
TSMS Towing Safety Management System
U.S.C. United States Code

III. Basis and Purpose

In this section, the Coast Guard identifies the problem we intend to address, the well-established statutory authority that enables us to issue this proposed rule, and the recent legislation that provides additional authority for this proposed rulemaking.

A. The Problem We Seek To Address

The Coast Guard and Maritime Transportation Act of 2004 [1] added towing vessels to the list of vessels subject to inspection in 46 U.S.C. 3301. As directed by 46 U.S.C. 3307, each vessel subject to inspection under part A of Subtitle II must undergo an initial inspection for certification, and after receiving a Certificate of Inspection (COI) the vessel must undergo periodic inspections.

On June 20, 2016, we published an *Inspection of Towing Vessels* final rule that established safety regulations governing the inspection, standards, and safety management systems for towing vessels.[2] We estimated that the rule would apply to more than 5,500 towing vessels that had previously been uninspected vessels. That rule established the 46 CFR subchapter M—Towing Vessels (parts 136 through 144), which requires vessels subject to subchapter M to obtain a COI. The phase-in period for obtaining these COIs under subchapter M runs from July 20, 2018 to July 19, 2022.[3]

In the *Inspection of Towing Vessels* final rule, we stated our plan to begin a separate rulemaking for annual inspection fees for towing vessels that would reflect the specific program costs associated with the two options for documenting compliance to obtain a COI,[4] the Coast Guard option and the Towing Safety Management System (TSMS) option.[5] We also stated that until then we will use the existing fee of $1,030 in 46 CFR 2.10–101 that applies to any inspected vessel not listed in Table 2.10–101 as the annual inspection fee for towing vessels subject to subchapter M.[6]

In addition to towing vessels subject to subchapter M that are required to obtain COIs, there are towing vessels that qualify as seagoing motor vessels (300 gross tons or more) that are subject to 46 CFR chapter I, subchapter I regulations for cargo and miscellaneous vessels.[7] These vessels are currently required to have COIs. The annual inspection fee for these subchapter I towing vessels was established in 1995 at $2,915, and has never been updated.[8]

The law requires that we establish a fee for our inspection services that is fair and based on costs to the Government, value to the recipient, and public interest. It further requires that we review the costs to the Government of such inspections for towing vessel using the Coast Guard option and those using an option involving a third party, revise such fees if there is a difference,

[1] Public Law 108–293, 118 Stat. 1028 (August 9, 2004), with relevant chapters codified in 46 U.S.C. 3301.

[2] 81 FR 40004.

[3] *See* 46 CFR 136.202, which calls for 25 percent of the vessels of each owner or managing operator of more than one existing towing vessel to have COIs by July 22, 2019. It calls for an additional 25 percent to obtain COIs for each of the remaining 3 years of the phase-in period. The final rule was effective July 20, 2016, but it delayed the implementation of most of its part 140 Operations, part 141 Lifesaving, part 142 Fire Protection, part 143 Machinery and Electrical Systems and Equipment, and part 144 Construction and Arrangement requirements until July 20, 2018. *See* §§ 140.105, 141.105, 142.105, 143.200, and 144.105.

[4] *See* 46 CFR 136.130—Options for documenting compliance to obtain a Certificate of Inspection.

[5] TSMS is a voluntary inspection option that permits qualified third-party organizations to conduct certain vessel examinations in place of Coast Guard inspections. *See* 46 CFR 138—Towing Safety Management System (TSMS).

[6] *See* 81 FR at 40005.

[7] *See* 46 CFR 2.01–7 and 90.05–1. Under 46 U.S.C. 3301, seagoing motor vessels are subject to inspection. Towing vessels are motor vessels, (vessels propelled by machinery other than steam) and they fall within the definition of ''seagoing motor vessel'' if they are at least 300 gross tons and make voyages beyond the Boundary Line. *See* definitions in 46 U.S.C. 2101.

[8] *See Direct User Fees for Inspection or Examination of U.S. and Foreign Commercial Vessels* (60 FR 13550 (March 13, 1995); 46 CFR 2.10–101.

and comply with the same requirements for establishing fees when doing so.

B. Legal Authority To Address This Problem

The Coast Guard is issuing this proposed rule based on authority in section 2110 of Title 46 of the United States Code (46 U.S.C. 2110), which has been delegated to the Commandant under DHS Delegation No. 0170.1(II)(92). Section 2110 of Title 46 directs the Secretary of the Department in which the Coast Guard is operating to establish a fee or charge for a service or thing of value provided by the Secretary under Subtitle II of Title 46. Inspections and related services described in Subtitle II of Title 46 are considered a service or thing of value provided by the Secretary.[9]

Section 2110 also directs that the fee or charge be established in accordance with 31 U.S.C. 9701, which specifies that each charge be fair and based on the costs to the Government, the value of the service or thing to the recipient, public policy or interest served, and other relevant facts. Consistent with these objectives, once a fee or charge is established, section 2110 allows it to be adjusted to accommodate changes in the cost of providing a specific service or thing of value.

C. Recent Legislation

On December 4, 2018, the Frank LoBiondo Coast Guard Authorization Act of 2018 (CGAA) was enacted.[10] Section 815 of CGAA directs the Coast Guard to review and revise the fee for inspections. First, the Coast Guard must compare the costs to the Government of towing vessel inspections performed by the Coast Guard and towing vessel inspections performed by a third party, to determine if they are different. The Coast Guard interprets ''costs to the Government'' in section 815(a) to mean the cost to the Coast Guard of providing inspection and related services to determine whether a vessel meets requirements necessary for it to maintain its COI. We have conducted that comparison and determined that there is a difference in costs to the Government between the inspection options for towing vessels that involve a third party and those that do not.

If there is a difference in costs, section 815 of CGAA directs us to revise the fee we assess for such inspections to conform to 31 U.S.C. 9701, and to base the fee on the cost to the Government. This is the intent of this notice of proposed rulemaking (NPRM).

[9] 46 U.S.C. 2110(a)(1).

[10] Public Law 115–282, 132 Stat. 4192.

IV. Background

A. Origins of Annual Vessel Inspection Fees

The Omnibus Budget Reconciliation Act of 1990 (OBRA) amended 46 U.S.C. 2110 and removed long-standing prohibitions against imposing certain user fees.[11] As amended by the OBRA, 46 U.S.C. 2110 requires the establishment and collection of user fees for Coast Guard services provided under Subtitle II of Title 46, United States Code. On March 13, 1995, the Coast Guard published the final rule on *Direct User Fees for Inspection or Examination of U.S. and Foreign Commercial Vessels.*[12] The fees were intended to recover the costs associated with providing Coast Guard vessel inspection services directly or through an alternative reinspection program, although alternative reinspection program only applied to certain offshore supply vessels. The final rule established user fees for services related to commercial vessel inspection including annual fees for seagoing towing vessels.

On June 20, 2016, the Coast Guard published the final rule on the *Inspection of Towing Vessels.* The vessels subject to this 2016 rule were not considered when the original vessel inspection fees were established in 1995, except to the extent that the table of fees included a default fee for any inspected vessel not listed. We indicated in the 2016 rule that we would establish specific fees, in a subsequent rulemaking, that would reflect program costs associated with the TSMS and Coast Guard inspection options for obtaining COIs. We stated that until those specific fees were established, the annual inspection fee for towing vessels subject to subchapter M would be the existing fee of $1,030 in 46 CFR 2.10–101 for any inspected vessel not listed in Table 2.10–101.[13]

B. Current Fees for Subchapter I and Subchapter M Towing Vessels

The Coast Guard currently charges an annual vessel inspection fee for U.S. and foreign vessels requiring a COI, following the fee schedule set in § 2.10–101.[14] The current fee for seagoing towing vessels inspected under subchapter I is $2,915 for all inspection options—the Coast Guard, the Alternate Compliance Program (ACP), and the Streamlined Inspection Program (SIP). The current fee for towing vessels inspected under subchapter M (all inspection options) is $1,030, which is the fee for ''[a]ny vessel not listed in this table.''

[11] Public Law 101–508, 104 Stat. 1388 with relevant chapters codified in 46 U.S.C. 2110.

[12] 60 FR 13550.

[13] *See* 81 FR at 40005.

[14] Under 46 CFR 2.01–6(b), foreign vessels from countries which are non-signatory to the International Convention for the Safety of Life at Sea, 1974, are issued a COI, if the inspector approves the vessel and its equipment as described in § 2.01–5. We have records of COIs issued to foreign vessels in our Marine Information for Safety and Law Enforcement (MISLE) database, but no records of a COI issued to a foreign towing vessel.

V. Discussion of Proposed Rule

This proposed rule would update existing annual inspection fees for both seagoing towing vessels (300 gross tons or more) and vessels subject to the relatively new towing-vessel regulations in 46 CFR subchapter M.

The annual inspection fees are located in 46 CFR part 2—Vessel Inspections. In addition to fees in § 2.10–101, this part contains definitions in § 2.10–25. We propose to add the following new defined terms to § 2.10–25—

- *Annual vessel inspection fee;*
- *Alternate Compliance Program option;*
- *Coast Guard option;*
- *Streamlined Inspection Program option;*
- *Towing Safety Management System option;* and
- *Towing vessel.*

To reflect the involvement of third parties in inspection options, such as the ACP and TSMS, we propose to define ''annual vessel inspection fee'' as the fee charged by the Coast Guard for providing inspection and related services to determine whether a vessel meets the requirements to maintain its COI. The fee charged by the Coast Guard reflects the cost to the Coast Guard. There are several existing options for inspection, which we propose to define in revised § 2.10–25 by reference to the regulations that establish each option. For both seagoing and subchapter M towing vessels, there is a Coast Guard option in which the Coast Guard performs all of the relevant inspection activity. For both types of vessels there is also a third-party option, already established in regulation, in which a third party performs some of the relevant activity, but the Coast Guard still inspects the vessel and examines evidence of compliance provided by third parties.

For seagoing towing vessels there is an additional option, the SIP. The SIP option does not involve a third party. Under the SIP option, a vessel is inspected in accordance with an approved Vessel Action Plan that the company's SIP agent develops with

guidance from the Coast Guard. In our definition of SIP, we point to subpart E of 46 CFR part 8, which spells out SIP program requirements.

We propose to define ''towing vessel'' as a commercial vessel engaged in or intending to engage in the service of pulling, pushing, or hauling alongside, or any combination of pulling, pushing, or hauling alongside. This definition matches the definition of towing vessel in 46 U.S.C. 2101.

We are also proposing to modify the definition of an existing term in § 2.10–25, *Sea-going towing vessel.* We would remove the modifier ''seagoing'' used within the definition itself, and insert a description of what seagoing means. The proposed insertion is ''and that makes voyages beyond the Boundary Line as defined by 46 U.S.C. 103.'' [15] We would further specify that the vessel must be 300 gross tons or more, to distinguish seagoing towing vessels from towing vessels subject to subchapter M that travel beyond the Boundary Line. We would also remove the hyphen from seagoing.

A. Categories of Annual Fees

For towing vessels subject to subchapter M, we propose two fee categories; the Coast Guard option and the TSMS option. For seagoing towing vessels subject to subchapter I, we propose three fee categories; the Coast Guard option, the ACP option and the SIP option. This would allow the Coast Guard to provide reduced fees for subchapter M vessel owners who choose the TSMS option described in 46 CFR part 138, and for subchapter I vessel owners who choose the ACP or SIP option described in 46 CFR part 8. We anticipate this fee structure will help to ensure the Coast Guard's ability to recover full costs to the Government, and to separate annual inspection fees for options involving third-party surveys and audits of towing vessels using safety management systems. Several inspection options have lower user fees than the Coast Guard option. These inspection alternatives either require fewer Coast Guard inspection activities or the Coast Guard inspection activities take less time and thus have a lower cost.

B. Amending Annual Inspection Fees for Seagoing Towing Vessels Subject to Subchapter I

We are proposing to charge one of three annual fees for seagoing towing vessels that are inspected under subchapter I:

- $2,747 for those using the Coast Guard option;
- $1,850 for those using the ACP option; and
- $2,260 for those using the SIP option.

The current annual fee for seagoing towing vessels that are inspected under subchapter I is $2,915.

For a detailed discussion of how these fees were derived, see Methodology for Calculating Fees in section V.D.

C. Establishing Specific Annual Inspection Fees for Towing Vessels Subject to Subchapter M

We are also proposing to charge one of two fees for towing vessels inspected under subchapter M:

- $2,184 for those using the Coast Guard option, and
- $973 for those using the TSMS option.

The current annual fee applied to subchapter M towing vessels is $1,030.

For a more detailed discussion of how these fees were derived, see Methodology for Calculating Fees in section V.D.

D. Methodology for Calculating Fees

This section summarizes the methodology for calculating fees. For more details, see the *Cost Study for Determining User Fees for Inspected Towing Vessels* in the docket where indicated under the section I of this preamble.

To derive the costs of the various inspection types, we used an activity-based costing [16] approach in conjunction with the Sector Staffing Model (SSM). The SSM is an activity-based model designed to establish human capital requirements and quantify resources at Shore Forces units.[17] The SSM measures specific activity and frequency to determine the Full-Time Equivalent (FTE) workforce needed to meet a particular workload. Data in the model is derived from Coast Guard enterprise databases and surveys conducted at the Coast Guard field unit level. The model also incorporates unit specific travel times for conducting missions, collateral duty workload, and mission required training. In the spring of 2012, the SSM was accredited in accordance with official Coast Guard policy and currently serves as the primary decision tool for managing sector enterprise staffing. Table 1 shows the cost of activities for providing COI services to each type of inspection. These costs are derived using SSM FTE calculations; see the Cost Study in the docket for the full derivation of figures.

TABLE 1—PER VESSEL COST OF ACTIVITIES FOR PROVIDING COI SERVICES BY USER FEE SEGMENT

	Subchapter M: Coast Guard	Subchapter M: TSMS	Subchapter I: Coast Guard	Subchapter I: ACP	Subchapter I: SIP
Inspection Activity Costs	$1,183	$408	$1,618	$874	$1,213
Travel Costs	317	40	356	356	356
Supervision and Administration Costs	243	84	332	179	249
Indirect Costs	442	442	442	442	442
Total Annual Costs	2,184	973	2,747	1,850	2,260

The Coast Guard intends to collect one of five different user fees from the approximately 5,385 towing vessels that require COIs under subchapters I and M.[18] Table 2 shows the current fee, the proposed fee, the incremental fee adjustment and the percent change to the user fee. The annual costs of services for each vessel class is the proposed user fee for that vessel class.

[15] Under 46 U.S.C. 103 and 33 U.S.C. 151(b), boundary lines are used for dividing inland waters of the United States from the high seas to delineate the application of certain U.S. statutes. For a list of boundary lines and the statutes those lines are used to delineate, see 46 CFR part 7, which lists boundary lines for the Atlantic Coast, Gulf Coast, Pacific Coast, and the states of Alaska and Hawaii.

[16] Activity-based costing is a method for determining the cost of a service based on the cost of each individual element of that service.

[17] Shore Forces units are Coast Guard sector commands and their sub-units or field units. *See* the USCG Strategic Cost Manual, M7000.4 (February 2005).

[18] Vessel population data came from MISLE as of June 2021. *See* the *Affected Population* section for more details.

TABLE 2—CURRENT SUBCHAPTER M AND I USER FEES AND PROPOSED USER FEE ADJUSTMENT AMOUNTS

Fee type/user fee class	Current fee	Proposed fee	Incremental fee adjustment	Percent change
Subchapter M: Coast Guard option	$1,030	$2,184	$1,154	112
Subchapter M: TSMS	1,030	973	−57	−6
Subchapter I: Coast Guard option	2,915	2,747	−168	−6
Subchapter I: Alternative Compliance Program option	2,915	1,850	−1,065	−37
Subchapter I: Streamlined Inspection Program option	2,915	2,260	−655	−22

VI. Regulatory Analyses

We developed this proposed rule after considering numerous statutes and Executive orders related to rulemaking. Our analyses based on these statutes or Executive orders follows.

A. Regulatory Planning and Review

Executive Orders 12866 (Regulatory Planning and Review) and 13563 (Improving Regulation and Regulatory Review) direct agencies to assess the costs and benefits of available regulatory alternatives and, if regulation is necessary, to select regulatory approaches that maximize net benefits (including potential economic, environmental, public health and safety effects, distributive impacts, and equity). Executive Order 13563 emphasizes the importance of quantifying costs and benefits, reducing costs, harmonizing rules, and promoting flexibility.

This proposed rule is a significant regulatory action under section 3(f) of Executive Order 12866. Accordingly, the rule has been reviewed by the Office of Management and Budget (OMB). Section 6(a)(3) of Executive Order 12866 requires an assessment of potential costs and benefits. The analysis follows.

Currently, towing vessels are inspected under subchapter I or subchapter M, dependent on their size and area of operation. All inspected towing vessels are required to pay a user fee. Subchapter I towing vessels pay a user fee of $2,915 annually. Subchapter M towing vessels pay a user fee of $1,030 annually. The subchapter M user fee is not specific to towing vessels, rather it is for all inspected vessels that do not have a specific user fee on Table 2.10–101.

We calculate that in total 42 towing vessels inspected under subchapter I are paying $122,430 annually and that in total 5,343 towing vessels inspected under subchapter M are paying $5,503,290 annually for inspection services. Towing vessels choose between several vessel inspection alternatives. Once selected, the inspection option is unlikely to change due to a change in user fees, since there are private business costs associated with changing inspection options. Coast Guard COI service costs are fully funded through annual appropriations.[19]

This proposed rulemaking would establish a user fee specific to subchapter M towing vessels, revise the user fee specific to subchapter I towing vessels, and establish user fees for vessel inspection alternatives that require fewer Coast Guard inspection activities or the Coast Guard inspection activities take less time and thus have a lower cost to Coast Guard. We anticipate this proposed fee structure will help to ensure the Coast Guard's ability to offset costs to the government, and to separate annual inspection fees for options involving third-party surveys and audits of towing vessels using safety management systems. This proposed rule would result in estimated transfers from towing vessel operators for the COI services of $1.5 million to $1.6 million per year to the Federal Government. The 10-year transfers, undiscounted, total $15,719,319. The discounted annualized figure, at 7 percent, is $1,577,491.

The Coast Guard proposes to do the following through this rulemaking:

(1) Modify the definition in § 2.10–25 of *Sea-going towing vessel.* We would remove the modifier ''seagoing'' used within the definition, and replace it with a description of what ''seagoing'' means. The proposed insertion is ''and that makes voyages beyond the Boundary Line as defined by 46 U.S.C. 103.'' Also, we would specify that the vessel must be 300 gross tons or more to distinguish seagoing towing vessels from towing vessels that travel beyond the Boundary Line, which may be subject to subchapter M. This is an administrative change and it would have no economic impact.

(2) Amend the user fees for 46 CFR subchapter I towing vessels. The current fee for the 42 seagoing towing vessels inspected under subchapter I is $2,915 for all inspection options (Coast Guard, ACP, and SIP). This proposed rule would make the fees specific to each inspection as shown below in table 3. Vessels have already chosen their inspection option and are unlikely to change away from their current option. This is because there are costs associated with switching inspection options and there are private industry transactions and business specific costs beyond the inspection cost that make the user fee a small portion of the overall cost of inspections.

TABLE 3—CURRENT AND PROPOSED SUBCHAPTER I TOWING VESSEL USER FEES

Inspection type	Current fee	Proposed fee
Coast Guard option	$2,915	$2,747
Alternate Compliance Program option (ACP)		1,850
Streamlined Inspection Program option (SIP)		2,260

(3) Create a specific user fee category for the 5,343 towing vessels under 46 CFR subchapter M towing vessels in the table of fees in § 2.10–101 and update the current user fees for annual inspection fees for towing vessels to reflect the specific program costs associated with the two subchapter M options: The TSMS option and the Coast Guard inspection option. The current fee is $1,030 for the annual inspection fee for towing vessels subject to

[19] The user fees collected for these services are offsetting receipts and are deposited to the Department of Treasury and credited to DHS appropriation as proprietary receipts. *See* 46 U.S.C. 2110(h).

subchapter M. This proposed rule would make the fees specific to each inspection type as shown below in table 4. Similar to subchapter I vessels, subchapter M vessels have already chosen their inspection option and are unlikely to change for the same reasons.

TABLE 4—CURRENT AND PROPOSED SUBCHAPTER M TOWING VESSEL USER FEES

Inspection type	Current fee	Proposed fee
Coast Guard option	$1,030	$2,184
TSMS option		973

(4) Define the following new terms that will be added to the table of fees in § 2.10–101: *Annual vessel inspection fee, Alternative Compliance Program option, Coast Guard option, Streamlined Inspection Program option, Towing Safety Management System option,* and *Towing Vessel.* This is an administrative change and has no economic impact. All of these points are described in greater detail in the Cost Study.

To obtain the affected population for this proposed rule, we used the MISLE (Marine Information for Safety and Law Enforcement) database. MISLE is the Coast Guard's vessel and marine activity database which contains the best and most readily available vessel population data. According to MISLE data as of June 2021, the total affected population of this rule is 5,385 inspected towing vessels. There are approximately 5,343 towing vessels that will require inspection under 46 CFR subchapter M and 42 towing vessels that are inspected under 46 CFR subchapter I. Though the subchapter M population is decreasing by an average of 33 vessels per year since 2016, the subchapter I population is expected to remain stable, because it historically has done so.

Rather than a single fee category for all towing vessels covered by a subchapter, the Coast Guard is proposing two categories for subchapter M and three categories for subchapter I vessels. For subchapter M, the inspection types are the Coast Guard option and the TSMS option. For subchapter I, the inspection types are the Coast Guard option, the ACP option, and the SIP option. Table 5 presents the total population of inspected towing vessels that would be impacted by this proposed rule. These are the current rates of inspection for the subchapters, though not all vessels are currently inspected. Table 6 presents the projected subchapter M population and their projected counts of inspection type. We assume that the subchapter M towing vessel population will maintain a 70-percent-TSMS option and 30-percent-Coast-Guard option split over the duration of the analysis.

TABLE 5—TOTAL AFFECTED POPULATION FOR INSPECTED TOWING VESSELS

User fee categories				Population
Subchapter M	Coast Guard option	TSMS		Total
Population	1,603	3,740		5,343
% of Population	30	70		100
Subchapter I	Coast Guard option	Vessel Inspection Alternative		Total
		Alternate Compliance Program (ACP)	Streamlined Inspection Program (SIP)	
Population	28	13	1	42
% of Population	67	31	2	100
Total Population				5,385

TABLE 6—PROJECTED SUBCHAPTER M POPULATION BY INSPECTION OPTION

Estimated annual subchapter M population by inspection type		
Year	CG option	TSMS option
Year 1	1,603	3,740
Year 2	1,592	3,718
Year 3	1,583	3,694
Year 4	1,574	3,670
Year 5	1,563	3,648
Year 6	1,554	3,624
Year 7	1,543	3,602
Year 8	1,534	3,578
Year 9	1,524	3,555
Year 10	1,514	3,532

Costs and Benefits

This proposed rule would not impose any new societal costs as all of the inspection activities are currently being done by the regulated entities and Coast Guard. Rather the impacts of this rule would be in the form of transfer payments, which are monetary payments from one group to another that do not affect total resources available to society.

This rule would not provide any quantitative benefits. However, it would have a qualitative benefit. This rule would revise user fees to more closely reflect the actual cost to the Coast Guard of providing inspection services. The result would be a more fair distribution of costs to inspected towing vessels by inspection type. Title 46 U.S.C. 2110 directs that the fee or charge be established in accordance with 31 U.S.C. 9701, which specifies that each charge be fair and based on: The costs to the Government; the value of the service or thing to the recipient, public policy, or interest served; and other relevant facts. Consistent with these objectives, once a fee or charge is established, section 2110 allows it to be adjusted to accommodate changes in the cost of providing a specific service or thing of value. This rulemaking aids the Coast Guard in compliance with those statutory requirements.

Transfer Payments

The Coast Guard proposes to adjust the user fees collected from the current entities so that there are now five different fees based on the towing vessel subchapter and program utilized for vessel certification. The Coast Guard estimates this total is approximately 5,385 towing vessels. Table 7 shows the current fee, the proposed fee, the change and the percent change to the user fee. The annual costs of services for each vessel class is the proposed user fee for that vessel class.

TABLE 7—CURRENT SUBCHAPTER M AND I USER FEES AND PROPOSED USER FEE ADJUSTMENT AMOUNTS

Fee type/ user fee class	Current fee	Proposed fee	Incremental fee adjustment	Percent change
Subchapter M: Coast Guard option	$1,030	$2,184	$1,154	112
Subchapter M: TSMS	1,030	973	−57	−6
Subchapter I: Coast Guard option	2,915	2,747	−168	−6
Subchapter I: Alternative Compliance Program option	2,915	1,850	−1,065	−37
Subchapter I: Streamlined Inspection Program option	2,915	2,260	−655	−22

Note: Since there are no distinct categories for TSMS, SIP, or ACP in the current user fee table, all of subchapter M vessels pay one fee and all of subchapter I vessels pay one fee. Totals may not sum due to rounding.

In table 8, we show the total annual transfer payments from each vessel class to the Government and the total for all vessels. For example, Subchapter M vessels that choose the Coast Guard option would pay $1,154 additional dollars per vessel in user fees to the Coast Guard for their inspection services. Negative numbers represent a decrease in user fees. Transfer payments are monetary payments from one group to another that do not affect total resources. For this proposed rulemaking, a user fee is a transfer payment from the vessel owner or operator to the Government to offset the costs to the Coast Guard for providing COI services. This is found by multiplying the vessel population by the incremental fee change. Because the subchapter M vessel population is projected to decrease, table 9 shows annual transfer payments for this subchapter, totals are found by multiplying the populations in table 6 by the appropriate fees.

TABLE 8—ANNUAL INCREMENTAL FEE AMOUNTS—FY 2021

Fee type/ user fee class	Estimated population	Incremental fee change	First year fee transfer payments
Subchapter M: Coast Guard option	1,603	$1,154	$1,849,862
Subchapter M: TSMS option	3,740	−57	−213,180
Subtotal	5,343		1,636,682
Subchapter I: Coast Guard option	28	−168	−4,704
Subchapter I: ACP option	13	−1,065	−13,845
Subchapter I: SIP option	1	−655	−655
Subtotal	42		−19,204
Annual Total			1,617,478

TABLE 9—SUBCHAPTER M ANNUAL TRANSFER PAYMENTS

Year	CG option	TSMS option	Subchapter M total
Year 1	$1,849,862	($213,180)	$1,636,682
Year 2	1,837,168	(211,926)	1,625,242
Year 3	1,826,782	(210,558)	1,616,224
Year 4	1,816,396	(209,190)	1,607,206
Year 5	1,803,702	(207,936)	1,595,766
Year 6	1,793,316	(206,568)	1,586,748

TABLE 9—SUBCHAPTER M ANNUAL TRANSFER PAYMENTS—Continued

Year	CG option	TSMS option	Subchapter M total
Year 7	1,780,622	(205,314)	1,575,308
Year 8	1,770,236	(203,946)	1,566,290
Year 9	1,758,696	(202,635)	1,556,061
Year 10	1,747,156	(201,324)	1,545,832

With the reduction in fees to vessels under the subchapter I and subchapter M TSMS options, the first year transfers from the government to the towing vessel industry is $232,384. The Coast Guard expects to have transfers from towing vessel operators for the COI services of $1,636,682 in the first year to the Government. The sum of these transfers is $1,617,478 in the first year. The 10-year transfers, undiscounted, total $15,719,319. The discounted annualized figure, at 7 percent, is $1,577,491. Table 10 summarizes the total 10-year transfer payments from the towing vessel industry to the Government.

TABLE 10—DISCOUNTED TRANSFER PAYMENTS FROM TOWING VESSEL OPERATORS TO THE GOVERNMENT *

Year	Undiscounted	Discounted	
		7%	3%
1	$1,617,478	$1,511,662	$1,570,367
2	1,606,038	1,402,776	1,513,845
3	1,597,020	1,303,644	1,461,500
4	1,588,002	1,211,479	1,410,919
5	1,576,562	1,124,067	1,359,956
6	1,567,544	1,044,521	1,312,793
7	1,556,104	969,063	1,265,255
8	1,547,086	900,418	1,221,284
9	1,536,857	835,948	1,177,873
10	1,526,628	776,060	1,135,955
Total	15,719,319	11,079,638	13,429,747
Annualized	.....	1,577,491	1,574,376

* **Note:** Totals may not sum due to rounding.

Regulatory Alternatives

A discussion of regulatory alternatives is available in the section VI.B(6) of this preamble.

B. Small Entities

In accordance with the Regulatory Flexibility Act (5 U.S.C. 601 *et seq.*) (RFA), the Coast Guard prepared this Initial Regulatory Flexibility Analysis (IRFA) that examines the impacts of the proposed rule on small entities. Due to the anticipated impacts on small businesses, the Coast Guard is including an analysis of the NPRM requirements for informational purposes.

A small entity may be a small independent business, defined as independently owned and operated, that is organized for profit and is not dominant in its field per the Small Business Act (5 U.S.C. 632). A small entity can also be a small not-for-profit organization (any not-for-profit enterprise that is independently owned and operated and is not dominant in its field) or a small governmental jurisdiction (a locality with fewer than 50,000 people) per the RFA. An IRFA addresses the following:

(1) A description of the reasons why action by the agency is being considered;

(2) A succinct statement of the objectives of, and legal basis for, the rule;

(3) A description of and, where feasible, an estimate of the number of small entities to which the rule will apply;

(4) A description of the projected reporting, recordkeeping and other compliance requirements of the rule, including an estimate of the classes of small entities that will be subject to the requirement and the type of professional skills necessary for preparation of the report or record;

(5) An identification, to the extent practicable, of all relevant Federal rules that may duplicate, overlap or conflict with the rule; and

(6) A description of any significant alternatives to the rule that accomplish the stated objectives of applicable statutes and that minimize any significant economic impact of the rule on small entities.[20]

[20] 5 U.S.C. 603.

Below is a discussion of the IRFA analysis for each of these six elements.

1. A description of the reasons why action by the agency is being considered.

The Coast Guard is considering updating the user fees for inspected towing vessels because after reviewing the costs to the Government of inspections under the Coast Guard option or options using a third party, the Coast Guard has determined that updates are necessary to ensure that fees for all options are fair and based on costs to the Government. User fees for subchapter I inspected towing vessels have not been updated since 1995. The proposed changes are also consistent with the Coast Guard's statement in the 2016 final rule, *Inspection of Towing Vessels,* that we planned to promulgate a separate rulemaking for annual inspection fees for towing vessels that would reflect the specific program costs associated with the two subchapter M options—the TSMS option and the Coast Guard inspection option.

The purpose of this proposed rule is to redistribute the burden of inspection

activities from the Coast Guard to the towing vessel industry.

2. A succinct statement of the objective of, and legal basis for, the rule.

This proposed regulatory action is necessary to adjust the user fee schedule to better reflect the cost of COI services to the government, for subchapters I and M towing vessels. The Coast Guard is issuing this proposed rule based on authority in 46 U.S.C. 2110, which has been delegated to the Commandant under DHS Delegation No. 0170.1(II)(92). Title 46 U.S.C. 2110 directs the Coast Guard to establish a fee, or charge, for a service or thing of value it provides in accordance with 31 U.S.C. 9701. Inspections and related services described in Subtitle II of Title 46 United States Code are considered a service of value provided by the Coast Guard. Section 31 U.S.C. 9701 specifies that each fee or charge be fair and based on the costs to the government, the value of the service to the recipient, public policy or interest served, and other relevant facts. Once a fee or charge is established, 46 U.S.C. 2110 allows it to be adjusted to accommodate changes in the cost of providing a specific service or thing of value.

In addition, section 815 of CGAA directs the Coast Guard to review and revise the fee for inspections if necessary to comply with 31 U.S.C. 9701. The Coast Guard interprets ''costs to the Government'' in section 815(a) to mean the cost to the Coast Guard of providing inspection and related services to determine whether a vessel meets requirements necessary for it to maintain its COI.

3. A description of and, where feasible, an estimate of the number of small entities to which the rule will apply.

The proposed rule would affect the owners and operators of certain towing vessels under subchapters I and M. We constructed this towing vessel population from the Coast Guard's MISLE system. From this database, we identified 5,385 vessels affected by this proposed rule—5,343 subchapter M towing vessels and 42 subchapter I towing vessels. There are 1,236 unique companies that own or operate these vessels. Five companies own vessels under both subchapters I and M.

We used available operator name and address information to research public and proprietary databases for entity type (subsidiary or parent company), primary line of business, employee size, revenue, and other information.[21] We found vessels owned by 21 government entities and 4 non-profit entities. The remaining 1,211 are business entities. For governmental jurisdictions, we determined whether the jurisdiction had populations of less than 50,000 as per the criteria in the RFA. For nonprofits, we evaluated whether the nonprofit was independently owned and operated and was not dominant in its field.[22] For the business entities, we matched their information with the latest Small Business Administration (SBA) *Table of Small Business Size Standards* to determine if a business entity is small in its primary line of business as classified in the North American Industry Classification System (NAICS).[23]

We broke the population down into subchapters I and M. For subchapter M, we randomly selected a sample size from the 1,222 unique towing vessel companies to reach the 95 percent confidence level. Using Cochran's Formula, Coast Guard chose a statistically valid random sample of 385 businesses that own and operate towing vessels.[24]

There are a total of 97 NAICS-coded industries in this proposed rule's sample affected population. Table 11 displays the 10 industries that appear most frequently in the affected population of owners or operators of towing vessels in subchapters I and M.

TABLE 11—MOST COMMON NAICS CODES

NAICS code	Description	Small entity definition	Count of towing vessel owners or operators	Percent of total *
488330	Navigational Services to Shipping	<$41,500,000	40	10
713930	Marinas	<$8,000,000	34	9
237990	Other Heavy and Civil Engineering Construction	<$39,500,000	31	8
238910	Site Preparation Contractors	<$16,500,000	31	8
441222	Boat Dealers	<$35,000,000	28	7
483211	Inland Water Freight Transportation	<750 Employees	23	6
488320	Marine Cargo Handling	<$41,500,000	12	3
336611	Ship Building and Repairing	<1,250 Employees.	10	3
488210	Support Activities for Rail Transportation	<$16,500,000	5	1
483212	Inland Water Passenger Transportation	<500 Employees	5	1

* **Note:** Total does not sum to 100 percent, since these percentages reflect only the top 10 most common NAICS codes of the sample. The remaining 44 percent of NAICS codes were not within the 10 most commonly occurring.

Coast Guard chose a subchapter M sample of 385 businesses that own and operate the towing vessels. Of the 385 businesses, 37 exceeded the SBA small business size standards, 265 companies were considered to be small businesses by the SBA size standards, and 83 companies had no information available. Consistent with DHS practice, entities with no information available will be considered as small entities. Thus, there are 348 businesses in our sample that we consider to be small entities. Based on our random sample, 90.4 percent of subchapter M entities are considered small and therefore when applied to the population of unique towing vessel companies, 1,105 subchapter M entities would be considered small.

For subchapter I, we searched all 14 unique towing vessel companies in the available databases. Of the 14 unique towing vessel companies in the

[21] *https://www.cortera.com/ and https://www.manta.com/.*

[22] *https://www.guidestar.org.*

[23] *https://www.sba.gov/document/support--table-size-standards.*

[24] A statistically valid random sample size of 292 businesses would be required to achieve a 95-percent confidence level out of the 1,222 unique towing vessel companies. In this analysis, Coast Guard oversampled to analyze 385 businesses to ensure enough data and information was available on the businesses to meet the sampling requirements.

subchapter I population, 13 had available revenue and employee data. Of these 13 unique towing vessel companies, 6 exceeded the SBA small business size standards and 7 were considered small businesses by the SBA size standards. Consistent with DHS practice, we consider entities for which information was not available to be small. Thus, there are eight businesses in our population that we consider to be small entities.

For this analysis, we considered the annual weighted average transfer from industry to the Coast Guard by subchapter. For subchapter M vessels, we found the average fleet size for small entities is two vessels and multiplied it by the weighted average of incremental changes in user fees. According to our analysis of small subchapter M vessels, 97 percent of them choose the Coast Guard option for their inspection option and 3 percent choose the TSMS option. Thus, we multiplied the rates for vessels choosing their inspection option by the incremental change in user fees and the average fleet size for small subchapter M entities, which yielded an average impact of $1,117 per subchapter M vessel and $2,234 per small subchapter M entity. We repeated this process for subchapter I entities. We found the average fleet size for small entities, which is 1, and multiplied it by the weighted average of incremental changes in user fees. According to our analysis of small subchapter I vessels, 50 percent of them choose the ACP option for their inspection option, 37.5 percent choose the Coast Guard option, and the remaining 12.5 percent choose the SIP option. This proposed rule would save subchapter I entities an average of $799. Tables 12 and 13 show the impact on small company revenue for each subchapter that we had revenue data for.

TABLE 12—SUBCHAPTER M ESTIMATED ANNUAL REVENUE IMPACT

Revenue impact range	Number of entities	Percent of entities
0% ≤ 1%	233	87.9
1% ≤ 3%	27	10.2
3% ≤ 5%	3	1.1
Above 5%	2	0.8
Total	265	100

TABLE 13—SUBCHAPTER I ESTIMATED ANNUAL REVENUE IMPACT

Revenue impact range	Number of entities	Percent of entities
0% ≤ 1%	7	100
1% ≤ 3%	0	0
3% ≤ 5%	0	0
5% ≤ 10%	0	0
Above 10%	0	0
Total	7	100

According to our analysis, 87.9 percent of subchapter M entities will have an annual impact to revenue of 1 percent or less. Approximately, 10.2 percent will have an annual impact to revenue between 1 and 3 percent. The remaining 1.9 percent will have an annual impact to revenue greater than 3 percent. For subchapter I entities, our analysis shows a less than 1 percent impact to annual revenue for all small entities.

4. A description of the projected reporting, recordkeeping, and other compliance requirements of the rule, including an estimate of the classes of small entities which will be subject to the requirements and the type of professional skills necessary for preparation of the report or record.

This proposed rule calls for no new reporting, recordkeeping or other compliance requirements.

5. An identification, to the extent practicable, of all relevant Federal rules which may duplicate, overlap or conflict with the rule.

There are no relevant Federal rules that may duplicate, overlap, or conflict with this proposed rule.

6. A description of any significant alternatives to the rule which accomplish the stated objectives of applicable statutes and which minimize any significant economic impact of the rule on small entities.

Alternatives considered include adjusting our current user fees for inflation, updating only the Coast Guard option user fees or continuing with the current user fees. Each of these options will be considered in the following discussion.

Under the first alternative, Coast Guard considered to adjust the current user fees for inflation from 1995 dollars to 2020 dollars. To adjust for inflation, we use an inflation factor from the annual GDP deflator data. We calculate the inflation factor of 1.58 by dividing the annual 2020 index number (113.623) by the annual 1995 index number (71.864). We then multiply the current fees for subchapters I and M by the inflation factor and round it to the nearest dollar. Subchapters I and M would experience a 58-percent increase in fees and incur annual fees of $597 and $1,691, respectively. The fees, when multiplied by the number of annual COI renewals, yield an annual revenue of approximately $8.9 million and transfer payments of $3.2 million. We rejected this alternative because the annual revenue collected under this methodology does not reflect the full cost to the Coast Guard of providing the COI-related services. Table 14 shows the inflation adjusted user fees for subchapter I and M vessels.

TABLE 14—COMPARISON OF USER FEES IN 1995 DOLLARS AND 2020 DOLLARS

[Alternative 1] *

Fee category	1995 $ (current fee)	Inflation factor	2020 $	Population	Incremental fee adjustment	Annual fee transfer payments	Annual revenue collected from user fees
Subchapter I vessels ...	$2,915	1.58	$4,606	42	$1,691	$71,009	$193,439
Subchapter M vessels	1,030	1.58	1,627	5,343	597	3,191,908	8,695,198
Total	.....	.....	.....	.....	.....	3,262,918	8,888,638

* **Note:** All dollar figures rounded to the closest whole dollar.

In our second alternative, we considered updating only the Coast Guard option user fees. We rejected this alternative because it would not comply with section 815 of CGAA. That section directs the Coast Guard to review and, based on our findings, revise the fee for towing vessel inspections. First, the Coast Guard must compare the costs to the Government of towing vessel inspections performed by the Coast Guard and towing vessel inspections performed by a third party, to determine if they are different. We have conducted that comparison and determined that there is a difference in costs to the Government between the inspection options for towing vessels that involve a third party and those that do not. If there is a difference in costs, section 815 of CGAA directs us to revise the fees we assess for towing vessel inspections to conform to 31 U.S.C. 9701, and to base the fee on the cost to the Government.

In our third alternative, we considered maintaining the current user fee without an adjustment. We rejected this alternative because the annual revenue collected under this methodology would not cover the full cost to the Coast Guard of providing the COI-related services.

Conclusion

In conclusion, we estimate that 87.9 percent of subchapter M entities with revenue data will have an annual impact to revenue of 1 percent or less. Approximately, 10.2 percent will have an annual impact to revenue between 1 and 3 percent. The remaining 1.9 percent will have an annual impact to revenue greater than 3 percent. For subchapter I entities, our analysis shows a less than 1 percent impact to annual revenue for all small entities that had revenue data. We also discussed several regulatory alternatives including our preferred alternative. Our preferred alternative is to: (1) Update the user fee for seagoing towing vessels; (2) revise the user fee for other inspected towing vessels; and (3) establish fees for towing vessels using the ACP, SIP, or the TSMS options. Vessels using the ACP, SIP or TSMS option would pay a lower fee than vessels that use the traditional Coast Guard inspection option.

We are interested in the potential impacts from this rule on small entities and we request public comment on these potential impacts. If you think that this rule will have a significant economic impact on you, your business, or your organization, please submit a comment to the docket at the address under **ADDRESSES** in the rule. In your comment, explain why, how, and to what degree you think this rule will have an economic impact on you.

C. Assistance for Small Entities

Under section 213(a) of the Small Business Regulatory Enforcement Fairness Act of 1996, Public Law 104–121, we want to assist small entities in understanding this proposed rule so that they can better evaluate its effects on them and participate in the rulemaking. If the proposed rule would affect your small business, organization, or governmental jurisdiction and you have questions concerning its provisions or options for compliance, please contact the person in the **FOR FURTHER INFORMATION CONTACT** section of this proposed rule. The Coast Guard will not retaliate against small entities that question or complain about this proposed rule or any policy or action of the Coast Guard.

Small businesses may send comments on the actions of Federal employees who enforce, or otherwise determine compliance with, Federal regulations to the Small Business and Agriculture Regulatory Enforcement Ombudsman and the Regional Small Business Regulatory Fairness Boards. The Ombudsman evaluates these actions annually and rates each agency's responsiveness to small business. If you wish to comment on actions by employees of the Coast Guard, call 1–888–REG–FAIR (1–888–734–3247).

D. Collection of Information

This proposed rule would call for no new collection of information under the Paperwork Reduction Act of 1995, 44 U.S.C. 3501–3520.

The Coast Guard has a collection of information for the collection of user fees from inspected vessels. This collection is 1625–0074 titled ''Direct User Fees for Inspection or Examination of U.S. and Foreign Commercial Vessels.'' The collection of information hour burden for collecting user fees is independent of the amount collected. Towing vessels inspected under 46 CFR subchapters I and M must currently pay $1,030 and $2,915 respectively. This proposed rulemaking would simply adjust the user fee amount to more accurately reflect the current cost of the Coast Guard for performing inspections—and would not change the number of towing vessels that must pay a user fee or the time it takes to pay the user fee.

E. Federalism

A rule has implications for federalism under Executive Order 13132 (Federalism) if it has a substantial direct effect on States, on the relationship between the national government and the States, or on the distribution of power and responsibilities among the various levels of government. We have analyzed this proposed rule under Executive Order 13132 and have determined that it is consistent with the fundamental federalism principles and preemption requirements described in Executive Order 13132. Our analysis follows.

This NPRM proposes to establish and revise user fees for services provided by the Coast Guard pursuant to the Congressional mandate contained in 46 U.S.C. 2110. Congress has not granted the authority to the States to establish user fees for Coast Guard-provided services. This NPRM would not impact a State's general ability to render services or assess or collect fees for State-rendered services. Therefore, this

rule does not have federalism implications as described in Executive Order 13132.

While it is well settled that States may not regulate in categories in which Congress intended the Coast Guard to be the sole source of a vessel's obligations, the Coast Guard recognizes the key role that State and local governments may have in making regulatory determinations. Additionally, for rules with federalism implications and preemptive effect, Executive Order 13132 specifically directs agencies to consult with State and local governments during the rulemaking process. If you believe this proposed rule would have implications for federalism under Executive Order 13132, please contact the person listed in the **FOR FURTHER INFORMATION CONTACT** section of this preamble.

F. Unfunded Mandates Reform Act

The Unfunded Mandates Reform Act of 1995, 2 U.S.C. 1531–1538, requires Federal agencies to assess the effects of their discretionary regulatory actions. In particular, the Act addresses actions that may result in the expenditure by a State, local, or tribal government, in the aggregate, or by the private sector of $100 million (adjusted for inflation) or more in any one year. Although this proposed rule would not result in such an expenditure, we do discuss the effects of this proposed rule elsewhere in this preamble.

G. Taking of Private Property

This proposed rule would not cause a taking of private property or otherwise have taking implications under Executive Order 12630 (Governmental Actions and Interference with Constitutionally Protected Property Rights).

H. Civil Justice Reform

This proposed rule meets applicable standards in sections 3(a) and 3(b)(2) of Executive Order 12988 (Civil Justice Reform) to minimize litigation, eliminate ambiguity, and reduce burden.

I. Protection of Children

We have analyzed this proposed rule under Executive Order 13045 (Protection of Children from Environmental Health Risks and Safety Risks). This proposed rule is not an economically significant rule and would not create an environmental risk to health or risk to safety that might disproportionately affect children.

J. Indian Tribal Governments

This proposed rule does not have tribal implications under Executive Order 13175 (Consultation and Coordination with Indian Tribal Governments), because it would not have a substantial direct effect on one or more Indian tribes, on the relationship between the Federal Government and Indian tribes, or on the distribution of power and responsibilities between the Federal Government and Indian tribes.

K. Energy Effects

We have analyzed this proposed rule under Executive Order 13211 (Actions Concerning Regulations That Significantly Affect Energy Supply, Distribution, or Use). We have determined that it is not a ''significant energy action'' under Executive Order 13211, because although it is a ''significant regulatory action'' under Executive Order 12866, it is not likely to have a significant adverse effect on the supply, distribution, or use of energy, and the Administrator of OMB's Office of Information and Regulatory Affairs has not designated it as a significant energy action.

L. Technical Standards

The National Technology Transfer and Advancement Act, codified as a note to 15 U.S.C. 272, directs agencies to use voluntary consensus standards in their regulatory activities unless the agency provides Congress, through OMB, with an explanation of why using these standards would be inconsistent with applicable law or otherwise impractical. Voluntary consensus standards are technical standards (for example, specifications of materials, performance, design, or operation; test methods; sampling procedures; and related management systems practices) that are developed or adopted by voluntary consensus standards bodies.

This proposed rule does not use technical standards. Therefore, we did not consider the use of voluntary consensus standards.

M. Environment

We have analyzed this proposed rule under Department of Homeland Security Management Directive 023–01, Rev. 1, associated implementing instructions, and Environmental Planning COMDTINST 5090.1 (series), which guide the Coast Guard in complying with the National Environmental Policy Act of 1969 (42 U.S.C. 4321–4370f), and have made a preliminary determination that this action is one of a category of actions that do not individually or cumulatively have a significant effect on the human environment. A preliminary Record of Environmental Consideration supporting this determination is available in the docket. For instructions on locating the docket, see the **ADDRESSES** section of this preamble. This proposed rule would be categorically excluded under paragraphs L54 and L57 of Appendix A, Table 1 of DHS Instruction Manual 023–01, Rev. 1.[25] Paragraph L54 pertains to regulations which are editorial or procedural. Paragraph L57 pertains to regulations concerning manning, documentation, admeasurement, inspection, and equipping of vessels.

This proposed rule would update the existing user fee for seagoing towing vessels that are 300 gross tons or more and establish specific user fees for other towing vessels that have more recently become subject to inspection. We seek any comments or information that may lead to the discovery of a significant environmental impact from this proposed rule.

List of Subjects in 46 CFR Part 2

Marine safety, Reporting and recordkeeping requirements, Vessels.

For the reasons discussed in the preamble, the Coast Guard proposes to amend 46 CFR part 2 as follows:

PART 2—VESSEL INSPECTIONS

■ 1. The authority citation for part 2 is revised to read as follows:

Authority: Sec. 622, Pub. L. 111–281; 33 U.S.C. 1903; 43 U.S.C. 1333; 46 U.S.C. 2103, 2110, 3306, 3316, 3703, 70034; Department of Homeland Security Delegation No. 0170.1(II)(77), (90), (92)(a), (92)(b); E.O. 12234, 45 FR 58801, 3 CFR, 1980 Comp., p. 277, sec. 1–105.

■ 2. Amend § 2.10–25 by:

■ a. Revising the definition of ''*Seagoing towing vessel*''; and

■ b. Adding the definitions in alphabetical order for ''*Alternative Compliance Program option*'', ''*Annual vessel inspection fee*'', ''*Coast Guard option*'', ''*Streamlined Inspection Program option*'', ''*Towing Safety Management System option*'', and ''*Towing vessel*''.

The additions and revision read as follows:

§ 2.10–25 Definitions.

* * * * *

Alternative Compliance Program option means the option described in 46 CFR part 8, subpart D.

[25] *https://www.dhs.gov/sites/default/files/publications/DHS_Instruction%20Manual%20023-01-001-01%20Rev%2001_508%20Admin%20Rev.pdf.*

Annual vessel inspection fee means the fee charged for inspection and related services provided by the Coast Guard to determine whether a vessel meets the requirements to maintain its Certificate of Inspection.

Coast Guard option means an option used by—

(1) A vessel inspected under a 46 CFR subchapter that is not participating in the Alternative Compliance Program described in 46 CFR part 8, subpart D;

(2) A vessel inspected under a 46 CFR subchapter that is not participating in the Streamlined Inspection Program described in 46 CFR part 8, subpart E; or

(3) A vessel inspected under 46 CFR subchapter M that is not participating in the Towing Safety Management System option described in 46 CFR part 138.

* * * * *

Seagoing towing vessel means a commercial vessel 300 gross tons or more engaged in or intending to engage in the service of pulling, pushing or hauling alongside, or any combination of pulling, pushing or hauling alongside, and that makes voyages beyond the Boundary Line as defined by 46 U.S.C. 103, and has been issued a Certificate of Inspection under the provisions of subchapter I of this chapter.

* * * * *

Streamlined Inspection Program option means the option described in 46 CFR part 8, subpart E.

* * * * *

Towing Safety Management System option means the option described in 46 CFR part 138 for towing vessels subject to 46 CFR subchapter M.

Towing vessel means a commercial vessel engaged in or intending to engage in the service of pulling, pushing, or hauling alongside, or any combination of pulling, pushing, or hauling alongside.

* * * * *

■ 3. Amend § 2.10–101, in Table 2.10–101, by:

■ a. Revising the ''Sea-going Towing Vessels'' entry; and

■ b. Adding an entry for ''Towing Vessels (Inspected under 46 CFR Subchapter M)''.

The addition and revision read as follows:

§ 2.10–101 Annual vessel inspection fee.

* * * * *

TABLE 2.10–101—ANNUAL VESSEL INSPECTION FEES FOR U.S. AND FOREIGN VESSELS REQUIRING A CERTIFICATE OF INSPECTION

* * * * * * *	
Seagoing Towing Vessels (Inspected under 46 CFR Subchapter I):	
Coast Guard option	$2,747
Alternative Compliance Program option	1,850
Streamlined Inspection Program option	2,260
* * * * * * *	
Towing Vessels (Inspected under 46 CFR Subchapter M):	
Coast Guard option	2,184
Towing Safety Management System option	973

* * * * *

Dated: December 23, 2021.

Karl L. Schultz,

Admiral, U.S. Coast Guard, Commandant.

[FR Doc. 2022–00200 Filed 1–10–22; 8:45 am]

BILLING CODE 9110–04–P

DEPARTMENT OF THE INTERIOR

Fish and Wildlife Service

50 CFR Part 17

[Docket No. FWS–R4–ES–2020–0109; FF09E22000 FXES11130900000 223]

RIN 1018–BC98

Endangered and Threatened Wildlife and Plants; Removal of 23 Extinct Species From the Lists of Endangered and Threatened Wildlife and Plants; Ivory-Billed Woodpecker

AGENCY: Fish and Wildlife Service, Interior.

ACTION: Proposed rule; reopening of comment period and announcement of public hearing.

SUMMARY: We, the U.S. Fish and Wildlife Service (Service), are reopening the public comment period on our September 30, 2021, proposal to remove the ivory-billed woodpecker from the Federal Lists of Endangered and Threatened Wildlife and Plants (List) due to extinction. We are taking this action to conduct a public hearing on the proposal to remove the ivory-billed woodpecker from the List and to allow all interested parties additional time to comment on the proposed rule to delist the ivory-billed woodpecker (docket number: FWS–R4–ES–2020–0109). Comments previously submitted need not be resubmitted and will be fully considered in preparation of the final rule. This comment period reopening is only for the ivory-billed woodpecker proposed delisting; we are not taking any comments in regard to the other 22 species proposed in the same rule, for which the comment periods closed on November 29, 2021.

DATES:

Written comments: The comment period on the proposed rule that published September 30, 2021 (86 FR 54298), is reopened only for the ivory-billed woodpecker proposed delisting. We will accept comments on the ivory-billed woodpecker proposed delisting that are received or postmarked on or before February 10, 2022. Please note that comments submitted electronically using the Federal eRulemaking Portal (see **ADDRESSES**, below) must be received by 11:59 p.m. Eastern Time on the closing date, and comments submitted by U.S. mail must be postmarked by that date, to ensure consideration.

Public hearing: On January 26, 2021, we will hold a public hearing on the ivory-billed woodpecker proposed delisting from 6:00 to 7:30 p.m., Central Time, using the Zoom platform (for more information, see Public Hearing, below).

ADDRESSES:

Availability of documents: You may obtain copies of the September 30, 2021, proposed rule and associated documents on the internet at *https://www.regulations.gov* under Docket No. FWS–R4–ES–2020–0109.

Written comments: You may submit written comments by one of the following methods:

(1) *Electronically:* Go to the Federal eRulemaking Portal: *https://www.regulations.gov.* In the Search box, enter the RIN or docket number, which

are displayed in the initial headings of this document. For best results, do not copy and paste the RIN or docket number; instead, type the RIN or docket number into the Search box using hyphens. Then, click on the Search button. On the resulting page, in the Search panel on the left side of the screen, under the Document Type heading, click on the Proposed Rule box to locate this document. You may submit a comment by clicking on ''Comment.'' Please ensure you have located the correct document before submitting your comments.

(2) *By hard copy:* Submit by U.S. mail to: Public Comments Processing, Attn: FWS–R4–ES–2020–0109, U.S. Fish and Wildlife Service, MS: PRB/3W, 5275 Leesburg Pike, Falls Church, VA 22041–3803.

We request that you send comments only by the methods described above. We will post all comments on *https://www.regulations.gov.* This generally means that we will post any personal information you provide us (see Public Comments, below, for more information).

Public hearing: The public hearing will be held virtually using the Zoom platform. See Public Hearing, below, for more information.

FOR FURTHER INFORMATION CONTACT: Elizabeth Maclin, Branch of Delisting and Foreign Species, Ecological Services Program, U.S. Fish and Wildlife Service, 5275 Leesburg Pike, MS: ES, Falls Church, VA 22041; telephone 703–358–2646. If you use a telecommunications device for the deaf, call the Federal Relay Service at 800–877–8339.

SUPPLEMENTARY INFORMATION:

Background

On September 30, 2021, we published a proposed rule (86 FR 54298) to remove 23 species from the Federal Lists of Endangered and Threatened Wildlife and Plants due to extinction. The proposed rule opened a 60-day public comment period, ending November 29, 2021. During the open comment period, we received a request for a public hearing on the proposal to remove the ivory-billed woodpecker from the List. Therefore, we are announcing a public hearing and a reopening of the comment period (see **DATES**, above) to allow the public an additional opportunity to provide comments on the proposed rule to delist the ivory-billed woodpecker.

For a description of previous Federal actions concerning the ivory-billed woodpecker and information on the types of comments that would be helpful to us in promulgating this rulemaking action, please refer to the September 30, 2021, proposed rule (86 FR 54298).

Public Hearing

We are holding a public hearing to accept comments on the proposed rule to delist the ivory-billed woodpecker on the date and at the time listed in **DATES**. We are holding the public hearing via the Zoom online video platform and via teleconference so that participants can attend remotely. For security purposes, registration is required. All participants must register in order to listen and view the hearing via Zoom, listen to the hearing by telephone, or provide oral public comments at the hearing by Zoom or telephone. For information on how to register, or if technical problems occur joining Zoom on the day of the hearing, visit *https://www.fws.gov/service-proposes-to-delist-ivory-billed-woodpecker.* Registrants will receive the Zoom link and the telephone number for the public hearing. If applicable, interested members of the public not familiar with the Zoom platform should view the Zoom video tutorials (*https://support.zoom.us/hc/en-us/articles/206618765-Zoom-video-tutorials*) prior to the public hearing.

The public hearing will provide interested parties an opportunity to present verbal testimony (formal, oral comments) regarding the September 30, 2021, proposed rule to remove the ivory-billed woodpecker from the List due to extinction (86 FR 54298). The public hearing will not be an opportunity for dialogue with the Service, but rather a forum for accepting formal verbal testimony. In the event there is a large attendance, the time allotted for oral statements may be limited. Therefore, anyone wishing to make an oral statement at the public hearing for the record is encouraged to provide a prepared written copy of their statement to us through the Federal eRulemaking Portal or U.S. mail (see **ADDRESSES**, above). There are no limits on the length of written comments submitted to us. Anyone wishing to make an oral statement at the public hearing must register before the hearing (*https://www.fws.gov/service-proposes-to-delist-ivory-billed-woodpecker*). The use of a virtual public hearing is consistent with our regulations at 50 CFR 424.16(c)(3).

Reasonable Accommodation

The Service is committed to providing access to the public hearing for all participants. Closed captioning will be available during the public hearing. Further, a full audio and video recording and transcript of the public hearing will be posted online at *https://www.fws.gov/service-proposes-to-delist-ivory-billed-woodpecker* after the hearing. Participants will also have access to live audio during the public hearing via their telephone or computer speakers. Persons with disabilities requiring reasonable accommodations to participate in the meeting and/or hearing should contact the person listed under **FOR FURTHER INFORMATION CONTACT** at least 5 business days prior to the date of the meeting and hearing to help ensure availability. An accessible version of the Service's public informational meeting presentation will also be posted online at *https://www.fws.gov/service-proposes-to-delist-ivory-billed-woodpecker* prior to the meeting and hearing (see **DATES**, above). See *https://www.fws.gov/service-proposes-to-delist-ivory-billed-woodpecker* for more information about reasonable accommodation.

Public Comments

If you submit information via *https://www.regulations.gov,* your entire submission—including your personal identifying information—will be posted on the website. If your submission is made via a hardcopy that includes personal identifying information, you may request at the top of your document that we withhold this information from public review. However, we cannot guarantee that we will be able to do so. We will post all hardcopy submissions on *https://www.regulations.gov.*

Comments and materials we receive, as well as supporting documentation we used in preparing the proposed rule, will be available for public inspection on *https://www.regulations.gov.*

Authors

The primary authors of this document are the staff members of the Branch of Delisting and Foreign Species, Ecological Services Program.

Authority

The authority for this action is the Endangered Species Act of 1973, as amended (16 U.S.C. 1531 *et seq.*).

Martha Williams,

Principal Deputy Director, Exercising the Delegated Authority of the Director, U.S. Fish and Wildlife Service.

[FR Doc. 2022–00322 Filed 1–10–22; 8:45 am]

BILLING CODE 4333–15–P

Notices

Federal Register

Vol. 87, No. 7

Tuesday, January 11, 2022

This section of the FEDERAL REGISTER contains documents other than rules or proposed rules that are applicable to the public. Notices of hearings and investigations, committee meetings, agency decisions and rulings, delegations of authority, filing of petitions and applications and agency statements of organization and functions are examples of documents appearing in this section.

DEPARTMENT OF AGRICULTURE

Performance Review Board Membership

AGENCY: Office of Human Resource Management, Departmental Administration, USDA.

ACTION: Notice of performance review board appointments.

SUMMARY: This notice announces the members of the Senior Executive Service (SES) and Senior Level (SL) and Scientific or Professional (ST) Performance Review Boards (PRBs). Agriculture has two PRBs with representatives from each USDA Mission Area. The PRBs are comprised of a Chairperson and a mix of career and noncareer senior executives and senior professionals that meet annually to review and evaluate performance appraisal documents. The PRB provides a written recommendation to the Secretary for final approval of each executive's performance rating, performance-based pay adjustment, and performance award. The PRBs are advised by the Office of Human Resources Management, Office of the General Counsel, and Office of the Assistant Secretary for Civil Rights to ensure compliance with laws and regulations.

DATES: The board membership is applicable beginning on November 29, 2021.

FOR FURTHER INFORMATION CONTACT: Anita R. Adkins, Acting Chief Human Capital Officer, Office of Human Resources Management, telephone: (337) 247–1820, or Tonique Washington, Acting Chief Learning Officer, telephone: (202) 720–0027.

SUPPLEMENTARY INFORMATION: In accordance with 5 U.S.C. 4314(c)(4), the USDA PRB members are named below:

Bane, Robert; Barhydt, Richard; Bucknall, Janet; Chitnis, Parag; Crockett, John; Eichhorst, John; Green, Mark; Gore, Quvator Renee; Haven, Jackie; Heath, Linda; McHugh, Tara; Packnett, Patrick; Javery, Peggy; Perry, Andrew; Mays, Clyde Frank; Morris, Erin; Powers, Joseph; Staiert, Jim; Smith, Gregory; Taylor, Willie; Tucker, Jennifer; Watson, Michael; Whitley, Daniel; and Williams, Duane.

Anita R. Adkins,

Acting Chief Human Capital Officer, Office of Human Resources Management.

[FR Doc. 2022–00291 Filed 1–10–22; 8:45 am]

BILLING CODE 3410–96–P

DEPARTMENT OF AGRICULTURE

Submission for OMB Review; Comment Request

January 6, 2022.

The Department of Agriculture has submitted the following information collection requirement(s) to OMB for review and clearance under the Paperwork Reduction Act of 1995, Public Law 104–13. Comments are requested regarding; whether the collection of information is necessary for the proper performance of the functions of the agency, including whether the information will have practical utility; the accuracy of the agency's estimate of burden including the validity of the methodology and assumptions used; ways to enhance the quality, utility and clarity of the information to be collected; and ways to minimize the burden of the collection of information on those who are to respond, including through the use of appropriate automated, electronic, mechanical, or other technological collection techniques or other forms of information technology.

Comments regarding this information collection received by February 10, 2022 will be considered. Written comments and recommendations for the proposed information collection should be submitted within 30 days of the publication of this notice on the following website *www.reginfo.gov/public/do/PRAMain.* Find this particular information collection by selecting ''Currently under 30-day Review—Open for Public Comments'' or by using the search function.

An agency may not conduct or sponsor a collection of information unless the collection of information displays a currently valid OMB control number and the agency informs potential persons who are to respond to the collection of information that such persons are not required to respond to the collection of information unless it displays a currently valid OMB control number.

Animal and Plant Health Inspection Service

Title: National Poultry Improvement Plan (NPIP).

OMB Control Number: 0579–0007.

Summary of Collection: The National Poultry Improvement Plan (NPIP) is a voluntary Federal-State-industry program for controlling certain poultry diseases and for improving poultry breeding flocks and products through disease control techniques. It is authorized by the USDA Organic Act of 1944, as amended (7 U.S.C. 429) and the cooperative work is carried out through memoranda of understanding with the participating States. Specific NPIP provisions are contained in Title 9, Parts 56, 145, 146, and 147 of the *Code of Federal Regulations.* The Veterinary Services (VS) unit of USDA's Animal and Plant Health Inspection Service (APHIS) administers these regulations.

Need and Use of the Information: APHIS will collect information using several information collection activities to continually improve the health of the U.S. poultry population and the quality of U.S. poultry products. If the information were collected less frequently or not collected, APHIS could not affectively monitor the health of the nation's poultry population.

Description of Respondents: Business or other for-profit; State, Local or Tribal Government; Individuals or households.

Number of Respondents: 2,867.

Frequency of Responses: Recordkeeping; Reporting: On occasion.

Total Burden Hours: 111,339.

Ruth Brown,

Departmental Information Collection Clearance Officer.

[FR Doc. 2022–00293 Filed 1–10–22; 8:45 am]

BILLING CODE 3410–34–P

AMERICAN BATTLE MONUMENTS COMMISSION

Information Collection: Generic Clearance for the Collection of Qualitative Feedback on Agency Service Delivery

AGENCY: American Battle Monuments Commission (ABMC).

ACTION: Notice of information collection; request for comment.

SUMMARY: In accordance with the Paperwork Reduction Act of 1995, the ABMC is seeking comments from all interested individuals and organizations for a new information collection, Generic Clearance for the Collection of Qualitative Feedback on Agency Service Delivery.

DATES: Comments must be received in writing on or before February 10, 2022 to be assured of consideration. Comments received after that date will be considered to the extent practicable.

ADDRESSES: Written comments and recommendations for the proposed information collection should be sent within 30 days of publication of this notice to *www.reginfo.gov/public/do/PRAMain.* Find this particular information collection by selecting ''Currently under 30-day Review—Open for Public Comments'' or by using the search function.

FOR FURTHER INFORMATION CONTACT: Karen Wurzburger, Director Visitor Services and Interpretation. Telephone: +33 (0)1 40 75 27 78; Email Address: *wurzburgerk@abmc.gov*

SUPPLEMENTARY INFORMATION: *Title:* Generic Clearance for the Collection of Qualitative Feedback on Agency Service Delivery.

Type of Request: New collection.

Abstract: This information collection activity provides a means to garner qualitative customer and stakeholder feedback in an efficient, timely manner, in accordance with the Agency's commitment to improve service delivery. By qualitative feedback we mean information that provides useful insights on perceptions and opinions but are not statistical surveys that yield quantitative results that can be generalized to the population of study.

This feedback will provide insights into customer or stakeholder perceptions, experiences, and expectations, provide an early warning of issues with service, or focus attention on areas where communication, training or changes in operations might improve delivery of products or services. These collections will allow for ongoing, collaborative, and actionable communications between the Agency and its customers and stakeholders. It will also allow feedback to contribute directly to the improvement of program management. The solicitation of feedback will target areas such as: Timeliness, appropriateness, accuracy of information, courtesy, efficiency of service delivery, and resolution of issues with service delivery. Responses will be assessed to plan and inform efforts to improve or maintain the quality of service offered to the public.

If this information is not collected, vital feedback from customers and stakeholders on the Agency's services will be unavailable. The Agency will only submit a collection for approval under this generic clearance if it meets the following conditions:

- The collections are voluntary;
- The collections are low-burden for respondents (based on considerations of total burden hours, total number of respondents, or burden-hours per respondent) and are low-cost for both the respondents and the Federal Government;
- The collections are noncontroversial and do not raise issues of concern to other Federal agencies;
- Any collection is targeted to the solicitation of opinions from respondents who have experience with the program or may have experience with the program in the near future;
- Personally identifiable information (PII) is collected only to the extent necessary and is not retained;
- Information gathered is intended to be used only internally for general service improvement and program management purposes and is not intended for release outside of the agency (if released, the agency must indicate the qualitative nature of the information);
- Information gathered will not be used for the purpose of substantially informing influential policy decisions; and
- Information gathered will yield qualitative information. The collections will not be designed or expected to yield statistically reliable results or used as though the results are generalizable to the population of study. Feedback collected under this generic clearance provides useful information, but it does not yield data that can be generalized to the overall population.

This type of generic clearance for qualitative information will not be used for quantitative information collections that are designed to yield reliably actionable results, such as monitoring trends over time or documenting program performance. Such data uses require more rigorous designs that address: The target population to which generalizations will be made, the sampling frame, the sample design (including stratification and clustering), the precision requirements or power calculations that justify the proposed sample size, the expected response rate, methods for assessing potential nonresponse bias, the protocols for data collection, and any testing procedures that were or will be undertaken prior to fielding the study. Depending on the degree of influence the results are likely to have, such collections may still be eligible for submission for other generic mechanisms that are designed to yield quantitative results.

As a general matter, information collections will not result in any new system of records containing privacy information and will not ask questions of a sensitive nature, such as sexual behavior and attitudes, religious beliefs, and other matters that are commonly considered private.

Type of Respondents: Individuals and Households, Business and Organizations, State, Local or Tribal Government.

Estimate of Burden per Response: 10 minutes.

Estimated Annual Number of Respondents: 15,000.

Estimated Annual Number of Responses per Respondent: 1.

Estimated Total Annual Burden on Respondents: 2,500 total hours per year.

Comment is Invited: Comment is invited on: (1) Whether this collection of information is necessary for the stated purposes and the proper performance of the functions of the Agency, including whether the information will have practical or scientific utility; (2) the accuracy of the Agency's estimate of the burden of the collection of information, including the validity of the methodology and assumptions used; (3) ways to enhance the quality, utility, and clarity of the information to be collected; and (4) ways to minimize the burden of the collection of information on respondents, including the use of automated, electronic, mechanical, or other technological collection

techniques or other forms of information technology.

All comments received in response to this notice, including names and addresses when provided, will be a matter of public record. Comments will be summarized and included in the submission to the Office of Management and Budget for approval.

Robert J. Dalessandro,

Deputy Secretary, ABMC.

[FR Doc. 2022–00285 Filed 1–10–22; 8:45 am]

BILLING CODE P

COMMISSION ON CIVIL RIGHTS

Notice of Public Meetings of the New Mexico Advisory Committee to the U.S. Commission on Civil Rights

AGENCY: U.S. Commission on Civil Rights.

ACTION: Announcement of meetings.

SUMMARY: Notice is hereby given, pursuant to the provisions of the rules and regulations of the U.S. Commission on Civil Rights (Commission) and the Federal Advisory Committee Act that the New Mexico Advisory Committee (Committee) will hold a meeting via videoconference on Tuesday, January 25, 2022, from 12:00 p.m. to 1:00 p.m. Mountain Time for the purpose of selecting the Committee's first project topic.

DATES: The meeting will be held on:

- Tuesday, January 25, 2022, from 12:00 p.m. to 1:00 p.m. MT

Public Registration Link: https://tinyurl.com/2p96f52c.

FOR FURTHER INFORMATION CONTACT: Brooke Peery, Designated Federal Officer (DFO), at *bpeery@usccr.gov* or (202) 701–1376.

SUPPLEMENTARY INFORMATION: Members of the public may listen to the discussion. This meeting is available to the public through the public registration link listed above. An open comment period will be provided to allow members of the public to make a statement as time allows. The conference call operator will ask callers to identify themselves, the organization they are affiliated with (if any), and an email address prior to placing callers into the conference room. Callers can expect to incur regular charges for calls they initiate over wireless lines, according to their wireless plan. The Commission will not refund any incurred charges. Persons with hearing impairments may also follow the proceedings by first calling the Federal Relay Service at 1–800–877–8339 and providing the Service with the conference call number and conference ID number.

Members of the public are also entitled to submit written comments; the comments must be received in the regional office within 30 days following the meeting. Written comments may be mailed to the Regional Programs Unit Office, U.S. Commission on Civil Rights, 300 N Los Angeles St., Suite 2010, Los Angeles, CA 90012 or emailed to Brooke Peery at *bpeery@usccr.gov*.

Records generated from this meeting may be inspected and reproduced at the Regional Programs Unit Office, as they become available, both before and after the meeting. Records of the meeting will be available at: *https://www.facadatabase.gov/FACA/FACAPublicViewCommitteeDetails?id=a10t0000001gzlGAAQ*.

Please click on the ''Meeting Details'' and ''Documents'' links. Persons interested in the work of this Committee are also directed to the Commission's website, *http://www.usccr.gov,* or may contact the Regional Programs Unit office at the above email or street address.

Agenda

I. Welcome & Roll Call
II. Approval of Minutes
III. Discussion
IV. Public Comment
V. Adjournment

Dated: January 6, 2022.

David Mussatt,

Supervisory Chief, Regional Programs Unit.

[FR Doc. 2022–00290 Filed 1–10–22; 8:45 am]

BILLING CODE P

DEPARTMENT OF COMMERCE

Foreign-Trade Zones Board

[B–62–2021]

Foreign-Trade Zone (FTZ) 7—Mayaguez, Puerto Rico, Authorization of Production Activity, Lilly del Caribe, Inc. (Pharmaceutical Products), Carolina, Puerto Rico

On September 8, 2021, Lilly del Caribe, Inc., submitted a notification of proposed production activity to the FTZ Board for its facility within Subzone 7K, in Carolina, Puerto Rico.

The notification was processed in accordance with the regulations of the FTZ Board (15 CFR part 400), including notice in the **Federal Register** inviting public comment (86 FR 51653–51654, September 16, 2021). On January 6, 2022, the applicant was notified of the FTZ Board's decision that no further review of the activity is warranted at this time. The production activity described in the notification was authorized, subject to the FTZ Act and the FTZ Board's regulations, including Section 400.14.

Dated: January 6, 2022.

Andrew McGilvray,

Executive Secretary.

[FR Doc. 2022–00314 Filed 1–10–22; 8:45 am]

BILLING CODE 3510–DS–P

DEPARTMENT OF COMMERCE

Bureau of Industry and Security

Sensors and Instrumentation Technical Advisory Committee; Notice of Open Meeting

The Sensors and Instrumentation Technical Advisory Committee (SITAC) will meet on January 25, 2022, at 1:00 p.m., Eastern Standard Time, via teleconference. The Committee advises the Office of the Assistant Secretary for Export Administration on technical questions that affect the level of export controls applicable to sensors and instrumentation equipment and technology.

Agenda

Public Session

1. Welcome and Introductions.
2. Remarks from the Bureau of Industry and Security Management.
3. Industry Presentations.
4. New Business.

Closed Session

5. Discussion of matters determined to be exempt from the provisions relating to public meetings found in 5 U.S.C. app. §§ 10(a)(1) and 10(a)(3).

The open session will be accessible via teleconference on a first come, first serve basis. To join the conference, submit inquiries to Ms. Yvette Springer at *Yvette.Springer@bis.doc.gov* no later than January 18, 2022.

To the extent that time permits, members of the public may present oral statements to the Committee. The public may submit written statements at any time before or after the meeting. However, to facilitate distribution of public presentation materials to the Committee members, the Committee suggests that the materials be forwarded before the meeting to Ms. Springer.

For more information contact Yvette Springer on (202) 482–2813.

Yvette Springer,

Committee Liaison Officer.

[FR Doc. 2022–00243 Filed 1–10–22; 8:45 am]

BILLING CODE 3510–JT–P

DEPARTMENT OF COMMERCE

International Trade Administration

[A–351–842]

Certain Uncoated Paper From Brazil: Final Results of Antidumping Duty Changed Circumstances Review

AGENCY: Enforcement and Compliance, International Trade Administration, Department of Commerce.

SUMMARY: On November 26, 2021, the Department of Commerce (Commerce) published the initiation and preliminary results of a changed circumstances review (CCR) of the antidumping duty (AD) order on certain uncoated paper (uncoated paper) from Brazil. For these final results, Commerce continues to find that Sylvamo do Brasil Ltda. (SVBR) is the successor-in-interest to International Paper do Brasil Ltda. (IP) and that Sylvamo Exports Ltda. (SVEX) is the successor-in-interest to International Paper Exportadora Ltda. (IPEX). Furthermore, SVBR and SVEX (collectively, Sylvamo) should be assigned the same AD cash deposit rate assigned to IP and IPEX (collectively, International Paper) for purposes of determining AD liability in this proceeding.

DATES: Applicable January 11, 2022.

FOR FURTHER INFORMATION CONTACT: Christopher Maciuba, AD/CVD Operations, Office V, Enforcement and Compliance, International Trade Administration, U.S. Department of Commerce, 1401 Constitution Avenue NW, Washington, DC 20230; telephone: (202) 482–5831.

SUPPLEMENTARY INFORMATION:

Background

On November 26, 2021, Commerce published the *Initiation and Preliminary Results,*[1] finding that Sylvamo is the successor-in-interest to International Paper[2] and should be assigned the same AD cash deposit rate assigned to International Paper in this proceeding.[3] In the *Initiation and Preliminary Results,* we provided all interested parties with an opportunity to comment and request a public hearing regarding our preliminary finding.[4] We received no comments or requests for a public hearing from interested parties.

Scope of the Order[5]

The merchandise covered by the scope of the *Order* is certain uncoated paper. For a complete description of the scope of the *Order, see* the Preliminary Decision Memorandum.

Final Results of the Changed Circumstances Review

For the reasons stated in the *Initiation and Preliminary Results,* and because we received no comments from interested parties to the contrary, Commerce continues to find that Sylvamo is the successor-in-interest to International Paper and should be assigned the same AD cash deposit rate assigned to International Paper in this proceeding. As a result of this determination, we find that Sylvamo should receive the cash deposit rate previously assigned to International Paper in the most recently completed review of the *Order* covering International Paper. The most recent cash deposit rate assigned to International Paper was 20.80 percent *ad valorem.*[6] Consequently, Commerce will instruct U.S. Customs and Border Protection to suspend liquidation of all shipments of subject merchandise exported by Sylvamo and entered, or withdrawn from warehouse, for consumption on or after the publication date of this notice in the **Federal Register** at 20.80 percent *ad valorem.* This cash deposit requirement shall remain in effect until further notice.

Administrative Protective Order

This notice serves as the only reminder to parties subject to administrative protective order (APO) of their responsibility concerning the disposition of proprietary information disclosed under APO in accordance with 19 CFR 351.305(a)(3). Timely written notification of return/destruction of APO materials or conversion to judicial protective order is hereby requested. Failure to comply with the regulations and terms of an APO is a sanctionable violation.

Notification to Interested Parties

We are issuing this determination and publishing these final results and notice in accordance with sections 751(b)(1) and 777(i)(1) and (2) of the Tariff Act of 1930, as amended, and 19 CFR 351.216 and 351.221(c)(3).

Dated: January 4, 2022.

Ryan Majerus,

Deputy Assistant Secretary for Policy and Negotiations, performing the non-exclusive functions and duties of the Assistant Secretary for Enforcement and Compliance.

[FR Doc. 2022–00315 Filed 1–10–22; 8:45 am]

BILLING CODE 3510–DS–P

[1] *See Certain Uncoated Paper from Brazil: Notice of Initiation and Preliminary Results of Antidumping Duty Changed Circumstances Review,* 86 FR 67438 (November 26, 2021) (*Initiation and Preliminary Results*) and accompanying Preliminary Decision Memorandum.

[2] During the underlying less-than-fair-value (LTFV) investigation, Commerce determined that IP and IPEX constituted a single entity for purposes of the AD order. *See Certain Uncoated Paper from Brazil: Final Determination of Sales at Less Than Fair Value,* 81 FR 3115, 3116 (January 20, 2016). In subsequent cases, we have referred to them, collectively, as International Paper. *See, e.g., Certain Uncoated Paper from Brazil: Final Results of Antidumping Duty Administrative Review; 2018–2019,* 86 FR 7254 (January 27, 2021) (*Brazil Paper 2018–2019*). Given that Commerce previously determined that International Paper represented a single entity—and in light of the fact that we find continuity of operations following the corporate structure changes to SVBR/SVEX—we intend to similarly treat Sylvamo as a single entity for cash deposit purposes.

[3] *See Initiation and Preliminary Results,* 86 FR 67438.

[4] *Id.,* 86 FR 67439.

[5] *See Certain Uncoated Paper from Australia, Brazil, Indonesia, the People's Republic of China, and Portugal: Amended Final Affirmative Antidumping Determinations for Brazil and Indonesia and Antidumping Duty Orders,* 81 FR 11174 (March 3, 2016) (*Order*).

[6] *See Brazil Paper 2018–2019,* 86 FR 7254.

DEPARTMENT OF COMMERCE

International Trade Administration

[C–570–054]

Certain Aluminum Foil From the People's Republic of China: Final Results of Countervailing Duty Administrative Review; 2019; Correction

AGENCY: Enforcement and Compliance, International Trade Administration, Department of Commerce.

ACTION: Notice; correction.

SUMMARY: The Department of Commerce (Commerce) published the **Federal Register** notice of the final results of the administrative review of the countervailing duty (CVD) order on certain aluminum foil (aluminum foil) from the People's Republic of China (China) covering the period January 1, 2019, through December 31, 2019, on December 27, 2021. This notice misidentified a cross-owned company and misspelled the names of other companies.

FOR FURTHER INFORMATION CONTACT: Tyler Weinhold, AD/CVD Operations, Office VI, Enforcement and Compliance, International Trade Administration, U.S. Department of Commerce, 1401

Constitution Avenue NW, Washington, DC 20230; telephone: (202) 482–1121.

SUPPLEMENTARY INFORMATION:

Correction

In the **Federal Register** of December 27, 2021, in FR Doc 2021–28043, on page 73250, in the net countervailable subsidy rate table, make the following corrections:

• In the third row of the ''Company'' column, revise the seventh-listed company name, ''Jiangsu Dingsheng New Materials Joint Stock Co., Ltd.'' to ''Jiangsu Dingsheng New Materials Joint-Stock Co., Ltd.'' to include a hyphen between ''Joint'' and ''Stock.''

• In the third row of the ''Company'' column, revise the eighth-listed company name, ''Luoyang Longding Aluminium Industries Co., Ltd.'' to ''Luoyang Longding Aluminum Co., Ltd.'' to change ''Aluminium'' to ''Aluminum'' and to exclude ''Industries.''

• In the eighth row of the ''Company'' column, revise ''Xiamen Xiashun Aluminium Foil Co. Ltd.'' to ''Xiamen Xiashun Aluminum Foil Co., Ltd.'' to change ''Aluminium'' to ''Aluminum.''

• In the ''Company'' and ''Net countervailable subsidy rate (percent *ad valorem*)'' columns, include the following company and associated rate: Luoyang Longding Aluminium Industries Co., Ltd.; 14.20.

Background

On December 27, 2021, Commerce published in the **Federal Register** the final results of the administrative review of the CVD order on aluminum foil from China covering the period January 1, 2019, through December 31, 2019.[1]

In the net countervailable subsidy rate table, Commerce inadvertently listed Luoyang Longding Aluminium Industries Co., Ltd., instead of Luoyang Longding Aluminum Co., Ltd., as one of the cross-owned companies in the third row of the ''Company'' column. Luoyang Longding Aluminium Industries Co., Ltd. should have been listed as a separate company and, instead, Luoyang Longding Aluminum Co., Ltd. should have been included as a cross-owned company in the third row of the ''Company'' column in the net countervailable subsidy rate table.

In addition, ''Jiangsu Dingsheng New Materials Joint-Stock Co., Ltd.'' was misspelled as ''Jiangsu Dingsheng New Materials Joint Stock Co., Ltd.'' (omitting the hyphen between ''Joint'' and ''Stock'') and ''Xiamen Xiashun Aluminum Foil Co., Ltd.'' was misspelled as ''Xiamen Xiashun Aluminium Foil Co. Ltd.'' (misspelling ''Aluminum'' as ''Aluminium'').

The corrected net countervailable subsidy table is as follows:

Company	Net countervailable subsidy rate (percent *ad valorem*)
Alcha International Holdings Limited	14.20
Anhui Maximum Aluminum Industries Company Ltd.; Jiangsu Huafeng Aluminum Industry Co., Ltd.; Jiangsu Zhongji Lamination Materials Co., Ltd.; Jiangsu Zhongji Lamination Materials Co., (HK) Limited; and Shantou Wanshun Package Material Stock Co., Ltd[2]	14.20
Dingsheng Aluminum Industries (Hong Kong) Trading Co., Ltd.; Hangzhou DingCheng Aluminum Co., Ltd.; Hangzhou Dingsheng Import & Export Co. Ltd.; Hangzhou Dingsheng Industrial Group Co. Ltd.; Hangzhou Five Star Aluminum Co., Ltd.; Hangzhou Teemful Aluminum Co., Ltd.; Jiangsu Dingsheng New Materials Joint-Stock Co., Ltd.; Luoyang Longding Aluminum Co., Ltd.; and Walson (HK) Trading Co., Limited[3]	14.20
Hunan Suntown Marketing Limited	14.20
Jiangsu Alcha Aluminum Co., Ltd	305.07
SNTO International Trade Limited	14.20
Suntown Technology Group Corporation Limited	14.20
Xiamen Xiashun Aluminum Foil Co., Ltd	14.20
Yinbang Clad Material Co., Ltd	14.20
Luoyang Longding Aluminium Industries Co., Ltd	14.20

Notification to Interested Parties

This notice is issued and published in accordance with sections 751(a)(1) and 777(i)(1) of the Tariff Act of 1930, as amended, and 19 CFR 351.221(b)(5).

Dated: January 5, 2022.

Ryan Majerus,

Deputy Assistant Secretary for Policy and Negotiations, Performing the Non-Exclusive Functions and Duties of the Assistant Secretary Enforcement and Compliance.

[FR Doc. 2022–00282 Filed 1–10–22; 8:45 am]

BILLING CODE 3510–DS–P

[1] *See Certain Aluminum Foil from the People's Republic of China: Final Results of Countervailing Duty Administrative Review; 2019,* 86 FR 73249 (December 27, 2021); *see also Certain Aluminum Foil from the People's Republic of China: Amended Final Affirmative Countervailing Duty Determination and Countervailing Duty Order,* 83 FR 17360 (April 19, 2018) (*Order*).

[2] In the first administrative review of the *Order,* Commerce found the following companies to be cross-owned: Anhui Maximum Aluminum Industries Company Ltd.; Jiangsu Huafeng Aluminum Industry Co. Ltd.; Jiangsu Zhongji Lamination Materials Co., Ltd.; Jiangsu Zhongji Lamination Materials Co., (HK) Ltd.; Shantou Wanshun Material Stock Co., Ltd.; and Anhui Maximum Aluminum Industries Company Limited. The subsidy rate applies to all cross-owned companies. *See Certain Aluminum Foil from the People's Republic of China: Final Results of the Countervailing Duty Administrative Review; 2017–2018,* 86 FR 12171 (March 2, 2021).

[3] In the investigation, Commerce found the following companies to be cross-owned: Dingsheng Aluminum Industries (Hong Kong) Trading Co., Ltd.; Hangzhou DingCheng Aluminum Co., Ltd.; Hangzhou Dingsheng Import & Export Co. Ltd.; Hangzhou Dingsheng Industrial Group Co. Ltd.; Hangzhou Five Star Aluminum Co., Ltd.; Hangzhou Teemful Aluminum Co., Ltd.; Jiangsu Dingsheng New Materials Joint-Stock Co., Ltd.; Luoyang Longding Aluminum Co., Ltd.; and Walson (HK) Trading Co., Limited. The subsidy rate applies to all cross-owned companies. *See Order.*

DEPARTMENT OF COMMERCE

International Trade Administration

Antidumping or Countervailing Duty Order, Finding, or Suspended Investigation; Opportunity To Request Administrative Review and Join Annual Inquiry Service List

Editorial Note: Notice document 2021–28404 published in the issue of January 3,

2022 with missing text and tables. We are republishing the document here in its entirety.

AGENCY: Enforcement and Compliance, International Trade Administration, Department of Commerce.

FOR FURTHER INFORMATION CONTACT: Brenda E. Brown, Office of AD/CVD Operations, Customs Liaison Unit, Enforcement and Compliance, International Trade Administration, U.S. Department of Commerce, 1401 Constitution Avenue NW, Washington, DC 20230, telephone: (202) 482–4735.

Background

Each year during the anniversary month of the publication of an antidumping or countervailing duty order, finding, or suspended investigation, an interested party, as defined in section 771(9) of the Tariff Act of 1930, as amended (the Act), may request, in accordance with 19 CFR 351.213, that the Department of Commerce (Commerce) conduct an administrative review of that antidumping or countervailing duty order, finding, or suspended investigation.

All deadlines for the submission of comments or actions by Commerce discussed below refer to the number of calendar days from the applicable starting date.

Respondent Selection

In the event Commerce limits the number of respondents for individual examination for administrative reviews initiated pursuant to requests made for the orders identified below, Commerce intends to select respondents based on U.S. Customs and Border Protection (CBP) data for U.S. imports during the period of review. We intend to release the CBP data under Administrative Protective Order (APO) to all parties having an APO within five days of publication of the initiation notice and to make our decision regarding respondent selection within 35 days of publication of the initiation **Federal Register** notice. Therefore, we encourage all parties interested in commenting on respondent selection to submit their APO applications on the date of publication of the initiation notice, or as soon thereafter as possible. Commerce invites comments regarding the CBP data and respondent selection within five days of placement of the CBP data on the record of the review.

In the event Commerce decides it is necessary to limit individual examination of respondents and conduct respondent selection under section 777A(c)(2) of the Act:

In general, Commerce finds that determinations concerning whether particular companies should be ''collapsed'' (*i.e.,* treated as a single entity for purposes of calculating antidumping duty rates) require a substantial amount of detailed information and analysis, which often require follow-up questions and analysis. Accordingly, Commerce will not conduct collapsing analyses at the respondent selection phase of a review and will not collapse companies at the respondent selection phase unless there has been a determination to collapse certain companies in a previous segment of this antidumping proceeding (*i.e.,* investigation, administrative review, new shipper review or changed circumstances review). For any company subject to a review, if Commerce determined, or continued to treat, that company as collapsed with others, Commerce will assume that such companies continue to operate in the same manner and will collapse them for respondent selection purposes. Otherwise, Commerce will not collapse companies for purposes of respondent selection. Parties are requested to: (a) Identify which companies subject to review previously were collapsed; and (b) provide a citation to the proceeding in which they were collapsed. Further, if companies are requested to complete a Quantity and Value Questionnaire for purposes of respondent selection, in general each company must report volume and value data separately for itself. Parties should not include data for any other party, even if they believe they should be treated as a single entity with that other party. If a company was collapsed with another company or companies in the most recently completed segment of a proceeding where Commerce considered collapsing that entity, complete quantity and value data for that collapsed entity must be submitted.

Deadline for Withdrawal of Request for Administrative Review

Pursuant to 19 CFR 351.213(d)(1), a party that requests a review may withdraw that request within 90 days of the date of publication of the notice of initiation of the requested review. The regulation provides that Commerce may extend this time if it is reasonable to do so. Determinations by Commerce to extend the 90-day deadline will be made on a case-by-case basis.

Deadline for Particular Market Situation Allegation

Section 504 of the Trade Preferences Extension Act of 2015 amended the Act by adding the concept of particular market situation (PMS) for purposes of constructed value under section 773(e) of the Act.[1] Section 773(e) of the Act states that ''if a particular market situation exists such that the cost of materials and fabrication or other processing of any kind does not accurately reflect the cost of production in the ordinary course of trade, the administering authority may use another calculation methodology under this subtitle or any other calculation methodology.'' When an interested party submits a PMS allegation pursuant to section 773(e) of the Act, Commerce will respond to such a submission consistent with 19 CFR 351.301(c)(2)(v). If Commerce finds that a PMS exists under section 773(e) of the Act, then it will modify its dumping calculations appropriately.

Neither section 773(e) of the Act nor 19 CFR 351.301(c)(2)(v) set a deadline for the submission of PMS allegations and supporting factual information. However, in order to administer section 773(e) of the Act, Commerce must receive PMS allegations and supporting factual information with enough time to consider the submission. Thus, should an interested party wish to submit a PMS allegation and supporting new factual information pursuant to section 773(e) of the Act, it must do so no later than 20 days after submission of initial Section D responses.

Opportunity to request a review: Not later than the last day of January 2022,[2] interested parties may request administrative review of the following orders, findings, or suspended investigations, with anniversary dates in January for the following periods:

[1] *See* Trade Preferences Extension Act of 2015, Public Law 114–27, 129 Stat. 362 (2015).

[2] Or the next business day, if the deadline falls on a weekend, federal holiday or any other day when Commerce is closed.

	Period
Antidumping Duty Proceedings	
BELARUS: Carbon and Alloy Steel Wire Rod, A–822–806	1/1/21–12/31/21
BRAZIL: Prestressed Concrete Steel Wire Stand, A–351–837	1/1/21–12/31/21
CANADA: Softwood Lumber, A–122–857	1/1/21–12/31/21
GERMANY: Forged Steel Fluid End Blocks, A–428–847	7/23/20–12/31/21
INDIA:	
Prestressed Concrete Steel Wire Strand, A–533–828	1/1/21–12/31/21
Polyester Textured Yarn, A–533–885	1/1/21–12/31/21
ITALY: Forged Steel Fluid End Blocks, A–475–840	7/23/20–12/31/21
MEXICO: Prestressed Concrete Steel Wire Strand, A–201–831	1/1/21–12/31/21
REPUBLIC OF KOREA: Prestressed Concrete Steel Wire Strand, A–580–852	1/1/21–12/31/21
RUSSIA: Carbon and Alloy Steel Wire Rod, A–821–824	1/1/21–12/31/21
SOUTH AFRICA: Ferrovanadium, A–791–815	1/1/21–12/31/21
THAILAND: Prestressed Concrete Steel Wire Strand, A–549–820	1/1/21–12/31/21
THE PEOPLE'S REPUBLIC OF CHINA:	
Calcium Hypochlorite, A–570–008	1/1/21–12/31/21
Carbon and Certain Alloy Steel Wire Rod, A–570–012	1/1/21–12/31/21
Certain Crepe Paper Products, A–570–895	1/1/21–12/31/21
Certain Hardwood Plywood Products, A–570–051	1/1/21–12/31/21
Ferrovanadium, A–570–873	1/1/21–12/31/21
Folding Gift Boxes, A–570–866	1/1/21–12/31/21
Polyester Textured Yarn, A–570–097	1/1/21–12/31/21
Potassium Permanganate, A–570–001	1/1/21–12/31/21
Wooden Bedroom Furniture, A–570–890	1/1/21–12/31/21
UNITED ARAB EMIRATES: Carbon and Alloy Steel Wire Rod, A–520–808	1/1/21–12/31/21
Countervailing Duty Proceedings	
ARGENTINA: Biodiesel, C–357–821	1/1/21–12/31/21
CANADA: Softwood Lumber, C–122–858	1/1/21–12/31/21
GERMANY: Forged Steel Fluid End Blocks, C–428–848	5/26/20–12/31/21
INDIA:	
Polyester Textured Yarn, C–533–886	1/1/21–12/31/21
Forged Steel Fluid End Blocks, C–533–894	5/26/20–12/31/21
INDONESIA: Biodiesel, C–560–831	1/1/21–12/31/21
ITALY: Forged Steel Fluid End Blocks, C–475–841	5/26/20–12/31/21
THE PEOPLE'S REPUBLIC OF CHINA:	
Calcium Hypochlorite, C–570–009	1/1/21–12/31/21
Carbon and Certain Alloy Steel Wire Rod, C–570–013	1/1/21–12/31/21
Circular Welded Carbon Quality Steel Line Pipe, C–570–936	1/1/21–12/31/21
Certain Hardwood Plywood Products, C–570–052	1/1/21–12/31/21
Certain Oil Country Tubular Goods, C–570–944	1/1/21–12/31/21
Certain Tool Chests and Cabinets, C–570–057	1/1/21–12/31/21
Forged Steel Fluid End Blocks, C–570–116	5/26/2020–12/31/2021
Polyester Textured Yarn, C–570–098	1/1/21–12/31/21
Suspension Agreements	
RUSSIA: Certain Cut To Length Carbon Steel Plate, A–821–808	1/1/21–12/31/21

In accordance with 19 CFR 351.213(b), an interested party as defined by section 771(9) of the Act may request in writing that the Secretary conduct an administrative review. For both antidumping and countervailing duty reviews, the interested party must specify the individual producers or exporters covered by an antidumping finding or an antidumping or countervailing duty order or suspension agreement for which it is requesting a review. In addition, a domestic interested party or an interested party described in section 771(9)(B) of the Act must state why it desires the Secretary to review those particular producers or exporters. If the interested party intends for the Secretary to review sales of merchandise by an exporter (or a producer if that producer also exports merchandise from other suppliers) which was produced in more than one country of origin and each country of origin is subject to a separate order, then the interested party must state specifically, on an order-by-order basis, which exporter(s) the request is intended to cover.

Note that, for any party Commerce was unable to locate in prior segments, Commerce will not accept a request for an administrative review of that party absent new information as to the party's location. Moreover, if the interested party who files a request for review is unable to locate the producer or exporter for which it requested the review, the interested party must provide an explanation of the attempts it made to locate the producer or exporter at the same time it files its request for review, in order for the Secretary to determine if the interested party's attempts were reasonable, pursuant to 19 CFR 351.303(f)(3)(ii).

As explained in *Antidumping and Countervailing Duty Proceedings: Assessment of Antidumping Duties,* 68 FR 23954 (May 6, 2003), and *Non-Market Economy Antidumping Proceedings: Assessment of Antidumping Duties,* 76 FR 65694 (October 24, 2011), Commerce clarified its practice with respect to the collection of final antidumping duties on imports of merchandise where intermediate firms are involved. The public should be aware of this clarification in determining whether to request an administrative review of

merchandise subject to antidumping findings and orders.[3]

Commerce no longer considers the non-market economy (NME) entity as an exporter conditionally subject to an antidumping duty administrative reviews.[4] Accordingly, the NME entity will not be under review unless Commerce specifically receives a request for, or self-initiates, a review of the NME entity.[5] In administrative reviews of antidumping duty orders on merchandise from NME countries where a review of the NME entity has not been initiated, but where an individual exporter for which a review was initiated does not qualify for a separate rate, Commerce will issue a final decision indicating that the company in question is part of the NME entity. However, in that situation, because no review of the NME entity was conducted, the NME entity's entries were not subject to the review and the rate for the NME entity is not subject to change as a result of that review (although the rate for the individual exporter may change as a function of the finding that the exporter is part of the NME entity). Following initiation of an antidumping administrative review when there is no review requested of the NME entity, Commerce will instruct CBP to liquidate entries for all exporters not named in the initiation notice, including those that were suspended at the NME entity rate.

All requests must be filed electronically in Enforcement and Compliance's Antidumping and Countervailing Duty Centralized Electronic Service System (ACCESS) on Enforcement and Compliance's ACCESS website at *https://access.trade.gov*.[6] Further, in accordance with 19 CFR 351.303(f)(l)(i), a copy of each request must be served on the petitioner and each exporter or producer specified in the request. Note that Commerce has temporarily modified certain of its requirements for serving documents containing business proprietary information, until further notice.[7]

Commerce will publish in the **Federal Register** a notice of ''Initiation of Administrative Review of Antidumping or Countervailing Duty Order, Finding, or Suspended Investigation'' for requests received by the last day of January 2022. If Commerce does not receive, by the last day of January 2022, a request for review of entries covered by an order, finding, or suspended investigation listed in this notice and for the period identified above, Commerce will instruct CBP to assess antidumping or countervailing duties on those entries at a rate equal to the cash deposit of estimated antidumping or countervailing duties required on those entries at the time of entry, or withdrawal from warehouse, for consumption and to continue to collect the cash deposit previously ordered.

For the first administrative review of any order, there will be no assessment of antidumping or countervailing duties on entries of subject merchandise entered, or withdrawn from warehouse, for consumption during the relevant provisional-measures ''gap'' period of the order, if such a gap period is applicable to the period of review.

Establishment of and Updates to the Annual Inquiry Service List

On September 20, 2021, Commerce published the final rule titled ''*Regulations to Improve Administration and Enforcement of Antidumping and Countervailing Duty Laws*'' in the **Federal Register**.[8] On September 27, 2021, Commerce also published the notice entitled ''*Scope Ruling Application; Annual Inquiry Service List; and Informational Sessions*'' in the **Federal Register**.[9] The *Final Rule* and *Procedural Guidance* provide that Commerce will maintain an annual inquiry service list for each order or suspended investigation, and any interested party submitting a scope ruling application or request for circumvention inquiry shall serve a copy of the application or request on the persons on the annual inquiry service list for that order, as well as any companion order covering the same merchandise from the same country of origin.[10]

In accordance with the *Procedural Guidance,* for orders published in the **Federal Register** before November 4, 2021, Commerce created an annual inquiry service list segment for each order and suspended investigation. Interested parties who wished to be added to the annual inquiry service list for an order submitted an entry of appearance to the annual inquiry service list segment for the order in ACCESS, and on November 4, 2021, Commerce finalized the initial annual inquiry service lists for each order and suspended investigation. Each annual inquiry service list has been saved as a public service list in ACCESS, under each case number, and under a specific segment type called ''AISL-Annual Inquiry Service List.''[11]

As mentioned in the *Procedural Guidance,* beginning in January 2022, Commerce will update these annual inquiry service lists on an annual basis when the *Opportunity Notice* for the anniversary month of the order or suspended investigation is published in the **Federal Register**.[12] Accordingly, Commerce will update the annual inquiry service lists for the above-listed antidumping and countervailing duty proceedings. All interested parties wishing to appear on the updated annual inquiry service list must take one of the two following actions: (1) New interested parties who did not previously submit an entry of appearance must submit a new entry of appearance at this time; (2) Interested parties who were included in the preceding annual inquiry service list must submit an amended entry of appearance to be included in the next year's annual inquiry service list. For these interested parties, Commerce will change the entry of appearance status from ''Active'' to ''Needs Amendment'' for the annual inquiry service lists corresponding to the above-listed proceedings. This will allow those interested parties to make any necessary amendments and resubmit their entries of appearance. If no amendments need to be made, the interested party should indicate in the area on the ACCESS form requesting an explanation for the

[3] *See* the Enforcement and Compliance website at *https://www.trade.gov/us-antidumping-and-countervailing-duties.*

[4] *See Antidumping Proceedings: Announcement of Change in Department Practice for Respondent Selection in Antidumping Duty Proceedings and Conditional Review of the Nonmarket Economy Entity in NME Antidumping Duty Proceedings,* 78 FR 65963 (November 4, 2013).

[5] In accordance with 19 CFR 351.213(b)(1), parties should specify that they are requesting a review of entries from exporters comprising the entity, and to the extent possible, include the names of such exporters in their request.

[6] *See Antidumping and Countervailing Duty Proceedings: Electronic Filing Procedures; Administrative Protective Order Procedures,* 76 FR 39263 (July 6, 2011).

[7] *See Temporary Rule Modifying AD/CVD Service Requirements Due to COVID–19,* 85 FR 41363 (July 10, 2020).

[8] *See Regulations to Improve Administration and Enforcement of Antidumping and Countervailing Duty Laws,* 86 FR 52300 (September 20, 2021) (*Final Rule*).

[9] *See Scope Ruling Application; Annual Inquiry Service List; and Informational Sessions,* 86 FR 53205 (September 27, 2021) (*Procedural Guidance*).

[10] *Id.*

[11] This segment has been combined with the ACCESS Segment Specific Information (SSI) field which will display the month in which the notice of the order or suspended investigation was published in the **Federal Register**, also known as the anniversary month. For example, for an order under case number A–000–000 that was published in the **Federal Register** in January, the relevant segment and SSI combination will appear in ACCESS as ''AISL-January Anniversary.'' Note that there will be only one annual inquiry service list segment per case number, and the anniversary month will be pre-populated in ACCESS.

[12] *See Procedural Guidance,* 86 FR at 53206.

amendment that it is resubmitting its entry of appearance for inclusion in the annual inquiry service list for the following year. As mentioned in the *Final Rule,*[13] once the petitioners and foreign governments have submitted an entry of appearance for the first time, they will automatically be added to the updated annual inquiry service list each year.

Interested parties have 30 days after the date of this notice to submit new or amended entries of appearance. Commerce will then finalize the annual inquiry service lists five business days thereafter. For ease of administration, please note that Commerce requests that law firms with more than one attorney representing interested parties in a proceeding designate a lead attorney to be included on the annual inquiry service list.

Commerce may update an annual inquiry service list at any time as needed based on interested parties' amendments to their entries of appearance to remove or otherwise modify their list of members and representatives, or to update contact information. Any changes or announcements pertaining to these procedures will be posted to the ACCESS website at *https://access.trade.gov.*

Special Instructions for Petitioners and Foreign Governments

In the *Final Rule,* Commerce stated that, ''after an initial request and placement on the annual inquiry service list, both petitioners and foreign governments will automatically be placed on the annual inquiry service list in the years that follow.''[14] Accordingly, as stated above and pursuant to 19 CFR 351.225(n)(3), the petitioners and foreign governments will not need to resubmit their entries of appearance each year to continue to be included on the annual inquiry service list. However, the petitioners and foreign governments are responsible for making amendments to their entries of appearance during the annual update to the annual inquiry service list in accordance with the procedures described above.

This notice is not required by statute but is published as a service to the international trading community.

Dated: December 16, 2021.

James Maeder,

Deputy Assistant Secretary for Antidumping and Countervailing Duty Operations.

[FR Doc. R1–2021–28404 Filed 1–10–22; 8:45 am]

BILLING CODE 0099–10–D

DEPARTMENT OF COMMERCE

International Trade Administration

Antidumping or Countervailing Duty Order, Finding, or Suspended Investigation; Advance Notification of Sunset Review

Editorial Note: Notice document 2021–28406 published in the issue of January 3, 2022, with extraneous text and tables. It is being republished here in its entirety.

AGENCY: Enforcement and Compliance, International Trade Administration, Department of Commerce.

Background

Every five years, pursuant to the Tariff Act of 1930, as amended (the Act), the Department of Commerce (Commerce) and the International Trade Commission automatically initiate and conduct reviews to determine whether revocation of a countervailing or antidumping duty order or termination of an investigation suspended under section 704 or 734 of the Act would be likely to lead to continuation or recurrence of dumping or a countervailable subsidy (as the case may be) and of material injury.

Upcoming Sunset Reviews for February 2022

Pursuant to section 751(c) of the Act, the following Sunset Reviews are scheduled for initiation in February 2022 and will appear in that month's *Notice of Initiation of Five-Year Sunset Reviews* (Sunset Review).

	Department contact
Antidumping Duty Proceedings	
Ammonium Sulfate from China, A–570–049 (1st Review)	Thomas Martin, (202) 482–3936.
Amorphous Silica Fabric from China, A–570–038 (1st Review)	Jacky Arrowsmith, (202) 482–5255.
Artist Canvas from China, A–570–899 (3rd Review)	Mary Kolberg, (202) 482–1785.
Biaxial Integral Geogrid Products from China, A–570–036 (1st Review)	Thomas Martin, (202) 482–3936.
Off-The-Road Tires from India, A–533–869 (1st Review)	Thomas Martin, (202) 482–3936.
Countervailing Duty Proceedings	
Ammonium Sulfate from China, C–570–050 (1st Review)	Thomas Martin, (202) 482–3936.
Amorphous Silica Fabric from China, C–570–039 (1st Review)	Jacky Arrowsmith, (202) 482–5255.
Biaxial Integral Geogrid Products from China, C–570–037 (1st Review)	Thomas Martin, (202) 482–3936.
Off-The-Road Tires from India, C–533–870 (1st Review)	Jacky Arrowsmith, (202) 482–5255.

Suspended Investigations

No Sunset Review of suspended investigations is scheduled for initiation in February 2022.

Commerce's procedures for the conduct of Sunset Review are set forth in 19 CFR 351.218. The *Notice of Initiation of Five-Year (Sunset) Review* provides further information regarding what is required of all parties to participate in Sunset Review.

Pursuant to 19 CFR 351.103(c), Commerce will maintain and make available a service list for these proceedings. To facilitate the timely preparation of the service list(s), it is requested that those seeking recognition as interested parties to a proceeding contact Commerce in writing within 10 days of the publication of the Notice of Initiation.

Please note that if Commerce receives a Notice of Intent to Participate from a member of the domestic industry within 15 days of the date of initiation, the review will continue.

Thereafter, any interested party wishing to participate in the Sunset Review must provide substantive comments in response to the notice of initiation no later than 30 days after the date of initiation. Note that Commerce

[13] *See Final Rule,* 86 FR at 52335.

[14] *Id.*

has modified certain of its requirements for serving documents containing business proprietary information, until further notice.[1]

This notice is not required by statute but is published as a service to the international trading community.

Dated: December 14, 2021.

James Maeder,

Deputy Assistant Secretary for Antidumping and Countervailing Duty Operations.

[FR Doc. R1–2021–28406 Filed 1–10–22; 8:45 am]

BILLING CODE 0099–10–D

DEPARTMENT OF COMMERCE

National Oceanic and Atmospheric Administration

[RTID 0648–XB718]

Marine Mammals and Endangered Species

AGENCY: National Marine Fisheries Service (NMFS), National Oceanic and Atmospheric Administration (NOAA), Commerce.

ACTION: Notice; issuance of permits and permit amendments.

SUMMARY: Notice is hereby given that permits and permit amendments have been issued to the following entities under the Marine Mammal Protection Act (MMPA) and the Endangered Species Act (ESA), as applicable.

ADDRESSES: The permits and related documents are available for review upon written request via email to *NMFS.Pr1Comments@noaa.gov.*

FOR FURTHER INFORMATION CONTACT: Jennifer Skidmore (Permit No. 25794), Sara Young (Permit No. 18059–01), and Shasta McClenahan, Ph.D. (Permit No. 18786–06); at (301) 427–8401.

SUPPLEMENTARY INFORMATION: Notices were published in the **Federal Register** on the dates listed below that requests for a permit or permit amendment had been submitted by the below-named applicants. To locate the **Federal Register** notice that announced our receipt of the application and a complete description of the activities, go to *www.federalregister.gov* and search on the permit number provided in Table 1 below.

TABLE 1—ISSUED PERMITS AND PERMIT AMENDMENTS

Permit No.	RTID	Applicant	Previous **Federal Register** Notice	Issuance date
18059–01	0648–XF085	David Wiley, Ph.D., Stellwagen Bank National Marine Sanctuary, 175 Edward Foster Rd, Scituate, MA 02006.	82 FR 16998; April 7, 2017.	December 13, 2021.
18786–06	0648–XA941	NMFS Office of Protected Resources, Marine Mammal Health and Stranding Response Program, 1315 East West Highway, Silver Spring, MD 20910 (Responsible Party: Teri Rowles, D.V.M., Ph.D.).	86 FR 14612; March 17, 2021.	December 21, 2021.
25794	0648–XB460	Jennifer Burns, Ph.D., Texas Tech University, Biology Department, 2901 Main Street, Lubbock, TX 79409.	86 FR 54940; October 5, 2021.	December 13, 2021.

In compliance with the National Environmental Policy Act of 1969 (42 U.S.C. 4321 *et seq.*), for Permit Nos. 18059–01 (one year extension) and 25794, a final determination has been made that the activities proposed are categorically excluded from the requirement to prepare an environmental assessment or environmental impact statement.

For Permit No. 18786–06, an environmental assessment (EA) was prepared for the original permit (No. 18786) in compliance with the National Environmental Policy Act of 1969 (42 U.S.C. 4321 *et seq.*), to examine whether significant environmental impacts could result from issuance of the proposed scientific research permit. Based on the analyses in the EA, NMFS determined that issuance of the permit would not significantly impact the quality of the human environment and that preparation of an environmental impact statement was not required. That determination is documented in a Finding of No Significant Impact (FONSI), signed on June 29, 2015. The activities in this proposed amendment are consistent with the analyses in the original EA and no additional NEPA analysis is required for the issuance of this amendment. The original EA and FONSI are available upon request.

As required by the ESA, as applicable, issuance of these permit was based on a finding that such permits: (1) Were applied for in good faith; (2) will not operate to the disadvantage of such endangered species; and (3) are consistent with the purposes and policies set forth in Section 2 of the ESA.

Authority: The requested permits have been issued under the MMPA of 1972, as amended (16 U.S.C. 1361 *et seq.*), the regulations governing the taking and importing of marine mammals (50 CFR part 216), the ESA of 1973, as amended (16 U.S.C. 1531 *et seq.*), and the regulations governing the taking, importing, and exporting of endangered and threatened species (50 CFR parts 222–226), as applicable.

Dated: January 6, 2022.

Julia M. Harrison,

Chief, Permits and Conservation Division, Office of Protected Resources, National Marine Fisheries Service.

[FR Doc. 2022–00294 Filed 1–10–22; 8:45 am]

BILLING CODE 3510–22–P

DEPARTMENT OF COMMERCE

National Oceanic and Atmospheric Administration

[RTID 0648–XB526]

Magnuson-Stevens Fishery Conservation and Management Act; General Provisions for Domestic Fisheries; Application for Exempted Fishing Permit

AGENCY: National Marine Fisheries Service (NMFS), National Oceanic and

[1] *See Temporary Rule Modifying AD/CVD Service Requirements Due to COVID–19; Extension of Effective Period,* 85 FR 41363 (July 10, 2020).

Atmospheric Administration (NOAA), Commerce.

ACTION: Notice; request for comments.

SUMMARY: NMFS has determined that three exempted fishing permit (EFP) applications warrant further consideration and is requesting public comment on those applications and on the Pacific Fishery Management Council's (Council) recommendations following its September 2021 meeting. The EFP applicants request an exemption from a prohibition on the use of unauthorized gear to harvest highly migratory species (HMS) under the Fishery Management Plan for U.S. West Coast Fisheries for Highly Migratory Species (HMS FMP). The purpose of this exemption is to test the effects and efficacy of using new or alternative gear types to harvest swordfish and other HMS off of the U.S. West Coast.

DATES: Comments must be submitted in writing by February 10, 2022.

ADDRESSES: You may submit comments on this document, identified by NOAA–NMFS–2021–0106, by any of the following methods:

- *Electronic Submission:* Submit all electronic public comments via the Federal e-Rulemaking Portal. Go to *https://www.regulations.gov* and enter [NOAA–NMFS–2021–0106] in the Search box. Click on the ''Comment'' icon, complete the required fields, and enter or attach your comments.
- *Mail:* Submit written comments to Chris Fanning, NMFS West Coast Region, 501 W. Ocean Blvd., Suite 4200, Long Beach, CA 90802. Include the identifier ''NOAA–NMFS–2021–0106'' in the comments.
- *Email: wcr.hms@noaa.gov.*

Instructions: Comments sent by any other method, to any other address or individual, or received after the end of the comment period, may not be considered by NMFS. All comments received are a part of the public record and will be posted for public viewing on *www.regulations.gov* without change. All personal identifying information (*e.g.,* name, address, etc.), confidential business information, or otherwise sensitive information submitted voluntarily by the sender will be publicly accessible. NMFS will accept anonymous comments (enter ''N/A'' in the required fields if you wish to remain anonymous).

FOR FURTHER INFORMATION CONTACT: Chris Fanning, NMFS, West Coast Region, 562–980–4198.

SUPPLEMENTARY INFORMATION: Under the HMS FMP, Deep-Set Buoy Gear (DSBG) and midwater snap gear are not identified as legal commercial fishing gears. Use of these gears is currently only authorized under individual EFPs issued by NMFS upon the recommendation of the Council. At its June 2021 meeting, the Council reviewed 10 applications for HMS EFPs. The Council recommended that NMFS issue seven of the EFPs to authorize the use of DSBG and/or Deep-Set Linked Buoy Gear and that the Council consider the remaining three EFP applications (submitted by Mr. Bateman, Mr. Brown, and Mr. Perez) [1] at its September 2021 meeting.

Regarding Mr. Brown and Mr. Bateman's EFP applications, the Council recommended in September 2021 that NMFS issue a single EFP covering the activities proposed in both applications and identifying the gear-type as ''midwater snap gear.'' The Council further recommended that the EFP incorporate in its Terms and Conditions the protective measures described in the California Department of Fish and Wildlife Report [2] (but with a maximum of 150 hooks per set rather than the 75 hooks stated in the report), as well as the measures described in the Enforcement Consultant Committee Report.[3]

Regarding Mr. Perez's application, the Council did not take action on the portion of the application that requested authorization for fishing with DSBG and Night-Set Buoy Gear (NSBG) in selected areas in California state waters, as a Federal EFP is not applicable for activities in state waters. The Council did, however, recommend reissuance of Mr. Perez's existing EFP for activities in Federal waters, which would authorize the use of NSBG inside the U.S. Exclusive Economic Zone (EEZ). Council recommendations can be found in the September 2021 Council meeting Decision Document.[4]

At this time, NMFS is requesting public comment on the EFP applications from Mr. Bateman and Mr. Brown and the recommendations of the Council during its September 2021 meeting related to those two applications. NMFS is also requesting public comment regarding the reissuance of Mr. Perez's existing EFP. NMFS will take the Council's recommendations into consideration along with public comments on how and whether to issue the EFPs. If NMFS issues EFPs based on the September 2021 Council recommendations, a total of five vessels could be allowed to fish with midwater snap gear, and one vessel with NSBG, inside the U.S. EEZ. Vessels fishing under an EFP would be subject to existing regulations, including measures to mitigate interactions with protected species.

NMFS will consider all public comments submitted in response to this **Federal Register** notice prior to issuance of any EFP included in this notice. Additionally, NMFS will analyze the effects of issuing the EFPs in accordance with the National Environmental Policy Act and NOAA's Administrative Order 216–6, as well as for compliance with other applicable laws, including Section 7(a)(2) of the Endangered Species Act (16 U.S.C. 1531 *et seq.*), which requires the agency to consider whether the proposed action is likely to jeopardize the continued existence and recovery of any endangered or threatened species or result in the destruction or adverse modification of critical habitat.

Authority: 16 U.S.C. 1801 *et seq.*

Dated: January 6, 2022.

Ngagne Jafnar Gueye,

Acting Director, Office of Sustainable Fisheries, National Marine Fisheries Service.

[FR Doc. 2022–00310 Filed 1–10–22; 8:45 am]

BILLING CODE 3510–22–P

[1] See *https://www.pcouncil.org/june-2021-briefing-book/#F* (F.3. Attachment 4, F.3. Attachment 4, and F.3. Attachment 9).

[2] See *https://www.pcouncil.org/documents/2021/09/d-3-a-revised-supplemental-cdfw-report-1.pdf/.*

[3] See *https://www.pcouncil.org/documents/2021/09/d-3-a-supplemental-ec-report-1.pdf/.*

[4] See *https://www.pcouncil.org/september-2021-decision-document/#HMS.*

COURT SERVICES AND OFFENDER SUPERVISION AGENCY

Privacy Act of 1974; System of Records

AGENCY: Court Services and Offender Supervision Agency.

ACTION: Notice of a new system of records.

SUMMARY: Pursuant to the provisions of the Privacy Act of 1974, as amended, the Pretrial Services Agency for the District of Columbia (an independent entity established within the Court Services and Offender Supervision Agency (hereafter ''CSOSA'' or ''Agency'')) is issuing a public notice of its intent to create the Pretrial Services Agency for the District of Columbia Privacy Act system of records, the ''Employee Religious Exception Request Information System.'' This system of records maintains personal religious information collected in response to religious accommodation requests for religious exception from the federally mandated vaccination requirement in the context of a public health emergency or similar health and safety incident, such as a pandemic, epidemic, natural disaster or national or regional

emergency; and/or any other lawful collection of employee information or data that is necessary to ensure a safe and healthy environment for individuals who are occupying PSA facilities, attending PSA-sponsored events, or otherwise engaged in official business on behalf of the Agency. The system of records will assist the Agency in the collection, storing, dissemination, and disposal of employee religious exemption request information collected and maintained by the Agency, as referenced above.

DATES: This new system will be effective upon publication. New or modified routine uses will be effective February 10, 2022. Submit comments on or before February 10, 2022.

ADDRESSES: You may send comments identified any of the following methods:

- *Federal eRulemaking Portal: https://www.regulations.gov.* Follow the instructions for sending comments. The system of records will assist the Agency in the collection, storing, dissemination, and disposal of employee religious exception request information collected and maintained by the Agency, as referenced above.
- *Email: sheila.stokes@csosa.govpsa.gov.*
- *U.S. mail or hand-delivery:* Office of General Counsel, 800 North Capitol Street NW, Suite 702, Washington, DC 20001

Instructions: All submissions received must include the agency name. All comments received will be posted without change to *http://www.regulations.gov,* including any personal information provided.

Docket: For access to the docket to read background documents or comments received, go to *http://www.regulations.gov.*

FOR FURTHER INFORMATION CONTACT: Sheila Stokes, Senior Agency Official for Privacy, 800 North Capitol Street NW, 7th Floor, Washington, DC 20002, *sheila.stokes@csosa.gov* or phone number (202) 220–5797.

SUPPLEMENTARY INFORMATION:

I. Background

On September 9, 2021, the President issued Executive 14043, *Executive Order on Requiring Coronavirus Disease 2019 Coronavirus Disease 2019 Vaccination for Federal Employees,* requiring the COVID–19 vaccination for all Federal employees, subject to such exceptions as required by law. On October 4, 2021, the Safer Federal Workforce Task Force (''Task Force'') issued guidance to Federal agencies regarding collecting information for medical and religious accommodations. In order to meet the requirements of Executive Order 14043 and the Task Force recommendations, PSA is creating this system of records notice to permit the collection of information related to religious accommodations to the vaccination requirement. PSA maintains the ''Employee Religious Exception Request Information System'' in a secured electronic file repository. PSA is committed to providing all staff (employees, detailees, contractors, consultants, interns, applicants, and volunteers), visitors, and occupants of its facilities with a safe and healthy environment. To ensure and maintain the safety of all occupants during standard operations and public health emergencies or similar health and safety incidents, such as a pandemic, epidemic, natural disasters or national and regional emergency, PSA may develop and institute additional safety measures that require the collection of employee religious exception information from the federally mandated vaccination requirement. PSA is also committed to complying with the Federal employee COVID–19 vaccination requirement established by Executive 14043 unless the employee presents appropriate information in support of a legally-required exception.

PSA will collect religious accommodation requests for PSA staff (including employees, detailees, contractors, consultants, interns, and volunteers). Information will be collected, maintained, and disclosed in accordance with applicable law, regulations, and statutes, including, but not limited to, the authorities referenced herein. This newly established system will be included in the PSA inventory of record systems.

II. Privacy Act

The Privacy Act of 1974, as amended, embodies fair information practice principles in a statutory framework governing the means by which Federal agencies collect, maintain, use, and disseminate individuals' records. The Privacy Act applies to records about individuals that are maintained in a ''system of records.'' A ''system of records'' is a group of any records under the control of an agency from which information is retrieved by the name of an individual or by some identifying number, symbol, or other identifier particularly assigned to the individual. The Privacy Act defines an individual as a United States citizen or lawful permanent resident. Individuals may request access to their own records that are maintained in a system of records in the possession or under the control of PSA by complying with Privacy Act regulations at 43 CFR part 2, subpart K, and following the procedures outlined in the Records Access, Contesting Record, and Notification Procedures sections of this notice.

The Privacy Act requires all federal Executive Branch agencies to publish in the **Federal Register** a description denoting the existence and character of each system of records that the agency maintains, and the routine uses of each system. The ''Employee Religious Exception Request Information System'' system of records notice is published in its entirety below. In accordance with 5 U.S.C. 552a(r), PSA [through CSOSA] has provided a report of this system of records to the Office of Management and Budget and to Congress.

III. Public Participation

You should be aware your entire comment including your personally identifiable information, such as your address, phone number, email address, or any other personal information in your comment, may be made publicly available at any time. While you may request to withhold your personally identifiable information from public review, we cannot guarantee we will be able to do so.

SYSTEM NAME:

PSA, Employee Religious Exception Request Information System.

SECURITY CLASSIFICATION:

Unclassified.

SYSTEM LOCATION:

This system is hosted in a facility maintained by the Court Services and Offender Supervision Agency at 800 North Capitol Street NW, 7th Floor, Washington, DC 20004.

SYSTEM MANAGER(S) AND ADDRESS:

The system is maintained by the Pretrial Services Agency for the District of Columbia Office of Information Technology located at 601 Indiana Avenue NW, Washington, DC 20004.

AUTHORITY FOR MAINTENANCE OF THE SYSTEM:

The authority to collect this information derives from 5 U.S.C. 8474, 5 U.S.C. 301, 42 U.S.C. 2000e *et seq.*, 42 U.S.C. 2000bb *et seq.,* 44 U.S.C. 3101, Executive Order 13164 (July 28, 2000), and Executive Order 13548 (July 10, 2021).

PURPOSE(S) OF THE SYSTEM:

The primary purpose of the secured electronic file repository is to collect, maintain, use, and—to the extent appropriate and necessary—disseminate employee religious exception request information collected by the Agency in

the context of the federally mandated COVID–19 vaccination requirement. The purpose of the secured electronic file repository is also to comply with Executive Order 14043 and applicable implementation guidance. PSA will use the information in processing religious accommodation requests and to determine the appropriate health and safety protocols for employees in the context of the federally mandated COVID–19 vaccination. The secured electronic file repository enables PSA to log, track, and manage employee religious exception request information while leveraging technology to protect and secure the privacy of the records maintained in the system

CATEGORIES OF INDIVIDUALS COVERED BY THE SYSTEM:

Individuals covered include but are not limited to PSA employees, detailees, contractors, consultants, interns, applicants, and volunteers.

CATEGORIES OF RECORDS IN THE SYSTEM:

The employee religious exception request information and records may contain some or all of the following records: Religious accommodation requests, including Request for a Religious Exception to the COVID–19 Vaccination Requirement form, notes, religious affiliation, or records made during consideration of requests, and decisions on requests. These records may contain general personal data, including but not limited to the employee's, detailee's, contractor's, consultant's, intern's, applicant's or volunteer's name, date of birth, religion, alias, home address, telephone number, age, and email address, telephone number, job title, email address, work address, and program office to which the employee is assigned.

RECORD SOURCE CATEGORIES:

Records in this system are obtained directly from the employee, detailee, contractor, consultant, intern, applicant, and volunteer, therefore, the accuracy is ensured by collecting the information from the source who may be required to certify under penalty of perjury that the information is true and accurate to the best of their knowledge.

ROUTINE USES OF RECORDS MAINTAINED IN THE SYSTEM INCLUDING CATEGORIES OF USERS AND THE PURPOSES OF SUCH USES:

In addition to those disclosures generally permitted under 5 U.S.C. 552a (b) of the Privacy Act, all or a portion of the records or information contained in this system may be disclosed outside PSA as a routine use pursuant to 5 U.S.C. 552a (b)(3) as follows:

A. To the appropriate Federal, State, or local agency responsible for investigating, prosecuting, enforcing, or implementing a statute, rule, regulation, or order, where alone or in conjunction with other information, a violation or potential violation of a civil or criminal law or regulation is indicated.

B. To a Member of Congress or his or her staff on behalf of and at the request of the individual who is the subject of the record.

C. To another Federal agency or a party in litigation before a court or in an administrative proceeding being conducted by a Federal agency, when the Government is a party to the judicial or administrative proceeding, and such information is the subject of a court order directing disclosure or deemed by PSA to be relevant and necessary to the litigation.

D. To the National Archives and Records Administration in records management and inspections.

E. By PSA, in the production of summary descriptive statistics and analytical studies in support of the function for which the records are collected and maintained, or for related workforce studies. While published statistics and studies do not contain individual identifiers, in some instances, the selection of elements of data included in the study may be structured in such a way as to make the data individually identifiable by inference.

F. To disclose information to the Department of Justice or in a proceeding before a court, adjudicative body, or other administrative body before which CSOSA is authorized to appear, when:

1. PSA, or any component thereof; or

2. Any employee of PSA in his or her official capacity; or

3. Any employee of PSA in his or her individual capacity where the Department of Justice or PSA has agreed to represent the employee; or the United States, when PSA determines that litigation is likely to affect PSA or any of its components, is a party to litigation or has an interest in such litigation, and the use of such records by the Department of Justice or PSA is deemed by PSA to be relevant and necessary to the litigation.

G. To disclose information to officials of the Merit Systems Protection Board or the Office of the Special Counsel, when requested in connection with appeals, special studies of the civil service and other merit systems, review of OPM rules and regulations, investigations of alleged or possible prohibited personnel practices, and such other functions as promulgated in 5 U.S.C. 1205 and 1206, or as may be authorized by law.

H. To disclose information to the U.S. Equal Employment Opportunity Commission (''EEOC'') when requested in connection with investigations into alleged or possible discrimination practices in the Federal sector, examination of Federal affirmative employment programs, compliance by Federal agencies with the Uniform Guidelines of Employee Selection Procedures, or other functions vested in the Commission.

I. To disclose information to the Federal Labor Relations Authority or its General Counsel when requested in connection with investigations of allegations of unfair labor practices of matters before the Federal Service Impasses Panel.

J. To authorized contractors, vendors, grantees, or volunteers performing or working on a contract, service, grant, cooperative agreement, or job for PSA or the Federal government that is in the performance of an official Federal duty relative to which the information is deemed relevant.

K. To an appeal, grievance, hearing, or complaints examiner; an equal opportunity investigator, arbitrator, or mediator; and an exclusive representative or other person authorized to investigate or settle a grievance, complaint, or appeal filed by an individual who is the subject of the record.

L. For Data Breach and Mitigation Response to provide information to appropriate agencies, entities, and persons when;

(1) PSA suspects or has confirmed that there has been a breach of the system of records; (2) PSA has determined that as a result of the suspected or confirmed breach there is a risk of harm to individuals, PSA (including its information systems, programs, and operations), the Federal Government, or national security; and (3) the disclosure made to such agencies, entities, and persons is reasonably necessary to assist in connection with PSA's efforts to respond to the suspected or confirmed breach or to prevent, minimize, or remedy such harm.

M. To provide information to another Federal agency or Federal entity, when PSA determines that information from this system of records is reasonably necessary to assist the recipient agency or entity in (1) responding to a suspected or confirmed breach, or (2) preventing, minimizing, or remedying the risk of harm to individuals, the recipient agency or entity (including its information systems, programs and operations), the Federal Government, or

national security, resulting from a suspected or confirmed breach.

DISCLOSURE TO CONSUMER REPORTING AGENCIES:

None.

POLICIES AND PRACTICES FOR STORAGE OF RECORDS:

Records in this system of records are stored electronically. Electronic records are stored on CSOSA's secure network or cloud-based software using the Federal Risk and Authorization Management Program (FedRAMP) approved platform.

POLICIES AND PRACTICES FOR RETRIEVAL OF RECORDS:

Information covered by this system of records notice may be retrieved by the name of the individual.

POLICIES AND PRACTICES FOR RETENTION AND DISPOSAL OF RECORDS:

PSA will work as may be necessary with the National Archives and Records Administration (NARA) to draft and secure approval of a records disposition schedule to cover the records described in this SORN, to the extent records pertaining to religious accommodation have not already been scheduled. Until any such records disposition schedule is approved by NARA, PSA will maintain, and not destroy, these records.

ADMINISTRATIVE, TECHNICAL AND PHYSICAL SAFEGUARDS:

Records are protected from unauthorized access and improper use through administrative, technical, and physical security measures. Administrative safeguards within PSA include annual information security, privacy and record management training that are in place to ensure the records are not accessed, used or disclosed in an unauthorized manner. Technical security safeguards within PSA include restrictions on computer access to authorized individuals who have a legitimate need to know the information; required use of strong passwords that are frequently changed; multi-factor authentication for remote access and access to many CSOSA network components; use of encryption for certain data types and transfers; firewalls and intrusion detection applications; and regular review of security procedures and best practices to enhance security. Physical safeguards include restrictions on building access to authorized individuals, security guard service, maintenance of records in lockable offices and filing cabinets.

RECORD ACCESS PROCEDURES:

Individuals requesting access to their individual records should send a signed, written inquiry to the System Manager identified above.

CONTESTING RECORD PROCEDURES:

Individuals contesting the content of records about themselves contained in this system of records should follow the Notification Procedure below.

NOTIFICATION PROCEDURES:

Individuals requesting notification of the existence of records on themselves or requesting access to their individual records must send a signed, written inquiry to Sheila Stokes, Senior Agency Official for Privacy, 800 North Capitol Street NW, 7th Floor, Washington, DC 20002, *sheila.stokes@csosa.gov* or phone number (202) 220–5797. The request envelope (or subject line) and letter should both be clearly marked ''PRIVACY ACT INQUIRY.'' A request for notification must meet the requirements of 43 CFR 2.235.

EXEMPTIONS PROMULGATED FOR THE SYSTEM:

None.

HISTORY:

None.

Sheila Stokes,

General Counsel.

[FR Doc. 2021–28135 Filed 1–10–22; 8:45 am]

BILLING CODE 3129–04–P

COURT SERVICES AND OFFENDER SUPERVISION AGENCY

Privacy Act of 1974; System of Records

AGENCY: Court Services and Offender Supervision Agency.

ACTION: Notice of a new system of records.

SUMMARY: Pursuant to the provisions of the Privacy Act of 1974, as amended, Court Services and Offender Supervision Agency (hereafter ''CSOSA'' or ''Agency'') is issuing a public notice of its intent to create the Court Services and Offender Supervision Agency Privacy Act system of records, ''Personal Health and Religious Information.'' This system of records maintains personal health and religious information collected in response to reasonable accommodation requests for disability (or medical) or religious exception; a public health emergency or similar health and safety incident, such as a pandemic, epidemic, or man-made emergency; and/or any other lawful collection of health-related information or data that is necessary to ensure a safe and healthy environment for individuals who are occupying CSOSA facilities, attending CSOSA-sponsored events, or otherwise engaged in official business on behalf of the Agency, including but not limited to Executive Order 12564, Drug Free Federal Workplace (Sept. 15, 1986), Occupational Safety and Health Administration (OSHA) compliance, Office of Workers' Compensation Programs (OWCP) claims, leave administration, disability retirement, medically-related decisions such as fitness-for-duty decisions, and health and wellness programs. The system of records will assist the Agency in the collection, storing, dissemination, and disposal of personal health and religious information collected and maintained by the Agency.

DATES: This new system will be effective upon publication. New or modified routine uses will be effective February 10, 2022. Submit comments on or before February 10, 2022.

ADDRESSES: You may send comments by any of the following methods:

- *Federal eRulemaking Portal: https://www.regulations.gov.* Follow the instructions for sending comments.
- *Email: sheila.stokes@csosa.gov.*
- *U.S. Mail or Hand-Delivery:* Office of General Counsel, 800 North Capitol Street NW, Suite 702, Washington, DC 20001.

Instructions: All submissions received must include the agency name. All comments received will be posted without change to *http://www.regulations.gov,* including any personal information provided.

Docket: For access to the docket to read background documents or comments received, go to *http://www.regulations.gov.*

FOR FURTHER INFORMATION CONTACT: Sheila Stokes, Senior Agency Official for Privacy, 800 North Capitol Street NW, 7th Floor, Washington, DC 20002, *sheila.stokes@csosa.gov* or phone number (202) 220–5797.

SUPPLEMENTARY INFORMATION:

I. Background

CSOSA maintains the ''Personal Health and Religious Information'' system of records. CSOSA is committed to providing all staff (political appointees, employees, detailees, contractors, consultants, interns, applicants, and volunteers), visitors, and occupants of its facilities with a safe and healthy environment. To ensure and maintain the safety of all occupants during standard operations and public health emergencies or similar health and safety incidents, such as a pandemic, epidemic, or man-made emergency, CSOSA may develop and institute additional safety measures that

require the collection of personal health information. CSOSA is also committed to providing reasonable accommodation for disability (medical) to qualified CSOSA and Pretrial Services Agency (PSA) staff and applicants and religious exceptions to qualified CSOSA staff and applicants pursuant to Section 501 of the Rehabilitation Act of 1973, as amended and Title VII of the Civil Rights Act of 1964, unless doing so would cause undue hardship. CSOSA is also committed to complying with Executive 14043, *Requiring Coronavirus Disease 2019 Vaccination for Federal Employees (Sept. 9, 2021),* which requires Federal agencies to collect staff health information related to the Coronavirus 2019 (hereafter ''COVID–19). CSOSA may develop and institute additional measures that require the collection of personal health information.

CSOSA will collect reasonable accommodation requests for disability (or medical) for CSOSA and the PSA staff (including political appointees, employees, applicants, detailees, contractors, consultants, interns, and volunteers) and religious exceptions for CSOSA staff (including political appointees, employees, detailees, contractors, consultants, interns, applicants, and volunteers).[1] In response to public health emergencies, such as a pandemic or epidemic, CSOSA may collect health related information (including but not limited to vaccination status and proof of vaccination status) for CSOSA staff (including political appointees, employees, detailees, contractors, consultants, interns, applicants, and volunteers) necessary to ensure a safe and healthy environment.

CSOSA is also committed to complying with the law, rules, and regulations associated with collecting personal health information related to (including but not limited to) Executive Order 12564, Drug Free Federal Workplace (Sept. 15, 1986), Occupational Safety and Health Administration (OSHA) compliance, Office of Workers' Compensation Programs (OWCP) claims, leave administration, disability retirement, medically-related decisions such as fitness-for-duty decisions, and health and wellness programs.

Information will be collected, maintained, and disclosed in accordance with applicable law, regulations, and statutes, including, but not limited to, the Privacy Act of 1974, the Rehabilitation Act of 1973, the Genetic Information Nondiscrimination Act of 2008, Title VII of the Civil Rights Act of 1964, the Executive Order 14043, *Requiring Coronavirus Disease 2019 Vaccination for Federal Employees (Sept. 9, 2021)* and regulations and guidance published by the U.S. Occupational Safety and Health Administration, the U.S. Equal Employment Opportunity Commission, the U.S. Department of Labor, and the U.S. Centers for Disease Control and Prevention, the Office of Management and Budget, Safer Federal Workforce Taskforce, or other relevant entities. This newly established system will be included in the CSOSA inventory of record systems.

II. Privacy Act

The Privacy Act of 1974, as amended, embodies fair information practice principles in a statutory framework governing the means by which Federal agencies collect, maintain, use, and disseminate individuals' records. The Privacy Act applies to records about individuals that are maintained in a ''system of records.'' A ''system of records'' is a group of any records under the control of an agency from which information is retrieved by the name of an individual or by some identifying number, symbol, or other identifying particular assigned to the individual. The Privacy Act defines an individual as a United States citizen or lawful permanent resident. Individuals may request access to their own records that are maintained in a system of records in the possession or under the control of CSOSA by complying with Privacy Act regulations at 43 CFR part 2, subpart K, and following the procedures outlined in the Records Access, Contesting Record, and Notification Procedures sections of this notice.

The Privacy Act requires each agency to publish in the **Federal Register** a description denoting the existence and character of each system of records that the agency maintains and the routine uses of each system. The ''Personal Health and Religious Information'' system of records notice is published in its entirety below. In accordance with 5 U.S.C. 552a(r), CSOSA has provided a report of this system of records to the Office of Management and Budget and to Congress.

III. Public Participation

You should be aware your entire comment including your personally identifiable information, such as your address, phone number, email address, or any other personal information in your comment, may be made publicly available at any time. While you may request to withhold your personally identifiable information from public review, we cannot guarantee we will be able to do so.

SYSTEM NAME:

CSOSA, Personal Health and Religious Information.

SECURITY CLASSIFICATION:

Unclassified.

SYSTEM LOCATION:

This system is maintained by the Court Services and Offender Supervisor Agency at 800 North Capitol Street NW, 7th Floor, Washington, DC 20002.

SYSTEM MANAGER(S) AND ADDRESS:

The system manager is the Office of Information Technology located at 800 North Capitol Street, 6th Floor NW, Washington, DC 20002.

AUTHORITY FOR MAINTENANCE OF THE SYSTEM:

The authority to collect this information derives from section 501 of the Rehabilitation Act of 1973, as amended. The substantive standards of the Americans with Disabilities Act of 1990, as amended (42 U.S.C. 12101 *et seq.*) apply to the Federal Government through the Rehabilitation Act. (29 U.S.C. 791 *et seq.*). Additional authority is derived from title VII of the Civil Rights Act of 1964. Additional authority is derived from 5 U.S.C. chapters 11 and 79, and in discharging the functions directed under Executive Order 14043, *Requiring Coronavirus Disease 2019 Vaccination for Federal Employees (Sept. 9, 2021),* we are authorized to collect this information. The authority for the system of records notice (SORN) associated with this collection of information, also includes 5 U.S.C. chapters 33 and 63 and Executive Order 12196, Occupational Safety and Health Program for Federal Employees (Feb. 26, 1980). U.S.C. chapters 11 and 79, and in discharging the functions directed under Executive Order 14043, *Requiring Coronavirus Disease 2019 Vaccination for Federal Employees (Sept. 9, 2021),* Reg. 74815 (Nov. 30, 2015); 5 U.S.C. chapters 33 and 63; Executive Order 12196, Occupational Safety and Health Program for Federal Employees (Feb. 26, 1980).

PURPOSE(S) OF THE SYSTEM:

The primary purpose of the system is to collect, maintain, use, and disseminate personal health and religious information collected by the Agency. Records in this system of records are maintained for a variety of purposes, which include the following:

[1] Pretrial Services Agency's religious exceptions and accommodations will be covered by a separate SORN.

(a) To ensure that records required to be retained on a long-term basis to meet the mandates of law, Executive Order, or regulations (*e.g.,* the Department of Labor's Occupational Safety and Health Administration (OSHA) and OWCP regulations), are so maintained;

(b) To comply with the Rehabilitation Action of 1973, as amended and Title VII of the Civil Rights Act of 1964 in processing reasonable accommodation requests based on disability (medical) or religious exception;

(c) To comply with Executive Order 14043, *Requiring Coronavirus Disease 2019 Vaccination for Federal Employees (Sept. 9, 2021),* and applicable implementation guidance to determine the appropriate health and safety protocols for employees related to the COVID–19;

(d) To comply with Executive Order 12564, *Drug Free Federal Workplace (Sept. 15, 1986),* and applicable guidance to ensure the proper and accurate operation of the agency's employee drug testing program.

(e) To comply with the Occupational Safety and Health Administration (OSHA) laws, rules, regulations, and associated requirements related to employee's reporting of on-the-job injuries and/or unhealthy or unsafe working conditions, including the reporting of such conditions to OSHA and actions taken by that agency and to provide a method for evaluating quality of health care rendered and job-health-protection including engineering protection provided, protective equipment worn, workplace monitoring, and medical exam monitoring required by OSHA or by good practice.

(f) To comply with the law, rules, regulations, and associated requirements related to claims filed the U.S. Department of Labor's Office of Workers' Compensation Programs (OWCP);

(g) To comply with the laws, rules, regulations, and associated requirements related to disability retirement claims, leave administration (including but not limited to sick leave, extended sick leave, the Voluntary Annual Leave Program, Family Medical Leave Act (FMLA), or COVID-related leave), and/or to ensure that all relevant, necessary, accurate, and timely data are available to support any medically-related employment decisions affecting the subject of the records (*e.g.,* in connection with fitness-for-duty and disability retirement decisions).

(h) To enable evaluation of the effectiveness of employee health and wellness programs.

The system enables CSOSA to electronically log, track, and manage personal health and religious information.

CATEGORIES OF INDIVIDUALS COVERED BY THE SYSTEM:

Individuals covered include but are not limited to CSOSA and PSA political appointees, employees, detailees, contractors, consultants, interns, applicants, and volunteers, or any family member, health professional, or other person making a request as a representative of the same.

CATEGORIES OF RECORDS IN THE SYSTEM:

The personal health and information records may contain some or all of the following records: Reasonable accommodation requests, including medical records, notes, religious affiliation, or records made during consideration of requests, and decisions on requests. These records may contain general personal data, including but not limited to the political appointee's, employee's, detailee's, contractor's, consultant's, intern's, applicant's, and volunteer's name, date of birth, social security number, religion, maiden name, place of birth, financial information, alias, home address, medical information, gender, telephone number, military service, age, email address, physical characteristics, race/ethnicity, and/or education. These records may also contain work-related data, including but not limited to occupation, telephone number, salary, job title, email address, work history, work address, business associates, and/or program office to which the employee is assigned. Additional records maintained in this system may include:

a. Medical records, forms, and reports completed or obtained when an individual applies for a Federal job and is subsequently employed;

b. Medical records, forms, and reports completed during employment as a condition of employment, either by the employing agency or by another agency, State or local government entity, or a private sector entity under contract to the employing agency;

c. Records pertaining and resulting from the testing of the employee for use of illegal drugs under Executive Order 12564. Such records may be retained by the agency (*e.g.,* by the agency Medical Review Official) or by a contractor laboratory. This includes records of negative results, confirmed or unconfirmed positive test results, and documents related to the reasons for testing or other aspects of test results.

d. Reports of on-the-job injuries and medical records, forms, and reports generated as a result of the filing of a claim for Workers' Compensation, whether the claim is accepted or not. (The official OWCP claim file is not covered by this system; rather, it is part of the Department of Labor's Office of Workers' Compensation Program (OWCP) system of records.)

e. All other medical records, forms, and reports created on an employee during his/her period of employment, including any retained on a temporary basis (*e.g.,* those designated to be retained only during the period of service with a given agency) and those designated for long-term retention (*i.e.,* those retained for the entire duration of Federal service and for some period of time after).

f. Records resulting from participation in agency-sponsored health promotion and wellness activities, including health risk appraisals, biometric testing, health coaching, disease management, behavioral management, preventive services, fitness programs, and any other activities that could be considered part of a comprehensive worksite health and wellness program.

RECORD SOURCE CATEGORIES:

Records in this system are obtained directly from the political appointee, employee, detailee, contractor, consultant, intern, applicant, and volunteer, or any family member, health professional, or other person making such a request as a representative of the same; therefore, the accuracy is ensured by collecting the information from the source who may be required to certify under penalty of perjury that the information is true and accurate to the best of their knowledge.

ROUTINE USES OF RECORDS MAINTAINED IN THE SYSTEM INCLUDING CATEGORIES OF USERS AND THE PURPOSES OF SUCH USES:

In addition to those disclosures generally permitted under 5 U.S.C. 552a(b) of the Privacy Act, all or a portion of the records or information contained in this system may be disclosed outside CSOSA as a routine use pursuant to 5 U.S.C. 552a(b)(3) as follows:

A. To Members of Congress or their staff on behalf of and at the request of the individuals who is the subject of the record or at the request of or on behalf of their constituents.

B. To another Federal agency or a party in litigation before a court or in an administrative proceeding being conducted by a Federal agency, when the Government is a party to the judicial or administrative proceeding, and such information is the subject of a court order directing disclosure or deemed by CSOSA to be relevant and necessary to the litigation.

C. At the initiative of CSOSA, to a law enforcement agency under the control of the United States for investigation or prosecution where a record indicates a violation or suspected violation of law.

D. By the National Archives and Records Administration (NARA) in records management and inspections under the authority of 44 U.S.C. 2904 and 2906.

E. To disclose information to the Department of Justice or in a proceeding before a court, adjudicative body, or other administrative body before which CSOSA is authorized to appear when:

(1) CSOSA, or any component thereof; or

(2) Any employee of CSOSA in his or her official capacity; or

(3) Any employee of CSOSA in his or her individual capacity where the Department of Justice or CSOSA has agreed to represent the employee; or

(4) Any employee of CSOSA in his or her individual capacity where CSOSA has agreed to represent the employee; or

(5) The United States, where the CSOSA determines that litigation is likely to affect the agency or any of its components, is a party to litigation or has an interest in such litigation, and the use of such records by the Department of Justice or CSOSA is deemed by CSOSA to be relevant and necessary to the litigation.

F. To disclose information to officials of the Merit Systems Protection Board or the Office of the Special Counsel, when requested in connection with appeals, special studies of the civil service and other merit systems, review of OPM rules and regulations, investigations of alleged or possible prohibited personnel practices, and such other functions as promulgated in 5 U.S.C. 1205 and 1206, or as may be authorized by law.

G. To disclose information to the U.S. Equal Employment Opportunity Commission when requested in connection with investigations into alleged or possible discrimination practices in the Federal sector, examination of Federal affirmative employment programs, compliance by Federal agencies with the Uniform Guidelines of Employee Selection Procedures, or other functions vested in the Commission.

H. To disclose information to the Federal Labor Relations Authority or its General Counsel when requested in connection with investigations of allegations of unfair labor practices of matters before the Federal Service Impasses Panel.

I. To disclose information to the Office of Management and Budget at any stage of the legislative coordination and clearance process in connection with private relief legislation as set forth in OMB circular No. A–19.

J. To authorized contractors, vendors, grantees, or volunteers performing or working on a contract, service, grant, cooperative agreement, or job for CSOSA or the Federal government that is in the performance of a Federal duty to which the information is deemed relevant.

K. To disclose to a requesting Federal agency, information in connection with the hiring, retention, separation, or retirement of an employee; the issuance of a security clearance; the reporting of an investigation of an employee; the letting of a contract; the classification of a job; or the issuance of a license, grant, or other benefit by the requesting agency, to the extent that CSOSA determines that the information is relevant and necessary to the requesting party's decision on the matter.

L. To an appeal, grievance, hearing, or complaints examiner; an equal opportunity investigator, arbitrator, or mediator; and an exclusive representative or other person authorized to investigate or settle a grievance, complaint, or appeal filed by an individual who is the subject of the record.

M. For Data Breach and Mitigation Response to provide information to appropriate agencies, entities, and persons when;

(1) CSOSA suspects or has confirmed that there has been a breach of the system of records; (2) CSOSA has determined that as a result of the suspected or confirmed breach there is a risk of harm to individuals, CSOSA (including its information systems, programs, and operations), the Federal Government, or national security; and (3) the disclosure made to such agencies, entities, and persons is reasonably necessary to assist in connection with CSOSA's efforts to respond to the suspected or confirmed breach or to prevent, minimize, or remedy such harm.

N. To provide information to another Federal agency or Federal entity, when CSOSA determines that information from this system of records is reasonably necessary to assist the recipient agency or entity in (1) responding to a suspected or confirmed breach, or (2) preventing, minimizing, or remedying the risk of harm to individuals, the recipient agency or entity (including its information systems, programs and operations), the Federal Government, or national security, resulting from a suspected or confirmed breach.

DISCLOSURE TO CONSUMER REPORTING AGENCIES:

None.

POLICIES AND PRACTICES FOR STORAGE OF RECORDS:

Records in this system of records are stored electronically or on paper in secure facilities. Electronic records are stored on CSOSA's secure network or cloud-based software using the Federal Risk and Authorization Management Program (FedRAMP) approved platform.

POLICIES AND PRACTICES FOR RETRIEVAL OF RECORDS:

Information covered by this system of records notice may be retrieved by the name of the individual.

POLICIES AND PRACTICES FOR RETENTION AND DISPOSAL OF RECORDS:

a. *Medical Qualification and Eligibility Determination Records.* Temporary. Destroy immediately after final determination has been issued. This disposition instruction is mandatory; deviations are not allowed.

b. *Occupational Individual Medical Case Files.* Temporary: Destroy 30 Years after employee separation or when the Official Personnel Folder is destroyed, whichever is longer.

c. *Non-Occupational Individual Medical Case Files.* Temporary: Destroy 10 Years after the most recent encounter, but longer retention is authorized if needed for business use.

d. *Employees Drug Test Plans, Procedures and Scheduling Records.* Temporary. Destroy when 3 years old or when superseded or obsolete.

e. *Employees Drug Test Results. (Positive).* Temporary. Destroy when the employee leaves the agency or when 3 years old, whichever is longer.

f. *Employees Drug Test Results. (Negative).* Temporary. Destroy when 3 years old.

g. *Workers Compensation Records.* Temporary: Destroy 3 years after compensation ceases or when deadline for filing a claim has passed.

h. *Non-Occupational Health and Wellness Program Records.* Temporary: Destroy 3 Years after the project/activity/or transaction is completed or superseded, but longer retention is authorized if needed for business use.

i. *Reasonable Accommodation Case Files.* Temporary. Destroy 3 years after employee separation from the agency or all appeals are concluded whichever is later, but longer retention is authorized if required for business use.

ADMINISTRATIVE, TECHNICAL AND PHYSICAL SAFEGUARDS:

Records are protected from unauthorized access and improper use

through administrative, technical, and physical security measures. Technical security safeguards within CSOSA include restrictions on computer access to authorized individuals who have a legitimate need to know the information; required use of strong passwords that are frequently changed; multi-factor authentication for remote access and access to many CSOSA network components; use of encryption for certain data types and transfers; firewalls and intrusion detection applications; and regular review of security procedures and best practices to enhance security. Physical safeguards include restrictions on building access to authorized individuals, security guard service, and maintenance of records in lockable offices and filing cabinets. Describe the administrative, technical, and physical safeguards, *e.g.,* locked cabinets, locked rooms, passwords, audit trail, electronic data encryption, security, privacy and record management training that are in place to ensure the records are not accessed, used or disclosed in an unauthorized manner.

RECORD ACCESS PROCEDURES:

Individuals requesting access to their individual records should send a signed, written inquiry to the System Manager identified above.

CONTESTING RECORD PROCEDURES:

Individuals contesting the content of records about themselves contained in this system of records should follow the Notification Procedure below.

NOTIFICATION PROCEDURES:

Individuals requesting notification of the existence of records on themselves or requesting access to their individual records must send a signed, written inquiry to Sheila Stokes, Senior Agency Official for Privacy, 800 North Capitol Street NW, 7th Floor, Washington, DC 20002, *sheila.stokes@csosa.gov* or phone number (202) 220–5797. The request envelope (or subject line) and letter should both be clearly marked ''PRIVACY ACT INQUIRY.'' A request for notification must meet the requirements of 43 CFR 2.235.

EXEMPTIONS PROMULGATED FOR THE SYSTEM:

None.

HISTORY:

None.

Sheila Stokes,

General Counsel.

[FR Doc. 2021–28122 Filed 1–10–22; 8:45 am]

BILLING CODE 3129–04–P

DEPARTMENT OF EDUCATION

Submission of Data by State Educational Agencies; Submission Dates for State Revenue and Expenditure Reports for Fiscal Year 2021, Revisions to Those Reports, and Revisions to Prior Fiscal Year Reports

AGENCY: National Center for Education Statistics, Institute of Education Sciences, Department of Education.

ACTION: Notice.

SUMMARY: The Secretary announces dates for State educational agencies (SEAs) to submit expenditure and revenue data and average daily attendance statistics on ED Form 2447 (the National Public Education Financial Survey (NPEFS)) for fiscal year (FY) 2021, revisions to those reports, and revisions to reports for previous fiscal years. The Secretary sets these dates to ensure that data are available to serve as the basis for timely distribution of Federal funds. The U.S. Census Bureau is the data collection agent for this request of the Department of Education's National Center for Education Statistics (NCES). The data will be published by NCES and will be used by the Secretary in the calculation of allocations for FY 2023 appropriated funds.

DATES: SEAs can begin submitting data for FY 2021 and revisions to previously submitted data for FY 2020 on Monday, January 31, 2022. SEAs are urged to submit accurate and complete data by Friday, March 25, 2022, to facilitate timely processing. The deadline for the final submission of all data, including any revisions to previously submitted data for FY 2020 and FY 2021, is Monday, August 15, 2022. Any resubmissions of FY 2020 or FY 2021 data by SEAs in response to requests for clarification, reconciliation, or other inquiries by NCES or the Census Bureau must be completed as soon as possible, but no later than Tuesday, September 6, 2022. All outstanding data issues must be reconciled or resolved by the SEAs, NCES, and the Census Bureau as soon as possible, but no later than September 6, 2022.

Submission Information: SEAs are encouraged to submit data online using the interactive survey form on the NPEFS data collection website at: *https://surveys.nces.ed.gov/ccdnpefs.* The NPEFS interactive survey includes a digital confirmation page where a personal identification number (PIN) may be entered. A successful entry of the PIN serves as a signature by the authorizing official. Alternatively, a certification form also may be printed from the website, signed by the authorizing official, and mailed to the Economic Reimbursable Surveys Division of the Census Bureau at the Washington, DC, address provided above, within five business days after submission of the NPEFS web interactive form.

SEAs may mail ED Form 2447 to: U.S. Census Bureau, ATTENTION: Economic Reimbursable Surveys Division, 4600 Silver Hill Road, Suitland, MD 20746.

If an SEA's submission is received by the Census Bureau after August 15, 2022, the SEA must show one of the following as proof that the submission was mailed on or before that date:

1. A legibly dated U.S. Postal Service postmark.
2. A legible mail receipt with the date of mailing stamped by the U.S. Postal Service.
3. A dated shipping label, invoice, or receipt from a commercial carrier.
4. Any other proof of mailing acceptable to the Secretary.

If the SEA mails ED Form 2447 through the U.S. Postal Service, the Secretary does not accept either of the following as proof of mailing:

1. A private metered postmark.
2. A mail receipt that is not dated by the U.S. Postal Service.

Note: The U.S. Postal Service does not uniformly provide a dated postmark. Before relying on this method, an SEA should check with its local post office.

FOR FURTHER INFORMATION CONTACT: Stephen Q. Cornman, Senior Survey Director, Financial Surveys, National Center for Education Statistics, Institute of Education Sciences, U.S. Department of Education, 550 12th Street SW, Washington, DC 20202. Telephone: (202) 245–7753. Email: *stephen.cornman@ed.gov.* You may also contact an NPEFS team member at the Census Bureau. Telephone: 1–800–437–4196 or (301) 763–1571. Email: *erd.npefs.list@census.gov.*

If you use a telecommunications device for the deaf (TDD) or a text telephone (TTY), call the Federal Relay Service, toll free, at 1–800–877–8339.

SUPPLEMENTARY INFORMATION: Under section 153(a)(1)(I) of the Education Sciences Reform Act of 2002, 20 U.S.C. 9543(a)(1)(I), which authorizes NCES to gather data on the financing and management of education, NCES collects data annually from SEAs through ED Form 2447. The report from SEAs includes attendance, revenue, and expenditure data from which NCES determines a State's ''average per-pupil expenditure'' (SPPE) for elementary and secondary education, as defined in section 8101(2) of the Elementary and

Secondary Education Act of 1965, as amended (ESEA) (20 U.S.C. 7801(2)).

In addition to using the SPPE data as general information on the financing of elementary and secondary education, the Secretary uses these data directly in calculating allocations for certain formula grant programs, including, but not limited to, title I, part A, of the ESEA, Impact Aid, and Indian Education programs. Other programs, such as the Education for Homeless Children and Youth program under title VII of the McKinney-Vento Homeless Assistance Act, and the Student Support and Academic Enrichment Grants under title IV, part A of the ESEA make use of SPPE data indirectly because their formulas are based, in whole or in part, on State title I, part A, allocations.

In January 2022, the Census Bureau, acting as the data collection agent for NCES, will email ED Form 2447 to SEAs, with instructions, and will request that SEAs commence submitting FY 2021 data to the Census Bureau on Monday, January 31, 2022. SEAs are urged to submit accurate and complete data by Friday, March 25, 2022, to facilitate timely processing.

Submissions by SEAs to the Census Bureau will be analyzed for accuracy and returned to each SEA for verification. SEAs must submit all data, including any revisions to FY 2020 and FY 2021 data, to the Census Bureau no later than Monday, August 15, 2022. Any resubmissions of FY 2020 or FY 2021 data by SEAs in response to requests for clarification or reconciliation or other inquiries by NCES or the Census Bureau must be completed by Tuesday, September 6, 2022. Between August 15, 2022, and September 6, 2022, SEAs may also, on their own initiative, resubmit data to resolve issues not addressed in their NPEFS data submitted by August 15, 2022. All outstanding data issues must be reconciled or resolved by the SEAs, NCES, and the Census Bureau as soon as possible, but no later than September 6, 2022.

In order to facilitate timely submission of data, the Census Bureau will send reminder notices to SEAs in June and July of 2022.

Having accurate, consistent, and timely information is critical to an efficient and fair Department of Education (Department) allocation process and to the NCES statistical process. The Department establishes Monday, August 15, 2022, as the date by which SEAs must submit data using either the interactive survey form on the NPEFS data collection website at *https://surveys.nces.ed.gov/ccdnpefs/* or ED Form 2447. This date is established to ensure that the best, most accurate data will be available to support timely distribution of Federal education funds.

Any resubmissions of FY 2020 or FY 2021 data by SEAs in response to requests for clarification or reconciliation or other inquiries by NCES or the Census Bureau must be completed through the interactive survey form on the NPEFS data collection website or ED Form 2447 by Tuesday, September 6, 2022. If an SEA submits revised data after the September 6, 2022, deadline that result in a lower SPPE figure, the SEA's allocations may be adjusted downward, or the Department may direct the SEA to return funds.

Note: The following are important dates in the data collection process for FY 2021 data and revisions to reports for previous fiscal years:

Date	Activity
January 31, 2022	SEAs can begin to submit data for FY 2021 and revisions to previously submitted data for FY 2020.
March 25, 2022	Date by which SEAs are urged to submit accurate and complete data for FY 2021 and FY 2020.
August 15, 2022	Mandatory final submission date for FY 2021 and FY 2020 data to be used for program funding allocation purposes.
September 6, 2022	Mandatory final deadline for responses by SEAs to requests for clarification or reconciliation or other inquiries by NCES or the Census Bureau. Between August 15, 2022, and September 6, 2022, SEAs may also, on their own initiative, resubmit data to resolve issues not addressed in their NPEFS data submitted by August 15, 2022. By September 6, 2022, all data issues must be resolved.

Accessible Format: On request to the program contact person listed under **FOR FURTHER INFORMATION CONTACT**, individuals with disabilities can obtain this document in an accessible format. The Department will provide the requestor with an accessible format that may include Rich Text Format (RTF) or text format (txt), a thumb drive, an MP3 file, braille, large print, audiotape, or compact disc, or other accessible format.

Electronic Access to This Document: The official version of this document is the document published in the **Federal Register**. You may access the official edition of the **Federal Register** and the Code of Federal Regulations at *www.govinfo.gov.* At this site you can view this document, as well as all other documents of this Department published in the **Federal Register**, in text or Portable Document Format (PDF). To use PDF you must have Adobe Acrobat Reader, which is available free at the site.

You may also access documents of the Department published in the **Federal Register** by using the article search feature at *www.federalregister.gov.* Specifically, through the advanced search feature at this site, you can limit your search to documents published by the Department.

Authority: 20 U.S.C. 9543.

Mark Schneider,

Director, Institute of Education Sciences.

[FR Doc. 2022–00309 Filed 1–10–22; 8:45 am]

BILLING CODE 4000–01–P

DEPARTMENT OF ENERGY

Environmental Management Site-Specific Advisory Board, Oak Ridge

AGENCY: Office of Environmental Management, Department of Energy.

ACTION: Notice of open virtual meeting.

SUMMARY: This notice announces an online virtual meeting of the Environmental Management Site-Specific Advisory Board (EM SSAB), Oak Ridge. The Federal Advisory Committee Act requires that public notice of this online meeting be announced in the **Federal Register**.

DATES: Wednesday, February 9, 2022; 6:00 p.m.–7:30 p.m.

ADDRESSES: Online Virtual Meeting. To attend, please send an email to: *orssab@orem.doe.gov* by no later than 5:00 p.m. EST on Wednesday, February 2, 2022.

FOR FURTHER INFORMATION CONTACT: Melyssa P. Noe, Alternate Deputy Designated Federal Officer, U.S. Department of Energy (DOE), Oak Ridge Office of Environmental Management (OREM), P.O. Box 2001, EM–942, Oak Ridge, TN 37831; Phone (865) 241–3315; or E-Mail: *Melyssa.Noe@orem.doe.gov.* Or visit the website at *https://www.energy.gov/orem/services/*

community-engagement/oak-ridge-site-specific-advisory-board.

SUPPLEMENTARY INFORMATION:

Purpose of the Board: The purpose of the Board is to make recommendations to DOE–EM and site management in the areas of environmental restoration, waste management, and related activities.

Tentative Agenda:

- Comments from the Deputy Designated Federal Officer (DDFO)
- Comments from the DOE, Tennessee Department of Environment and Conservation, and Environmental Protection Agency Liaisons
- Presentation: Overview of Federal Advisory Committee Act
- Public Comment Period
- Motions/Approval of June 6, 2021 Meeting Minutes
- Status of Outstanding Recommendations
- Alternate DDFO Report
- Committee Reports

Public Participation: The online meeting is open to the public. Written statements may be filed with the Board via email either before or after the meeting as there will not be opportunities for live public comment during this online virtual meeting. Public comments received by no later than 5:00 p.m. EST on Wednesday, February 2, 2022, will be read aloud during the virtual meeting. Comments will be accepted after the meeting, by no later than 5:00 p.m. EST on Monday, February 14, 2022. Please submit comments to *orssab@orem.doe.gov.* The Deputy Designated Federal Officer is empowered to conduct the meeting in a fashion that will facilitate the orderly conduct of business. Individuals wishing to submit public comments should email them as directed above.

Minutes: Minutes will be available by emailing or calling Melyssa P. Noe at the email address and telephone number listed above. Minutes will also be available at the following website: *https://www.energy.gov/orem/listings/oak-ridge-site-specific-advisory-board-meetings.*

Signed in Washington, DC, on January 6, 2022.

LaTanya Butler,

Deputy Committee Management Officer.

[FR Doc. 2022–00331 Filed 1–10–22; 8:45 am]

BILLING CODE 6450–01–P

FEDERAL DEPOSIT INSURANCE CORPORATION

RIN 3064–ZA29

Notice of Inflation Adjustments for Civil Money Penalties

AGENCY: Federal Deposit Insurance Corporation.

ACTION: Notice of monetary penalties 2022.

SUMMARY: The Federal Deposit Insurance Corporation is providing notice of its maximum civil money penalties as adjusted for inflation.

DATES: The adjusted maximum amounts of civil money penalties in this notice are applicable to penalties assessed after January 15, 2022, for conduct occurring on or after November 2, 2015.

FOR FURTHER INFORMATION CONTACT: Graham N. Rehrig, Senior Attorney, Legal Division, (703) 314–3401, *grehrig@fdic.gov;* Federal Deposit Insurance Corporation, 550 17th Street NW, Washington, DC 20429.

SUPPLEMENTARY INFORMATION: This notice announces changes to the maximum amount of each civil money penalty (CMP) within the Federal Deposit Insurance Corporation's (FDIC) jurisdiction to administer to account for inflation under the Federal Civil Penalties Inflation Adjustment Act of 1990 (1990 Adjustment Act),[1] as amended by the Federal Civil Penalties Inflation Adjustment Act Improvements Act of 2015 (2015 Adjustment Act).[2] Under the 1990 Adjustment Act, as amended, federal agencies must make annual adjustments to the maximum amount of each CMP the agency administers. The Office of Management and Budget (OMB) is required to issue guidance to federal agencies no later than December 15 of each year providing an inflation-adjustment multiplier (*i.e.,* the inflation-adjustment factor agencies must use) applicable to CMPs assessed in the following year.

Agencies are required to publish their CMPs, adjusted under the multiplier provided by the OMB, by January 15 of the applicable year. Agencies, like the FDIC, that have codified the statutory formula for making the CMP adjustments may make annual inflation adjustments by providing notice in the **Federal Register**.[3]

On December 15, 2021, the OMB issued guidance to affected agencies on implementing the required annual adjustment, which guidance included the relevant inflation multiplier.[4] The FDIC has applied that multiplier to the maximum CMPs allowable in 2021 for FDIC-supervised institutions to calculate the maximum amount of CMPs that may be assessed by the FDIC in 2022.[5] There were no new statutory CMPs administered by the FDIC during 2021.

The following charts provide the inflation-adjusted maximum CMP amounts for use after January 15, 2022—the effective date of the 2022 annual adjustments—under 12 CFR part 308, for conduct occurring on or after November 2, 2015:

MAXIMUM CIVIL MONEY PENALTY AMOUNTS

U.S. code citation	Current maximum CMP (through January 14, 2022)	Adjusted maximum CMP[6] (beginning January 15, 2022)
12 U.S.C. 1464(v):		
Tier One CMP[7]	$4,146	$4,404
Tier Two CMP	41,463	44,043
Tier Three CMP[8]	2,073,133	2,202,123
12 U.S.C. 1467(d)	10,366	11,011
12 U.S.C. 1817(a):		
Tier One CMP[9]	4,146	4,404

[1] Public Law 101–410, 104 Stat. 890, codified at 28 U.S.C. 2461 note.

[2] Public Law 114–74, sec. 701(b), 129 Stat. 599, codified at 28 U.S.C. 2461 note.

[3] *See* Office of Mgmt. & Budget, Exec. Office of the President, OMB Memorandum No. M–22–07, *Implementation of Penalty Inflation Adjustments for 2022, Pursuant to the Federal Civil Penalties Inflation Adjustment Act Improvements Act of 2015* 4 (Dec. 15, 2021), *https://www.whitehouse.gov/wp-content/uploads/2021/12/M-22-07.pdf* (''OMB Guidance''); *see also* 12 CFR 308.132(d) (FDIC regulation that guides readers to the **Federal Register** to see the annual notice of CMP inflation adjustments).

[4] *See* OMB Guidance at 1 (providing an inflation multiplier of 1.06222).

[5] Penalties assessed for violations occurring prior to November 2, 2015, will be subject to the maximum amounts set forth in the FDIC's regulations in effect prior to the enactment of the 2015 Adjustment Act.

MAXIMUM CIVIL MONEY PENALTY AMOUNTS—Continued

U.S. code citation	Current maximum CMP (through January 14, 2022)	Adjusted maximum CMP [6] (beginning January 15, 2022)
Tier Two CMP	41,463	44,043
Tier Three CMP [10]	2,073,133	2,202,123
12 U.S.C. 1817(c):		
Tier One CMP	3,791	4,027
Tier Two CMP	37,901	40,259
Tier Three CMP [11]	1,895,095	2,013,008
12 U.S.C. 1817(j)(16):		
Tier One CMP	10,366	11,011
Tier Two CMP	51,827	55,052
Tier Three CMP [12]	2,073,133	2,202,123
12 U.S.C. 1818(i)(2): [13]		
Tier One CMP	10,366	11,011
Tier Two CMP	51,827	55,052
Tier Three CMP [14]	2,073,133	2,202,123
12 U.S.C. 1820(e)(4)	9,476	10,066
12 U.S.C. 1820(k)(6)	341,000	362,217
12 U.S.C. 1828(a)(3)	129	137
12 U.S.C. 1828(h): [15]		
For assessments < $10,000	129	137
12 U.S.C. 1829b(j)	21,663	23,011
12 U.S.C. 1832(c)	3,011	3,198
12 U.S.C. 1884	301	320
12 U.S.C. 1972(2)(F):		
Tier One CMP	10,366	11,011
Tier Two CMP	51,827	55,052
Tier Three CMP [16]	2,073,133	2,202,123
12 U.S.C. 3909(d)	2,579	2,739
15 U.S.C. 78u–2:		
Tier One CMP (individuals)	9,753	10,360
Tier One CMP (others)	97,523	103,591
Tier Two CMP (individuals)	97,523	103,591
Tier Two CMP (others)	487,616	517,955
Tier Three CMP (individuals)	195,047	207,183
Tier Three CMP (others)	975,230	1,035,909
15 U.S.C. 1639e(k):		
First violation	11,906	12,647
Subsequent violations	23,811	25,293
31 U.S.C. 3802	11,803	12,537
42 U.S.C. 4012a(f)	2,252	2,392

[6] The maximum penalty amount is per day, unless otherwise indicated.

[7] 12 U.S.C. 1464(v) provides the maximum CMP amounts for the late filing of certain Call Reports. In 2012, however, the FDIC issued regulations that further subdivided these amounts based upon the size of the institution and the lateness of the filing. *See* 77 FR 74573, 74576–78 (Dec. 17, 2012), codified at 12 CFR 308.132(e)(1). These adjusted subdivided amounts are found at the end of this chart.

[8] The maximum penalty amount for an institution is the lesser of this amount or 1 percent of total assets.

[9] 12 U.S.C. 1817(a) provides the maximum CMP amounts for the late filing of certain Call Reports. In 1991, however, the FDIC issued regulations that further subdivided these amounts based upon the size of the institution and the lateness of the filing. *See* 56 FR 37968, 37992–93 (Aug. 9, 1991), codified at 12 CFR 308.132(e)(1). These adjusted subdivided amounts are found at the end of this chart.

[10] The maximum penalty amount for an institution is the lesser of this amount or 1 percent of total assets.

[11] The maximum penalty amount for an institution is the lesser of this amount or 1 percent of total assets.

[12] The maximum penalty amount for an institution is the lesser of this amount or 1 percent of total assets.

[13] These amounts also apply to CMPs in statutes that cross-reference 12 U.S.C. 1818, such as 12 U.S.C. 2601, 2804(b), 3108(b), 3349(b), 4009(a), 4309(a), 4717(b); 15 U.S.C. 1607(a), 1681s(b), 1691(b), 1691c(a), 1693*o*(a); and 42 U.S.C. 3601.

[14] The maximum penalty amount for an institution is the lesser of this amount or 1 percent of total assets.

[15] The $137-per-day maximum CMP under 12 U.S.C. 1828(h), for failure or refusal to pay any assessment, applies only when the assessment is less than $10,000. When the amount of the assessment is $10,000 or more, the maximum CMP under section 1828(h) is 1 percent of the amount of the assessment for each day that the failure or refusal continues.

[16] The maximum penalty amount for an institution is the lesser of this amount or 1 percent of total assets.

CFR citation	Current presumptive CMP (through January 14, 2022)	Adjusted presumptive CMP (beginning January 15, 2022)
12 CFR 308.132(e)(1)(i):		
Institutions with $25 million or more in assets:		
1 to 15 days late	$569	$604.
16 or more days late	$1,137	$1,208.
Institutions with less than $25 million in assets:		
1 to 15 days late [17]	$190	$202
16 or more days late [18]	$378	$402.

CFR citation	Current presumptive CMP (through January 14, 2022)	Adjusted presumptive CMP (beginning January 15, 2022)
12 CFR 308.132(e)(1)(ii):		
Institutions with $25 million or more in assets:		
1 to 15 days late	$947	$1,006.
16 or more days late	$1,894	$2,012.
Institutions with less than $25 million in assets:		
1 to 15 days late	1/50,000th of the institution's total assets	1/50,000th of the institution's total assets.
16 or more days late	1/25,000th of the institution's total assets	1/25,000th of the institution's total assets.
12 CFR 308.132(e)(2)	$41,463	$44,043.
12 CFR 308.132(e)(3):		
Tier One CMP	$4,146	$4,404.
Tier Two CMP	$41,463	$44,043.
Tier Three CMP [19]	$2,073,133	$2,202,123.

[17] The maximum penalty amount for an institution is the greater of this amount or 1/100,000th of the institution's total assets.
[18] The maximum penalty amount for an institution is the greater of this amount or 1/50,000th of the institution's total assets.
[19] The maximum penalty amount for an institution is the lesser of this amount or 1 percent of total assets.

Federal Deposit Insurance Corporation.

Dated at Washington, DC, on January 5, 2022.

James P. Sheesley,

Assistant Executive Secretary.

[FR Doc. 2022–00286 Filed 1–10–22; 8:45 am]

BILLING CODE 6714–01–P

FEDERAL MARITIME COMMISSION

[Docket No. 22–01]

CCMA, LLC, Complainant v. Safmarine, Inc. and Ports America Chesapeake, LLC, Respondents; Notice of Filing of Complaint and Assignment

Notice is given that a complaint has been filed with the Federal Maritime Commission (Commission) by CCMA, LLC, hereinafter ''Complainant,'' against Safmarine, Inc. and Ports America Chesapeake, LLC, hereinafter ''Respondents.'' Complainant is a Delaware corporation that purchased containers of high carbon ferro for shipment to Baltimore. Complainant alleges that Respondent Safmarine, Inc. is a Delaware corporation and common carrier, and that Respondent Ports America Chesapeake, LLC is a Delaware corporation and a marine terminal operator.

Complainant alleges that Respondents violated 46 U.S.C. 41102(c) and 46 CFR 545.4 and 545.5 with regard to assessing demurrage charges against shipments that are subject to a governmental hold for examination by Customs, and therefore, unavailable for pick-up. The full text of the complaint can be found in the Commission's Electronic Reading Room at *https://www2.fmc.gov/readingroom/proceeding/22-01/.*

This proceeding has been assigned to Office of Administrative Law Judges. The initial decision of the presiding office in this proceeding shall be issued by January 5, 2023, and the final decision of the Commission shall be issued by July 19, 2023.

William Cody,

Secretary.

[FR Doc. 2022–00249 Filed 1–10–22; 8:45 am]

BILLING CODE 6730–02–P

DEPARTMENT OF DEFENSE

GENERAL SERVICES ADMINISTRATION

NATIONAL AERONAUTICS AND SPACE ADMINISTRATION

[OMB Control No. 9000–0066; Docket No. 2022–0053; Sequence No. 2]

Information Collection; Certain Federal Acquisition Regulation Part 22 Labor Requirements

AGENCY: Department of Defense (DOD), General Services Administration (GSA), and National Aeronautics and Space Administration (NASA).

ACTION: Notice and request for comments.

SUMMARY: In accordance with the Paperwork Reduction Act of 1995, and the Office of Management and Budget (OMB) regulations, DoD, GSA, and NASA invite the public to comment on an extension concerning certain Federal Acquisition Regulation (FAR) labor requirements. DoD, GSA, and NASA invite comments on: Whether the proposed collection of information is necessary for the proper performance of the functions of Federal Government acquisitions, including whether the information will have practical utility; the accuracy of the estimate of the burden of the proposed information collection; ways to enhance the quality, utility, and clarity of the information to be collected; and ways to minimize the burden of the information collection on respondents, including the use of automated collection techniques or other forms of information technology. OMB has approved this information collection for use through March 31, 2022. DoD, GSA, and NASA propose that OMB extend its approval for use for three additional years beyond the current expiration date.

DATES: DoD, GSA, and NASA will consider all comments received by March 14, 2022.

ADDRESSES: DoD, GSA, and NASA invite interested persons to submit comments on this collection through *https://www.regulations.gov* and follow the instructions on the site. This website provides the ability to type short comments directly into the comment field or attach a file for lengthier comments. If there are difficulties submitting comments, contact the GSA Regulatory Secretariat Division at 202–501–4755 or *GSARegSec@gsa.gov.*

Instructions: All items submitted must cite OMB Control No. 9000–0066, Certain Federal Acquisition Regulation Part 22 Labor Requirements. Comments received generally will be posted without change to *https://www.regulations.gov,* including any personal and/or business confidential information provided. To confirm receipt of your comment(s), please check *www.regulations.gov,* approximately two to three days after submission to verify posting.

FOR FURTHER INFORMATION CONTACT: Jennifer Hawes, Procurement Analyst, at telephone 202–969–7386, or *jennifer.hawes@gsa.gov.*

SUPPLEMENTARY INFORMATION:

A. OMB Control Number, Title, and Any Associated Form(s)

9000–0066, Certain Federal Acquisition Regulation Part 22 Labor Requirements

B. Need and Uses

This clearance covers the information that offerors and contractors must submit to comply with the following FAR requirements:

• *FAR 52.222–2, Payment for Overtime Premiums.* This clause requires the contractor to request authorization for overtime premiums costs that exceed the amount negotiated in the contract. The request shall include information on the affected work unit current staffing and workload, how a denial of the request would impact performance on the instant contract or other contracts, and reasons why the work cannot be performed by using multishift operations or by employing additional personnel. Contracting officers uses this information to evaluate whether the overtime is necessary.

• *FAR 52.222–6, Construction Wage Rate Requirements, and the Standard Form (SF) 1444.* This clause requires the contractor to establish additional classifications, if any laborer or mechanic is to be employed in a classification that is not listed in the wage determination applicable to the contract. In such cases, the contractor is required to complete and submit an SF 1444, Request for Authorization of Additional Classification and Rate, along with other pertinent data, containing the proposed additional classification and minimum wage rate including any fringe benefits payments. The contracting officer submits the SF 1444 to the DOL Wage and Hour Division with a request for conformance review to determine the appropriateness of the request.

• *FAR 52.222–11, Subcontracts (Labor Standards), and the SF 1413.* This clause requires contractors to submit an SF 1413, Statement and Acknowledgment, for each subcontract for construction within the United States, including the subcontractor's signed and dated acknowledgment that the required labor clauses necessary to implement various labor statutes have been included in the subcontract. Contracting officers review the information on the form to ascertain whether contractors have included the required labor clauses in their subcontracts.

• *FAR 52.222–18, Certification Regarding Knowledge of Child Labor for Listed End Products.* This provision (and its commercial equivalent in the provision at 52.212–3) requires the offeror, as part of its annual representations and certifications, to either certify in paragraph (c)(1) that it will not supply an end product of a type identified on the Department of Labor (DOL) List of Products Requiring Contractor Certification as to Forced or Indentured Child Labor (*https://www.dol.gov/agencies/ilab*), or certify in paragraph (c)(2) that it has made a good faith effort to determine whether such child labor was used to mine, produce, or manufacture such end product, and is unaware of any such use of child labor. This information is used by Government to ensure that a good faith effort has been made to determine whether forced or indentured child labor was used to mine, produce, or manufacture any product on the List furnished under the contract.

• *FAR 52.222–33, Notice of Requirement for Project Labor Agreement.* When a project labor agreement (PLA) (a pre-hire collective bargaining agreement described in 29 U.S.C. 158(f)) is required for a large-scale construction contract, this provision requires the offeror to submit a copy of a PLA at the time offers are due, prior to award, or after contract award as determined by the agency. During the evaluation of offers on a construction contract, the contracting officer reviews the offeror's PLA to determine if it conforms with all statutes, regulations, and Executive Orders.

• *FAR 52.222–34, Project Labor Agreement.* When a PLA is required for a construction contract, this clause requires the contractor to maintain the PLA in a current state throughout the life of the contract. This recordkeeping requirement is necessary for the Government to ensure that the contractor stays a party to the PLA during the life of the construction contract.

• *FAR 52.222–46, Evaluation of Compensation for Professional Employees.* This provision requires offerors to submit for evaluation a total compensation plan setting forth proposed salaries and fringe benefits for professional employees working on the contract. The Government will use this information to determine if professional employees are compensated fairly and properly. Plans indicating unrealistically low professional employees' compensation may be assessed adversely as one of the factors considered in making a contract award.

C. Annual Burden

Respondents/Recordkeepers: 543,954.

Total Annual Responses: 619,350.

Total Burden Hours: 21,402 (21,231 reporting hours + 171 recordkeeping hours).

Obtaining Copies: Requesters may obtain a copy of the information collection documents from the GSA Regulatory Secretariat Division by calling 202–501–4755 or emailing *GSARegSec@gsa.gov.* Please cite OMB Control No. 9000–0066, Certain Federal Acquisition Regulation Part 22 Labor Requirements.

William F. Clark,

Director, Office of Governmentwide Acquisition Policy, Office of Acquisition Policy, Office of Governmentwide Policy.

[FR Doc. 2022–00341 Filed 1–10–22; 8:45 am]

BILLING CODE 6820–EP–P

DEPARTMENT OF HEALTH AND HUMAN SERVICES

Centers for Medicare & Medicaid Services

[Document Identifier CMS–10790]

Agency Information Collection Activities: Submission for OMB Review; Comment Request

AGENCY: Centers for Medicare & Medicaid Services, Health and Human Services (HHS).

ACTION: Notice.

SUMMARY: The Centers for Medicare & Medicaid Services (CMS) is announcing an opportunity for the public to comment on CMS' intention to collect information from the public. Under the Paperwork Reduction Act of 1995 (PRA), federal agencies are required to publish notice in the **Federal Register** concerning each proposed collection of information, including each proposed extension or reinstatement of an existing collection of information, and to allow a second opportunity for public comment on the notice. Interested persons are invited to send comments regarding the burden estimate or any other aspect of this collection of information, including the necessity and utility of the proposed information collection for the proper performance of the agency's functions, the accuracy of the estimated burden, ways to enhance the quality, utility, and clarity of the information to be collected, and the use of automated collection techniques or other forms of information technology to minimize the information collection burden.

DATES: Comments on the collection(s) of information must be received by the OMB desk officer by February 10, 2022.

ADDRESSES: Written comments and recommendations for the proposed information collection should be sent within 30 days of publication of this notice to *www.reginfo.gov/public/do/PRAMain*. Find this particular information collection by selecting ''Currently under 30-day Review—Open for Public Comments'' or by using the search function.

To obtain copies of a supporting statement and any related forms for the proposed collection(s) summarized in this notice, you may make your request using one of the following:

1. Access CMS' website address at: *https://www.cms.gov/Regulations-and-Guidance/Legislation/PaperworkReductionActof1995/PRA-Listing.html.*

FOR FURTHER INFORMATION CONTACT: William Parham at (410) 786–4669.

SUPPLEMENTARY INFORMATION: Under the Paperwork Reduction Act of 1995 (PRA) (44 U.S.C. 3501–3520), federal agencies must obtain approval from the Office of Management and Budget (OMB) for each collection of information they conduct or sponsor. The term ''collection of information'' is defined in 44 U.S.C. 3502(3) and 5 CFR 1320.3(c) and includes agency requests or requirements that members of the public submit reports, keep records, or provide information to a third party. Section 3506(c)(2)(A) of the PRA (44 U.S.C. 3506(c)(2)(A)) requires federal agencies to publish a 30-day notice in the **Federal Register** concerning each proposed collection of information, including each proposed extension or reinstatement of an existing collection of information, before submitting the collection to OMB for approval. To comply with this requirement, CMS is publishing this notice that summarizes the following proposed collection(s) of information for public comment:

1. *Type of Information Collection Request:* New collection (Request for a new OMB Control Number); *Title of Information Collection:* Medicare-Funded GME Residency Positions in accordance with Section 126 of the Consolidated Appropriations Act, 2020 (Pub. L. 116–93); *Use:* Section 126 of the Consolidated Appropriations Act (CAA), 2021 (Pub. L. 116–93), enacted December 20, 2020, included a key provision affecting Medicare payments for Graduate Medical Education (GME). Section 126(a) of the CAA amended section 1886(h) of the Act by adding a new section 1886(h)(9) requiring the distribution of additional residency positions (slots) to qualifying hospitals. Section 1886(h)(9)(A) makes an additional 1,000 Medicare funded residency slots available to be phased in beginning in FY 2023 until the aggregate number of 1,000 full-time equivalent residency positions are distributed.

This approval request is for CMS to receive electronic applications for Medicare-Funded GME Residency Positions submitted in accordance with Section 126 of the Consolidated Appropriations Act, 2021. The electronic applications will be submitted by the applicants in CMS' new Medicare Electronic Application Request Information System™ (MEARIS™). There is no existing, hard copy version of the application. The applications will provide CMS with the critical information necessary for CMS to process and score the applications in accordance with the policies finalized in the upcoming final rule to determine the disbursement of the slots and to announce the awardees by the January 31, 2023 required statutory deadline. *Form Number:* CMS–10790 (OMB control number: 0938–NEW); *Frequency:* Yearly; *Affected Public:* Private sector (Business or other for-profits and Not-for-profit institutions), State, Local, or Tribal Governments; *Number of Respondents:* 1,325; *Total Annual Responses:* 1,325; *Total Annual Hours:* 10,600. (For policy questions regarding this collection contact Noel Manlove at 410–786–5161.)

Dated: January 6, 2022.

William N. Parham, III,

Director, Paperwork Reduction Staff, Office of Strategic Operations and Regulatory Affairs.

[FR Doc. 2022–00343 Filed 1–10–22; 8:45 am]

BILLING CODE 4120–01–P

DEPARTMENT OF HEALTH AND HUMAN SERVICES

Centers for Medicare & Medicaid Services

[Document Identifiers: CMS–10286 and CMS–10325]

Agency Information Collection Activities: Proposed Collection; Comment Request

AGENCY: Centers for Medicare & Medicaid Services, Health and Human Services (HHS).

ACTION: Notice.

SUMMARY: The Centers for Medicare & Medicaid Services (CMS) is announcing an opportunity for the public to comment on CMS' intention to collect information from the public. Under the Paperwork Reduction Act of 1995 (the PRA), federal agencies are required to publish notice in the **Federal Register** concerning each proposed collection of information (including each proposed extension or reinstatement of an existing collection of information) and to allow 60 days for public comment on the proposed action. Interested persons are invited to send comments regarding our burden estimates or any other aspect of this collection of information, including the necessity and utility of the proposed information collection for the proper performance of the agency's functions, the accuracy of the estimated burden, ways to enhance the quality, utility, and clarity of the information to be collected, and the use of automated collection techniques or other forms of information technology to minimize the information collection burden.

DATES: Comments must be received by March 14, 2022.

ADDRESSES: When commenting, please reference the document identifier or OMB control number. To be assured consideration, comments and recommendations must be submitted in any one of the following ways:

1. *Electronically.* You may send your comments electronically to *http://www.regulations.gov.* Follow the instructions for ''Comment or Submission'' or ''More Search Options'' to find the information collection document(s) that are accepting comments.

2. *By regular mail.* You may mail written comments to the following address: CMS, Office of Strategic Operations and Regulatory Affairs, Division of Regulations Development, Attention: Document Identifier/OMB Control Number: _____ Room C4–26–05, 7500 Security Boulevard, Baltimore, Maryland 21244–1850.

To obtain copies of a supporting statement and any related forms for the proposed collection(s) summarized in this notice, you may make your request using one of following:

1. Access CMS' website address at *https://www.cms.gov/Regulations-and-Guidance/Legislation/PaperworkReductionActof1995/PRA-Listing.html.*

FOR FURTHER INFORMATION CONTACT: William N. Parham at (410) 786–4669.

SUPPLEMENTARY INFORMATION:

Contents

This notice sets out a summary of the use and burden associated with the following information collections. More detailed information can be found in each collection's supporting statement and associated materials (see **ADDRESSES**).

CMS–10286 Notice of Research Exception under the Genetic Information Nondiscrimination

CMS–10325 Disclosure and Recordkeeping Requirements for Grandfathered Health Plans under the Affordable Care Act

Under the PRA (44 U.S.C. 3501–3520), federal agencies must obtain approval from the Office of Management and Budget (OMB) for each collection of information they conduct or sponsor. The term ''collection of information'' is defined in 44 U.S.C. 3502(3) and 5 CFR 1320.3(c) and includes agency requests or requirements that members of the public submit reports, keep records, or provide information to a third party. Section 3506(c)(2)(A) of the PRA requires federal agencies to publish a 60-day notice in the **Federal Register** concerning each proposed collection of information, including each proposed extension or reinstatement of an existing collection of information, before submitting the collection to OMB for approval. To comply with this requirement, CMS is publishing this notice.

Information Collection

1. *Type of Information Collection Request:* Extension of a currently approved collection; *Title of Information Collection:* Notice of Research Exception under the Genetic Information Nondiscrimination Act; *Use:* Under the Genetic Information Nondiscrimination Act of 2008 (GINA), a plan or issuer may request (but not require) a genetic test in connection with certain research activities so long as such activities comply with specific requirements, including: (i) The research complies with 45 CFR part 46 or equivalent federal regulations and applicable State or local law or regulations for the protection of human subjects in research; (ii) the request for the participant or beneficiary (or in the case of a minor child, the legal guardian of such beneficiary) is made in writing and clearly indicates that compliance with the request is voluntary and that non-compliance will have no effect on eligibility for benefits or premium or contribution amounts; and (iii) no genetic information collected or acquired will be used for underwriting purposes. The Secretary of Labor or the Secretary of Health and Human Services is required to be notified if a group health plan or health insurance issuer intends to claim the research exception permitted under Title I of GINA. Nonfederal governmental group health plans and issuers solely in the individual health insurance market or Medigap market will be required to file with the Centers for Medicare & Medicaid Services (CMS). The Notice of Research Exception under the Genetic Information Nondiscrimination Act is a model notice that can be completed by group health plans and health insurance issuers and filed with either the Department of Labor or CMS to comply with the notification requirement. *Form Number:* CMS–10286 (OMB control number: 0938–1077); *Frequency:* Occasionally; *Affected Public:* Private Sector; State, Local or Tribal governments; *Number of Respondents:* 2; *Total Annual Responses:* 2; *Total Annual Hours:* 0.5. For policy questions regarding this collection contact Usree Bandyopadhyay at 410–786–6650.

2. *Type of Information Collection Request:* Extension of a currently approved collection; *Title of Information Collection:* Disclosure and Recordkeeping Requirements for Grandfathered Health Plans under the Affordable Care Act; *Use:* Section 1251 of the Affordable Care Act provides that certain plans and health insurance coverage in existence as of March 23, 2010, known as grandfathered health plans, are not required to comply with certain statutory provisions in the Act. The final regulations titled ''Final Rules under the Affordable Care Act for Grandfathered Plans, Preexisting Condition Exclusions, Lifetime and Annual Limits, Rescissions, Dependent Coverage, Appeals, and Patient Protections'' (80 FR 72192, November 18, 2015) require that, to maintain its status as a grandfathered health plan, a plan must maintain records documenting the terms of the plan in effect on March 23, 2010, and any other documents that are necessary to verify, explain or clarify status as a grandfathered health plan. The plan must make such records available for examination upon request by participants, beneficiaries, individual policy subscribers, or a state or federal agency official. A grandfathered health plan is also required to include a statement in any summary of benefits under the plan or health insurance coverage, that the plan or coverage believes it is a grandfathered health plan within the meaning of section 1251 of the Affordable Care Act, and providing contact information for participants to direct questions and complaints. In addition, a grandfathered group health plan that is changing health insurance issuers is required to provide the succeeding health insurance issuer (and the succeeding health insurance issuer must require) documentation of plan terms (including benefits, cost sharing, employer contributions, and annual limits) under the prior health insurance coverage sufficient to make a determination whether the standards of paragraph § 147.140(g)(1) of the final regulations are exceeded. It is also required that, for an insured group health plan (or a multiemployer plan) that is a grandfathered plan, the relevant policies, certificates, or contracts of insurance, or plan documents must disclose in a prominent and effective manner that employers, employee organizations, or plan sponsors, as applicable, are required to notify the issuer (or multiemployer plan) if the contribution rate changes at any point during the plan year. *Form Number:* CMS–10325 (OMB control number: 0938–1093); *Frequency:* Occasionally; *Affected Public:* Private Sector, State, Local or Tribal governments; *Number of Respondents:* 14,669; *Total Annual Responses:* 2,651,523; *Total Annual Hours:* 40. For policy questions regarding this collection contact Usree Bandyopadhyay at 410–786–6650.

Dated: January 6, 2022.

William N. Parham, III,

Director, Paperwork Reduction Staff, Office of Strategic Operations and Regulatory Affairs.

[FR Doc. 2022–00344 Filed 1–10–22; 8:45 am]

BILLING CODE 4120–01–P

DEPARTMENT OF HEALTH AND HUMAN SERVICES

Administration for Children and Families

Proposed Information Collection Activity; Judicial, Court, and Attorney Measures of Performance (New Collection)

AGENCY: Children's Bureau; Administration for Children and Families; HHS.

ACTION: Request for public comment.

SUMMARY: The Children's Bureau, Administration for Children and Families (ACF), U.S. Department of Health and Human Services (HHS), is proposing to collect data for a new descriptive study, Judicial, Court, and Attorney Measures of Performance (JCAMP).

DATES: *Comments due within 60 days of publication.* In compliance with the Paperwork Reduction Act of 1995, ACF is soliciting public comment on the specific aspects of the information collection described in this notice.

ADDRESSES: You can obtain copies of the proposed collection of information and submit comments by emailing

infocollection@acf.hhs.gov. Identify all requests by the title of the information collection.

SUPPLEMENTARY INFORMATION:

Description: This study will collect information from Court Improvement Program (CIP) staff to (1) understand data capacity and current use of performance measures and (2) gather feedback from the performance measure pilot process. This will be accomplished using two instruments:

JCAMP CIP Data Capacity Survey

The survey asks CIPs about their current capacity to collect specific data elements from the following six categories of measurement: (1) Legal and judicial context (*e.g.,* court docketing), (2) Practices (*e.g.,* attorney pre-petition legal practice), (3) Short-term outcomes that happen during hearings (*e.g.,* discussion of key issues), (4) Intermediate outcomes that happen during the case (*e.g.,* judicial continuity), (5) Long-term outcomes that happen after case closure (*e.g.,* child safety), and (6) Cross-cutting themes (*e.g.,* equity). The survey asks about capacity broadly and then specifically for a series of subcategories.

JCAMP Pilot Site Debrief Form

The JCAMP Pilot Site Debrief Form is a survey developed to be administered to CIP staff who have assisted with piloting of the performance measures. The survey asks participants about the challenges and successes in collecting pilot data for the measures, their confidence in collecting the data going forward, and suggestions for improving future efforts.

Respondents: Respondents include CIP Administrators and staff.

ANNUAL BURDEN ESTIMATES

Instrument	Total number of respondents	Total number of responses per respondent	Average burden hours per response	Total burden hours	Annual burden hours
JCAMP CIP Data Capacity Survey	106	1	.83	264	88
JCAMP Pilot Debrief Form	24	1	.25	18	6

Estimated Total Annual Burden Hours: 94.

Comments: The Department specifically requests comments on (a) whether the proposed collection of information is necessary for the proper performance of the functions of the agency, including whether the information shall have practical utility; (b) the accuracy of the agency's estimate of the burden of the proposed collection of information; (c) the quality, utility, and clarity of the information to be collected; and (d) ways to minimize the burden of the collection of information on respondents, including through the use of automated collection techniques or other forms of information technology. Consideration will be given to comments and suggestions submitted within 60 days of this publication.

Authority: Section 5106, Public Law 111–320, the Child Abuse Prevention and Treatment Act Reauthorization Act of 2010, and titles IV–B and IV–E of the Social Security Act.

Mary B. Jones,

ACF/OPRE Certifying Officer.

[FR Doc. 2022–00238 Filed 1–10–22; 8:45 am]

BILLING CODE 4184–29–P

DEPARTMENT OF HEALTH AND HUMAN SERVICES

Food and Drug Administration

[Docket No. FDA–2022–D–0053]

Notifying the Food and Drug Administration of a Permanent Discontinuance or Interruption in Manufacturing of a Device Under Section 506J of the Federal Food, Drug, and Cosmetic Act; Draft Guidance for Industry and Food and Drug Administration Staff; Availability

AGENCY: Food and Drug Administration, HHS.

ACTION: Notice of availability.

SUMMARY: The Food and Drug Administration (FDA or Agency) is announcing the availability of the draft guidance entitled ''Notifying FDA of a Permanent Discontinuance or Interruption in Manufacturing of a Device Under Section 506J of the FD&C Act.'' The Federal Food, Drug, and Cosmetic Act (FD&C Act) requires manufacturers to notify FDA of a permanent discontinuance in the manufacture of certain devices or an interruption in the manufacture of certain devices that is likely to lead to a meaningful disruption in supply of that device in the United States. This guidance is intended to assist manufacturers in providing timely, informative notifications about changes in the production of certain medical device products that will help prevent or mitigate shortages of such devices during or in advance of a public health emergency. FDA is issuing this guidance to implement amendments to the FD&C Act by the Coronavirus Aid, Relief, and Economic Security Act (CARES Act), as it relates to device shortages and potential device shortages during or in advance of a public health emergency. This draft guidance is not final nor is it in effect at this time.

DATES: Submit either electronic or written comments on the draft guidance by March 14, 2022 to ensure that the Agency considers your comment on this draft guidance before it begins work on the final version of the guidance.

ADDRESSES: You may submit comments on any guidance at any time as follows:

Electronic Submissions

Submit electronic comments in the following way:

- *Federal eRulemaking Portal: https://www.regulations.gov.* Follow the instructions for submitting comments. Comments submitted electronically, including attachments, to *https://www.regulations.gov* will be posted to the docket unchanged. Because your comment will be made public, you are solely responsible for ensuring that your comment does not include any confidential information that you or a third party may not wish to be posted, such as medical information, your or anyone else's Social Security number, or confidential business information, such as a manufacturing process. Please note that if you include your name, contact information, or other information that identifies you in the body of your

comments, that information will be posted on *https://www.regulations.gov.*

• If you want to submit a comment with confidential information that you do not wish to be made available to the public, submit the comment as a written/paper submission and in the manner detailed (see ''Written/Paper Submissions'' and ''Instructions'').

Written/Paper Submissions

Submit written/paper submissions as follows:

• *Mail/Hand Delivery/Courier (for written/paper submissions):* Dockets Management Staff (HFA–305), Food and Drug Administration, 5630 Fishers Lane, Rm. 1061, Rockville, MD 20852.

• For written/paper comments submitted to the Dockets Management Staff, FDA will post your comment, as well as any attachments, except for information submitted, marked, and identified, as confidential, if submitted as detailed in ''Instructions.''

Instructions: All submissions received must include the Docket No. FDA–2022–D–0053 for ''Notifying FDA of a Permanent Discontinuance or Interruption in Manufacturing of a Device Under Section 506J of the FD&C Act.'' Received comments will be placed in the docket and, except for those submitted as ''Confidential Submissions,'' publicly viewable at *https://www.regulations.gov* or at the Dockets Management Staff between 9 a.m. and 4 p.m., Monday through Friday, 240–402–7500.

• Confidential Submissions—To submit a comment with confidential information that you do not wish to be made publicly available, submit your comments only as a written/paper submission. You should submit two copies total. One copy will include the information you claim to be confidential with a heading or cover note that states ''THIS DOCUMENT CONTAINS CONFIDENTIAL INFORMATION.'' The Agency will review this copy, including the claimed confidential information, in its consideration of comments. The second copy, which will have the claimed confidential information redacted/blacked out, will be available for public viewing and posted on *https://www.regulations.gov.* Submit both copies to the Dockets Management Staff. If you do not wish your name and contact information to be made publicly available, you can provide this information on the cover sheet and not in the body of your comments and you must identify this information as ''confidential.'' Any information marked as ''confidential'' will not be disclosed except in accordance with 21 CFR 10.20 and other applicable disclosure law. For more information about FDA's posting of comments to public dockets, see 80 FR 56469, September 18, 2015, or access the information at: *https://www.govinfo.gov/content/pkg/FR-2015-09-18/pdf/2015-23389.pdf.*

Docket: For access to the docket to read background documents or the electronic and written/paper comments received, go to *https://www.regulations.gov* and insert the docket number, found in brackets in the heading of this document, into the ''Search'' box and follow the prompts and/or go to the Dockets Management Staff, 5630 Fishers Lane, Rm. 1061, Rockville, MD 20852, 240–402–7500.

You may submit comments on any guidance at any time (see 21 CFR 10.115(g)(5)).

An electronic copy of the guidance document is available for download from the internet. See the **SUPPLEMENTARY INFORMATION** section for information on electronic access to the guidance. Submit written requests for a single hard copy of the draft guidance document entitled ''Notifying FDA of a Permanent Discontinuance or Interruption in Manufacturing of a Device Under Section 506J of the FD&C Act'' to the Office of Policy, Guidance and Policy Development, Center for Devices and Radiological Health, Food and Drug Administration, 10903 New Hampshire Ave., Bldg. 66, Rm. 5431, Silver Spring, MD 20993–0002 or the Center for Biologics Evaluation and Research, Office of Communication, Outreach, and Development, 10903 New Hampshire Ave., Bldg. 71, Rm. 3128, Silver Spring, MD 20903. Send one self-addressed adhesive label to assist that office in processing your request.

FOR FURTHER INFORMATION CONTACT: Brittany Caldwell, Center for Devices and Radiological Health, Food and Drug Administration, 10903 New Hampshire Ave., Bldg. 66, Rm. 5556, Silver Spring, MD 20993–0002, 301–796–5900 or Stephen Ripley, Center for Biologics Evaluation and Research, Food and Drug Administration, 10903 New Hampshire Ave., Bldg. 71, Rm. 7301, Silver Spring, MD 20993, 240–402–7911.

SUPPLEMENTARY INFORMATION:

I. Background

On March 27, 2020, the CARES Act was signed into law. Section 3121 of the CARES Act amends the FD&C Act by adding section 506J to the statute. Section 506J of the FD&C Act (21 U.S.C. 356j) provides the Secretary of Health and Human Services with new authorities intended to help prevent or mitigate medical device shortages ''during, or in advance of, a public health emergency declared by the Secretary under section 319 of the Public Health Service Act.''

FDA is issuing this guidance to clarify and make recommendations regarding who should notify FDA, what information to include in the notification, and how to notify FDA, during or in advance of a public health emergency, regardless of the type of public health emergency. During a specific public health emergency, FDA may issue additional supplemental information to this guidance, through FDA's website or a supplemental guidance, to assist manufacturers in determining whether a notification under section 506J of the FD&C Act (hereafter referred to as a ''506J notification'') is required during a public health emergency.

FDA is issuing this draft guidance to assist stakeholders in the Agency's implementation of section 506J(a) of the FD&C Act outside of the COVID–19 Public Health Emergency. This draft guidance is not intended to supersede the COVID–19 Public Health Emergency Guidance, ''Notifying CDRH of a Permanent Discontinuance or Interruption in Manufacturing of a Device under 506J of the FD&C Act during the COVID–19 Public Health Emergency'' available at *https://www.fda.gov/regulatory-information/search-fda-guidance-documents/notifying-cdrh-permanent-discontinuance-or-interruption-manufacturing-device-under-section-506j-fdc,* which will be withdrawn at the end of the COVID–19 Public Health Emergency. Should this guidance be finalized before the COVID–19 public health emergency declaration expires or is withdrawn, the COVID–19 Public Health Emergency Guidance will be applicable for 506J related issues with respect to COVID–19.

This draft guidance is being issued consistent with FDA's good guidance practices regulation (21 CFR 10.115). The draft guidance, when finalized, will represent the current thinking of FDA on ''Notifying FDA of a Permanent Discontinuance or Interruption in Manufacturing of a Device Under Section 506J of the FD&C Act''. It does not establish any rights for any person and is not binding on FDA or the public. You can use an alternative approach if it satisfies the requirements of the applicable statutes and regulations.

II. Electronic Access

Persons interested in obtaining a copy of the draft guidance may do so by downloading an electronic copy from the internet. A search capability for all

Center for Devices and Radiological Health guidance documents is available at *https://www.fda.gov/medical-devices/device-advice-comprehensive-regulatory-assistance/guidance-documents-medical-devices-and-radiation-emitting-products.* This guidance document is also available at *https://www.regulations.gov, https://www.fda.gov/regulatory-information/search-fda-guidance-documents* or *https://www.fda.gov/vaccines-blood-biologics/guidance-compliance-regulatory-information-biologics/biologics-guidances.* Persons unable to download an electronic copy of ''Notifying FDA of a Permanent Discontinuance or Interruption in Manufacturing of a Device Under Section 506J of the FD&C Act'' may send an email request to *CDRH-Guidance@fda.hhs.gov* to receive an electronic copy of the document. Please use the document number 21003 and complete title to identify the guidance you are requesting.

III. Paperwork Reduction Act of 1995

This draft guidance refers to previously approved collections of information. These collections of information are subject to review by the Office of Management and Budget (OMB) under the Paperwork Reduction Act of 1995 (44 U.S.C. 3501–3521). The collections of information in section 506J of the FD&C Act have been approved by OMB as listed in the following table:

21 CFR part; guidance; or FDA form	Topic	OMB Control No.
506J	Shortages Data Collection	0910–0491

IV. Other Issues for Consideration

The Agency invites comments on the ''Notifying FDA of a Permanent Discontinuance or Interruption in Manufacturing of a Device Under Section 506J of the FD&C Act'' draft guidance, in general, and on the following questions, in particular:

- Section 506J of the FD&C Act requires notifications ''during, or in advance of'' a public health emergency. Does the draft guidance provide sufficient clarity regarding what FDA considers to be ''in advance of a public health emergency''? Is there additional information that you believe would be helpful? If so, what?
- Are there other situations or circumstances that could lead to a situation that could be considered to be ''in advance of a public health emergency''?
- FDA has proposed providing supplemental information during specific public health emergencies, which is intended to contain information specific to that public health emergency to assist manufacturers in providing notifications. Is there specific information that you believe should be conveyed in such supplements?
- Are there circumstances where it is unclear whether you should notify FDA? How could FDA provide clarity?
- Should FDA notify stakeholders when an event is considered to be ''in advance of a public health emergency'', and if so, how should FDA best do so?
- FDA recommends that manufacturers provide updates to notifications every two weeks unless otherwise indicated based on the nature of the situation, including the expected timeline for recovery, even if the status remains unchanged. Please provide feedback on this proposed frequency.
- How can FDA best disseminate supplemental information during or in advance of a public health emergency to manufacturers and other stakeholders?
- How can FDA keep all stakeholders, including healthcare providers and patients, better informed regarding shortages during or in advance of a public health emergency?
- In the draft guidance document, Appendix A displays an example of supplemental information for an epidemic or pandemic that FDA believes would be helpful to assess the overall state of the market and help inform potential mitigations. What additional information might be helpful for other public health emergencies?

Dated: January 5, 2022.

Lauren K. Roth,

Associate Commissioner for Policy.

[FR Doc. 2022–00321 Filed 1–10–22; 8:45 am]

BILLING CODE 4164–01–P

DEPARTMENT OF HEALTH AND HUMAN SERVICES

Food and Drug Administration

[Docket No. FDA–2014–D–0609]

Agency Information Collection Activities; Submission for Office of Management and Budget Review; Comment Request; Drug Supply Chain Security Act Implementation

AGENCY: Food and Drug Administration, HHS.

ACTION: Notice.

SUMMARY: The Food and Drug Administration (FDA, Agency, or we) is announcing that a proposed collection of information has been submitted to the Office of Management and Budget (OMB) for review and clearance under the Paperwork Reduction Act of 1995.

DATES: Submit written comments (including recommendations) on the collection of information by February 10, 2022.

ADDRESSES: To ensure that comments on the information collection are received, OMB recommends that written comments be submitted to *https://www.reginfo.gov/public/do/PRAMain.* Find this particular information collection by selecting ''Currently under Review—Open for Public Comments'' or by using the search function. The OMB control number for this information collection is 0910–0806. Also include the FDA docket number found in brackets in the heading of this document.

FOR FURTHER INFORMATION CONTACT: Domini Bean, Office of Operations, Food and Drug Administration, Three White Flint North, 10A–45, 11601 Landsdown St., North Bethesda, MD 20852, 301–796–5733, *PRAStaff@fda.hhs.gov.*

SUPPLEMENTARY INFORMATION: In compliance with 44 U.S.C. 3507, FDA has submitted the following proposed collection of information to OMB for review and clearance.

Drug Supply Chain Security Act Implementation

OMB Control Number 0910–0806—Revision

This information collection supports Agency implementation of provisions in section 582 of the Federal Food, Drug, and Cosmetic Act (FD&C Act) regarding the pharmaceutical distribution supply chain. Section 202 of the Drug Supply Chain Security Act (DSCSA) (Title II of Pub. L. 113–54), added sections 581 and 582 to the FD&C Act (21 U.S.C. 360eee and 360eee-1) and governs the tracing of certain pharmaceutical drugs, outlining critical steps for an electronic interoperable system to identify these

products as they are distributed within the United States.

To strengthen FDA's ability to help protect consumers from exposure to drugs that may be counterfeit, stolen, contaminated, or otherwise harmful, section 203 of the DSCSA added enhanced security provisions to section 582 of the FD&C Act. The terms and definitions established in section 581 of the FD&C Act are applicable to provisions set forth in section 582, which require the capture, exchange, and verification of pharmaceutical drug product transaction information, transaction history, and transaction statements by respondents. Section 582 of the FD&C Act also requires that certain notifications are made by respondents to FDA and provides for respondent notification disclosures applicable to suspect and illegitimate product data elements. The recordkeeping and notification provisions included in section 582 also provide for inspection of records by FDA and establish minimum retention schedules. Finally, section 582 of the FD&C Act provides for the establishment of waivers, exceptions, and exemptions from any of the requirements.

To assist respondents with reporting requirements, we developed Form FDA 3911 entitled Drug Notification and the corresponding instructional document ''INSTRUCTIONS FOR COMPLETION OF FORM FDA 3911—DRUG NOTIFICATION.'' Form FDA 3911 and the instructions are available from, and may be completed using, our website at *https://www.fda.gov/drugs/drug-supply-chain-security-act-dscsa/drug-notifications-frequently-asked-questions.* Form FDA 3911 is intended to provide a uniform format for initial notifications, followup notifications, and requests for the termination of a notification. The guidance document entitled ''Drug Supply Chain Security Act Implementation: Identification of Suspect Product and Notification'' (Revision 1, June 2021; available at *https://www.fda.gov/regulatory-information/search-fda-guidance-documents/drug-supply-chain-security-act-implementation-identification-suspect-product-and-notification*) was developed to assist respondents with identifying a suspect product as defined at section 581(21) of the FD&C Act and in making determinations in this regard.

We also developed the draft guidance document entitled ''Waivers, Exceptions, and Exemptions from the Requirements of Section 582 of the Federal Food, Drug, and Cosmetic Act'' (May 2018; available at *https://www.fda.gov/regulatory-information/search-fda-guidance-documents/waivers-exceptions-and-exemptions-requirements-section-582-federal-food-drug-and-cosmetic-act*). Respondents seeking waivers, exceptions, or exemptions from any of the requirements may submit a request to FDA. The draft guidance explains Agency established processes by which: (1) A trading partner may request a waiver from certain requirements in section 582 of the FD&C Act if it would result in an undue economic hardship or for emergency medical reasons; (2) a manufacturer or repackager may request an exception to the section 582 requirements related to product identifiers if a product is packaged in a container too small or otherwise unable to accommodate a label with sufficient space to bear the required information; and (3) FDA may determine other products or transactions that shall be exempt from requirements of section 582.

Respondents to the information collection are manufacturers, wholesale distributors (''wholesalers''), dispensers, and repackagers, as defined in section 581 of the FD&C Act, of pharmaceutical drug products.

In the **Federal Register** of September 3, 2021 (86 FR 49538), we published a 60-day notice soliciting public comment on the proposed collection of information. A few comments were received requesting that FDA clarify the scope of the information collection request. We appreciate these comments. Although our 60-day notice discussed both draft and final guidance documents pertaining to topic-specific statutory requirements found in section 582 of the FD&C Act, not all the guidance documents discussed in the notice included information collection as defined by the PRA and subject to review and approval by OMB. Rather, consistent with regulations found in 21 CFR 10.115, guidance documents are intended to communicate the Agency's thinking on a particular topic and can therefore be helpful to respondents in understanding related information collection activities.

To clarify however, this information collection request is intended to account for the burden respondents may incur from completing and submitting notifications as required by section 582 of the FD&C Act using Form FDA 3911, consistent with the corresponding instructions, as well as the burden that may be attributable to information collection associated with the required disclosures/notifications to trading partners and discussed in the guidance document entitled ''Drug Supply Chain Security Act Implementation: Identification of Suspect Product and Notification.'' The information collection request is also intended to account for the burden that respondents may incur associated with requesting waivers, exceptions, and exemptions provided for in section 582(a)(3) of the FD&C Act. To enable respondents to make such requests, we are currently utilizing information collection recommendations discussed in the draft guidance document entitled ''Waivers, Exceptions, and Exemptions from the Requirements of Section 582 of the Federal Food, Drug, and Cosmetic Act.'' Specifically, the draft guidance instructs respondents on submitting requests and identifies responsible Agency review components.

The comments also provided feedback on the accuracy of our burden estimates. In response to these comments, we have revised our estimate of the burden of the information collection as follows:

TABLE 1—ESTIMATED ANNUAL REPORTING BURDEN [1]

Sec. 582 of the FD&C Act; activity	Number of respondents	Number of responses per respondent	Total annual responses	Average time per response (in hours)	Total hours
Notifications of illegitimate product: Form FDA 3911	500	28.2	14,100	8	112,800
Consultation/terminations of notification of illegitimate product (Notifications Guidance, sec. IV.B)	500	1	500	1	500
582(a)(3); Waivers, exceptions, and exemptions of any requirement:					
Request submissions (Waivers Guidance, sec. III.A.)	20	1	20	80	1,600
Material changes (Waivers Guidance, sec. III.D)	1	1	1	16	16

TABLE 1—ESTIMATED ANNUAL REPORTING BURDEN [1]—Continued

Sec. 582 of the FD&C Act; activity	Number of respondents	Number of responses per respondent	Total annual responses	Average time per response (in hours)	Total hours
Request renewals (Waivers Guidance, sec. III)	1	1	1	16	16
Total					114,932

[1] There are no capital costs or operating and maintenance costs associated with this collection of information.

TABLE 2—ESTIMATED ANNUAL DISCLOSURE BURDEN [1]

Sec. 582 of the FD&C Act; activity	Number of respondents	Number of disclosures per respondent	Total disclosures	Average time per disclosure (in hours)	Total hours
Illegitimate product notifications to trading partners (Notifications Guidance, sec. III.B)	500	310	155,000	8	1,240,000
Illegitimate product notification terminations to trading partners (Notifications Guidance, sec. III)	500	310	155,000	4	620,000
Total					1,860,000

[1] There are no capital costs or operating and maintenance costs associated with this collection of information.

We have reorganized the information collection by respondent activity and clarified where information collection elements are discussed in the respective guidance documents. Based on illegitimate product notifications FDA has already received, we previously estimated a total of 250 respondents. However, we have considered industry feedback indicating that more notifications may be submitted based on stakeholder understanding of FDA's recent clarification of stolen product in the ''Definitions of Suspect Product and Illegitimate Product for Verification Obligations Under the Drug Supply Chain Security Act'' draft guidance (June 2021; available at *https://www.fda.gov/regulatory-information/search-fda-guidance-documents/definitions-suspect-product-and-illegitimate-product-verification-obligations-under-drug-supply*). As such, we have increased our number of estimated respondents to 500 and assume 40 percent are manufacturers (200), 50 percent are wholesale distributors (250), and 10 percent are pharmacies (50). Because manufacturers, repackagers, and wholesale distributors are collectively responsible for prescription drugs from the point of manufacturing through distribution in the drug supply chain, we continue to assume that these three trading partners submit most notifications of illegitimate products.

In response to industry feedback, we have increased our estimate of the average time per response from 1 hour to 8 hours to more accurately reflect the burden respondents may incur in satisfying the information collection. We have otherwise retained the average burden per response for activities associated with consultations and waiver/exception/exemption requests. Finally, also based on public comment and industry feedback, we have increased our estimate of the average number of disclosures/notifications per respondent, as well as our assumption of the average time necessary for each disclosure notification, for an increase from 66,070 to 1,860,000 hours annually.

As a result of these adjustments, our estimated burden for the information collection reflects a cumulative increase since the last OMB review and approval. We attribute this increase to a more recent evaluation of the information collection and informal communications with industry and other interested stakeholders regarding burden estimates.

Dated: January 3, 2022.

Lauren K. Roth,

Associate Commissioner for Policy.

[FR Doc. 2022–00327 Filed 1–10–22; 8:45 am]

BILLING CODE 4164–01–P

DEPARTMENT OF HEALTH AND HUMAN SERVICES

Health Resources and Services Administration

Agency Information Collection Activities: Proposed Collection: Public Comment Request; Telehealth Resource Center Performance Measurement Tool, OMB No. 0915–0361—Extension

AGENCY: Health Resources and Services Administration (HRSA), Department of Health and Human Services.

ACTION: Notice.

SUMMARY: In compliance with the requirement for opportunity for public comment on proposed data collection projects of the Paperwork Reduction Act of 1995, HRSA announces plans to submit an Information Collection Request (ICR), described below, to the Office of Management and Budget (OMB). Prior to submitting the ICR to OMB, HRSA seeks comments from the public regarding the burden estimate, below, or any other aspect of the ICR.

DATES: Comments on this ICR should be received no later than March 14, 2022.

ADDRESSES: Submit your comments to *paperwork@hrsa.gov* or by mail to the HRSA Information Collection Clearance Officer, Room 14N136B, 5600 Fishers Lane, Rockville, MD 20857.

FOR FURTHER INFORMATION CONTACT: To request more information on the proposed project or to obtain a copy of the data collection plans and draft instruments, email *paperwork@hrsa.gov* or call Samantha Miller, the acting

HRSA Information Collection Clearance Officer at (301) 443–9094.

SUPPLEMENTARY INFORMATION: When submitting comments or requesting information, please include the information collection request title for reference.

Information Collection Request Title: Telehealth Resource Center Performance Measurement Tool OMB No. 0915–0361—Extension

Abstract: HRSA requests an extension of their Telehealth Resource Center Performance Measurement Tool. The Telehealth Resource Centers (TRC) deliver telehealth technical assistance. There are two types of HRSA TRC programs:

- Two National Telehealth Resource Center Programs focus on policy and technology.
- 12 Regional Telehealth Resource Center Programs host activities and provide resources to rural and underserved areas.

The HRSA Telehealth Resource Centers:

- Provide training and support
- Publicize information and research findings
- Support collaboration and partnerships
- Promote effective partnerships
- Promote the use of telehealth by providing health care information and education to the public and medical specialists.

The TRCs share expertise through individual consults, training, webinars, conference presentations, and the web.

Need and Proposed Use of the Information: In order to evaluate existing programs, data are submitted to HRSA's Office for the Advancement of Telehealth (OAT) through HRSA's Performance Improvement Management System (PIMS). The data are used to measure the effectiveness of the technical assistance (TA). There is one data reporting period each year; during these reporting periods, data are reported for the previous twelve months of activity. Programs have approximately six weeks to enter their data into the PIMS system during each annual reporting period.

The instrument was developed with the following four goals in mind:

1. Improving access to needed services,
2. Reducing rural and underserved population practitioner isolation,
3. Improving health system productivity and efficiency, and
4. Improving patient outcomes.

The TRCs currently report on existing performance data elements using PIMS. The performance measures are designed to assess how the TRC program is meeting its goals to:

- Expand the availability of telehealth services in underserved communities;
- Improve the quality, efficiency, and effectiveness of telehealth services;
- Promote knowledge exchange and dissemination about efficient and effective telehealth practices and technology; and
- Establish sustainable TA centers providing quality, unbiased TA for the development and expansion of effective and efficient telehealth services in underserved communities.

Additionally, the PIMS tool allows OAT to:

- Determine the value added from the TRC Cooperative Agreement;
- Justify budget requests;
- Collect uniform, consistent data which enables OAT to monitor programs;
- Provide guidance to grantees on important indicators to track over time for their own internal program management;
- Measure performance relative to the mission of OAT/HRSA as well as individual goals and objectives of the program;
- Identify topics of interest for future special studies; and
- Identify changes in health care needs within rural and underserved communities, allowing programs to shift focus in order to meet those needs.

Likely Respondents: The likely respondents will be telehealth associations, telehealth providers, rural and underserved health providers, clinicians that deliver services via telehealth, technical assistance providers, research organizations and academic medical centers.

Burden Statement: Burden in this context means the time expended by persons to generate, maintain, retain, disclose, or provide the information requested. This includes the time needed to review instructions; to develop, acquire, install, and utilize technology and systems for the purpose of collecting, validating and verifying information, processing and maintaining information, and disclosing and providing information; to train personnel and to be able to respond to a collection of information; to search data sources; to complete and review the collection of information; and to transmit or otherwise disclose the information. The total annual burden hours estimated for this ICR are summarized in the table below.

TOTAL ESTIMATED ANNUALIZED BURDEN HOURS

Form name	Number of respondents	Number of responses per respondent	Total responses	Average burden per response (in hours)	Total burden hours
Telehealth Resource Center Performance Measurement Tool	14	42	588	0.07	41
	14		588		41

HRSA specifically requests comments on (1) the necessity and utility of the proposed information collection for the proper performance of the agency's functions, (2) the accuracy of the estimated burden, (3) ways to enhance the quality, utility, and clarity of the information to be collected, and (4) the use of automated collection techniques or other forms of information technology to minimize the information collection burden.

Maria G. Button,

Director, Executive Secretariat.

[FR Doc. 2022–00328 Filed 1–10–22; 8:45 am]

BILLING CODE 4165–15–P

DEPARTMENT OF HEALTH AND HUMAN SERVICES

[Document Identifier OS–0990–0478]

Agency Information Collection Request; 30-Day Public Comment Request

AGENCY: Office of the Secretary, HHS.

ACTION: Notice.

SUMMARY: In compliance with the requirement of the Paperwork Reduction Act of 1995, the Office of the Secretary (OS), Department of Health and Human Services, is publishing the following summary of a proposed collection for public comment. Since March 29, 2020, the U.S. government has been collecting data from hospitals and states to understand health care system stress, capacity, capabilities, and the number of patients hospitalized due to COVID–19. As the COVID–19 response continues to evolve, Federal needs for data are also evolving. The data elements within the collection are being altered to best meet the needs of the current response to COVID–19. This alteration includes the addition of data elements collecting more detailed information on pediatric hospitalizations, which will help to better understand pediatric hospital surge as well as inform epidemiologic surveillance to inform potential response actions. The alteration also includes making various data elements inactive for federal data collection based on current and anticipated future federal response needs, as well as reduce burden where possible. While inactive, these data elements will still be considered as remaining part of the data collection to allow jurisdictions to continue collecting the information if it is needed for their unique response needs.

DATES: Comments on the ICR must be received on or before February 10, 2022.

ADDRESSES: Written comments and recommendations for the proposed information collection should be sent within 30 days of publication of this notice. To be assured consideration, comments and recommendations must be submitted in any one of the following ways:

1. *Electronically.* You may send your comments electronically to *http://www.regulations.gov.* Follow the instructions for ''Comment or Submission'' or ''More Search Options'' to find the information collection document(s) that are accepting comments.

2. *By regular mail. www.reginfo.gov/public/do/PRAMain.* Find this particular information collection by selecting ''Currently under 30-day Review—Open for Public Comments'' or by using the search function.

FOR FURTHER INFORMATION CONTACT: Sherrette Funn, *Sherrette.Funn@hhs.gov* or (202) 795–7714. When submitting comments or requesting information, please include the document identifier 0990–0478–30D and project title for reference.

SUPPLEMENTARY INFORMATION: This **Federal Register** notice seeks public comment on the emergency revision with substantive changes recently submitted to OMB for review and approval. These comments will be reviewed and taken into consideration if the Department intends to make any revisions to the information collection request approved under [0990–0478]. Interested persons are invited to submit comments regarding the aforementioned emergency revision with substantive changes or any other aspect of this collection of information, including: The necessity and utility of the proposed information collection for the proper performance of the agency's functions, the accuracy of the estimated burden, ways to enhance the quality, utility and clarity of the information to be collected, and the use of automated collection techniques or other forms of information technology to minimize the information collection burden.

Interested persons are invited to send comments regarding this burden estimate or any other aspect of this collection of information, including any of the following subjects: (1) The necessity and utility of the proposed information collection for the proper performance of the agency's functions; (2) the accuracy of the estimated burden; (3) ways to enhance the quality, utility, and clarity of the information to be collected; and (4) the use of automated collection techniques or other forms of information technology to minimize the information collection burden.

Title of the Collection: U.S. Healthcare COVID–19 Portal.

Type of Collection: Emergency revision, substantial change.

OMB No.: 0990–0478—U.S. Department of Health and Human Services (HHS) Office of the Secretary. This notice also includes changing the data collection owner from the HHS Office of the Chief Information Officer (OCIO) to the HHS Assistant Secretary for Preparedness and Response (ASPR).

Abstract: The Unified Hospital Data Surveillance System (UHDSS) was created in 2020 to monitor COVID–19 health care system capacity and surge and inform epidemiological surveillance. The collection requires daily responses from all hospitals in the U.S., with some jurisdictions (state, local, tribal, or territorial governments) compiling submissions for hospitals within their locality.

ESTIMATED ANNUALIZED BURDEN TABLE

Type of respondent	Form name	Number of respondents	Number responses per respondent	Average burden per response (in hours)	Total burden hours
Hospitals (excluding Psychiatric and Rehabilitation Hospitals).	HHS Teletracking COVID–19 Portal	5200	365	1.25	2,372,500
Psychiatric and Rehabilitation Hospitals.	HHS Teletracking COVID–19 Portal	800	52	1.25	52,000
Infusion Centers and Outpatient Clinics reporting Inventory & use of therapeutics (MABs).	HHS Teletracking COVID–19 Portal	400	52	0.25	5,200
Total					2,429,700

Sherrette A. Funn,

Paperwork Reduction Act Reports Clearance Officer, Office of the Secretary.

[FR Doc. 2022–00237 Filed 1–10–22; 8:45 am]

BILLING CODE 4150–37–P

DEPARTMENT OF HEALTH AND HUMAN SERVICES

National Institutes of Health

National Institute of Arthritis and Musculoskeletal and Skin Diseases; Notice of Meeting

Pursuant to section 10(d) of the Federal Advisory Committee Act, as amended, notice is hereby given of a meeting of the National Arthritis and Musculoskeletal and Skin Diseases Advisory Council.

The meeting will be open to the public as indicated below, with attendance limited to space available. Individuals who plan to attend and need special assistance, such as sign language interpretation or other reasonable accommodations, should notify the Contact Person listed below in advance of the meeting.

The meeting will be closed to the public in accordance with the provisions set forth in sections 552b(c)(4) and 552b(c)(6), Title 5 U.S.C., as amended. The grant applications and the discussions could disclose confidential trade secrets or commercial property such as patentable material, and personal information concerning individuals associated with the grant applications, the disclosure of which would constitute a clearly unwarranted invasion of personal privacy.

Name of Committee: National Arthritis and Musculoskeletal and Skin Diseases Advisory Council.

Date: February 1, 2022.

Open: 9:30 a.m. to 12:50 p.m.

Agenda: Discussion of Program Policies and Issues.

Place: National Institute of Arthritis and Musculoskeletal and Skin Diseases, 6701 Democracy Blvd., Democracy I, Suite 800, Bethesda MD 20892–4872, *http://videocast.nih.gov/* (Virtual Meeting).

Virtual Access: The meeting will be videocast and can be accessed from the NIH Videocast *http://videocast.nih.gov.* Please note, the link to the videocast meeting will be posted within a week of the meeting date. Any member of the public may submit written comments no later than 15 days after the meeting.

Closed: 2:00 p.m. to 4:00 p.m.

Agenda: To review and evaluate to review and evaluate grant applications.

Place: National Institute of Arthritis and Musculoskeletal and Skin Diseases, 6701 Democracy Blvd., Democracy I, Suite 800, Bethesda MD 20892–4872 (Virtual Meeting).

Contact Person: Melinda Nelson Director, Office of Extramural Operations, 6701 Democracy Blvd., Democracy I, Suite 800, Bethesda MD 20892–4872, (301) 435–5278, *nelsonm@mail.nih.gov.*

Any interested person may file written comments with the committee by forwarding the statement to the Contact Person listed on this notice. The statement should include the name, address, telephone number and when applicable, the business or professional affiliation of the interested person.

(Catalogue of Federal Domestic Assistance Program Nos. 93.846, Arthritis, Musculoskeletal and Skin Diseases Research, National Institutes of Health, HHS)

Dated: January 5, 2022.

Miguelina Perez,

Program Analyst, Office of Federal Advisory Committee Policy.

[FR Doc. 2022–00269 Filed 1–10–22; 8:45 am]

BILLING CODE 4140–01–P

DEPARTMENT OF HEALTH AND HUMAN SERVICES

National Institutes of Health

National Heart, Lung, and Blood Institute; Notice of Closed Meeting

Pursuant to section 10(d) of the Federal Advisory Committee Act, as amended, notice is hereby given of the following meeting.

The meeting will be closed to the public in accordance with the provisions set forth in sections 552b(c)(4) and 552b(c)(6), Title 5 U.S.C., as amended. The grant applications and the discussions could disclose confidential trade secrets or commercial property such as patentable material, and personal information concerning individuals associated with the grant applications, the disclosure of which would constitute a clearly unwarranted invasion of personal privacy.

Name of Committee: Heart, Lung, and Blood Initial Review Group; NHLBI Single-Site and Pilot Clinical Trials Study Section.

Date: February 23–24, 2022.

Time: 9:00 a.m. to 6:00 p.m.

Agenda: To review and evaluate grant applications.

Place: National Institutes of Health, 6705 Rockledge Drive, Bethesda, MD 20817 (Virtual Meeting).

Contact Person: YingYing Li-Smerin, MD, Ph.D., Scientific Review Officer, Office of Scientific Review/DERA, National Heart, Lung, and Blood Institute, 6705 Rockledge Drive, Room 207–P, Bethesda, MD 20892–7924, 301–827–7942, *lismerin@nhlbi.nih.gov.*

(Catalogue of Federal Domestic Assistance Program Nos. 93.233, National Center for Sleep Disorders Research; 93.837, Heart and Vascular Diseases Research; 93.838, Lung Diseases Research; 93.839, Blood Diseases and Resources Research, National Institutes of Health, HHS)

Dated: January 6, 2022.

David W Freeman,

Program Analyst, Office of Federal Advisory Committee Policy.

[FR Doc. 2022–00308 Filed 1–10–22; 8:45 am]

BILLING CODE 4140–01–P

DEPARTMENT OF HEALTH AND HUMAN SERVICES

National Institutes of Health

Center for Scientific Review; Notice of Closed Meetings

Pursuant to section 10(d) of the Federal Advisory Committee Act, as amended, notice is hereby given of the following meetings.

The meetings will be closed to the public in accordance with the provisions set forth in sections 552b(c)(4) and 552b(c)(6), Title 5 U.S.C., as amended. The grant applications and the discussions could disclose confidential trade secrets or commercial property such as patentable material, and personal information concerning individuals associated with the grant applications, the disclosure of which would constitute a clearly unwarranted invasion of personal privacy.

Name of Committee: Population Sciences and Epidemiology Integrated Review Group; Behavioral Genetics and Epidemiology Study Section.

Date: February 8–9, 2022.

Time: 9:00 a.m. to 7:00 p.m.

Agenda: To review and evaluate grant applications.

Place: National Institutes of Health, Rockledge II, 6701 Rockledge Drive, Bethesda, MD 20892 (Virtual Meeting).

Contact Person: Andrew Louden, Ph.D., Scientific Review Officer, Center for Scientific Review, National Institutes of Health, 6701 Rockledge Drive, Room 3137, Bethesda, MD 20817, (301) 435–1985, *loudenan@csr.nih.gov.*

Name of Committee: Healthcare Delivery and Methodologies Integrated Review Group; Clinical Informatics and Digital Health Study Section.

Date: February 9–10, 2022.

Time: 9:00 a.m. to 7:00 p.m.

Agenda: To review and evaluate grant applications.

Place: National Institutes of Health, Rockledge II, 6701 Rockledge Drive, Bethesda, MD 20892 (Virtual Meeting).

Contact Person: Paul Hewett-Marx, Ph.D., Scientific Review Officer, Center for Scientific Review, National Institute of Health, 6701 Rockledge Drive, Room, Bethesda, MD 20892, (240) 672–8946, *hewettmarxpn@csr.nih.gov.*

Name of Committee: Surgical Sciences, Biomedical Imaging and Bioengineering Integrated Review Group; Imaging Probes and Contrast Agents Study Section.

Date: February 10–11, 2022.

Time: 9:00 a.m. to 8:00 p.m.

Agenda: To review and evaluate grant applications.

Place: National Institutes of Health, Rockledge II, 6701 Rockledge Drive, Bethesda, MD 20892 (Virtual Meeting).

Contact Person: Donald Scott Wright, Ph.D., Scientific Review Officer, Center for Scientific Review, National Institutes of Health, 6701 Rockledge Drive, Room 5108, MSC 7854, Bethesda, MD 20892, (301) 435–8363, *wrightds@csr.nih.gov.*

Name of Committee: Healthcare Delivery and Methodologies Integrated Review Group; Clinical Data Management and Analysis Study Section.

Date: February 10–11, 2022.

Time: 9:00 a.m. to 8:00 p.m.

Agenda: To review and evaluate grant applications.

Place: National Institutes of Health, Rockledge II, 6701 Rockledge Drive, Bethesda, MD 20892 (Virtual Meeting).

Contact Person: Chittari V. Shivakumar, Ph.D., Scientific Review Officer, National Institutes of Health, Center for Scientific Review, 6701 Rockledge Drive, Bethesda, MD 20892, (301) 408–9098, *chittari.shivakumar@nih.gov.*

Name of Committee: Vascular and Hematology Integrated Review Group; Atherosclerosis and Vascular Inflammation Study Section.

Date: February 10–11, 2022.

Time: 9:00 a.m. to 9:00 p.m.

Agenda: To review and evaluate grant applications.

Place: National Institutes of Health, Rockledge II, 6701 Rockledge Drive, Bethesda, MD 20892 (Virtual Meeting).

Contact Person: Natalia Komissarova, Ph.D., Scientific Review Officer, Center for Scientific Review, National Institutes of Health, 6701 Rockledge Drive, Room 5207, MSC 7846, Bethesda, MD 20892, (301) 435–1206, *komissar@mail.nih.gov.*

Name of Committee: Endocrinology, Metabolism, Nutrition and Reproductive Sciences Integrated Review Group; Basic Mechanisms of Diabetes and Metabolism Study Section.

Date: February 10–11, 2022.

Time: 9:30 a.m. to 7:30 p.m.

Agenda: To review and evaluate grant applications.

Place: National Institutes of Health, Rockledge II, 6701 Rockledge Drive, Bethesda, MD 20892 (Virtual Meeting).

Contact Person: Liliana Norma Berti-Mattera, Ph.D., Scientific Review Officer, Center for Scientific Review, National Institutes of Health, 6701 Rockledge Drive, RM 6158, MSC 7890, Bethesda, MD 20892, (301) 827–7609, *liliana.berti-mattera@nih.gov.*

Name of Committee: Brain Disorders and Clinical Neuroscience Integrated Review Group; Developmental Brain Disorders Study Section.

Date: February 10–11, 2022.

Time: 10:00 a.m. to 7:00 p.m.

Agenda: To review and evaluate grant applications.

Place: National Institutes of Health, 6701 Rockledge Drive, Bethesda, MD 20892 (Virtual Meeting).

Contact Person: Pat Manos, Ph.D., Scientific Review Officer, Center for Scientific Review, National Institutes of Health, 6701 Rockledge Drive, Room 5200, MSC 7846, Bethesda, MD 20892, (301) 408–9866, *manospa@csr.nih.gov.*

Name of Committee: Endocrinology, Metabolism, Nutrition and Reproductive Sciences Integrated Review Group; Human Studies of Diabetes and Obesity Study Section.

Date: February 10–11, 2022.

Time: 10:00 a.m. to 8:00 p.m.

Agenda: To review and evaluate grant applications.

Place: National Institutes of Health, Rockledge II, 6701 Rockledge Drive, Bethesda, MD 20892 (Virtual Meeting).

Contact Person: Hui Chen, MD, Scientific Review Officer, Center for Scientific Review, National Institutes of Health, 6701 Rockledge Drive, Room 6164, Bethesda, MD 20892, (301) 435–1044, *chenhui@csr.nih.gov.*

(Catalogue of Federal Domestic Assistance Program Nos. 93.306, Comparative Medicine; 93.333, Clinical Research, 93.306, 93.333, 93.337, 93.393–93.396, 93.837–93.844, 93.846–93.878, 93.892, 93.893, National Institutes of Health, HHS)

Dated: January 5, 2022.

Miguelina Perez,

Program Analyst, Office of Federal Advisory Committee Policy.

[FR Doc. 2022–00270 Filed 1–10–22; 8:45 am]

BILLING CODE 4140–01–P

DEPARTMENT OF HEALTH AND HUMAN SERVICES

National Institutes of Health

National Institute of Environmental Health Sciences; Notice of Meeting

Pursuant to section 10(d) of the Federal Advisory Committee Act, as amended, notice is hereby given of a meeting of the National Advisory Environmental Health Sciences Council.

The meeting will be open to the public as indicated below, with attendance limited to space available. Individuals who plan to attend and need special assistance, such as sign language interpretation or other reasonable accommodations, should notify the Contact Person listed below in advance of the meeting.

The meeting will be closed to the public in accordance with the provisions set forth in sections 552b(c)(4) and 552b(c)(6), Title 5 U.S.C., as amended. The grant applications and the discussions could disclose confidential trade secrets or commercial property such as patentable material, and personal information concerning individuals associated with the grant applications, the disclosure of which would constitute a clearly unwarranted invasion of personal privacy.

Name of Committee: National Advisory Environmental Health Sciences Council.

Date: February 15–16, 2022.

Closed: February 15, 2022, 11:00 a.m. to 11:45 a.m.

Agenda: To review and evaluate to review and evaluate to review and evaluate grant applications.

Place: Division of Extramural Research and Training, National Institute of Environmental Health Sciences, Durham, NC 27709 (Virtual Meeting).

Open: February 15, 2022, 12:00 p.m. to 4:30 p.m.

Agenda: Discussion of program policies and issues/Council Discussion.

Place: Division of Extramural Research and Training, National Institute of Environmental Health Sciences, Durham, NC 27709, *https://www.niehs.nih.gov/news/webcasts/* (Virtual Meeting).

Open: February 16, 2022, 11:00 a.m. to 5:00 p.m.

Agenda: Discussion of program policies and issues/Council Discussion.

Place: Division of Extramural Research and Training, National Institute of Environmental Health Sciences, Durham, NC 27709, *https://www.niehs.nih.gov/news/webcasts/* (Virtual Meeting).

Contact Person: Patrick Mastin, Ph.D., Deputy Division Director, Division of Extramural Research and Training, National Institute of Environmental Health Sciences, Durham, NC 27709, 984–287–3285, *mastin@niehs.nih.gov.*

Any interested person may file written comments with the committee by forwarding the statement to the Contact Person listed on this notice. The statement should include the name, address, telephone number and when applicable, the business or professional affiliation of the interested person.

Information is also available on the Institute's/Center's home page: *www.niehs.nih.gov/dert/c-agenda.htm,* where an agenda and any additional information for the meeting will be posted when available.

(Catalogue of Federal Domestic Assistance Program Nos. 93.115, Biometry and Risk Estimation—Health Risks from Environmental Exposures; 93.142, NIEHS Hazardous Waste Worker Health and Safety Training; 93.143, NIEHS Superfund Hazardous Substances—Basic Research and Education; 93.894, Resources and Manpower Development in the Environmental Health Sciences; 93.113, Biological Response to Environmental Health Hazards; 93.114, Applied Toxicological Research and Testing, National Institutes of Health, HHS)

Dated: January 5, 2022.

David W. Freeman,

Program Analyst, Office of Federal Advisory Committee Policy.

[FR Doc. 2022–00271 Filed 1–10–22; 8:45 am]

BILLING CODE 4140–01–P

DEPARTMENT OF HEALTH AND HUMAN SERVICES

National Institutes of Health

National Institute of Mental Health; Notice of Meeting

Pursuant to section 10(d) of the Federal Advisory Committee Act, as amended, notice is hereby given of a meeting of the National Advisory Mental Health Council.

The meeting will be held as a virtual meeting and is open to the public. Individuals who plan to view the virtual meeting and need special assistance or other reasonable accommodations to view the meeting, should notify the Contact Person listed below in advance of the meeting. The open session will be videocast and can be accessed from the NIH Videocasting and Podcasting website (*http://videocast.nih.gov*).

The meeting will be closed to the public in accordance with the provisions set forth in sections 552b(c)(4) and 552b(c)(6), Title 5 U.S.C., as amended. The grant applications and/or contract proposals and the discussions could disclose confidential trade secrets or commercial property such as patentable material, and personal information concerning individuals associated with the grant applications and/or contract proposals, the disclosure of which would constitute a clearly unwarranted invasion of personal privacy.

Name of Committee: National Advisory Mental Health Council.

Date: January 31–February 1, 2022.

Closed: January 31, 2022, 11:00 a.m. to 11:50 a.m.

Agenda: To review and evaluate to review and evaluate the NIMH Division of Intramural Research Programs.

Place: National Institutes of Health, Neuroscience Center, 6001 Executive Boulevard, Rockville, MD 20852 (Virtual Meeting).

Closed: January 31, 2022, 12:30 p.m. to 4:05 p.m.

Agenda: To review and evaluate grant applications and/or proposals.

Place: National Institutes of Health, Neuroscience Center, 6001 Executive Boulevard, Rockville, MD 20852 (Virtual Meeting).

Open: February 01, 2022, 12:00 p.m. to 4:15 p.m.

Agenda: Presentation of the NIMH Director's Report and discussion of NIMH program.

Place: National Institutes of Health, Neuroscience Center, 6001 Executive Boulevard, Rockville, MD 20852 (Virtual Meeting).

Contact Person: Tracy Lynn Waldeck, Ph.D., Director, Division of Extramural Activity, National Institute of Mental Health, Neuroscience Center, 6001 Executive Boulevard, Room 4133, Bethesda, MD 20892, 301–480–6833, *waldeckt@mail.nih.gov.*

Any interested person may file written comments with the committee by forwarding the statement to the Contact Person listed on this notice. The statement should include the name, address, telephone number and when applicable, the business or professional affiliation of the interested person.

Information is also available on the Institute's/Center's home page: *www.nimh.nih.gov/about/advisory-boards-and-groups/namhc/index.shtml.,* where an agenda and any additional information for the meeting will be posted when available.

(Catalogue of Federal Domestic Assistance Program No. 93.242, Mental Health Research Grants, National Institutes of Health, HHS)

Dated: January 6, 2022.

David W. Freeman,

Program Analyst, Office of Federal Advisory Committee Policy.

[FR Doc. 2022–00304 Filed 1–10–22; 8:45 am]

BILLING CODE 4140–01–P

DEPARTMENT OF HEALTH AND HUMAN SERVICES

National Institutes of Health

Eunice Kennedy Shriver National Institute of Child Health & Human Development; Amended Notice of Meeting

Notice is hereby given of a change in the meeting of the National Advisory Child Health and Human Development Council, January 11, 2022, 12:00 p.m. to 5:00 p.m.; January 12, 2022, 12:00 to 5:00 p.m., NIH, Building 31, 31 Center Drive, C-Wing, Conference Room 6, Bethesda, MD 20894 which was published in the **Federal Register** on December 1, 2021, 86 FR 228.

The open session of the meeting on January 12, 2022, 12:00 p.m. to 1:00 p.m. has been canceled. Closed session of the meeting will begin on January 12, 2022, 12:00 p.m. to 5:00 p.m.

David W. Freeman,

Program Analyst, Office of Federal Advisory Committee Policy.

[FR Doc. 2022–00306 Filed 1–10–22; 8:45 am]

BILLING CODE 4140–01–P

DEPARTMENT OF HEALTH AND HUMAN SERVICES

National Institutes of Health

National Cancer Institute; Amended Notice of Meeting

Notice is hereby given of a change in the meeting of the National Cancer Institute Special Emphasis Panel, Translational and Basic Research Early Lesions (U54 and U24), March 02, 2022, 09:00 a.m. to March 03, 2022, 06:00 p.m., National Cancer Institute at Shady Grove, Room 7W108, 9609 Medical Center Drive, Rockville, Maryland 20850 which was published in the **Federal Register** on December 20, 2021, FR Doc 2021–27482, 86 FR 71902.

This notice is being amended to change the meeting date from March 2–3, 2022 to March 15–16, 2022. The meeting times and location will stay the same. The meeting is closed to the public.

Dated: January 5, 2022.

David W. Freeman,

Program Analyst, Office of Federal Advisory Committee Policy.

[FR Doc. 2022–00258 Filed 1–10–22; 8:45 am]

BILLING CODE 4140–01–P

DEPARTMENT OF HEALTH AND HUMAN SERVICES

National Institutes of Health

Eunice Kennedy Shriver National Institute of Child Health & Human Development; Notice of Closed Meeting

Pursuant to section 10(d) of the Federal Advisory Committee Act, as amended, notice is hereby given of the following meeting.

The meeting will be closed to the public in accordance with the provisions set forth in sections 552b(c)(4) and 552b(c)(6), Title 5 U.S.C., as amended. The grant applications and the discussions could disclose confidential trade secrets or commercial property such as patentable material, and personal information concerning individuals associated with the grant applications, the disclosure of which would constitute a clearly unwarranted invasion of personal privacy.

Name of Committee: National Institute of Child Health and Human Development Initial Review Group; Biobehavioral and Behavioral Sciences Study Section Behavioral and Behavioral Sciences Study.

Date: March 4, 2022.

Time: 10:00 a.m. to 6:00 p.m.

Agenda: To review and evaluate grant applications.

Place: National Institutes of Health, Eunice Kennedy Shriver National Institute of Child Health and Human Development, 6710B Rockledge Drive, Room 2131A, Bethesda, MD 20892 (Virtual Assisted Meeting)

Contact Person: Clay Mash, Ph.D., Scientific Review Branch, Eunice Kennedy Shriver National Institute of Child Health and Human Development, NIH, 6710B Rockledge Drive, Rm. 2131A, Bethesda, MD 20892, (301) 496–6866, *mashc@mail.nih.gov.*

(Catalogue of Federal Domestic Assistance Program Nos. 93.864, Population Research; 93.865, Research for Mothers and Children;

93.929, Center for Medical Rehabilitation Research; 93.209, Contraception and Infertility Loan Repayment Program, National Institutes of Health, HHS)

Dated: January 5, 2022.

David W. Freeman,

Program Analyst, Office of Federal Advisory Committee Policy.

[FR Doc. 2022–00257 Filed 1–10–22; 8:45 am]

BILLING CODE 4140–01–P

DEPARTMENT OF HEALTH AND HUMAN SERVICES

National Institutes of Health

National Institute of Allergy and Infectious Diseases; Notice of Closed Meeting

Pursuant to section 10(d) of the Federal Advisory Committee Act, as amended, notice is hereby given of the following meeting.

The meeting will be closed to the public in accordance with the provisions set forth in sections 552b(c)(4) and 552b(c)(6), Title 5 U.S.C., as amended. The contract proposals and the discussions could disclose confidential trade secrets or commercial property such as patentable material, and personal information concerning individuals associated with the contract proposals, the disclosure of which would constitute a clearly unwarranted invasion of personal privacy.

Name of Committee: National Institute of Allergy and Infectious Diseases Special Emphasis Panel; NIH/NIAID 102—Genetically Engineered Mice for Pre-clinical Evaluation of HIV Vaccine Candidates (N01).

Date: January 27, 2022

Time: 1:00 p.m. to 3:00 p.m.

Agenda: To review and evaluate contract proposals.

Place: National Institute of Allergy and Infectious Diseases, National Institutes of Health, 5601 Fishers Lane, Room 3G36, Rockville, MD 20892 (Virtual Meeting).

Contact Person: Poonam Pegu, Ph.D., Scientific Review Officer, Scientific Review Program Division of Extramural Activities, National Institute of Allergy and Infectious Diseases, National Institutes of Health, 5601 Fishers Lane, Room 3G36, Rockville, MD 20852, 240–292–0719 *poonam.pegu@nih.gov*.

(Catalogue of Federal Domestic Assistance Program Nos. 93.855, Allergy, Immunology, and Transplantation Research; 93.856, Microbiology and Infectious Diseases Research, National Institutes of Health, HHS)

Dated: January 5, 2022.

Tyeshia M. Roberson-Curtis,

Program Analyst, Office of Federal Advisory Committee Policy.

[FR Doc. 2022–00295 Filed 1–10–22; 8:45 am]

BILLING CODE 4140–01–P

DEPARTMENT OF HEALTH AND HUMAN SERVICES

National Institutes of Health

National Institute of Neurological Disorders and Stroke; Notice of Closed Meetings

Pursuant to section 10(d) of the Federal Advisory Committee Act, as amended, notice is hereby given of the following meetings.

The meetings will be closed to the public in accordance with the provisions set forth in sections 552b(c)(4) and 552b(c)(6), Title 5 U.S.C., as amended. The grant applications and the discussions could disclose confidential trade secrets or commercial property such as patentable material, and personal information concerning individuals associated with the grant applications, the disclosure of which would constitute a clearly unwarranted invasion of personal privacy.

Name of Committee: National Institute of Neurological Disorders and Stroke Special Emphasis Panel; P01 Review.

Date: February 11–15, 2022.

Time: 10:00 a.m. to 5:00 p.m.

Agenda: To review and evaluate grant applications.

Place: National Institutes of Health, Neuroscience Center, 6001 Executive Boulevard, Rockville, MD 20852 (Virtual Meeting).

Contact Person: Li Jia, Ph.D., Scientific Review Officer, Scientific Review Branch, Division of Extramural Activities, NINDS/NIH, 6001 Executive Boulevard, Room 3208D, Rockville, MD 20852, 301–451–2854, *li.jia@nih.gov*.

Name of Committee: National Institute of Neurological Disorders and Stroke Special Emphasis Panel; NINDS DSPAN F99.

Date: February 14–15, 2022.

Time: 8:00 a.m. to 6:00 p.m.

Agenda: To review and evaluate grant applications and/or proposals.

Place: National Institutes of Health, Neuroscience Center, 6001 Executive Boulevard, Rockville, MD 20852 (Virtual Meeting).

Contact Person: Lataisia Cherie Jones, Ph.D., Scientific Review Officer, Scientific Review Branch, Division of Extramural Activities, NINDS/NIH, 6001 Executive Boulevard, Suite 3208, Rockville, MD 20852, 301–496–9223, *lataisia.jones@nih.gov*.

Name of Committee: National Institute of Neurological Disorders and Stroke Special Emphasis Panel; HEAL Initiative: Pain Therapeutics Development (Small Molecules and Biologics).

Date: February 16, 2022.

Time: 10:00 a.m. to 3:00 p.m.

Agenda: To review and evaluate grant applications.

Place: National Institutes of Health, Neuroscience Center, 6001 Executive Boulevard, Rockville, MD 20852 (Virtual Meeting).

Contact Person: Shanta Rajaram, Ph.D., Scientific Review Officer, Scientific Review Branch, Division of Extramural Activities, NINDS/NIH, 6001 Executive Boulevard, Suite 3208, MSC 9529, Bethesda, MD 20892, 301–435–6033, *rajarams@mail.nih.gov*.

(Catalogue of Federal Domestic Assistance Program Nos. 93.853, Clinical Research Related to Neurological Disorders; 93.854, Biological Basis Research in the Neurosciences, National Institutes of Health, HHS)

Dated: January 5, 2022.

Tyeshia M. Roberson-Curtis,

Program Analyst, Office of Federal Advisory Committee Policy.

[FR Doc. 2022–00299 Filed 1–10–22; 8:45 am]

BILLING CODE 4140–01–P

DEPARTMENT OF HEALTH AND HUMAN SERVICES

National Institutes of Health

National Heart, Lung, and Blood Institute; Notice of Meeting

Pursuant to section 10(d) of the Federal Advisory Committee Act, as amended, notice is hereby given of a meeting of the National Heart, Lung, and Blood Advisory Council.

The meeting will be open to the public as indicated below, with attendance limited to space available. Individuals who plan to attend and need special assistance, such as sign language interpretation or other reasonable accommodations, should notify the Contact Person listed below in advance of the meeting.

The meeting will be closed to the public in accordance with the provisions set forth in sections 552b(c)(4) and 552b(c)(6), Title 5 U.S.C., as amended. The grant applications and the discussions could disclose confidential trade secrets or commercial property such as patentable material, and personal information concerning individuals associated with the grant applications, the disclosure of which would constitute a clearly unwarranted invasion of personal privacy.

Name of Committee: National Heart, Lung, and Blood Advisory Council.

Date: February 8, 2022.

Closed: 10:00 a.m. to 10:59 a.m.

Agenda: To Review and Evaluate Grant Applications.

Place: National Institutes of Health, Rockledge II, 6701 Rockledge Drive, Bethesda, MD 20892 (Virtual Meeting).

Open: 11:00 a.m. to 4:00 p.m.

Agenda: To Discuss Program Policies and Issues.

Place: National Institutes of Health, Rockledge II, 6701 Rockledge Drive, Bethesda, MD 20892 (Virtual Meeting).

Virtual Access: The meeting will be videocast and can be accessed from the NIH Videocast. *https://www.nhlbi.nih.gov/about/advisory-and-peer-review-committees/advisory-council.* Please note, the link to the videocast meeting will be posted within a week of the meeting date.

Contact Person: Laura K. Moen, Ph.D., Director Division of Extramural Research Activities, National Heart, Lung, and Blood Institute, National Institutes of Health, 6705 Rockledge Drive, Room 206–Q, Bethesda, MD 20892, 301–827–5517, *moenl@mail.nih.gov.*

Any member of the public interested in presenting oral comments to the committee may notify the Contact Person listed on this notice at least 10 days in advance of the meeting. Interested individuals and representatives of organizations may submit a letter of intent, a brief description of the organization represented, and a short description of the oral presentation. Only one representative of an organization may be allowed to present oral comments and if accepted by the committee, presentations may be limited to five minutes. Both printed and electronic copies are requested for the record. In addition, any interested person may file written comments with the committee by forwarding their statement to the Contact Person listed on this notice. The statement should include the name, address, telephone number and when applicable, the business or professional affiliation of the interested person.

Information is also available on the Institute's/Center's home page: *www.nhlbi.nih.gov/meetings/nhlbac/index.htm,* where an agenda and any additional information for the meeting will be posted when available.

(Catalogue of Federal Domestic Assistance Program Nos. 93.233, National Center for Sleep Disorders Research; 93.837, Heart and Vascular Diseases Research; 93.838, Lung Diseases Research; 93.839, Blood Diseases and Resources Research, National Institutes of Health, HHS)

Dated: January 5, 2022.

David W Freeman,

Program Analyst, Office of Federal Advisory Committee Policy.

[FR Doc. 2022–00253 Filed 1–10–22; 8:45 am]

BILLING CODE 4140–01–P

DEPARTMENT OF HEALTH AND HUMAN SERVICES

National Institutes of Health

National Institute on Alcohol Abuse and Alcoholism; Notice of Closed Meetings

Pursuant to section 10(d) of the Federal Advisory Committee Act, as amended, notice is hereby given of the following meetings.

The meetings will be closed to the public in accordance with the provisions set forth in sections 552b(c)(4) and 552b(c)(6), Title 5 U.S.C., as amended. The grant applications and the discussions could disclose confidential trade secrets or commercial property such as patentable material, and personal information concerning individuals associated with the grant applications, the disclosure of which would constitute a clearly unwarranted invasion of personal privacy.

Name of Committee: National Institute on Alcohol Abuse and Alcoholism, Initial Review Group; Neuroscience and Behavior Study Section.

Date: February 24, 2022.

Time: 10:00 a.m. to 5:00 p.m.

Agenda: To review and evaluate grant applications.

Place: National Institutes of Health, National Institute on Alcohol Abuse and Alcoholism, 6700B Rockledge Drive, Bethesda, MD 20892 (Virtual Meeting).

Contact Person: Beata Buzas, Ph.D., Scientific Review Officer, Extramural Project Review Branch, Office of Extramural Activities, National Institute on Alcohol Abuse and Alcoholism, 6700B Rockledge Drive, Room 2116, MSC 6902, Bethesda, MD 20892, 301–443–0800, *bbuzas@mail.nih.gov.*

Name of Committee: National Institute on Alcohol Abuse and Alcoholism, Initial Review Group; Biomedical Research Study Section.

Date: March 8, 2022.

Time: 10:00 a.m. to 5:00 p.m.

Agenda: To review and evaluate grant applications.

Place: National Institutes of Health, National Institute on Alcohol Abuse and Alcoholism, 6700B Rockledge Drive, Bethesda, MD 20892 (Virtual Meeting).

Contact Person: Philippe Marmillot, Ph.D., Scientific Review Officer, Extramural Project Review Branch, Office of Extramural Activities, National Institute on Alcohol Abuse and Alcoholism, 6700B Rockledge Drive, Room 2118, MSC 6902, Bethesda, MD 20892, 301–443–2861, *marmillotp@mail.nih.gov.*

(Catalogue of Federal Domestic Assistance Program Nos. 93.271, Alcohol Research Career Development Awards for Scientists and Clinicians; 93.272, Alcohol National Research Service Awards for Research Training; 93.273, Alcohol Research Programs; 93.891, Alcohol Research Center Grants; 93.701, ARRA Related Biomedical Research and Research Support Awards., National Institutes of Health, HHS)

Dated: January 6, 2022.

David W. Freeman,

Program Analyst, Office of Federal Advisory Committee Policy.

[FR Doc. 2022–00305 Filed 1–10–22; 8:45 am]

BILLING CODE 4140–01–P

DEPARTMENT OF HEALTH AND HUMAN SERVICES

National Institutes of Health

National Heart, Lung, and Blood Institute; Notice of Closed Meeting

Pursuant to section 10(d) of the Federal Advisory Committee Act, as amended, notice is hereby given of the following meeting.

The meeting will be closed to the public in accordance with the provisions set forth in sections 552b(c)(4) and 552b(c)(6), Title 5 U.S.C., as amended. The grant applications and the discussions could disclose confidential trade secrets or commercial property such as patentable material, and personal information concerning individuals associated with the grant applications, the disclosure of which would constitute a clearly unwarranted invasion of personal privacy.

Name of Committee: Heart, Lung, and Blood Initial Review Group; NHLBI Mentored Clinical and Basic Science Study Section.

Date: February 17–18, 2022.

Time: 10:30 a.m. to 6:30 p.m.

Agenda: To review and evaluate grant applications.

Place: National Heart, Lung and Blood Institute, RKL1, 6705 Rockledge Drive, Bethesda, MD 20817 (Virtual Meeting).

Contact Person: Rajiv Kumar, Ph.D., Chief, Office of Scientific Review/DERA, National Heart, Lung, and Blood Institute, 6705 Rockledge Drive, Bethesda, MD 20892, (301) 827–4612, *rajiv.kumar@nih.gov.*

(Catalogue of Federal Domestic Assistance Program Nos. 93.233, National Center for Sleep Disorders Research; 93.837, Heart and Vascular Diseases Research; 93.838, Lung Diseases Research; 93.839, Blood Diseases and Resources Research, National Institutes of Health, HHS)

Dated: January 6, 2022.

David W. Freeman,

Program Analyst, Office of Federal Advisory Committee Policy.

[FR Doc. 2022–00303 Filed 1–10–22; 8:45 am]

BILLING CODE 4140–01–P

DEPARTMENT OF HEALTH AND HUMAN SERVICES

National Institutes of Health

Center for Scientific Review; Notice of Closed Meetings

Pursuant to section 10(d) of the Federal Advisory Committee Act, as amended, notice is hereby given of the following meetings.

The meetings will be closed to the public in accordance with the provisions set forth in sections

552b(c)(4) and 552b(c)(6), Title 5 U.S.C., as amended. The grant applications and the discussions could disclose confidential trade secrets or commercial property such as patentable material, and personal information concerning individuals associated with the grant applications, the disclosure of which would constitute a clearly unwarranted invasion of personal privacy.

Name of Committee: Biobehavioral and Behavioral Processes Integrated Review Group; Human Complex Mental Function Study Section.
Date: February 3–4, 2022.
Time: 10:00 a.m. to 8:00 p.m.
Agenda: To review and evaluate grant applications.
Place: National Institutes of Health, Rockledge II, 6701 Rockledge Drive, Bethesda, MD 20892 (Virtual Meeting).
Contact Person: Joanna Szczepanik, Ph.D., Scientific Review Officer, Center for Scientific Review, National Institutes of Health, 6701 Rockledge Drive, Room 1000D, Bethesda, MD 20892, (301) 827–2242, *szczepaj@csr.nih.gov*.

Name of Committee: Brain Disorders and Clinical Neuroscience Integrated Review Group; Pathophysiology of Eye Disease—1 Study Section.
Date: February 7–8, 2022.
Time: 8:30 a.m. to 7:00 p.m.
Agenda: To review and evaluate grant applications.
Place: National Institutes of Health, 6701 Rockledge Drive, Bethesda, MD 20892 (Virtual Meeting).
Contact Person: Afia Sultana, Ph.D., Scientific Review Officer, Center for Scientific Review, National Institutes of Health, 6701 Rockledge Drive, Room 4189, Bethesda, MD 20892, (301) 827–7083, *sultanaa@mail.nih.gov*.

Name of Committee: Healthcare Delivery and Methodologies Integrated Review Group; Clinical Management in General Care Settings Study Section.
Date: February 7–8, 2022.
Time: 9:00 a.m. to 7:00 p.m.
Agenda: To review and evaluate grant applications.
Place: National Institutes of Health, Rockledge II, 6701 Rockledge Drive, Bethesda, MD 20892 (Virtual Meeting).
Contact Person: Lauren Fordyce, Ph.D., Scientific Review Officer, Center for Scientific Review, National Institutes of Health, 6701 Rockledge Drive, Room 3214, Bethesda, MD 20892, (301) 435–6998, *fordycelm@mail.nih.gov*.

Name of Committee: Genes, Genomes, and Genetics Integrated Review Group; Prokaryotic Cell and Molecular Biology Study Section.
Date: February 7–8, 2022.
Time: 9:00 a.m. to 8:00 p.m.
Agenda: To review and evaluate grant applications.
Place: National Institutes of Health, Rockledge II, 6701 Rockledge Drive, Bethesda, MD 20892 (Virtual Meeting).
Contact Person: Rebecca C. Burgess, Ph.D., Scientific Review Officer, Center for Scientific Review, 6701 Rockledge Drive, Bethesda, MD 20892, (301) 480–8034, *rebecca.burgess@nih.gov*.

Name of Committee: Cell Biology Integrated Review Group; Development—2 Study Section.
Date: February 7–8, 2022.
Time: 9:00 a.m. to 8:00 p.m.
Agenda: To review and evaluate grant applications.
Place: National Institutes of Health, Rockledge II, 6701 Rockledge Drive, Bethesda, MD 20892 (Virtual Meeting).
Contact Person: Rass M. Shayiq, Ph.D., Scientific Review Officer, Center for Scientific Review, National Institutes of Health, 6701 Rockledge Drive, Room 2182, MSC 7818, Bethesda, MD 20892, (301) 435–2359, *shayiqr@csr.nih.gov*.

Name of Committee: Brain Disorders and Clinical Neuroscience Integrated Review Group; Clinical Neuroscience and Neurodegeneration Study Section.
Date: February 8–9, 2022.
Time: 8:30 a.m. to 7:00 p.m.
Agenda: To review and evaluate grant applications.
Place: National Institutes of Health, 6701 Rockledge Drive, Bethesda, MD 20892 (Virtual Meeting).
Contact Person: Jordan M. Moore, Ph.D., BS Scientific Review Officer, Center for Scientific Review, National Institutes of Health, 6701 Rockledge Drive, Room 1002A1, Bethesda, MD 20892, (301) 451–0293, *jordan.moore@nih.gov*.

Name of Committee: Endocrinology, Metabolism, Nutrition and Reproductive Sciences Integrated Review Group; Cell Signaling and Molecular Endocrinology Study Section.
Date: February 8–9, 2022.
Time: 10:00 a.m. to 8:00 p.m.
Agenda: To review and evaluate grant applications.
Place: National Institutes of Health, Rockledge II, 6701 Rockledge Drive, Bethesda, MD 20892 (Virtual Meeting).
Contact Person: Latha Malaiyandi, Ph.D., Scientific Review Officer, Center for Scientific Review, National Institutes of Health, 6701 Rockledge Drive, Room 812Q, Bethesda, MD 20892, (301) 435–1999, *malaiyandilm@csr.nih.gov*.

Name of Committee: Population Sciences and Epidemiology Integrated Review Group; Neurological, Aging and Musculoskeletal Epidemiology Study Section.
Date: February 9–10, 2022.
Time: 10:00 a.m. to 7:00 p.m.
Agenda: To review and evaluate grant applications.
Place: National Institutes of Health, Rockledge II, 6701 Rockledge Drive, Bethesda, MD 20892 (Virtual Meeting).
Contact Person: Heidi B Friedman, Ph.D., Scientific Review Officer, Center for Scientific Review, National Institutes of Health, 6701 Rockledge Drive, Room 1012A, MSC 7770, Bethesda, MD 20892, 301–435–1721, *hfriedman@csr.nih.gov*.

Name of Committee: Cell Biology Integrated Review Group; Development—1 Study Section.
Date: February 9–10, 2022.
Time: 10:00 a.m. to 8:00 p.m.
Agenda: To review and evaluate grant applications.
Place: National Institutes of Health, Rockledge II, 6701 Rockledge Drive, Bethesda, MD 20892 (Virtual Meeting).
Contact Person: Zubaida Saifudeen, Scientific Review Officer, Center for Scientific Review, National Institutes of Health, 6701 Rockledge Drive, Bethesda, MD 20817, (301) 827–3029, *zubaida.saifudeen@nih.gov*.

Name of Committee: Musculoskeletal, Oral and Skin Sciences Integrated Review Group; Skeletal Biology Development and Disease Study Section.
Date: February 9–11, 2022.
Time: 10:00 a.m. to 8:30 p.m.
Agenda: To review and evaluate grant applications.
Place: National Institutes of Health, Rockledge II, 6701 Rockledge Drive, Bethesda, MD 20892 (Virtual Meeting).
Contact Person: Aruna K Behera, Ph.D., Scientific Review Officer, Center for Scientific Review, National Institutes of Health, 6701 Rockledge Drive, Room 4211, MSC 7814, Bethesda, MD 20892, (301) 435–6809, *beheraak@csr.nih.gov*.

Name of Committee: Center for Scientific Review Special Emphasis Panel; PAR–20–131: Mammalian Models for Translational Research.
Date: February 9, 2022.
Time: 11:00 a.m. to 7:00 p.m.
Agenda: To review and evaluate grant applications.
Place: National Institutes of Health, Rockledge II, 6701 Rockledge Drive, Bethesda, MD 20892 (Virtual Meeting).
Contact Person: Jeffrey Smiley, Ph.D., Scientific Review Officer, Center for Scientific Review, National Institutes of Health, 6701 Rockledge Drive, Room 6194, MSC 7804, Bethesda, MD 20892, 301–272–4596, *smileyja@csr.nih.gov*.

(Catalogue of Federal Domestic Assistance Program Nos. 93.306, Comparative Medicine; 93.333, Clinical Research, 93.306, 93.333, 93.337, 93.393–93.396, 93.837–93.844, 93.846–93.878, 93.892, 93.893, National Institutes of Health, HHS)

Dated: January 5, 2022.

David W Freeman,

Program Analyst, Office of Federal Advisory Committee Policy.

[FR Doc. 2022–00260 Filed 1–10–22; 8:45 am]

BILLING CODE 4140–01–P

DEPARTMENT OF HOMELAND SECURITY

Coast Guard

[Docket No. USCG–2021–0740]

Collection of Information Under Review by Office of Management and Budget; OMB Control Number 1625–0032

AGENCY: Coast Guard, DHS.

ACTION: Thirty-day notice requesting comments.

SUMMARY: In compliance with the Paperwork Reduction Act of 1995 the U.S. Coast Guard is forwarding an Information Collection Request (ICR), abstracted below, to the Office of Management and Budget (OMB), Office of Information and Regulatory Affairs (OIRA), requesting an extension of its approval for the following collection of information: 1625–0032, Vessel Inspection Related Forms and Reporting Requirements; without change. Our ICR describes the information we seek to collect from the public. Review and comments by OIRA ensure we only impose paperwork burdens commensurate with our performance of duties.

DATES: You may submit comments to the Coast Guard and OIRA on or before February 10, 2022.

ADDRESSES: Comments to the Coast Guard should be submitted using the Federal eRulemaking Portal at *https://www.regulations.gov.* Search for docket number [USCG–2021–0740]. Written comments and recommendations to OIRA for the proposed information collection should be sent within 30 days of publication of this notice to *https://www.reginfo.gov/public/do/PRAMain.*

Find this particular information collection by selecting ''Currently under 30-day Review—Open for Public Comments'' or by using the search function.

A copy of the ICR is available through the docket on the internet at *https://www.regulations.gov.* Additionally, copies are available from: COMMANDANT (CG–6P), ATTN: PAPERWORK REDUCTION ACT MANAGER, U.S. COAST GUARD, 2703 MARTIN LUTHER KING JR. AVE SE, STOP 7710, WASHINGTON, DC 20593–7710.

FOR FURTHER INFORMATION CONTACT: A.L. Craig, Office of Privacy Management, telephone 202–475–3528, or fax 202–372–8405, for questions on these documents.

SUPPLEMENTARY INFORMATION:

Public Participation and Request for Comments

This notice relies on the authority of the Paperwork Reduction Act of 1995; 44 U.S.C. 3501 *et seq.,* chapter 35, as amended. An ICR is an application to OIRA seeking the approval, extension, or renewal of a Coast Guard collection of information (Collection). The ICR contains information describing the Collection's purpose, the Collection's likely burden on the affected public, an explanation of the necessity of the Collection, and other important information describing the Collection. There is one ICR for each Collection.

The Coast Guard invites comments on whether this ICR should be granted based on the Collection being necessary for the proper performance of Departmental functions. In particular, the Coast Guard would appreciate comments addressing: (1) The practical utility of the Collection; (2) the accuracy of the estimated burden of the Collection; (3) ways to enhance the quality, utility, and clarity of information subject to the Collection; and (4) ways to minimize the burden of the Collection on respondents, including the use of automated collection techniques or other forms of information technology. These comments will help OIRA determine whether to approve the ICR referred to in this Notice.

We encourage you to respond to this request by submitting comments and related materials. Comments to Coast Guard or OIRA must contain the OMB Control Number of the ICR. They must also contain the docket number of this request, [USCG–2021–0740], and must be received by February 10, 2022.

Submitting Comments

We encourage you to submit comments through the Federal eRulemaking Portal at *https://www.regulations.gov.* If your material cannot be submitted using *https://www.regulations.gov,* contact the person in the **FOR FURTHER INFORMATION CONTACT** section of this document for alternate instructions. Documents mentioned in this notice, and all public comments, are in our online docket at *https://www.regulations.gov* and can be viewed by following that website's instructions. Additionally, if you go to the online docket and sign up for email alerts, you will be notified when comments are posted.

We accept anonymous comments. All comments to the Coast Guard will be posted without change to *https://www.regulations.gov* and will include any personal information you have provided. For more about privacy and submissions to the Coast Guard in response to this document, see DHS's eRulemaking System of Records notice (85 FR 14226, March 11, 2020). For more about privacy and submissions to OIRA in response to this document, see the *https://www.reginfo.gov,* comment-submission web page. OIRA posts its decisions on ICRs online at *https://www.reginfo.gov/public/do/PRAMain* after the comment period for each ICR. An OMB Notice of Action on each ICR will become available via a hyperlink in the OMB Control Number: 1625–0032.

Previous Request for Comments

This request provides a 30-day comment period required by OIRA. The Coast Guard published the 60-day notice (86 FR 54991, October 5, 2021) required by 44 U.S.C. 3506(c)(2). That notice elicited no comments. Accordingly, no changes have been made to the Collection.

Information Collection Request

Title: Vessel Inspection Related Forms and Reporting Requirements Under Title 46 U.S. Code.

OMB Control Number: 1625–0032.

Summary: This collection of information requires owners, operators, agents or masters of certain inspected vessels to obtain and/or post various forms as part of the Coast Guard's Commercial Vessel Safety Program.

Need: The Coast Guard's Commercial Vessel Safety Program regulations are found in 46 CFR, including parts 2, 26, 31, 71, 91, 107, 115, 126, 169, 176 and 189, as authorized in Title 46 U.S. Code. A number of reporting and recordkeeping requirements are contained therein.

Forms:

- CG–841, Certificate of Inspection
- CG–854, Temporary Certificate of Inspection
- CG–948, Permit to Proceed to Another Port for Repairs
- CG–949, Permit to Carry Excursion Party
- CG–950, Application for Permit to Carry Excursion Party
- CG–950A, Application for Special Permit
- CG–2832, Vessel Inspection Record

Respondents: Owners, operators, agents and masters of vessels.

Frequency: On occasion.

Hour Burden Estimate: The estimated burden has decreased from 1,705 hours to 735 hours a year, due to change in the estimated time for respondents to complete certain recordkeeping tasks.

Authority: The Paperwork Reduction Act of 1995; 44 U.S.C. *et seq.,* chapter 35, as amended.

Dated: December 9, 2021.

Kathleen Claffie,

Chief, Office of Privacy Management, U.S. Coast Guard.

[FR Doc. 2022–00297 Filed 1–10–22; 8:45 am]

BILLING CODE 9110–04–P

DEPARTMENT OF HOMELAND SECURITY

Coast Guard

[Docket No. USCG–2021–0741]

Collection of Information Under Review by Office of Management and Budget; OMB Control Number 1625–0036

AGENCY: Coast Guard, DHS.

ACTION: Thirty-day notice requesting comments.

SUMMARY: In compliance with the Paperwork Reduction Act of 1995 the U.S. Coast Guard is forwarding an Information Collection Request (ICR), abstracted below, to the Office of Management and Budget (OMB), Office of Information and Regulatory Affairs (OIRA), requesting an extension of its approval for the following collection of information: 1625–0036, Plan Approval and Records for U.S. and Foreign Tank Vessels Carrying Oil in Bulk; without change. Our ICR describes the information we seek to collect from the public. Review and comments by OIRA ensure we only impose paperwork burdens commensurate with our performance of duties.

DATES: You may submit comments to the Coast Guard and OIRA on or before February 10, 2022.

ADDRESSES: Comments to the Coast Guard should be submitted using the Federal eRulemaking Portal at *https://www.regulations.gov.* Search for docket number [USCG–2021–0741]. Written comments and recommendations to OIRA for the proposed information collection should be sent within 30 days of publication of this notice to *https://www.reginfo.gov/public/do/PRAMain.*

Find this particular information collection by selecting ''Currently under 30-day Review—Open for Public Comments'' or by using the search function.

A copy of the ICR is available through the docket on the internet at *https://www.regulations.gov.* Additionally, copies are available from: COMMANDANT (CG–6P), ATTN: PAPERWORK REDUCTION ACT MANAGER, U.S. COAST GUARD, 2703 MARTIN LUTHER KING JR. AVE. SE, STOP 7710, WASHINGTON, DC 20593–7710.

FOR FURTHER INFORMATION CONTACT: A.L. Craig, Office of Privacy Management, telephone 202–475–3528, or fax 202–372–8405, for questions on these documents.

SUPPLEMENTARY INFORMATION:

Public Participation and Request for Comments

This notice relies on the authority of the Paperwork Reduction Act of 1995; 44 U.S.C. 3501 *et seq.,* chapter 35, as amended. An ICR is an application to OIRA seeking the approval, extension, or renewal of a Coast Guard collection of information (Collection). The ICR contains information describing the Collection's purpose, the Collection's likely burden on the affected public, an explanation of the necessity of the Collection, and other important information describing the Collection. There is one ICR for each Collection.

The Coast Guard invites comments on whether this ICR should be granted based on the Collection being necessary for the proper performance of Departmental functions. In particular, the Coast Guard would appreciate comments addressing: (1) The practical utility of the Collection; (2) the accuracy of the estimated burden of the Collection; (3) ways to enhance the quality, utility, and clarity of information subject to the Collection; and (4) ways to minimize the burden of the Collection on respondents, including the use of automated collection techniques or other forms of information technology. These comments will help OIRA determine whether to approve the ICR referred to in this Notice.

We encourage you to respond to this request by submitting comments and related materials. Comments to Coast Guard or OIRA must contain the OMB Control Number of the ICR. They must also contain the docket number of this request, [USCG–2021–0741], and must be received by February 10, 2022.

Submitting Comments

We encourage you to submit comments through the Federal eRulemaking Portal at *https://www.regulations.gov.* If your material cannot be submitted using *https://www.regulations.gov,* contact the person in the **FOR FURTHER INFORMATION CONTACT** section of this document for alternate instructions. Documents mentioned in this notice, and all public comments, are in our online docket at *https://www.regulations.gov* and can be viewed by following that website's instructions. Additionally, if you go to the online docket and sign up for email alerts, you will be notified when comments are posted.

We accept anonymous comments. All comments to the Coast Guard will be posted without change to *https://www.regulations.gov* and will include any personal information you have provided. For more about privacy and submissions to the Coast Guard in response to this document, see DHS's eRulemaking System of Records notice (85 FR 14226, March 11, 2020). For more about privacy and submissions to OIRA in response to this document, see the *https://www.reginfo.gov,* comment-submission web page. OIRA posts its decisions on ICRs online at *https://www.reginfo.gov/public/do/PRAMain* after the comment period for each ICR. An OMB Notice of Action on each ICR will become available via a hyperlink in the OMB Control Number: 1625–0036.

Previous Request for Comments

This request provides a 30-day comment period required by OIRA. The Coast Guard published the 60-day notice (86 FR 54993, October 5, 2021) required by 44 U.S.C. 3506(c)(2). That notice elicited no comments. Accordingly, no changes have been made to the Collection.

Information Collection Request

Title: Plan Approval and Records for U.S. and Foreign Tank Vessels Carrying Oil in Bulk.

OMB Control Number: 1625–0036.

Summary: This information collection aids the Coast Guard in determining if a vessel complies with certain safety and environmental protection standards. Plans, to include records, for construction or modification of U.S. or foreign vessels submitted and maintained on board are required for compliance with these standards.

Need: Title 46 U.S. Code 3703 provides the Coast Guard with the authority to regulate design, construction, alteration, repair, maintenance, operation, equipping, personnel qualification, and manning of vessels carrying oil in bulk. See *e.g.,* 33 CFR part 157, Rules for the Protection of the Marine Environment Relating to Tank Vessels Carrying Oil in Bulk, and 46 CFR Subchapter D, Tank Vessels.

Forms: None.

Respondents: Owners and operators of vessels.

Frequency: On occasion.

Hour Burden Estimate: The estimated burden has increased from 2,109 hours to 2,497 hours a year, due to an increase in the estimated number of respondents.

Authority: The Paperwork Reduction Act of 1995; 44 U.S.C. *et seq.,* chapter 35, as amended.

Dated: December 9, 2021.

Kathleen Claffie,

Chief, Office of Privacy Management, U.S. Coast Guard.

[FR Doc. 2022–00298 Filed 1–10–22; 8:45 am]

BILLING CODE 9110–04–P

DEPARTMENT OF HOMELAND SECURITY

[Docket No. CISA–2021–0021]

Notice of President's National Security Telecommunications Advisory Committee Meeting

AGENCY: Cybersecurity and Infrastructure Security Agency (CISA), Department of Homeland Security (DHS).

ACTION: Notice of Federal Advisory Committee Act (FACA) meeting; request for comments.

SUMMARY: CISA is publishing this notice to announce the following President's National Security Telecommunications Advisory Committee (NSTAC) meeting. This meeting will be open to the public.

DATES:

Meeting Registration: Registration to attend the meeting is required and must be received no later than 5:00 p.m. Eastern Time (ET) on February 21, 2022. For more information on how to participate, please contact *NSTAC@cisa.dhs.gov.*

Speaker Registration: Registration to speak during the meeting's public comment period must be received no later than 5:00 p.m. ET on February 21, 2022.

Written Comments: Written comments must be received no later than 5:00 p.m. ET on February 21, 2022.

Meeting Date: The NSTAC will meet on February 23, 2022, from 2:00 p.m. to 3:00 p.m. ET. The meeting may close early if the committee has completed its business.

ADDRESSES: The meeting will be held via conference call. For access to the conference call bridge, information on services for individuals with disabilities, or to request special assistance, please email *NSTAC@cisa.dhs.gov* by 5:00 p.m. ET on February 21, 2022.

Comments: Members of the public are invited to provide comment on the issues that will be considered by the committee as listed in the **SUPPLEMENTARY INFORMATION** section below. Associated materials that may be discussed during the meeting will be made available for review at *https://www.cisa.gov/nstac* on February 10, 2022. Comments may be submitted by 5:00 p.m. ET on February 21, 2022 and must be identified by Docket Number CISA–2021–0021. Comments may be submitted by one of the following methods:

- *Federal eRulemaking Portal: www.regulations.gov.* Please follow the instructions for submitting written comments.
- *Email: NSTAC@cisa.dhs.gov.* Include the Docket Number CISA–2021–0021 in the subject line of the email.

Instructions: All submissions received must include the words ''Department of Homeland Security'' and the Docket Number for this action. Comments received will be posted without alteration to *www.regulations.gov,* including any personal information provided.

Docket: For access to the docket and comments received by the NSTAC, please go to *www.regulations.gov* and enter docket number CISA–2021–0021.

A public comment period is scheduled to be held during the meeting from 2:25 p.m. to 2:35 p.m. ET. Speakers who wish to participate in the public comment period must email *NSTAC@cisa.dhs.gov* to register. Speakers should limit their comments to three minutes and will speak in order of registration. Please note that the public comment period may end before the time indicated, following the last request for comments.

FOR FURTHER INFORMATION CONTACT: Rachel Liang, 202–963–8300, *NSTAC@cisa.dhs.gov.*

SUPPLEMENTARY INFORMATION: The NSTAC is established under the authority of Executive Order (E.O.) 12382, dated September 13, 1982, as amended by E.O. 13286, continued and amended under the authority of E.O. 14048, dated September 30, 2021. Notice of this meeting is given under FACA, 5 U.S.C. Appendix (Pub. L. 92–463). The NSTAC advises the President on matters related to national security and emergency preparedness (NS/EP) telecommunications and cybersecurity policy.

Agenda: The NSTAC will hold a conference call on Wednesday, February 23, 2022, to discuss current NSTAC activities and the Government's ongoing cybersecurity and NS/EP communications initiatives. Since the November 2021 NSTAC Meeting, the NSTAC has been tasked with developing a study focused on enhancing U.S. competitiveness in international standards. The study will focus on how government and industry work together to preserve the widespread use of the industry-driven model and at the same time enhance U.S. competitiveness and provide recommendations on how to ensure security in global standards. The tasking and associated letter will be discussed during the February 2022 conference call. This meeting is open to the public and will include: (1) Remarks from the Administration and CISA leadership on salient NS/EP and cybersecurity efforts; (2) a status update from the NSTAC Information Technology and Operational Technology Convergence Subcommittee; (3) a deliberation and vote on the *NSTAC Report to the President on Zero-Trust and Trusted Identity Management;* and (4) a discussion on the new tasking on international standards.

Rachel Liang,

Alternate Designated Federal Officer, NSTAC, Cybersecurity and Infrastructure Security Agency, Department of Homeland Security.

[FR Doc. 2022–00278 Filed 1–10–22; 8:45 am]

BILLING CODE 9110–9P–P

DEPARTMENT OF THE INTERIOR

National Park Service

[NPS–WASO–NRNHL–DTS#–33243; PPWOCRADI0, PCU00RP14.R50000]

National Register of Historic Places; Notification of Pending Nominations and Related Actions

AGENCY: National Park Service, Interior.

ACTION: Notice.

SUMMARY: The National Park Service is soliciting electronic comments on the significance of properties nominated before January 1, 2022, for listing or related actions in the National Register of Historic Places.

DATES: Comments should be submitted electronically by January 26, 2022.

ADDRESSES: Comments are encouraged to be submitted electronically to *National_Register_Submissions@nps.gov* with the subject line ''Public Comment on <property or proposed district name, (County) State>.'' If you have no access to email you may send them via U.S. Postal Service and all other carriers to the National Register of Historic Places, National Park Service, 1849 C Street NW, MS 7228, Washington, DC 20240.

FOR FURTHER INFORMATION CONTACT: Sherry A. Frear, Chief, National Register of Historic Places/National Historic Landmarks Program, 1849 C Street NW, MS 7228, Washington, DC 20240, *sherry_frear@nps.gov,* 202–913–3763.

SUPPLEMENTARY INFORMATION: The properties listed in this notice are being considered for listing or related actions in the National Register of Historic Places. Nominations for their consideration were received by the National Park Service before January 1, 2022. Pursuant to Section 60.13 of 36 CFR part 60, comments are being accepted concerning the significance of the nominated properties under the National Register criteria for evaluation.

Before including your address, phone number, email address, or other personal identifying information in your comment, you should be aware that your entire comment—including your personal identifying information—may be made publicly available at any time. While you can ask us in your comment to withhold your personal identifying information from public review, we cannot guarantee that we will be able to do so.

Nominations submitted by State or Tribal Historic Preservation Officers:

ARIZONA

Pima County

Orchard River Garden Park, 5701 East Glenn St., Tucson, SG100007418

NEW YORK

Allegany County

Reynolds House, The, 56 West University St., Alfred, SG100007412

Jefferson County

Thousand Island Park Historic District (Boundary Increase/Decrease), Generally bounded by Coast Ave. East, Coast Ave. West, Prospect Ave., Park Ave., and Sunset Ave., Thousand Island Park, BC100007414

Lewis County

Basselin House, 9757 NY 812, Croghan, SG100007408

New York County

Wald, Lillian, House, 265 and 267 Henry St., New York, SG100007409

Mary McLeod Bethune Gardens, 1945 Amsterdam Ave., Manhattan, SG100007411

OHIO

Cuyahoga County

Euclid Avenue Christian Church, (Twentieth-Century African American Civil Rights Movement in Ohio MPS), 9990 Euclid Ave., Cleveland, MP100007415

Hamilton County

Dombar, Benjamin, House and Studio, 601 West Galbraith Rd., Cincinnati, SG100007410

PENNSYLVANIA

Allegheny County

Western State Penitentiary-Riverside Penitentiary, 3001 New Beaver Ave., Pittsburgh, SG100007417

SOUTH DAKOTA

Davison County

Mount Vernon City Auditorium, (Federal Relief Construction in South Dakota MPS), Main St. and East 1st Ave., Mount Vernon, MP100007416

Additional documentation has been received for the following resource:

NEW YORK

Jefferson County

Thousand Island Park Historic District (Additional Documentation), Generally bounded by Coast Ave. East, Coast Ave. West, Prospect Ave., Park Ave., and Sunset Ave., Thousand Island Park, AD82001177

Authority: Section 60.13 of 36 CFR part 60.

Dated: January 1, 2022.

Sherry A. Frear,

Chief, National Register of Historic Places/National Historic Landmarks Program.

[FR Doc. 2022–00250 Filed 1–10–22; 8:45 am]

BILLING CODE 4312–52–P

INTERNATIONAL TRADE COMMISSION

[Investigation No. 337–TA–1216]

Certain Vacuum Insulated Flasks and Components Thereof; Commission Final Determination of Violation of Section 337; Issuance of a General Exclusion Order; Termination of Investigation

AGENCY: U.S. International Trade Commission.

ACTION: Notice.

SUMMARY: Notice is hereby given that the U.S. International Trade Commission has determined that there is a violation of section 337 of the Tariff Act of 1930, as amended, in the above-captioned investigation. The Commission has issued a general exclusion order (''GEO'') barring entry of certain vacuum insulated flasks and components thereof that infringe the patents and the trademarks asserted in this investigation. The Commission has terminated this investigation.

FOR FURTHER INFORMATION CONTACT: Michael Liberman, Esq., Office of the General Counsel, U.S. International Trade Commission, 500 E Street SW, Washington, DC 20436, telephone (202) 205–2392. Copies of non-confidential documents filed in connection with this investigation may be viewed on the Commission's electronic docket (EDIS) at *https://edis.usitc.gov.* For help accessing EDIS, please email *EDIS3Help@usitc.gov.* General information concerning the Commission may also be obtained by accessing its internet server at *https://www.usitc.gov.* Hearing-impaired persons are advised that information on this matter can be obtained by contacting the Commission's TDD terminal on (202) 205–1810.

SUPPLEMENTARY INFORMATION: On September 3, 2020, the Commission instituted this investigation under section 337 of the Tariff Act of 1930, as amended, 19 U.S.C. 1337 (''section 337''), based on a complaint filed by Steel Technology LLC d/b/a Hydro Flask and Helen of Troy Limited (collectively, ''Complainants'' or ''Hydro Flask''). 85 FR 55030–31 (Sept. 3, 2020). The complaint alleges a violation of section 337 in the importation into the United States, the sale for importation, or the sale within the United States after importation of certain vacuum insulated flasks and components thereof by reason of infringement of: (1) The sole claims of U.S. Design Patent Nos. D806,468 (''the D'468 patent''); D786,012 (''the D'012 patent''); and D799,320 (''the D'320 patent''), respectively; and (2) U.S. Trademark Registration Nos. 4,055,784 (''the '784 trademark''); 5,295,365 (''the '365 trademark''); 5,176,888 (''the '888 trademark''); and 4,806,282 (''the '282 trademark''). The complaint also alleges the existence of a domestic industry. The notice of investigation names numerous respondents: Cangnan Kaiyisi E-Commerce Technology Co., Ltd.; Shenzhen Huichengyuan Technology Co., Ltd.; Sinbada Impex Co., Ltd.; Yongkang Huiyun Commodity Co., Ltd.; Wuyi Loncin Bottle Co., Ltd.; Zhejiang Yuchuan Industry & Trade Co., Ltd.; Zhejiang Yongkang Unique Industry & Trade Co., Ltd.; Suzhou Prime Gifts Co., Ltd.; Hangzhou Yuehua Technology Co., Ltd.; Guangzhou Yawen Technology Co., Ltd.; Jinhua City Ruizhi E-Commerce Co., Ltd.; Wo Ma Te (Tianjin) International Trade Co., Ltd.; and Shenzhen City Yaxin General Machinery Co., Ltd. (collectively, the ''Defaulting Respondents''); Eddie Bauer, LLC; PSEB Holdings, LLC; Dunhuang Group a.k.a. DHgate; Everich and Tomic Houseware Co., Ltd.; HydroFlaskPup; Yiwu Honglu Daily Necessities Co., Ltd.; and Yiwu Houju E-commerce Firm. The Commission's Office of Unfair Import Investigations (''OUII'') is also named as a party in this investigation. *Id.*

Subsequently, the Commission permitted Hydro Flask to amend the complaint and notice of investigation to: (1) Assert the D'012 patent against additional infringing products; (2) incorporate into the complaint the information and additional paragraphs included in Complainants' Supplemental Letter to the Commission of August 18, 2020; and (3) correct the corporate names of four non-appearing respondents—Yiwu Houju E-Commerce Firm; Jinhua City Ruizhi E-Commerce Co., Ltd.; Wo Ma Te (Tianjin) International Trade Co., Ltd.; and

Shenzhen City Yaxin General Machinery Co., Ltd. Mot. at 1. Order No. 12 (Nov. 6, 2020), *unreviewed by* Notice (Nov. 24, 2020); *see* 85 FR 77239–40 (Dec. 1, 2020). The Commission terminated the investigation as to the following respondents based on consent orders and/or settlement agreements: Eddie Bauer LLC and PSEB Holdings, LLC; DHgate; Everich and Tomic Houseware Co., Ltd. Order No. 13 (Nov. 30, 2020), *unreviewed by* Notice (Dec. 21, 2020); Order No. 17 (Jan. 27, 2021), *unreviewed by* Notice (Feb. 16, 2021); Order No. 19 (Feb. 22, 2021), *unreviewed by* Notice (Mar. 12, 2021). The Commission also terminated the investigation with respect to the '282 trademark. Order No. 16 (Jan. 11, 2021), *unreviewed by* Notice (Feb. 8, 2021).

On April 14, 2021, the Commission found the Defaulting Respondents in default. Order No. 21 (Mar. 22, 2021), *unreviewed* by Notice (Apr. 14, 2021). The Commission also permitted Hydro Flask to withdraw the amended complaint as to the remaining respondents: HydroFlaskPup, Yiwu Honglu Daily Necessities Co., Ltd., and Yiwu Houju E-commerce Firm. Order No. 22 (Apr. 7, 2021), *unreviewed by* Notice (Apr. 22, 2021).

On April 8, 2021, Hydro Flask filed a motion for summary determination of a violation of section 337 pursuant to Commission Rules 210.16(c)(2), 210.18 (19 CFR 210.16(c)(2), 210.18) to support its request for entry of a GEO with respect to all asserted patents and trademarks. On August 9, 2021, OUII filed a response in support of the motion.

On September 3, 2021, the presiding chief administrative law judge (''CALJ'') issued an initial determination (''ID'') granting in part Hydro Flask's motion for summary determination. The ID finds that Hydro Flask has shown by reliable, probative, and substantial evidence that a violation of section 337 has occurred with respect to the '784, '365, and '888 trademarks, and the D'468, D'012, and D'320 patents, and that the domestic industry requirement is satisfied for the infringed trademarks and patents. The ID finds that a violation has been established with respect to ten out of thirteen defaulting respondents: Cangnan Kaiyisi E-Commerce Technology Co., Ltd.; Yongkang Huiyun Commodity Co., Ltd.; Wuyi Loncin Bottle Co., Ltd.; Zhejiang Yongkang Unique Industry & Trade Co., Ltd.; Suzhou Prime Gifts Co., Ltd.; Hangzhou Yuehua Technology Co., Ltd.; Guangzhou Yawen Technology Co., Ltd.; Jinhua City Ruizhi E-Commerce Co., Ltd.; Wo Ma Te (Tianjin) International Trade Co., Ltd.; and Shenzhen City Yaxin General Machinery Co., Ltd. The ID also finds that no violation has been established as to respondents Shenzhen Huichengyuan Technology Co., Ltd.; Sinbada Impex Co., Ltd.; and Zhejiang Yuchuan Industry & Trade Co., Ltd.

The ID contains the CALJ's recommended determination on remedy and bonding (''RD''). The RD recommends issuance of a GEO with respect to the asserted patents and trademarks. The RD does not recommend issuance of any cease and desist orders. No petitions for review were filed.

The Commission determined to review the subject ID in part. *See* 86 FR 59424–26 (Oct. 27, 2021). Specifically, the Commission determined to review the ID's finding that Hydro Flask has satisfied the economic prong of the domestic industry requirement under section 337(a)(3)(A). *Id.; see* ID at 89–92. On review, the Commission affirmed the ID's finding that Hydro Flask has established a domestic industry under section 337(a)(3)(A). *Id.* The Commission also requested written submissions on remedy, the public interest, and bonding. *Id.*

On November 4, 2021, Complainants and OUII filed their opening written submissions on remedy, the public interest, and bonding. On November 12, 2021, OUII filed its responsive written submission. No other submissions were received by the Commission.

Having reviewed the submissions filed in response to the Commission request for briefing and the evidentiary record, the Commission has determined that the appropriate form of relief in this investigation is a GEO prohibiting the unlicensed importation of certain vacuum insulated flasks and components thereof that infringe the sole claims of the D'468, D'012, and D'320 patents and the '784, '365, and '888 trademarks.

The Commission has further determined that the public interest factors enumerated in subsection (d)(1) (19 U.S.C. 1337(d)(1)) do not preclude issuance of the above-referenced remedial order. Finally, the Commission has determined that a bond in the amount of one hundred (100) percent of the entered value is required to permit temporary importation of the articles in question during the period of Presidential review (19 U.S.C. 1337(j)). The investigation is terminated.

The Commission's order and the record upon which it based its determination were delivered to the President and to the United States Trade Representative on the day of their issuance. The Commission has also notified the Secretary of the Treasury of the order.

The authority for the Commission's determination is contained in section 337 of the Tariff Act of 1930, as amended, 19 U.S.C. 1337, and in part 210 of the Commission's Rules of Practice and Procedure, 19 CFR part 210.

The Commission vote for this determination took place on January 5, 2022.

By order of the Commission.

Issued: January 5, 2022.

Lisa Barton,

Secretary to the Commission.

[FR Doc. 2022–00281 Filed 1–10–22; 8:45 am]

BILLING CODE 7020–02–P

DEPARTMENT OF JUSTICE

Drug Enforcement Administration

[Docket No. DEA–939]

Bulk Manufacturer of Controlled Substances Application: Curia Missouri Inc.

AGENCY: Drug Enforcement Administration, Justice.

ACTION: Notice of application.

SUMMARY: Curia Missouri Inc. has applied to be registered as a bulk manufacturer of basic class(es) of controlled substance(s). Refer to Supplemental Information listed below for further drug information.

DATES: Registered bulk manufacturers of the affected basic class(es), and applicants therefore, may file written comments on or objections to the issuance of the proposed registration on or before March 14, 2022. Such persons may also file a written request for a hearing on the application on or before March 14, 2022.

ADDRESSES: Written comments should be sent to: Drug Enforcement Administration, Attention: DEA Federal Register Representative/DPW, 8701 Morrissette Drive, Springfield, Virginia 22152.

SUPPLEMENTARY INFORMATION: In accordance with 21 CFR 1301.33(a), this is notice that on August 19, 2021, Curia Missouri Inc., 2460 West Bennett Street, Springfield, Missouri 65807, applied to be registered as a bulk manufacturer of the following basic class(es) of controlled substance(s):

Controlled substance	Drug code	Schedule
Gamma Hydroxybutyric Acid.	2010	I

Controlled substance	Drug code	Schedule
Amphetamine ...	1100	II
Lisdexamphetamine.	1205	II
Methylphenidate	1724	II
Phenylacetone ..	8501	II
Tapentadol	9780	II

The company plans to bulk manufacture the above-listed controlled substances in bulk for distribution to its customers. No other activities for these drug codes are authorized for this registration.

Brian S. Besser,

Acting Assistant Administrator.

[FR Doc. 2022–00325 Filed 1–10–22; 8:45 am]

BILLING CODE P

DEPARTMENT OF JUSTICE

Drug Enforcement Administration

[Docket No. DEA–942]

Bulk Manufacturer of Controlled Substances Application: Johnson Matthey, Inc.

AGENCY: Drug Enforcement Administration, Justice.

ACTION: Notice of application.

SUMMARY: Johnson Matthey, Inc., has applied to be registered as a bulk manufacturer of basic class(es) of controlled substance(s). Refer to Supplemental Information listed below for further drug information.

DATES: Registered bulk manufacturers of the affected basic class(es), and applicants therefore, may file written comments on or objections to the issuance of the proposed registration on or before March 14, 2022. Such persons may also file a written request for a hearing on the application on or before March 14, 2022.

ADDRESSES: Written comments should be sent to: Drug Enforcement Administration, Attention: DEA Federal Register Representative/DPW, 8701 Morrissette Drive, Springfield, Virginia 22152.

SUPPLEMENTARY INFORMATION: In accordance with 21 CFR 1301.33(a), this is notice that on November 2, 2021, Johnson Matthey, Inc., 2003 Nolte Drive West Deptford, New Jersey 08066–1742, applied to be registered as a bulk manufacturer of the following basic class(es) of controlled substance(s):

Controlled Substance	Drug Code	Schedule
Gamma Hydroxybutyric Acid ..	2010	I
Marihuana	7360	I
Tetrahydrocannabinols	7370	I
Noroxymorphone	9145	I
Difenoxin	9168	I
Amphetamine	1100	II
Methamphetamine	1105	II
Lisdexamfetamine	1205	II
Methylphenidate	1724	II
Nabilone	7379	II
4-Anilino-N-Phenethyl-4-Piperidine (ANPP).	8333	II
Norfentanyl	8366	II
Cocaine	9041	II
Codeine	9050	II
Dihydrocodeine	9120	II
Oxycodone	9143	II
Hydromorphone	9150	II
Diphenoxylate	9170	II
Ecgonine	9180	II
Hydrocodone	9193	II
Levorphanol	9220	II
Meperidine	9230	II
Methadone	9250	II
Methadone intermediate	9254	II
Morphine	9300	II
Thebaine	9333	II
Opium tincture	9630	II
Oxymorphone	9652	II
Noroxymorphone	9668	II
Alfentanil	9737	II
Remifentanil	9739	II
Sufentanil	9740	II
Tapentadol	9780	II
Fentanyl	9801	II

The company plans to bulk manufacture the listed controlled substances for the internal use intermediates or for sale to its customers. In reference to drug codes 7360 (Marihuana), and 7370 (Tetrahydrocannabinols), the company plans to bulk manufacture these drugs as synthetic. The company plans to bulk manufacture for either internal usage as intermediates or to sale to customers as Active Pharmaceutical Ingredients (API). No other activities for these drug codes are authorized for this registration.

Brian S. Besser,

Acting Assistant Administrator.

[FR Doc. 2022–00326 Filed 1–10–22; 8:45 am]

BILLING CODE P

DEPARTMENT OF JUSTICE

Drug Enforcement Administration

[Docket No. DEA–944]

Importer of Controlled Substances Application: Nexus Pharmaceuticals, Inc.

AGENCY: Drug Enforcement Administration, Justice.

ACTION: Notice of application.

SUMMARY: Nexus Pharmaceuticals, Inc. has applied to be registered as an importer of basic class(es) of controlled substance(s). Refer to Supplemental Information listed below for further drug information.

DATES: Registered bulk manufacturers of the affected basic class(es), and applicants therefore, may file written comments on or objections to the issuance of the proposed registration on or before February 10, 2022. Such persons may also file a written request for a hearing on the application on or before February 10, 2022.

ADDRESSES: Written comments should be sent to: Drug Enforcement Administration, Attention: DEA Federal Register Representative/DPW, 8701 Morrissette Drive, Springfield, Virginia 22152. All requests for a hearing must be sent to: Drug Enforcement Administration, Attn: Administrator, 8701 Morrissette Drive, Springfield, Virginia 22152. All requests for a hearing should also be sent to: (1) Drug Enforcement Administration, Attn: Hearing Clerk/OALJ, 8701 Morrissette Drive, Springfield, Virginia 22152; and (2) Drug Enforcement Administration, Attn: DEA Federal Register Representative/DPW, 8701 Morrissette Drive, Springfield, Virginia 22152.

SUPPLEMENTARY INFORMATION: In accordance with 21 CFR 1301.34(a), this is notice that on October 25, 2021, Nexus Pharmaceuticals, Inc., 10300 128th Avenue, Pleasant Prairie, Wisconsin 53158–7338, applied to be registered as an importer of the following basic class(es) of controlled substance(s):

Controlled substance	Drug code	Schedule
Remifentanil	9739	I

The company plans to import the listed controlled substance for research and analytical testing purposes. Approval of permit applications will occur only when the registrant's business activity is consistent with what is authorized under 21 U.S.C. 952(a)(2). Authorization will not extend to the import of Food and Drug Administration-approved or non-approved finished dosage forms for commercial sale. No other activity for this drug code is authorized for this registration.

Brian S. Besser,

Acting Assistant Administrator.

[FR Doc. 2022–00329 Filed 1–10–22; 8:45 am]

BILLING CODE P

DEPARTMENT OF JUSTICE

[CPCLO Order No. 01–2022]

Privacy Act of 1974; Systems of Records

AGENCY: Justice Management Division, United States Department of Justice.

ACTION: Notice of a modified system of records.

SUMMARY: Pursuant to the Privacy Act of 1974 and Office of Management and Budget (OMB) Circular No. A–108, notice is hereby given that the Justice Management Division (JMD), a component within the United States Department of Justice (DOJ or Department), proposes to modify a system of records notice titled ''DOJ Personnel Public Health Emergency Records System,'' JUSTICE/JMD–025. The component proposes to modify the system of records notice to explicitly encompass collection of records related to requests for exceptions from public health emergency mandates, as well as clarify the definition of Department personnel to specifically include individuals on assignment to the Department from local, state, tribal or territorial agencies.

DATES: This notice is effective upon publication, subject to a 30-day period in which to comment on the routine uses, described below. Therefore, please submit any comments by February 10, 2022.

ADDRESSES: The public, OMB, and Congress are invited to submit any comments by mail to the United States Department of Justice, Office of Privacy and Civil Liberties, ATTN: Privacy Analyst, (2Con), 145 N Street NE, Suite 300, Washington, DC 20530; by facsimile at 202–307–0693; or by email at *privacy.compliance@usdoj.gov.* To ensure proper handling, please reference the above CPCLO Order No. on your correspondence.

FOR FURTHER INFORMATION CONTACT: Arthur E. Gary, Deputy Assistant Attorney General, Policy, Management, and Procurement, 950 Pennsylvania Avenue NW, Washington, DC 20530–0001, (202) 514–3101.

SUPPLEMENTARY INFORMATION: This system of records covers information necessary and relevant to Department activities responding to and mitigating the COVID–19 pandemic and other high-consequence public health threats, and diseases or illnesses relating to a public health emergency. Such information may include information pertaining to Department personnel, including employees, interns, contractors, and other personnel assigned to Department components such as Task Force Officers and other detailees, relating to efforts to protect the Department's workforce from contracting the illness or disease that is the subject of a declared public health emergency. The information may also pertain to personnel who undergo preventative testing for, or receive a vaccination to prevent, a disease or illness that is the subject of a declared public health emergency, as well as information necessary to implement federal, state, or local mandates relating to a public health emergency, including requests for legally required exceptions such as those based on religious or medical considerations. The information collected may include identifying and contact information of individuals who have been suspected or confirmed to have contracted a disease or illness, or who have been exposed to an individual who had been suspected or confirmed to have contracted a disease or illness related to a declared public health emergency; individual circumstances and dates of suspected exposure; testing results, symptoms, and treatments; vaccination records; health status information; and other information necessary and relevant to Department activities responding to and mitigating COVID–19 and other high-consequence public health threats and diseases or illnesses relating to a public health emergency. The Department maintains this information to understand the impact of an illness or disease on the Department workforce, and to assist in reducing the spread of the disease or illness among Department personnel. In certain instances, depending on the type of record collected and maintained, records maintained in this system of records may also be covered by Office of Personnel Management/Government-10 Employee Medical File System Records, 75 FR 35,099 (June 21, 2010). However, JUSTICE/JMD–025 covers additional records—specifically records collected in response to COVID–19, a high-consequence public health threat, as well as other declared public health emergencies.

This system of records notice is being modified to conform with the requirements of Executive Order 14,043, Executive Order on Requiring Coronavirus Disease 2019 Vaccination for Federal Employees and Executive Order 14,042, Ensuring Adequate COVID Safety Protocols for Federal Contractors. These orders mandate that categories of Department personnel be vaccinated against COVID–19, subject to such exceptions as required by law. This system of records notice is being modified to incorporate collection of records related to requests for legally required exceptions from public health emergency mandates. Additionally, this system of records modification clarifies the definition of the term ''Department personnel'' to specifically include individuals on assignment to the Department from local, state, tribal or territorial agencies, such as Task Force Officers or other detailees.

In accordance with 5 U.S.C. 552a(r), the Department has provided a report to OMB and Congress on this modified system of records.

Dated: January 3, 2022.

Peter A. Winn,

Acting Chief Privacy and Civil Liberties Officer, United States Department of Justice.

JUSTICE/JMD–025:

SYSTEM NAME AND NUMBER:

DOJ Personnel Public Health Emergency Records System, JUSTICE/JMD–025.

SECURITY CLASSIFICATION:

Controlled Unclassified Information.

SYSTEM LOCATION:

Records may be maintained at all locations at which the Department of Justice (DOJ), or contractors on behalf of the Department, operate or at which DOJ operations are supported, including the Robert F. Kennedy Main Justice Department Building, 950 Pennsylvania Avenue NW, Washington, DC 20530–0001.

Additionally, records may be maintained electronically at one or more of the Department's data centers, including, but not limited to, one or more of the Department's Core Enterprise Facilities (CEF), including, but not limited to, the Department's CEF East, Clarksburg, WV 26306, or CEF West, Pocatello, ID 83201. Records within this system of records may be transferred to a Department-authorized cloud service provider within the Continental United States. Access to these electronic records may occur at any location at which the DOJ operates or where DOJ Office of the Chief Information Officer (OCIO) operations are supported. Some or all of the information in the system may be duplicated at other locations where the Department has granted direct access to support DOJ operations, system backup, emergency preparedness, and/or continuity of operations. To determine the location of a particular record maintained in this system of records, contact the system manager, whose contact information is listed in the

''SYSTEM MANAGER(S)'' paragraph, below.

SYSTEM MANAGER(S):

Arthur E. Gary, Deputy Assistant Attorney General, Policy, Management and Procurement, 950 Pennsylvania Avenue NW, Washington, DC 20530–0001, (202) 514–3101.

* * * * *

AUTHORITY FOR MAINTENANCE OF THE SYSTEM:

[Delete existing paragraph and replace with the following:]

Executive Order 14,043, Requiring Coronavirus Disease 2019 Vaccination for Federal Employees; Executive Order 14,042, Ensuring Adequate COVID Safety Protocols for Federal Contractors; federal workforce safety requirements, including the Occupational Safety and Health Act of 1970, 29 U.S.C. Ch. 15, and federal safety programs covered by 5 U.S.C. 7902, implemented by Executive Order No. 12,196, Occupational safety and health programs for Federal employees; federal laws governing reasonable accommodations, including The Rehabilitation Act of 1973, as amended, 29 U.S.C. 791, and Title VII of the Civil Rights Act of 1964, as amended, 42 U.S.C. 2000e, *et seq.;* and federal laws requiring the Attorney General to create and maintain federal records of agency activities, including 5 U.S.C. 301 and 44 U.S.C. 3101.

PURPOSE(S) OF THE SYSTEM:

[Delete existing paragraph and replace with the following:]

The purpose of this system is to maintain records necessary and relevant to Department activities responding to and mitigating the COVID–19 pandemic, and other public health emergencies. Such records include those records needed to understand the impact of an illness or disease on the Department workforce, and to assist in protecting the Department's workforce from, and responding to, a declared public health emergency or other high-consequence public health threats. Among other things, DOJ may use the information collected to facilitate the provision of vaccines to DOJ personnel, including employees, interns, and contractors; to inform individuals who may have been in proximity of a person possibly infected with the disease or illness at or on buildings, grounds, and properties that are owned, leased, or used by the Department; to confirm which personnel have received vaccinations to prevent such disease or illness to spread throughout the Department's workforce; or to process requests for legally required exceptions from public health emergency mandates, including exceptions to vaccination and testing requirements based on religious or medical considerations.

CATEGORIES OF INDIVIDUALS COVERED BY THE SYSTEM:

[Delete existing paragraph and replace with the following:]

Department personnel, including employees, interns, contractors, and other personnel assigned to Department components such as Task Force Officers and other detailees.

CATEGORIES OF RECORDS IN THE SYSTEM:

[Add the following paragraph:]

G. Records regarding a request for a legally required exception to a public health emergency mandate (*e.g.,* written requests detailing the type of exception requested and the basis for such request; documentation accompanying the request to establish a legal basis for the exception; the Department's response to such request; documents related to the exception review process).

POLICIES AND PRACTICES FOR RETENTION AND DISPOSAL OF RECORDS:

[Delete existing paragraph and replace with the following:]

To the extent applicable, to ensure compliance with Americans with Disabilities Act (ADA), the Rehabilitation Act, and the Genetic Information Nondiscrimination Act of 2008 (GINA), medical information must be ''maintained on separate forms and in separate medical files and be treated as a confidential medical record.'' 42 U.S.C. 12112(d)(3)(B); 42 U.S.C. sec 2000ff–5(a); 29 CFR 1630.14(b)(1), (c)(1), (d)(4)(i); and 29 CFR 1635.9(a). This means that medical information and documents must be stored separately from other personnel records. Records compiled under this SORN will be maintained in accordance with applicable NARA General Records Schedules (GRS), including but not limited to: 2.7, Items 010, 070 or 080 (DAA–GRS2017–0010–0001, DAA–GRS2017–0010–0012, and DAA–GRS2017–0010–0013).

* * * * *

HISTORY:

DOJ Personnel Public Health Emergency Records System, JUSTICE/JMD–025, 86 FR 20740 (April 21, 2021).

[FR Doc. 2022–00240 Filed 1–10–22; 8:45 am]

BILLING CODE 4410–NW–P

DEPARTMENT OF LABOR

Employment and Training Administration

Virtual Public Meeting of the Advisory Committee on Apprenticeship (ACA)

AGENCY: Employment and Training Administration (ETA), Labor.

ACTION: Notice of a virtual public meeting.

SUMMARY: Pursuant to the Federal Advisory Committee Act (FACA), notice is hereby given to announce a public meeting of the ACA to be held virtually on Wednesday, January 26, 2022. All meetings of the ACA are open to the public.

DATES: The meeting will begin at 3:30 p.m. Eastern Standard Time on Wednesday, January 26, 2022, at the following link: *https://usdolevents.webex.com/usdolevents/onstage/g.php?MTID=eccf3473ce8c1bfc8dbec27fbd01c7bf5,* and adjourn at 5:00 p.m. Any updates to the agenda and meeting logistics will be posted on the Office of Apprenticeship's website at: *https://www.apprenticeship.gov/advisory-committee-apprenticeship/meetings.*

FOR FURTHER INFORMATION CONTACT: The Designated Federal Officer, Mr. John V. Ladd, Administrator, Office of Apprenticeship, Employment and Training Administration, U.S. Department of Labor, 200 Constitution Avenue NW, Room C–5321, Washington, DC 20210; Email: *Advisory CommitteeonApprenticeship@dol.gov;* Telephone: (202) 693–2796 (this is not a toll-free number).

SUPPLEMENTARY INFORMATION: The ACA is a discretionary committee reestablished by the Secretary of Labor on May 4, 2021, in accordance with FACA (5 U.S.C. app. 2 10), as amended in 5 U.S.C. app. 2, and its implementing regulations (41 CFR 101–6 and 102–3). The first meeting of the ACA was held on October 6, 2021 and the second meeting of the ACA will be held on Wednesday, January 26, 2022.

Instructions To Attend the Meeting

All meeting are open to the public and in order to promote openness, and increase public participation, webinar and audio conference technology will be used to convene the meeting. Login instructions will be posted prominently on the Office of Apprenticeship's website at: *https://www.apprenticeship.gov/advisory-committee-apprenticeship/meetings.* If individuals have special needs and/or disabilities that will require special

accommodations, please contact Kenya Huckaby at (202) 693–3795 or via email at *huckaby.kenya@dol.gov* no later than Tuesday, January 19, 2022.

Webinar and Audio Login Information

Please use the following link and password information to access the meeting.

- *Webex Link: https://usdolevents.webex.com/usdolevents/onstage/g.php?MTID=eccf3473ce8c1bfc8dbec27fbd01c7bf5*
- *VoIP or dial:* 877–465–7975
- *Access Code:* 2763 765 1591
- *Meeting Password:* Welcome!24

Any member of the public who wishes to file written data or comments pertaining to the agenda may do so by sending the data or comments to Mr. John V. Ladd via email at *Advisory CommitteeonApprenticeship@dol.gov,* subject line ''January 2022 ACA Meeting.'' Such submissions will be included in the record for the meeting if received by Tuesday, January 19, 2022. See below regarding members of the public wishing to speak at the ACA meeting.

Purpose of the Meeting and Topics To Be Discussed

The purpose of the January 2022, meeting is for the ACA to discuss the progress of each ACA subcommittee for full committee deliberation. The agenda topics for this meeting include the following:

- Departmental Apprenticeship Updates
- Apprentice Perspectives
- Subcommittee Report Outs
- Public Comment
- Adjourn

The agenda and meeting logistics may need to be updated should priority items come before the ACA between the time of this publication and the scheduled date of the ACA meeting. All meeting updates will be posted to the Office of Apprenticeship's website at: *https://www.apprenticeship.gov/advisory-committee-apprenticeship/meetings.* Any member of the public who wishes to speak at the meeting should indicate the nature of the intended presentation and the amount of time needed by furnishing a written statement to the Designated Federal Officer, Mr. John V. Ladd, via email at *AdvisoryCommitteeonApprenticeship@dol.gov,* by Tuesday, January 19, 2022. The Chairperson will announce at the beginning of the meeting the extent to which time will permit the granting of such requests.

Angela Hanks,

Acting Assistant Secretary for Employment and Training, Labor.

[FR Doc. 2022–00273 Filed 1–10–22; 8:45 am]

BILLING CODE 4510–FR–P

DEPARTMENT OF LABOR

Employment and Training Administration

Agency Information Collection Activities; Comment Request; Federal Pell Grants and the Payment of Unemployment Benefits to Individuals in Approved Training

ACTION: Notice.

SUMMARY: The Department of Labor's (DOL) Employment and Training Administration (ETA) is soliciting comments concerning a proposed authority to conduct the new information collection request (ICR) titled, ''Federal Pell Grants and the Payment of Unemployment Benefits to Individuals in Approved Training.'' This comment request is part of continuing Departmental efforts to reduce paperwork and respondent burden in accordance with the Paperwork Reduction Act of 1995 (PRA).

DATES: Consideration will be given to all written comments received by March 14, 2022.

ADDRESSES: A copy of this ICR with applicable supporting documentation, including a description of the likely respondents, proposed frequency of response, and estimated total burden, may be obtained free by contacting LaMia Chapman by telephone at 202–693–3356 (this is not a toll-free number), TTY 1–877–889–5627 (this is not a toll-free number), or by email at *Chapman.LaMia@dol.gov.*

Submit written comments about, or requests for a copy of, this ICR by mail or courier to the U.S. Department of Labor, Employment and Training Administration (ETA), Office of Workforce Investment, 200 Constitution NW, Rm. C–4518, Washington, DC 20210; by email: *Chapman.LaMia@dol.gov;* or by fax (202) 693–3890.

FOR FURTHER INFORMATION CONTACT: LaMia Chapman by telephone at 202–693–3356 (this is not a toll-free number) or by email at *Chapman.LaMia@dol.gov.*

SUPPLEMENTARY INFORMATION: DOL, as part of continuing efforts to reduce paperwork and respondent burden, conducts a pre-clearance consultation program to provide the general public and Federal agencies an opportunity to comment on proposed and/or continuing collections of information before submitting them to the Office of Management and Budget (OMB) for final approval. This program helps to ensure requested data can be provided in the desired format, reporting burden (time and financial resources) is minimized, collection instruments are clearly understood, and the impact of collection requirements can be properly assessed.

The purpose of this ICR is to send notification letters to Unemployment Beneficiaries (UI) informing them of the Pell Grant program. Specifically, the letter will provide them with links to get additional information regarding potential opportunities to increase their skills to obtain industry-recognized credentials, and remind them that UI beneficiaries can, in some circumstances, continue to receive UI benefits while in training with the State's approval. The Federal Unemployment Tax Act (FUTA) Section 3304(a)(8) contained in Public Law 111–5, enacted February 17, 2009, authorizes this information collection.

This information collection is subject to the PRA. A Federal agency generally cannot conduct or sponsor a collection of information, and the public is generally not required to respond to an information collection, unless it is approved by OMB under the PRA and displays a currently valid OMB Control Number. In addition, notwithstanding any other provisions of law, no person shall generally be subject to penalty for failing to comply with a collection of information that does not display a valid Control Number. *See* 5 CFR 1320.5(a) and 1320.6.

Interested parties are encouraged to provide comments to the contact shown in the **ADDRESSES** section. Comments must be written to receive consideration, and they will be summarized and included in the request for OMB approval of the final ICR. In order to help ensure appropriate consideration, comments should mention 1205–0NEW.

Submitted comments will also be a matter of public record for this ICR and posted on the internet, without redaction. DOL encourages commenters not to include personally identifiable information, confidential business data, or other sensitive statements/information in any comments.

DOL is particularly interested in comments that:

- Evaluate whether the proposed collection of information is necessary for the proper performance of the functions of the agency, including

whether the information will have practical utility;

• Evaluate the accuracy of the agency's estimate of the burden of the proposed collection of information, including the validity of the methodology and assumptions used;

• Enhance the quality, utility, and clarity of the information to be collected; and

• Minimize the burden of the collection of information on those who are to respond, including through the use of appropriate automated, electronic, mechanical, or other technological collection techniques or other forms of information technology, (*e.g.,* permitting electronic submission of responses).

Agency: DOL–ETA.

Type of Review: New collection.

Title of Collection: Federal Pell Grants and the Payment of Unemployment Benefits to Individuals in Approved Training.

Form: N/A.

OMB Control Number: 1205–0NEW.

Affected Public: State, Local, and Tribal Governments.

Estimated Number of Respondents: 53.

Frequency: 2,120.

Total Estimated Annual Responses: 112,360.

Estimated Average Time per Response: 5 hours.

Estimated Total Annual Burden Hours: 561,800 hours.

Total Estimated Annual Other Cost Burden: $0.

Authority: 44 U.S.C. 3506(c)(2)(A).

Angela Hanks,

Acting Assistant Secretary for Employment and Training, Labor.

[FR Doc. 2022–00274 Filed 1–10–22; 8:45 am]

BILLING CODE 4510–FW–P

DEPARTMENT OF LABOR

Agency Information Collection Activities; Submission for OMB Review; Comment Request; Statement of Recovery Forms

ACTION: Notice of availability; request for comments.

SUMMARY: The Department of Labor (DOL) is submitting this Office of Workers' Compensation Programs (OWCP) sponsored information collection request (ICR) to the Office of Management and Budget (OMB) for review and approval in accordance with the Paperwork Reduction Act of 1995 (PRA). Public comments on the ICR are invited.

DATES: The OMB will consider all written comments that the agency receives on or before February 10, 2022.

ADDRESSES: Written comments and recommendations for the proposed information collection should be sent within 30 days of publication of this notice to *www.reginfo.gov/public/do/PRAMain.* Find this particular information collection by selecting ''Currently under 30-day Review—Open for Public Comments'' or by using the search function.

Comments are invited on: (1) Whether the collection of information is necessary for the proper performance of the functions of the Department, including whether the information will have practical utility; (2) if the information will be processed and used in a timely manner; (3) the accuracy of the agency's estimates of the burden and cost of the collection of information, including the validity of the methodology and assumptions used; (4) ways to enhance the quality, utility and clarity of the information collection; and (5) ways to minimize the burden of the collection of information on those who are to respond, including the use of automated collection techniques or other forms of information technology.

FOR FURTHER INFORMATION CONTACT: Nora Hernandez by telephone at 202–693–8633, or by email at *DOL_PRA_PUBLIC@dol.gov.*

SUPPLEMENTARY INFORMATION: In accordance with 5 U.S.C. 8131, a Federal employee who sustains a work-related injury is entitled to receive compensation under the Federal Employees' Compensation Act (FECA). If that injury is caused under circumstances that create a legal liability in a third party to pay damages, FECA authorizes the Secretary of Labor to require the employee to assign his or her right of action to the United States or to prosecute the action in his or her own name. For additional substantive information about this ICR, see the related notice published in the **Federal Register** on September 9, 2021 (86 FR 50559).

This information collection is subject to the PRA. A Federal agency generally cannot conduct or sponsor a collection of information, and the public is generally not required to respond to an information collection, unless the OMB approves it and displays a currently valid OMB Control Number. In addition, notwithstanding any other provisions of law, no person shall generally be subject to penalty for failing to comply with a collection of information that does not display a valid OMB Control Number. *See* 5 CFR 1320.5(a) and 1320.6.

DOL seeks PRA authorization for this information collection for three (3) years. OMB authorization for an ICR cannot be for more than three (3) years without renewal. The DOL notes that information collection requirements submitted to the OMB for existing ICRs receive a month-to-month extension while they undergo review.

Agency: DOL–OWCP.

Title of Collection: Statement of Recovery Forms.

OMB Control Number: 1240–0001.

Affected Public: Individuals or Households; Private Sector—Businesses or other for-profits.

Total Estimated Number of Respondents: 1,164.

Total Estimated Number of Responses: 1,164.

Total Estimated Annual Time Burden: 580 hours.

Total Estimated Annual Other Costs Burden: $21.

Authority: 44 U.S.C. 3507(a)(1)(D).

Nora Hernandez,

Departmental Clearance Officer.

[FR Doc. 2022–00275 Filed 1–10–22; 8:45 am]

BILLING CODE 4510–CH–P

NATIONAL AERONAUTICS AND SPACE ADMINISTRATION

[Notice: (22–001)]

Requirement for NASA Recipients of Financial Assistance Awards To Obtain a Quotation From Small and/or Minority Businesses, Women's Business Enterprises and Labor Surplus Area Firms

AGENCY: National Aeronautics and Space Administration.

ACTION: Request for public comment on new term and condition that requires recipients of NASA financial assistance to obtain a quotation from small and/or minority businesses, women's business enterprises or labor surplus area firms.

SUMMARY: The Grants Policy and Compliance Branch (GPC) in the National Aeronautics and Space Administration's (NASA) Office of the Chief Financial Officer is soliciting public comment on the Agency's proposed implementation of a new term and condition that requires recipients of NASA financial assistance to obtain a quotation from small and/or minority businesses, women's business enterprises or labor surplus area firms when the acquisition of goods or services exceeds the simplified acquisition threshold. In response to the Executive Order, *Advancing Racial Equity and Support for Underserved*

Communities Through the Federal Government, NASA has been working to identify and address barriers that underserved communities and individuals may face in taking advantage of procurement, contracting, or grant opportunities. To address these barriers, NASA has taken a few actions including proposing the term and condition described above. NASA is taking this action to ensure that entities funded by NASA are compliant with the procurement standards in the uniform guidance. NASA's expectation is that this action will result in an increase in contracting opportunities for small and/or minority businesses, women's business enterprises and labor surplus area firms that contract with NASA financial assistance recipients.

DATES: Comments must be received by February 10, 2022.

ADDRESSES: Comments should be addressed to National Aeronautics and Space Administration Headquarters, 300 E Street SW, Rm. 6O87, Washington, DC 20546 or sent by email to *HQ-fedregcomments@nasa.gov;* Phone Number: 202–358–2180, FAX Number: 202–358–3336. We encourage respondents to submit comments electronically to ensure timely receipt. We cannot guarantee that comments mailed will be received before the comment closing date. Please include ''Requirement to obtain a quotation from small and/or minority businesses, women's business enterprises or labor surplus area firms'' in the subject line of the email message. Please also include the full body of your comments in the text of the message and as an attachment. Include your name, title, organization, postal address, telephone number, and email address in your message.

FOR FURTHER INFORMATION CONTACT: Christiane S. Diallo, email: *Christiane.diallo@nasa.gov,* telephone (202) 358–5179.

SUPPLEMENTARY INFORMATION: On January 25, 2021, President Biden issued E.O. 13985, *Advancing Racial Equity and Support for Underserved Communities Through the Federal Government,* outlining a comprehensive approach to advancing equity for all, including people of color and others who have been historically underserved, marginalized, and adversely affected by persistent poverty and inequality. Given that advancing equity requires a systematic approach to embedding fairness in the decision-making process, the E.O. instructs agencies to recognize and work to redress inequities in their policies and programs that serve as barriers to equal opportunity.

In response to E.O. 13985, NASA has been working to identify and address barriers that underserved communities and individuals may face in taking advantage of procurement, contracting, or grant opportunities. Through focused engagement with stakeholders and comments received from 86 FR 31735, June 15, 2021, *Request for Information on Advancing Racial Equity and Support for Underserved Communities in NASA Programs, Contracts and Grants Process,* NASA has learned that access to information and a lack of resources and opportunities are just some of the barriers faced by underserved communities. As such, GPC has reviewed NASA's grants management policies and procedures and has identified a few actions that can be taken to reduce these barriers, including a proposed implementation of a new term and condition that requires recipients of NASA financial assistance to obtain a quotation from small and/or minority businesses, women's business enterprises or labor surplus area firms when the acquisition of goods or services exceeds the simplified acquisition threshold.

The full text of the new term and condition is provided below:

Requirement To Obtain a Quotation From Small and/or Minority Businesses, Women's Business Enterprises or Labor Surplus Area Firms

Pursuant to the requirements in 2 CFR 200.321, Contracting with small and minority businesses, women's business enterprises, and labor surplus area firms, grant and cooperative agreement recipients shall, to the extent practicable, obtain at least one quotation in response to a recipient-issued Request for Quotation (RFQ) from a small and/or minority business, women's business enterprise or labor surplus area firms when the acquisition of goods or services exceeds the simplified acquisition threshold (SAT) as defined in the Federal Acquisition Regulation (FAR) part 2.101, Definitions (currently the SAT is $250,000). In the event that recipients are unable to obtain at least one quote from a small and/or minority business women's business enterprise or labor surplus area firm, a written justification indicating why this was not possible must be maintained in the recipient's records.

End of Proposed Term and Condition Implementation

Upon receipt and resolution of all comments, it is NASA's intention to implement the new term through a revision to the NASA Grant and Cooperative Agreement Manual (GCAM). These revised terms and conditions will become effective thirty days from the final notice publication date in the **Federal Register** and will be available in the GCAM.

The new term and condition will be applied to all new NASA awards and funding amendments to existing awards made on or after the effective date.

Cheryl Parker,

Federal Register Liaison Officer.

[FR Doc. 2022–00302 Filed 1–10–22; 8:45 am]

BILLING CODE 7510–13–P

NATIONAL SCIENCE FOUNDATION

Agency Information Collection Activities: Comment Request; Convergence Accelerator Evaluation & Monitoring Plan

AGENCY: National Science Foundation.

ACTION: Notice.

SUMMARY: The National Science Foundation (NSF) is announcing plans for a new data collection. In accordance with the requirements of the Paperwork Reduction Act of 1995, we are providing an opportunity for public comment on this action. After obtaining and considering public comment, NSF will prepare the submission requesting Office of Management and Budget (OMB) clearance of this collection for no longer than three years.

DATES: Written comments on this notice must be received within March 14, 2022 to be assured consideration. Comments received after that date will be considered to the extent practicable. Please send comments to the address below.

FOR FURTHER INFORMATION CONTACT: Suzanne H. Plimpton, Reports Clearance Officer, National Science Foundation, 2415 Eisenhower Avenue, Suite W18200, Alexandria, Virginia 22314; telephone (703) 292–7556; or send email to *splimpto@nsf.gov.* Individuals who use a telecommunications device for the deaf (TDD) may call the Federal Information Relay Service (FIRS) at 1–800–877–8339, which is accessible 24 hours a day, 7 days a week, 365 days a year (including Federal holidays).

SUPPLEMENTARY INFORMATION:

Title of Collection: Generic Clearance for the Convergence Accelerator Evaluation & Monitoring Plan.

OMB Number: 3145–NEW.

Expiration Date of Approval: Not applicable.

Type of Request: New information collection.

Abstract: The information collection will enable the Evaluation and Assessment Capability (EAC) Section within NSF to garner quantitative and qualitative information that will be used to inform programmatic improvements, efficiencies, and enhanced program monitoring for the Convergence Accelerator (CA). This information collection, which entails collecting information from CA applicants and grantees through a series of surveys, interviews, and case studies, is in accordance with the Agency's commitment to improving service delivery as well as the Agency's strategic goal to ''advance the capability of the Nation to meet current and future challenges.''

For this effort, four survey instruments have been developed, each of which will include closed-ended and open-ended questions to generate quantitative and qualitative data. For ease of use for our respondent pool, each of the four survey instruments will be programmed into interactive web surveys and distributed to eligible respondents by email. The surveys, which will serve as a census for all applicable CA applicants and/or grantees, will be used to collect baseline measures at the start of the program and vital information on how grantees progress through the program. Follow-up interviews will be conducted with project team leaders, such as Principal Investigators (PIs) and Principal Directors (PDs), and case studies that will use a project team as the unit of analysis will be used to collect qualitatively rich discursive and observational information that cannot be collected within a web survey. Both follow-up interviews and case studies will be conducted virtually with the possibility of in-person interviews and non-participant observation to be held in the future.

NSF/EAC will only submit a collection for approval under this generic clearance if it meets the following conditions:

○ The collection is voluntary;

○ The collection has a reasonably low burden for respondents (based on considerations of total burden hours, total number of respondents, or burden-hours per respondent) and is low-cost for the Federal government;

○ The collection is non-controversial and does not raise issues of concern for other Federal agencies;

○ The collection is targeted to the solicitation of opinions from respondents who have applied to the CA program (including those that have submitted successful grant applications and subsequently received funding);

○ Personally identifiable information (PII) is collected only to the extent necessary; and

○ Information gathered will be used for the dual and interrelated purposes of disseminating information about the CA program and using this information to make programmatic improvements, efficiencies, and enhanced program monitoring for the CA.

Feedback collected under this generic clearance provides useful information for the continued evolution of the CA program, but it may not yield data that can be generalized to the overall population in all instances. Our qualitative data collection activities—follow-up interviews and case studies—are designed to investigate outlier CA teams or CA teams that demonstrate exceptional performance or successfully overcome significant challenges in their work with the CA. While the web surveys, which will be deployed at different times during the program, will collect data that will help the EAC monitor trends over time and assess overall program performance, the follow-up interviews and case studies will gather supplemental data that is more specific to individual CA teams.

As a general matter, this information collection will not include questions of a sensitive nature, such as sexual behavior and attitudes, religious beliefs, and other matters that are commonly considered private.

Below we provide NSF's projected average estimates for the next three years:

Affected Public: Individuals and households, Businesses and other for-profit organizations, Not-for-profit institutions, Federal government.

Average Expected Annual Number of Activities: 10.

Respondents: 300 per activity.

Annual Responses: 3,000.

Frequency of Response: Once per request.

Average Minutes per Response: 75.

Burden Hours: 1,400.

Comments: Comments are invited on (a) whether the proposed collection of information is necessary for the proper performance of the functions of the Agency, including whether the information shall have practical utility; (b) the accuracy of the Agency's estimate of the burden of the proposed collection of information; (c) ways to enhance the quality, utility, and clarity of the information on respondents, including through the use of automated collection techniques or other forms of information technology; and (d) ways to minimize the burden of the collection of information on those who are to respond, including through the use of appropriate automated, electronic, mechanical, or other technological collection techniques or other forms of information technology.

Dated: January 6, 2022.

Suzanne H. Plimpton,

Reports Clearance Officer, National Science Foundation.

[FR Doc. 2022–00336 Filed 1–10–22; 8:45 am]

BILLING CODE 7555–01–P

NUCLEAR REGULATORY COMMISSION

[Docket No. 52–049; NRC–2020–0088]

Oklo Power LLC, a subsidiary of Oklo Inc.; Oklo Aurora Combined License Application Idaho National Laboratory

AGENCY: Nuclear Regulatory Commission.

ACTION: Combined license application; denial, opportunity to demand a hearing and to petition for leave to intervene.

SUMMARY: Oklo Power LLC, a wholly owned subsidiary of Oklo Inc., submitted a custom combined license application for one Aurora reactor to be located at the Idaho National Laboratory in Idaho on March 11, 2020. The U.S. Nuclear Regulatory Commission (NRC) has denied the Oklo Aurora custom combined license application for failure to provide information in response to NRC staff requests for additional information (RAIs). The agency is denying the application without prejudice, and Oklo is free to resubmit its application supplemented by additional information that was previously requested.

DATES: A demand for a hearing or petition for leave to intervene must be filed by February 10, 2022.

ADDRESSES: Please refer to Docket ID NRC–2020–0088 when contacting the NRC about the availability of information regarding this document. You may obtain publicly available information related to this document using any of the following methods:

• *Federal Rulemaking website:* Go to *https://www.regulations.gov* and search for Docket ID NRC–2020–0088. Address questions about Docket IDs in *Regulations.gov* to Stacy Schumann; telephone: 301–415–0624; email: *Stacy.Schumann@nrc.gov.* For technical questions, contact the individual listed in the **FOR FURTHER INFORMATION CONTACT** section of this document.

• *NRC's Agencywide Documents Access and Management System (ADAMS):* You may obtain publicly available documents online in the ADAMS Public Documents collection at

https://www.nrc.gov/reading-rm/adams.html. To begin the search, select ''Begin Web-based ADAMS Search.'' For problems with ADAMS, please contact the NRC's Public Document Room (PDR) reference staff at 1–800–397–4209, 301–415–4737, or by email to *PDR.Resource@nrc.gov.* The ADAMS accession number for each document referenced is provided the first time that it is mentioned in this document. Oklo Power LLC, a wholly owned subsidiary of Oklo Inc., submitted the custom combined license application by letter dated March 11, 2020 (ADAMS Accession No. ML20075A001). The custom combined license application is available in ADAMS under Package Accession No. ML20075A000.

- *NRC's PDR:* You may examine and purchase copies of public documents, by appointment, at the NRC's PDR, Room P1 B35, One White Flint North, 11555 Rockville Pike, Rockville, Maryland 20852. To make an appointment to visit the PDR, please send an email to *PDR.Resource@nrc.gov* or call 1–800–397–4209 or 301–415–4737, between 8:00 a.m. and 4:00 p.m. (ET), Monday through Friday, except Federal holidays.

FOR FURTHER INFORMATION CONTACT: William Kennedy, Office of Nuclear Reactor Regulation, U.S. Nuclear Regulatory Commission, Washington, DC 20555–0001; telephone: 301–415–2313; email: *William.Kennedy@nrc.gov.*

SUPPLEMENTARY INFORMATION:

I. Discussion

The NRC staff has denied the custom combined license application for the Aurora reactor pursuant to the requirements of Part 2 of title 10 of the *Code of Federal Regulations* (10 CFR), ''Agency Rules of Practice and Procedure,'' Section 2.108, ''Denial of application for failure to supply information.'' The staff denied the application because, as described below, Oklo Power LLC (Oklo), a wholly owned subsidiary of Oklo Inc., did not provide sufficient information within the time specified in NRC staff RAIs and has not otherwise provided sufficient information to address the specific questions identified in the RAIs. The NRC staff requested additional information to resolve key safety and design aspects of the licensing basis and establish a schedule for the full review of the proposed Aurora facility. Because Oklo has failed to provide substantive technical information necessary to respond to the NRC staff's RAIs, the staff can neither establish a schedule for conducting a detailed technical review of the application nor reach safety findings required to license the facility. Accordingly, the agency is ending its review of the Aurora custom combined license application and denying the application without prejudice. Oklo is free to resubmit its application supplemented by additional information in the areas described in this section.

On March 11, 2020 (85 FR 19032), Oklo submitted a custom combined license application for one microreactor, designated the Aurora, to be located at the Idaho National Laboratory in Idaho. A custom combined license application submitted under 10 CFR part 52, subpart C, ''Combined Licenses,'' must contain site-specific information needed for licensing as well as the same level of design detail that would be required for a design certification application so that the NRC can make final safety findings on the design. Since March 2020, when Oklo submitted its custom combined license application, Oklo has repeatedly failed to provide substantive information in response to NRC staff RAIs on the maximum credible accident (MCA) analysis for the Aurora; the safety classification of structures, systems, and components (SSCs); and other issues needed for the NRC staff to establish a schedule for its technical review and to complete that review. These information needs were identified and communicated to Oklo in letters dated June 5, 2020 and November 17, 2020, in RAIs issued in September 2020, and at many additional times after the custom combined license application was submitted.

In a letter dated June 5, 2020 (ADAMS Accession No. ML20149K616), docketing the custom combined license application, the NRC staff communicated its plans to complete the review of the Aurora design in a two-step process. In Step 1, which the staff estimated would last five months, the NRC staff planned to engage Oklo on four key safety and design aspects of the licensing basis: (1) The MCA analysis, which affects several aspects of the licensing basis for the Aurora; (2) the classification of SSCs, including performance requirements; (3) the implementation of Oklo's quality assurance (QA) program to the design; and (4) certain topics related to the applicability of regulations. At the conclusion of Step 1, NRC staff expected to have defined the scope of the full, detailed technical review and thus be able to develop a schedule to efficiently perform the review in Step 2.

As part of the Step 1 custom combined license application review, in September 2020 the staff asked RAIs on the subjects of the MCA analysis, safety classification of SSCs, and QA program implementation (ADAMS Accession Nos. ML20265A121, ML20265A123, ML20265A346, and ML20267A529). Oklo submitted a reply on October 30, 2020, but its reply did not provide the detailed technical information needed to respond to the staff's questions (ADAMS Package Accession No. ML20305A582). On November 17, 2020, the staff issued two letters to Oklo; one letter (ADAMS Accession No. ML20300A593) closed out the portion of the Step 1 review related to the applicability of regulations, which did not depend on the RAI reply, and the second letter (ADAMS Accession No. ML20308A677) identified areas where the RAI reply did not provide sufficient information on safety aspects of the Aurora design to enable the NRC to complete the Step 1 review and establish a schedule for a detailed technical review of the application. The second letter also stated that the NRC staff would treat the topic of QA program implementation together with safety classification of SSCs, given the relationship between the two topics, and summarized the technical information that Oklo would need to submit to support closure of the Step 1 review with respect to the MCA analysis and the safety classification of SSCs.

Oklo subsequently informed NRC staff that it would submit two generic topical reports to address these topics, including the specific questions in the RAIs. By letter dated July 2, 2021 (ADAMS Accession No. ML21184A001), Oklo submitted topical reports, ''Maximum Credible Accident Methodology,'' Revision 2 (ADAMS Accession No. ML21184A002), and ''Performance Based Licensing Methodology,'' Revision 0 (ADAMS Accession No. ML21187A001), which Oklo provided to explain its novel approach to MCA analysis and SSC classification respectively. The NRC staff performed completeness reviews of the topical reports and determined that the topical reports were not sufficiently complete for the NRC staff to initiate detailed technical reviews. The NRC staff informed Oklo of the decision by two emails dated August 5, 2021 (ADAMS Accession Nos. ML21201A079 and ML21201A111), that included attachments describing the supplemental information needed for the NRC staff to begin the detailed review of each topical report (ADAMS Accession Nos. ML21201A094 and ML21201A113). At Oklo's request, the NRC staff also held public meetings with Oklo on September 1, 16, and 28, 2021 (ADAMS Accession Nos. ML21259A260, ML21266A428, and

ML21293A329, respectively) to clarify the supplemental information needs. In response, Oklo submitted ''Maximum Credible Accident Methodology,'' Revision 3 on October 5, 2021 (ADAMS Accession Nos. ML21278B097 and ML21278B098), and ''Performance-Based Licensing Methodology,'' Revision 1 on October 19, 2021 (ADAMS Accession Nos. ML21292A326 and ML21292A327). The NRC staff performed completeness reviews of the revised topical reports and informed Oklo by letter dated January 6, 2022 (ADAMS Package Accession No. ML21307A108) the topical reports still did not contain sufficient technical information for the NRC staff to initiate detailed technical reviews.

The NRC staff has denied the Aurora custom combined license application because Oklo has repeatedly failed to submit the information needed to complete the Step 1 review of its MCA analysis and safety classification of SSCs. Oklo's October 30, 2020, RAI responses did not contain sufficient technical information. The topical reports Oklo submitted, in part, to address Step 1 of the review to support a predictable review schedule, contained information that is conceptual in nature and does not adequately describe Oklo's methodologies for the Aurora's MCA analysis or for safety classification of SSCs. Because of Oklo's repeated failures to provide sufficient information on safety aspects of the Aurora design in response to the NRC staff's RAIs, including information related to its MCA methodology, safety classification of SSCs (including Oklo's implementation of its QA program), and the specific matters identified in the September 2020 RAIs, the NRC staff cannot establish a schedule for conducting a detailed technical review and the NRC's review of the Aurora custom combined license application cannot move forward. Oklo was notified of the NRC's denial of the custom combined license application by letter dated January 6, 2022 (ADAMS Accession No. ML21357A034).

II. Opportunity To Request a Hearing and Petition for Leave To Intervene

Within 30 days after the date of publication of this notice, the applicant may demand a hearing with respect to the denial described above. A demand for hearing must be filed in accordance with the NRC's requirements specified in 10 CFR part 2, subpart C, except for 10 CFR 2.309(f). If the applicant demands a hearing, the demand must identify each error of fact or law that the applicant asserts is material to the denial or identify any other reason why the denial should not have been issued. The applicant must further state in the demand the specific bases, whether factual or legal, for each asserted error or other reason why the denial should not have been issued. The demand must refer to the specific statements in documents on the docket that the applicant asserts respond to the RAIs.

In addition, any person (petitioner) whose interest may be affected by this denial may, within 30 days after the date of publication of this notice, file a request for a hearing and petition for leave to intervene (petition) with respect to the denial. Petitions must be filed in accordance with the Commission's ''Agency Rules of Practice and Procedure'' in 10 CFR part 2. The NRC's regulations are accessible electronically from the NRC Library on the NRC's website at *http://www.nrc.gov/reading-rm/doc-collections/cfr/*. Alternatively, a copy of the regulations is available at the NRC's PDR by appointment, located at One White Flint North, Room P1 B35, 11555 Rockville Pike (first floor), Rockville, Maryland 20852. To schedule an appointment to visit the PDR, please email *PDR.Resource@nrc.gov* or call 1–800–397–4209. If a petition is filed, the Commission or a presiding officer will rule on the petition and, if appropriate, a notice of a hearing will be issued.

As required by 10 CFR 2.309(d) the petition should specifically explain the reasons why intervention to contest the denial should be permitted with particular reference to the following general requirements for standing: (1) The name, address, and telephone number of the petitioner; (2) the nature of the petitioner's right under the Act to be made a party to the proceeding; (3) the nature and extent of the petitioner's property, financial, or other interest in the proceeding; and (4) the possible effect of any decision or order which may be entered in the proceeding on the petitioner's interest.

The petition must also set forth the specific contentions which the petitioner seeks to have litigated in the proceeding. Contentions must be limited to matters within the scope of the proceeding, *i.e.,* why the application should not have been denied under 10 CFR 2.108. Each contention must consist of a specific statement of the issue of law or fact to be raised or controverted. In addition, the petitioner must provide a brief explanation of the bases for the contention and a concise statement of the alleged facts or expert opinion which support the contention and on which the petitioner intends to rely in proving the contention at the hearing. The petitioner must also provide references to the specific sources and documents submitted on the docket on which the petitioner intends to rely to support its position that the application should not have been denied. The contention must be one which, if proven, would entitle the petitioner to relief. A petitioner who fails to satisfy the above requirements with respect to at least one contention will not be permitted to participate as a party.

Those permitted to intervene become parties to the proceeding, subject to any limitations in the order granting leave to intervene. Parties have the opportunity to participate fully in the conduct of the hearing with respect to resolution of that party's admitted contentions, including the opportunity to present evidence, consistent with the NRC's regulations, policies, and procedures.

Petitions must be filed no later than 30 days from the date of publication of this notice. Petitions and motions for leave to file new or amended contentions that are filed after the deadline will not be entertained absent a determination by the presiding officer that the filing demonstrates good cause by satisfying the three factors in 10 CFR 2.309(c)(1)(i) through (iii). The petition must be filed in accordance with the filing instructions in the ''Electronic Submissions (E-Filing)'' section of this document.

A State, local governmental body, Federally recognized Indian Tribe, or agency thereof, may submit a petition to the Commission to participate as a party under 10 CFR 2.309(h)(1). The petition should state the nature and extent of the petitioner's interest in the proceeding. The petition should be submitted to the Commission no later than 30 days from the date of publication of this notice. The petition must be filed in accordance with the filing instructions in the ''Electronic Submissions (E-Filing)'' section of this document, and should meet the requirements for petitions set forth in this section, except that under 10 CFR 2.309(h)(2) a State, local governmental body, or Federally recognized Indian Tribe, or agency thereof does not need to address the standing requirements in 10 CFR 2.309(d) if the facility is located within its boundaries. Alternatively, a State, local governmental body, Federally recognized Indian Tribe, or agency thereof may participate as a non-party under 10 CFR 2.315(c).

If the applicant demands a hearing, the presiding officer grants a petition to intervene, or both, the proceeding will be conducted under 10 CFR part 2, subpart L, unless (1) the presiding officer elects other procedures; (2) the

presiding officer finds, upon motion of a party accompanying its demand or petition, that the circumstances satisfy the standards in 10 CFR 2.310(d) for conducting the proceeding under 10 CFR part 2, subpart G; or (3) all parties jointly agree and request that the proceeding be conducted under the procedures of another subpart of 10 CFR part 2.

III. Electronic Submissions (E-Filling)

All documents filed in NRC adjudicatory proceedings, including a demand for hearing, a petition for leave to intervene, any motion or other document filed in the proceeding prior to the submission of a demand for hearing or petition to intervene (hereinafter ''petition''), and documents filed by interested governmental entities participating under 10 CFR 2.315(c), must be filed in accordance with 10 CFR 2.302. The E-Filing process requires participants to submit and serve all adjudicatory documents over the internet, or in some cases to mail copies on electronic storage media, unless an exemption permitting an alternative filing method, as discussed below, is granted. Participants may not submit paper copies of their filings unless they seek an exemption in accordance with the procedures described below. Detailed guidance on electronic submissions is located in the Guidance for Electronic Submissions to the NRC (ADAMS Accession No. ML13031A056) and on the NRC website at *https://www.nrc.gov/site-help/e-submittals.html.*

To comply with the procedural requirements of E-Filing, at least 10 days prior to the filing deadline, the participant should contact the Office of the Secretary by email at *Hearing.Docket@nrc.gov,* or by telephone at 301–415–1677, to request (1) a digital identification (ID) certificate, which allows the participant (or its counsel or representative) to digitally sign documents and access the E-Submittal server for any proceeding in which it is participating; and (2) advise the Secretary that the participant will be submitting a petition or other adjudicatory document (even in instances in which the participant, or its counsel or representative, already holds an NRC-issued digital ID certificate). Based upon this information, the Secretary will establish an electronic docket for the proceeding if the Secretary has not already established an electronic docket.

Information about applying for a digital ID certificate is available on the NRC's public website at *https://www.nrc.gov/site-help/e-submittals/getting-started.html.* After a digital ID certificate is obtained and a docket created, the participant must submit adjudicatory documents in Portable Document Format. Guidance on submissions is available on the NRC's public website at *https://www.nrc.gov/site-help/electronic-sub-ref-mat.html.* A filing is considered complete at the time the document is submitted through the NRC's E-Filing system. To be timely, an electronic filing must be submitted to the E-Filing system no later than 11:59 p.m. Eastern Time on the due date. Upon receipt of a transmission, the E-Filing system timestamps the document and sends the submitter an email confirming receipt of the document. The E-Filing system also distributes an email that provides access to the document to the NRC's Office of the General Counsel and any others who have advised the Office of the Secretary that they wish to participate in the proceeding, so that the filer need not serve the document on those participants separately. Therefore, applicants and other participants (or their counsel or representative) must apply for and receive a digital ID certificate before adjudicatory documents are filed to obtain access to the documents via the E-Filing system.

A person filing electronically using the NRC's adjudicatory E-Filing system may seek assistance by contacting the NRC's Electronic Filing Help Desk through the ''Contact Us'' link located on the NRC's public website at *http://www.nrc.gov/site-help/e-submittals.html,* by email to *MSHD.Resource@nrc.gov,* or by a toll-free call at 1–866–672–7640. The NRC Electronic Filing Help Desk is available between 9 a.m. and 6 p.m., Eastern Time, Monday through Friday, excluding government holidays.

Participants who believe that they have good cause for not submitting documents electronically must file an exemption request, in accordance with 10 CFR 2.302(g), with their initial paper filing stating why there is good cause for not filing electronically and requesting authorization to continue to submit documents in paper format. Such filings must be submitted in accordance with 10 CFR 2.302(b)-(d). Participants filing adjudicatory documents in this manner are responsible for serving their documents on all other participants. Participants granted an exemption under 10 CFR 2.302(g)(2) must still meet the electronic formatting requirement in 10 CFR 2.302(g)(1), unless the participant also seeks and is granted an exemption from 10 CFR 2.302(g)(1).

Documents submitted in adjudicatory proceedings will appear in the NRC's electronic hearing docket, which is publicly available at *https://adams.nrc.gov/ehd,* unless excluded pursuant to an order of the presiding officer. If you do not have an NRC-issued digital ID certificate as described above, click ''cancel'' when the link requests certificates and you will be automatically directed to the NRC's electronic hearing dockets where you will be able to access any publicly available documents in a particular hearing docket. Participants are requested not to include personal privacy information such as social security numbers, home addresses, or personal phone numbers in their filings unless an NRC regulation or other law requires submission of such information. With respect to copyrighted works, except for limited excerpts that serve the purpose of the adjudicatory filings and would constitute a Fair Use application, participants should not include copyrighted materials in their submission.

For further details with respect to this action, see the letter from the NRC to Oklo denying the custom combined license application, dated January 6, 2022 (ADAMS Accession No. ML21357A034).

Dated: January 6, 2022.

For the Nuclear Regulatory Commission.

Andrea D. Veil,

Director, Office of Nuclear Reactor Regulation.

[FR Doc. 2022–00339 Filed 1–10–22; 8:45 am]

BILLING CODE 7590–01–P

POSTAL REGULATORY COMMISSION

[Docket No. ACR2021; Order No. 6082]

Postal Service Performance Report and Performance Plan

AGENCY: Postal Regulatory Commission.

ACTION: Notice.

SUMMARY: On December 29, 2021, the Postal Service filed the FY 2021 Performance Report and FY 2022 Performance Plan with its FY 2021 Annual Compliance Report. This notice informs the public of the filing, invites public comment, and takes other administrative steps.

DATES: *Comments are due:* March 1, 2022. *Reply Comments are due:* March 15, 2022.

ADDRESSES: Submit comments electronically via the Commission's Filing Online system at *http://www.prc.gov.* Those who cannot submit comments electronically should contact the person identified in the **FOR FURTHER INFORMATION CONTACT** section by

telephone for advice on filing alternatives.

FOR FURTHER INFORMATION CONTACT: David A. Trissell, General Counsel, at 202–789–6820.

SUPPLEMENTARY INFORMATION:

Table of Contents

I. Introduction
II. Request for Comments
III. Ordering Paragraphs

I. Introduction

Each year the Postal Service must submit to the Commission its most recent annual performance plan and annual performance report. 39 U.S.C. 3652(g). On December 29, 2021, the Postal Service filed its FY 2021 Annual Report to Congress in Docket No. ACR2021.[1] The FY 2021 Annual Report includes the Postal Service's FY 2021 annual performance report (FY 2021 Report) and FY 2022 annual performance plan (FY 2022 Plan). FY 2021 Annual Report at 32–53.

The FY 2022 Plan reviews the Postal Service's plans for FY 2022. The FY 2021 Report discusses the Postal Service's progress during FY 2021 toward its four performance goals:

- High-Quality Service
- Excellent Customer Experiences
- Safe Workplace and Engaged Workforce
- Financial Health

Each year, the Commission must evaluate whether the Postal Service met the performance goals established in the annual performance plan and annual performance report. 39 U.S.C. 3653(d). The Commission may also ''provide recommendations to the Postal Service related to the protection or promotion of public policy objectives set out in'' title 39. *Id.*

Since Docket No. ACR2013, the Commission has evaluated whether the Postal Service met its performance goals in reports separate from the Annual Compliance Determination.[2] The Commission continues this current practice to provide a more in-depth analysis of the Postal Service's progress toward meeting its performance goals and plans to improve performance in future years. To facilitate this review, the Commission invites public comment on the following issues:

- Did the Postal Service meet its performance goals in FY 2021?
- Do the FY 2021 Report and the FY 2022 Plan meet applicable statutory requirements, including 39 U.S.C. 2803 and 2804?
- What recommendations should the Commission provide to the Postal Service that relate to protecting or promoting public policy objectives in title 39?
- For the Excellent Customer Experience performance goal, are there any customer experience (CX) metrics the Postal Service should add to measure CX?[3]
- What recommendations or observations should the Commission make concerning the Postal Service's strategic initiatives?[4]
- What other matters are relevant to the Commission's analysis of the FY 2021 Report and the FY 2022 Plan under 39 U.S.C. 3653(d)?

II. Request for Comments

Comments by interested persons are due no later than March 1, 2022. Reply comments are due no later than March 15, 2022. Pursuant to 39 U.S.C. 505, Katalin K. Clendenin is appointed to serve as Public Representative to represent the interests of the general public in this proceeding with respect to issues related to the Commission's analysis of the FY 2021 Report and the FY 2022 Plan.

III. Ordering Paragraphs

It is ordered:

1. The Commission invites public comment on the Postal Service's FY 2021 Report and FY 2022 Plan.

2. Pursuant to 39 U.S.C. 505, the Commission appoints Katalin K. Clendenin to serve as Public Representative to represent the interests of the general public in this proceeding with respect to issues related to the Commission's analysis of the FY 2021 Report and the FY 2022 Plan.

3. Comments are due no later than March 1, 2022.

4. Reply comments are due no later than March 15, 2022.

5. The Secretary shall arrange for publication of this Order in the **Federal Register**.

By the Commission.

Erica A. Barker,

Secretary.

[FR Doc. 2022–00340 Filed 1–10–22; 8:45 am]

BILLING CODE 7710–FW–P

[1] United States Postal Service Fiscal Year 2021 Annual Report to Congress, Library Reference USPS–FY21–17, December 29, 2021, folder ''USPS–FY21–17'' folder ''FY21.17.Annual.Report'' file ''FY 2021 Annual Report to Congress.pdf'' (FY 2021 Annual Report).

[2] *See* Docket No. ACR2013, Postal Regulatory Commission, Review of Postal Service FY 2013 Performance Report and FY 2014 Performance Plan, July 7, 2014; Docket No. ACR2014, Postal Regulatory Commission, Analysis of the Postal Service's FY 2014 Program Performance Report and FY 2015 Performance Plan, July 7, 2015; Docket No. ACR2015, Postal Regulatory Commission, Analysis of the Postal Service's FY 2015 Annual Performance Report and FY 2016 Performance Plan, May 4, 2016; Docket No. ACR2016, Postal Regulatory Commission, Analysis of the Postal Service's FY 2016 Annual Performance Report and FY 2017 Performance Plan, April 27, 2017; Docket No. ACR2017, Postal Regulatory Commission, Analysis of the Postal Service's FY 2017 Annual Performance Report and FY 2018 Performance Plan, April 26, 2018; Docket No. ACR2018, Postal Regulatory Commission, Analysis of the Postal Service's FY 2018 Annual Performance Report and FY 2019 Performance Plan, May 13, 2019; Docket No. ACR2019, Postal Regulatory Commission, Analysis of the Postal Service's FY 2019 Annual Performance Report and FY 2021 Performance Plan, June 1, 2021; Docket No. ACR2020, Postal Regulatory Commission, Analysis of the Postal Service's FY 2020 Annual Performance Report and FY 2021 Performance Plan, June 2, 2021.

[3] In FY 2021, the Postal Service measured CX based on surveys of residential, small/medium business, and large business customers. *See* Docket No. ACR2021, Library Reference USPS–FY21–38, December 29, 2021.

[4] *See* FY 2021 Annual Report at 52–53.

RAILROAD RETIREMENT BOARD

Sunshine Act Meetings

TIME AND DATE: 10:00 a.m., January 19, 2022.

PLACE: Members of the public wishing to attend the meeting must submit a written request at least 24 hours prior to the meeting to receive dial-in information. All requests must be sent to *SecretarytotheBoard@rrb.gov.*

STATUS: This meeting will be open to the public.

MATTERS TO BE CONSIDERED:

(1) SCOTUS Update
(2) Office of Legislative Affairs Update
(3) Re-Entry Update
(4) Programs Update

CONTACT PERSON FOR MORE INFORMATION: Stephanie Hillyard, Secretary to the Board, (312) 751–4920.

Authority: 5 U.S.C. 552b.

Dated: January 7, 2022.

Stephanie Hillyard,

Secretary to the Board.

[FR Doc. 2022–00412 Filed 1–7–22; 4:15 pm]

BILLING CODE 7905–01–P

SECURITIES AND EXCHANGE COMMISSION

[SEC File No. 270–029, OMB Control No. 3235–0037]

Submission for OMB Review; Comment Request; Extension: Rule 17f–1(c) and Form X–17F–1A

Upon Written Request, Copies Available From: Securities and Exchange Commission, Office of FOIA Services, 100 F Street NE, Washington, DC 20549–2736

Notice is hereby given that pursuant to the Paperwork Reduction Act of 1995 (''PRA'') (44 U.S.C. 3501 *et seq.*), the Securities and Exchange Commission (''Commission'') has submitted to the Office of Management and Budget (''OMB'') a request for approval of extension of the previously approved collection of information provided for in Rule 17f–1(c) (17 CFR 240.17f–1(c) and Form X–17F–1A (17 CFR 249.100) under the Securities Exchange Act of 1934 (15 U.S.C. 78a *et seq.*).

Rule 17f–1(c) requires approximately 10,100 entities in the securities industry to report lost, stolen, missing, or counterfeit securities certificates to the Commission or its designee, to a registered transfer agent for the issue, and, when criminal activity is suspected, to the Federal Bureau of Investigation. Such entities are required to use Form X–17F–1A to make such reports. Filing these reports fulfills a statutory requirement that reporting institutions report and inquire about missing, lost, counterfeit, or stolen securities. Since these reports are compiled in a central database, the rule facilitates reporting institutions to access the database that stores information for the Lost and Stolen Securities Program.

We estimate that 10,100 reporting institutions will report that securities certificates are either missing, lost, counterfeit, or stolen annually and that each reporting institution will submit this report 30 times each year. The staff estimates that the average amount of time necessary to comply with Rule 17f–1(c) and Form X17F–1A is five minutes per submission. The total burden is approximately 25,250 hours annually for the entire industry (10,100 times 30 times 5 divided by 60).

Rule 17f–1(c) is a reporting rule and does not specify a retention period. The rule requires an incident-based reporting requirement by the reporting institutions when securities certificates are discovered to be missing, lost, counterfeit, or stolen. Registering under Rule 17f–1(c) is mandatory to obtain the benefit of a central database that stores information about missing, lost, counterfeit, or stolen securities for the Lost and Stolen Securities Program. Reporting institutions required to register under Rule 17f–1(c) will not be kept confidential; however, the Lost and Stolen Securities Program database will be kept confidential.

An agency may not conduct or sponsor, and a person is not required to respond to, a collection of information under the PRA unless it displays a currently valid OMB control number.

The public may view background documentation for this information collection at the following website: *www.reginfo.gov.* Find this particular information collection by selecting ''Currently under 30-day Review—Open for Public Comments'' or by using the search function. Written comments and recommendations for the proposed information collection should be sent within 30 days of publication of this notice to (i) *www.reginfo.gov/public/do/PRAMain* and (ii) David Bottom, Director/Chief Information Officer, Securities and Exchange Commission, c/o John R. Pezzullo, 100 F Street NE, Washington, DC 20549, or by sending an email to: *PRA_Mailbox@sec.gov.*

Dated: January 5, 2022.

J. Matthew DeLesDernier,

Assistant Secretary.

[FR Doc. 2022–00254 Filed 1–10–22; 8:45 am]

BILLING CODE 8011–01–P

SECURITIES AND EXCHANGE COMMISSION

[Investment Company Act Release No. 34465; File No. 812–15190]

HPS Corporate Lending Fund, et al.

January 5, 2022.

AGENCY: Securities and Exchange Commission (''Commission'').

ACTION: Notice.

Notice of application for an order under sections 17(d) and 57(i) of the Investment Company Act of 1940 (the ''Act'') and rule 17d–1 under the Act to permit certain joint transactions otherwise prohibited by sections 17(d) and 57(a)(4) of the Act and rule 17d–1 under the Act.

SUMMARY OF APPLICATION: Applicants request an order to permit certain business development companies and closed-end management investment companies to co-invest in portfolio companies with each other and with affiliated investment funds.

APPLICANTS: HPS Corporate Lending Fund (''HPS Fund''); HPS Investment Partners, LLC (''HPS''); Brickyard Direct Lending Fund, L.P.; Core Senior Lending Fund (A–A), L.P.; Core Senior Lending Fund, L.P.; HPS DPT Direct Lending Fund, L.P.; Hinode Direct Lending 2017 Fund, L.P.; Kitty Hawk Credit Fund, L.P.; HPS Investment Partners (UK) LLP; HPS Investment Partners (HK), Limited; HPS Investments Partners (AUS) Pty Ltd.; HPS ALSC Management, LLC; HPS Mezzanine Partners, LLC; HPS Mezzanine Partners II, LLC; HPS Mezzanine Management III, LLC; HPS Mezzanine Management 2019, LLC; HPS Opportunities SL Management, LLC; HPS RE Management, LLC; HPS Investment Partners CLO (US), LLC; HPS Investment Partners CLO (UK) LLP; HPS EF GP, LLC; HPS EL SLF 2016 GP, LLC; CGC, LLC; CGC III Partners LLC; Core Senior Lending Master Fund (PB), L.P.; HPS Core Senior Lending Portfolio (PB) II, L.P.; Credit Value Master Fund 2016, L.P.; Credit Value Master Fund V, L.P.; Credit Value Ontario Fund V, L.P.; Credit Value Master Fund VI, L.P.; European Asset Value Fund (USD) II, L.P.; European Asset Value Offshore Fund (USD) II, L.P.; European Asset Value Offshore Fund II, L.P.; HPS European Liquid Loan Opportunities Master Fund, L.P.; HPS Mezzanine Partners 2019, L.P.; HPS Offshore Mezzanine Partners 2019 Co-Invest, L.P.; HPS Offshore Mezzanine Partners 2019 Europe, SCSp; HPS Offshore Mezzanine Partners 2019, L.P.; HPS Special Situations Opportunity Fund, L.P.; HPS Special Situations Opportunity Offshore Fund, L.P.; HPS Specialty Loan Europe Fund V, SCSp; HPS Specialty Loan Fund (JPY) V, L.P.; HPS Specialty Loan Fund V, L.P.; HPS Specialty Loan Fund V–L, L.P.; HPS Specialty Loan International Fund V, SCSp; HPS Specialty Loan International Fund V–L, L.P.; Institutional Credit Master Fund, L.P.; Liquid Loan Opportunities Master Fund, L.P.; Mayfair Alternative Credit Funds ICAV; Mezzanine Partners III, L.P.; Offshore Mezzanine Partners III Co-Invest, L.P.; Offshore Mezzanine Partners III, L.P.; Real Estate Credit Solutions Fund II, L.P.; Real Estate Credit Solutions Offshore Fund II, L.P.; Specialty Loan Fund 2016, L.P.; Specialty Loan Fund 2016–L, L.P.; Specialty Loan Institutional Fund 2016–L, L.P.; Aspen Co-Invest, L.P.; Bronco Co-Invest, L.P; Endurance II Co-Invest, L.P.; Galaxy III Co-Invest, L.P.; Milano Co-Invest, L.P.; Neptune Co-Invest, L.P.; Patriot Co-Invest, L.P.; Aiguilles Rouges Irish Specialty Loan Fund plc; Aiguilles Rouges Specialty Loan Fund, L.P.; Cactus Direct Lending Fund, L.P.; Cardinal Fund, L.P.; CST Specialty Loan Fund, L.P.; Falcon Credit Fund, L.P.; GIM Credit Lux S.A.; GIM Credit Master Lux S.à r.l.; GIM II, L.P.; GIM, L.P.; HC Direct Lending Fund, L.P.; HN Co-Investment Fund, L.P.; HPS Core Senior Lending Co-Invest, L.P.; HPS Halite 2020 Direct Lending Fund Limited; HPS KP Mezz 2019 Co-Invest, L.P.; HPS Magnetite Energy & Power Credit Fund, L.P.; HPS Magnetite Energy & Power Credit Offshore Fund, L.P.; HPS Ocoee Specialty Loan Fund, L.P.; HPS OH Co-Investment Fund, L.P.; HPS PA Co-

Investment Fund, L.P.; HPS RR Specialty Loan Fund, L.P.; HPS VG Co-Investment Fund, L.P.; Jade Real Assets Fund, L.P.; Mauna Kea Fund, L.P.; Moreno Street Direct Lending Fund, L.P.; NDT Senior Loan Fund, L.P.; Presidio Loan Fund, L.P.; Private Loan Opportunities Fund, L.P.; Red Cedar Fund 2016, L.P.; Sandlapper Credit Fund, L.P.; SC Strategic Investment Fund, L.P.; Specialty Loan Fund—CX–2, L.P.; Specialty Loan VG Fund, L.P.; AP Mezzanine Partners III, L.P.; HPS AP Mezzanine Partners 2019, L.P.; HPS Hinode Mezzanine Partners 2020, L.P.; Specialty Loan Ontario Fund 2016, L.P.; EL Specialty Loan Secondary Fund, L.P.; HPS Offshore Strategic Investment Partners V, L.P.; HPS Strategic Investment Partners V, L.P.; HPS AP Strategic Investment Partners V, L.P.; HPS AD Co-Investment Holdings, L.P.; HPS Strategic Investment Management V, LLC; HPS Elbe Unlevered Direct Lending Fund, SCSp; HPS Specialty Loan Ontario Fund V, L.P.; Shelby Co-Invest, L.P.; Core Senior Lending Fund II, SCSp; Core Senior Lending International Fund II, SCSp; HPS Offshore Strategic Investment Partners V Europe, SCSp; Segovia Loan Advisors (UK) LLP; HPS Core Senior Lending International Fund (EUR) II, SCSp; HPS Specialty Loan Fund (EUR) V, L.P.; Proxima Co-Invest, L.P.; Proxima Onshore Co-Invest, L.P.; HPS Specialty Loan Fund TX, L.P.; Salus Co-Invest, L.P.; Credit Value Fund VII, L.P.; Credit Value Offshore Fund VII, LP.; HPS Mint Co-Invest, L.P.; HPS Special Situations Opportunity Fund II, L.P.; HPS Specialty Situations Opportunity Offshore Fund II; SCSp; Credit Value Ontario Fund VII; L.P; HPS Specialty Situation Opportunity Fund II; HN SIP Co-Investment Fund, L.P.; Core Senior Lending Fund II Feeder, L.P; and HPS KP SIP V Co-Investment Fund, L.P.

FILING DATES: The application was filed on December 30, 2020, and amended on April 21, 2021, August 5, 2021, November 5, 2021, and December 23, 2021.

HEARING OR NOTIFICATION OF HEARING: An order granting the requested relief will be issued unless the Commission orders a hearing. Interested persons may request a hearing by emailing the Commission's Secretary at *Secretarys-Office@sec.gov* and serving applicants with a copy of the request by email. Hearing requests should be received by the Commission by 5:30 p.m. on January 31, 2022, and should be accompanied by proof of service on the applicants, in the form of an affidavit, or, for lawyers, a certificate of service. Pursuant to rule 0–5 under the Act, hearing requests should state the nature of the writer's interest, any facts bearing upon the desirability of a hearing on the matter, the reason for the request, and the issues contested. Persons who wish to be notified of a hearing may request notification by emailing the Commission's Secretary at *Secretarys-Office@sec.gov.*

ADDRESSES:

The Commission: Secretarys-Office@sec.gov.

Applicants: Yoohyun K. Choi at *kathy.choi@hpspartners.com* and Richard Horowitz, Esq. at *richard.horowitz@dechert.com.*

FOR FURTHER INFORMATION CONTACT: Laura J. Riegel, Senior Counsel, at (202) 551–3038, or Trace W. Rakestraw, Branch Chief, at (202) 551–6825 (Division of Investment Management, Chief Counsel's Office).

SUPPLEMENTARY INFORMATION: The following is a summary of the application. The complete application may be obtained via the Commission's website by searching for the file number, or for an applicant using the Company name box, at *http://www.sec.gov/search/search.htm* or by calling (202) 551–8090.

Applicants' Representations

1. HPS Fund is a Delaware statutory trust that is a non-diversified closed-end management investment company that has elected to be regulated as a business development company (''BDC'') under section 54(a) of the Act.[1] HPS Fund's Objectives and Strategies[2] are to generate attractive risk adjusted returns, predominately in the form of current income, with select investments exhibiting the ability to capture long-term capital appreciation, by investing primarily in newly originated senior secured debt and other securities of private U.S. companies within the middle market and upper middle market. The board of trustees (the ''Board'')[3] of HPS Fund has five members, three of whom are not ''interested persons'' of HPS Fund within the meaning of section 2(a)(19) of the Act (''Independent Trustees'').[4]

2. HPS, a Delaware limited liability company, is registered with the Commission as an investment adviser under the Investment Advisers Act of 1940 (''Advisers Act''). HPS serves as the investment adviser to HPS Fund.

3. The Existing Affiliated Funds are the investment funds identified on Schedule A to the application. Each Existing Affiliated Fund would be an investment company but for section 3(c)(1) or section 3(c)(7) of the Act.

4. The investment advisory subsidiaries and relying advisers of HPS identified on Schedule A to the application (each such investment adviser and HPS, an ''Existing Adviser'' and collectively, the ''Existing Advisers''), serve as investment advisers to the respective Existing Affiliated Funds. HPS controls the other Existing Advisers.

5. Applicants seek an order (''Order'') to permit a Regulated Entity[5] and one or more other Regulated Entities and one or more Affiliated Funds[6] to (a) participate in the same investment opportunities through a proposed co-investment program where such participation would otherwise be prohibited under section 17(d) or section 57(a)(4) and the rules under the Act; and (b) make additional investments in securities of such issuers (''Follow-On Investments''), including through the exercise of warrants, conversion privileges, and other rights

[1] HPS Fund filed a Form N–54A on January 3, 2022. *See https://www.sec.gov/Archives/edgar/data/1838126/000114036122000146/0001140361-22-000146-index.htm.* Section 2(a)(48) of the Act defines a BDC to be any closed-end investment company that operates for the purpose of making investments in securities described in sections 55(a)(1) through 55(a)(3) of the Act and makes available significant managerial assistance with respect to the issuers of such securities.

[2] ''Objectives and Strategies'' means the investment objectives and strategies of a Regulated Entity (as defined below), as described in the Regulated Entity's registration statement, other filings the Regulated Entity has made with the Commission under the Securities Act of 1933 (the ''Securities Act''), or under the Securities Exchange Act of 1934, and the Regulated Entity's reports to shareholders.

[3] ''Board'' means the board of directors or equivalent of any Regulated Entity.

[4] ''Independent Trustees'' means, with respect to any Board, the directors or trustees who are not ''interested persons'' within the meaning of section 2(a)(19) of the Act.

[5] ''Regulated Entity'' means HPS Fund and any Future Regulated Entity. ''Future Regulated Entity'' means any closed-end management investment company formed in the future that is registered under the 1940 Act or any closed-end management investment company that has elected to be regulated as a BDC, whose investment adviser is an Adviser, and that intends to participate in the co-investment program described in the application. ''Adviser'' means any Existing Adviser and any Future Adviser. ''Future Adviser'' means any future investment adviser that (i) controls, is controlled by or is under common control with HPS, (ii) is registered as an investment adviser under the Advisers Act, and (iii) is not a Regulated Entity or a subsidiary of a Regulated Entity.

[6] ''Affiliated Fund'' means any Existing Affiliated Fund or any Future Affiliated Fund. ''Future Affiliated Fund'' means any investment fund that would be an ''investment company'' but for section 3(c)(1) or 3(c)(7) of the Act, is formed in the future, whose investment adviser is an Adviser, and that intends to participate in the co-investment program described in the application. No Affiliated Fund is or will be a subsidiary of a Regulated Entity.

to purchase securities of the issuers. ''Co-Investment Transaction'' means any transaction in which a Regulated Entity (or its Wholly-Owned Investment Sub, as defined below) participate together with one or more other Regulated Entities and/or Affiliated Funds in reliance on the requested Order. ''Potential Co-Investment Transaction'' means any investment opportunity in which a Regulated Entity (or its Wholly-Owned Investment Subs) could not participate together with one or more other Regulated Entities and/or one or more Affiliated Funds without obtaining and relying on the Order.[7]

6. Applicants state that any of the Regulated Entities, from time to time, form one or more Wholly-Owned Investment Subs.[8] Such a subsidiary would be prohibited from investing in a Co-Investment Transaction with any other Regulated Entity or Affiliated Fund because it would be a company controlled by its parent Regulated Entity for purposes of section 57(a)(4) and rule 17d–1. Applicants request that each Wholly-Owned Investment Sub be permitted to participate in Co-Investment Transactions in lieu of its parent Regulated Entity and that the Wholly-Owned Investment Sub's participation in any such transaction be treated, for purposes of the Order, as though the parent Regulated Entity were participating directly. Applicants represent that this treatment is justified because a Wholly-Owned Investment Sub would have no purpose other than serving as a holding vehicle for the Regulated Entity's investments and, therefore, no conflicts of interest could arise between the Regulated Entity and the Wholly-Owned Investment Sub. The Regulated Entity's Board would make all relevant determinations under the conditions with regard to a Wholly-Owned Investment Sub's participation in a Co-Investment Transaction, and the Regulated Entity's Board would be informed of, and take into consideration, any proposed use of a Wholly-Owned Investment Sub in the Regulated Entity's place. If the Regulated Entity proposes to participate in the same Co-Investment Transaction with any of its Wholly-Owned Investment Subs, the Board will also be informed of, and take into consideration, the relative participation of the Regulated Entity and the Wholly-Owned Investment Sub.

7. The Advisers expects that any portfolio company that is an appropriate investment for a Regulated Entity should also be an appropriate investment for one or more other Regulated Entities and/or one or more Affiliated Funds, with certain exceptions based on available capital or diversification.[9] When considering Potential Co-Investment Transactions for any Regulated Entity, the applicable Adviser will consider only the Objectives and Strategies, Board-Established Criteria,[10] investment policies, investment positions, capital available for investment, and other pertinent factors applicable to that Regulated Entity. Applicants believe that the use of Board-Established Criteria for each of the Regulated Entities is appropriate based on the potential size and scope of HPS' advisory business. Applicants argue that in addition to the other protections offered by the conditions, using Board-Established Criteria in the allocation of Potential Co-Investment Transactions will further reduce the risk of subjectivity in the Adviser's determination of whether an investment opportunity is appropriate for a Regulated Entity. In connection with the Board's annual review of the continued appropriateness of any Board-Established Criteria under condition 9, the Regulated Entity's Adviser will provide information regarding any Co-Investment Transaction (including, but not limited to, Follow-On Investments) effected by the Regulated Entity that did not fit within the then-current Board-Established Criteria.

8. Other than pro rata dispositions and Follow-On Investments as provided in conditions 7 and 8, and after making the determinations required in conditions 1 and 2(a), for each Regulated Entity, the applicable Adviser will present each Potential Co-Investment Transaction and the proposed allocation to the directors or trustees of the Board eligible to vote under section 57(o) of the Act (''Eligible Trustees''), and the ''required majority,'' as defined in section 57(o) of the Act (''Required Majority'')[11] will approve each Co-Investment Transaction prior to any investment by the participating Regulated Entity.

9. With respect to the pro rata dispositions and Follow-On Investments provided in conditions 7 and 8, a Regulated Entity may participate in a pro rata disposition or Follow-On Investment without obtaining prior approval of the Required Majority if, among other things: (i) The proposed participation of each Regulated Entity and each Affiliated Fund in such disposition is proportionate to its outstanding investments in the issuer immediately preceding the disposition or Follow-On Investment, as the case may be; and (ii) the Board of the Regulated Entity has approved that Regulated Entity's participation in pro rata dispositions and Follow-On Investments as being in the best interests of the Regulated Entity. If the Board does not so approve, any such disposition or Follow-On Investment will be submitted to the Regulated Entity's Eligible Trustees. The Board of any Regulated Entity may at any time rescind, suspend, or qualify its approval of pro rata dispositions and Follow-On

[7] All existing entities that currently intend to rely upon the requested Order have been named as applicants. Any other existing or future entity that subsequently relies on the Order will comply with the terms and conditions of the application.

[8] The term ''Wholly-Owned Investment Sub'' means an entity (a) whose sole business purpose is to hold one or more investments on behalf of a Regulated Entity (and, in the case of an SBIC Subsidiary (as defined below), maintain a license under the Small Business Investment Act of 1958, as amended (the ''SBA Act'') and issue debentures guaranteed by the Small Business Administration (the ''SBA''); (b) that is wholly-owned by the Regulated Entity (with the Regulated Entity at all times holding, beneficially and of record, 100% of the voting and economic interests); (c) with respect to which the Regulated Entity's Board has the sole authority to make all determinations with respect to the entity's participation under the conditions of the application; and (d) that would be an investment company but for section 3(c)(1) or 3(c)(7) of the Act. All subsidiaries of the Regulated Entity participating in the Co-Investment Transactions will be Wholly-Owned Investment Subs. The term ''SBIC Subsidiary'' means a Wholly-Owned Investment Sub that is licensed by the SBA to operate under the SBA Act as a small business investment company (an ''SBIC'').

[9] The Regulated Entities, however, will not be obligated to invest, or co-invest, when investment opportunities are referred to them.

[10] ''Board-Established Criteria'' means criteria that the Board of the applicable Regulated Entity may establish from time to time to describe the characteristics of Potential Co-Investment Transactions which would be within the Regulated Entity's then-current Objectives and Strategies that the applicable Adviser should consider as appropriate for the Regulated Entity. If no Board-Established Criteria are in effect for a Regulated Entity, then such Adviser will consider all Potential Co-Investment Transactions that fall within the then-current Objectives and Strategies for that Regulated Entity. Board-Established Criteria will be objective and testable, meaning that they will be based on observable information, such as such as industry/sector of the issuer, minimum earnings before interest, taxes, depreciation and amortization of the issuer, asset class of the investment opportunity or required commitment size, and not on characteristics that involve discretionary assessment. The Adviser to a Regulated Entity may from time to time recommend criteria for the applicable Board's consideration, but Board-Established Criteria will only become effective if approved by a majority of the Independent Trustees. The Independent Trustees of a Regulated Entity may at any time rescind, suspend, or qualify its approval of any Board-Established Criteria, though applicants anticipate that, under normal circumstances, the Board would not modify these criteria more often than quarterly.

[11] In the case of a Regulated Entity that is a registered fund, the Board members that make up the Required Majority will be determined as if the Regulated Entity were a BDC subject to section 57(o).

Investments with the result that all dispositions and/or Follow-On Investments must be submitted to the Eligible Trustees.

10. No Independent Trustee of a Regulated Entity will have a direct or indirect financial interest in any Co-Investment Transaction (other than indirectly through share ownership in one of the Regulated Entities), including any interest in any company whose securities would be acquired in a Co-Investment Transaction.

11. Applicants also represent that if the Advisers, the principal owners of any of the Advisers (the ''Principals''), or any person controlling, controlled by, or under common control with the Advisers or the Principals, and the Affiliated Funds (collectively, the ''Holders'') own in the aggregate more than 25% of the outstanding voting shares of a Regulated Entity (the ''Shares''), then the Holders will vote such Shares as required under condition 14.

Applicants' Legal Analysis

1. Section 57(a)(4) of the Act prohibits certain affiliated persons of a BDC from participating in joint transactions with the BDC or a company controlled by a BDC in contravention of rules as prescribed by the Commission. Under section 57(b)(2) of the Act, any person who is directly or indirectly controlling, controlled by, or under common control with a BDC is subject to section 57(a)(4). Applicants submit that each of the Regulated Entities and Affiliated Funds could be deemed to be a person related to each Regulated Entity in a manner described by section 57(b) by virtue of being under common control. Section 57(i) of the Act provides that, until the Commission prescribes rules under section 57(a)(4), the Commission's rules under section 17(d) of the Act applicable to registered closed-end investment companies will be deemed to apply to transactions subject to section 57(a)(4). Because the Commission has not adopted any rules under section 57(a)(4), rule 17d–1 also applies to joint transactions with Regulated Entities that are BDCs. Section 17(d) of the Act and rule 17d–1 under the Act are applicable to Regulated Entities that are registered closed-end investment companies.

2. Section 17(d) of the Act and rule 17d–1 under the Act prohibit affiliated persons of a registered investment company from participating in joint transactions with the company unless the Commission has granted an order permitting such transactions. In passing upon applications under rule 17d–1, the Commission considers whether the company's participation in the joint transaction is consistent with the provisions, policies, and purposes of the Act and the extent to which such participation is on a basis different from or less advantageous than that of other participants.

3. Applicants state that in the absence of the requested relief, the Regulated Entities would be, in many circumstances, limited in their ability to participate in attractive and appropriate investment opportunities. Applicants believe that the proposed terms and conditions will ensure that the Co-Investment Transactions are consistent with the protection of each Regulated Entity's shareholders and with the purposes intended by the policies and provisions of the Act. Applicants state that the Regulated Entities' participation in the Co-Investment Transactions will be consistent with the provisions, policies, and purposes of the Act and on a basis that is not different from, or less advantageous than, that of other participants.

Applicants' Conditions

Applicants agree that the Order will be subject to the following conditions:

1. (a) Each Adviser will establish, maintain and implement policies and procedures reasonably designed to ensure that it identifies for each Regulated Entity all Potential Co-Investment Transactions that (i) the Adviser considers for any other Regulated Entity or Affiliated Fund and (ii) fall within the Regulated Entity's then-current Objectives and Strategies and Board-Established Criteria.

(b) When an Adviser identifies a Potential Co-Investment Transaction for a Regulated Entity under condition 1(a), the Adviser will make an independent determination of the appropriateness of the investment for the Regulated Entity in light of the Regulated Entity's then-current circumstances.

2. (a) If an Adviser deems a Regulated Entity's participation in any Potential Co-Investment Transaction to be appropriate for the Regulated Entity, the Adviser will then determine an appropriate level of investment for the Regulated Entity.

(b) If the aggregate amount recommended by an Adviser to be invested by the applicable Regulated Entity in the Potential Co-Investment Transaction, together with the amount proposed to be invested by the other participating Regulated Entities and Affiliated Funds, collectively, in the same transaction, exceeds the amount of the investment opportunity, the investment opportunity will be allocated among them pro rata based on each participant's capital available for investment in the asset class being allocated, up to the amount proposed to be invested by each. Each Adviser will provide the Eligible Trustees of each participating Regulated Entity with information concerning each participating party's available capital to assist the Eligible Trustees with their review of the applicable Regulated Entity's investments for compliance with these allocation procedures.

(c) After making the determinations required in conditions 1(b) and 2(a), the applicable Adviser will distribute written information concerning the Potential Co-Investment Transaction (including the amount proposed to be invested by each participating Regulated Entity and each participating Affiliated Fund) to the Eligible Trustees of its participating Regulated Entity for their consideration. A Regulated Entity will enter into a Co-Investment Transaction with one or more other Regulated Entities or Affiliated Funds only if, prior to the Regulated Entity's participation in the Potential Co-Investment Transaction, a Required Majority concludes that:

(i) The terms of the Potential Co-Investment Transaction, including the consideration to be paid, are reasonable and fair to the Regulated Entity and its equity holders and do not involve overreaching in respect of the Regulated Entity or its equity holders on the part of any person concerned;

(ii) the Potential Co-Investment Transaction is consistent with:

(A) The interests of the Regulated Entity's equity holders; and

(B) the Regulated Entity's then-current Objectives and Strategies;

(iii) the investment by any other Regulated Entities or any Affiliated Funds would not disadvantage the Regulated Entity, and participation by the Regulated Entity would not be on a basis different from or less advantageous than that of any other Regulated Entities or any Affiliated Funds; provided that, if any other Regulated Entity or any Affiliated Fund, but not the Regulated Entity itself, gains the right to nominate a director for election to a portfolio company's board of directors or the right to have a board observer or any similar right to participate in the governance or management of the portfolio company, such event shall not be interpreted to prohibit the Required Majority from reaching the conclusions required by this condition 2(c)(iii), if:

(A) The Eligible Trustees will have the right to ratify the selection of such director or board observer, if any; and

(B) the Adviser agrees to, and does, provide periodic reports to the Board of

the Regulated Entity with respect to the actions of such director or the information received by such board observer or obtained through the exercise of any similar right to participate in the governance or management of the portfolio company; and

(C) any fees or other compensation that any Regulated Entity or any Affiliated Fund or any affiliated person of any Regulated Entity or any Affiliated Fund receives in connection with the right of a Regulated Entity or an Affiliated Fund to nominate a director or appoint a board observer or otherwise to participate in the governance or management of the portfolio company will be shared proportionately among the participating Affiliated Funds (who may each, in turn, share its portion with its affiliated persons) and the participating Regulated Entities in accordance with the amount of each party's investment; and

(iv) the proposed investment by the Regulated Entity will not benefit any Adviser, the other Regulated Entities, the Affiliated Funds, or any affiliated person of any of them (other than the parties to the Co-Investment Transaction), except (A) to the extent permitted by condition 13, (B) to the extent permitted by sections 17(e) or 57(k) of the Act, as applicable, (C) indirectly, as a result of an interest in the securities issued by one of the parties to the Co-Investment Transaction, or (D) in the case of fees or other compensation described in condition 2(c)(iii)(C).

3. Each Regulated Entity has the right to decline to participate in any Potential Co-Investment Transaction or to invest less than the amount proposed.

4. The applicable Adviser will present to the Board of each Regulated Entity, on a quarterly basis, a record of all investments in Potential Co-Investment Transactions made by any other Regulated Entity or Affiliated Fund during the preceding quarter that fell within the Regulated Entity's then-current Objectives and Strategies and Board-Established Criteria that were not made available to the Regulated Entity, and an explanation of why the investment opportunities were not offered to the Regulated Entity. All information presented to the Board pursuant to this condition will be kept for the life of the Regulated Entity and at least two years thereafter, and will be subject to examination by the Commission and its staff.

5. Except for Follow-On Investments made in accordance with condition 8,[12] a Regulated Entity will not invest in reliance on the Order in any issuer in which another Regulated Entity, Affiliated Fund, or any affiliated person of another Regulated Entity or Affiliated Fund is an existing investor. The applicable Adviser will maintain books and records that demonstrate compliance with this condition for such Regulated Entity.

6. A Regulated Entity will not participate in any Potential Co-Investment Transaction unless the terms, conditions, price, class of securities to be purchased, settlement date, and registration rights will be the same for each participating Regulated Entity and Affiliated Fund. The grant to another Regulated Entity or an Affiliated Fund, but not the Regulated Entity, of the right to nominate a director for election to a portfolio company's board of directors, the right to have an observer on the board of directors or similar rights to participate in the governance or management of the portfolio company will not be interpreted so as to violate this condition 6, if conditions 2(c)(iii)(A), (B) and (C) are met.

7. (a) If any Regulated Entity or Affiliated Fund elects to sell, exchange or otherwise dispose of an interest in a security that was acquired in a Co-Investment Transaction, the applicable Advisers will:

(i) Notify each Regulated Entity that participated in the Co-Investment Transaction of the proposed disposition at the earliest practical time; and

(ii) formulate a recommendation as to participation by each Regulated Entity in the disposition.

(b) Each Regulated Entity will have the right to participate in such disposition on a proportionate basis, at the same price and on the same terms and conditions as those applicable to the participating Regulated Entities and Affiliated Funds.

(c) A Regulated Entity may participate in such disposition without obtaining prior approval of the Required Majority if: (i) The proposed participation of each Regulated Entity and each Affiliated Fund in such disposition is proportionate to its outstanding investments in the issuer immediately preceding the disposition; (ii) the Board of the Regulated Entity has approved as being in the best interests of the Regulated Entity the ability to participate in such dispositions on a pro rata basis (as described in greater detail in the application); and (iii) the Board of the Regulated Entity is provided on a quarterly basis with a list of all dispositions made in accordance with this condition. In all other cases, the Adviser will provide its written recommendation as to such Regulated Entity's participation to such Regulated Entity's Eligible Trustees, and such Regulated Entity will participate in such disposition solely to the extent that a Required Majority determines that it is in such Regulated Entity's best interests.

(d) Each Regulated Entity and each Affiliated Fund will bear its own expenses in connection with any such disposition.

8. (a) If a Regulated Entity or an Affiliated Fund desires to make a Follow-On Investment in a portfolio company whose securities were acquired in a Co-Investment Transaction, the applicable Advisers will:

(i) Notify each Regulated Entity that participated in the Co-Investment Transaction of the proposed transaction at the earliest practical time; and

(ii) formulate a recommendation as to the proposed participation, including the amount of the proposed Follow-On Investment, by each Regulated Entity.

(b) A Regulated Entity may participate in such Follow-On Investment without obtaining prior approval of the Required Majority if: (i) The proposed participation of each Regulated Entity and each Affiliated Fund in such investment is proportionate to its outstanding investments in the issuer immediately preceding the Follow-On Investment; and (ii) the Board of the Regulated Entity has approved as being in the best interests of the Regulated Entity the ability to participate in Follow-On Investments on a pro rata basis (as described in greater detail in the application). In all other cases, the Adviser will provide its written recommendation as to the Regulated Entity's participation to the Eligible Trustees, and the Regulated Entity will participate in such Follow-On Investment solely to the extent that a Required Majority determines that it is in the Regulated Entity's best interests.

(c) If, with respect to any Follow-On Investment:

(i) The amount of a Follow-On Investment is not based on the Regulated Entities' and the Affiliated Funds' outstanding investments immediately preceding the Follow-On Investment; and

(ii) the aggregate amount recommended by the applicable Advisers to be invested by each

[12] This exception applies only to Follow-On Investments by a Regulated Entity in issuers in which that Regulated Entity already holds investments.

Regulated Entity in the Follow-On Investment, together with the amount proposed to be invested by the participating Affiliated Funds in the same transaction, exceeds the amount of the opportunity; then the amount invested by each such party will be allocated among them pro rata based on each party's capital available for investment in the asset class being allocated, up to the amount proposed to be invested by each.

(d) The acquisition of Follow-On Investments as permitted by this condition will be considered a Co-Investment Transaction for all purposes and subject to the other conditions set forth in the application.

9. The Independent Trustees of each Regulated Entity will be provided quarterly for review all information concerning Potential Co-Investment Transactions that fell within the Regulated Entity's then-current Objectives and Strategies and Board-Established Criteria, including investments in Potential Co-Investment Transactions made by other Regulated Entities and Affiliated Funds, that the Regulated Entity considered but declined to participate in, and concerning Co-Investment Transactions in which the Regulated Entity participated, so that the Independent Trustees may determine whether all Potential Co-Investment Transactions and Co-Investment Transactions during the preceding quarter, including those Potential Co-Investment Transactions which the Regulated Entity considered but declined to participate in, comply with the conditions of the Order. In addition, the Independent Trustees will consider at least annually (a) the continued appropriateness for the Regulated Entity of participating in new and existing Co-Investment Transactions and (b) the continued appropriateness of any Board-Established Criteria.

10. Each Regulated Entity will maintain the records required by section 57(f)(3) of the Act as if each of the Regulated Entities were a BDC and each of the investments permitted under these conditions were approved by the Required Majority under section 57(f).

11. No Independent Trustee of a Regulated Entity will also be a director, general partner, managing member or principal, or otherwise be an ''affiliated person'' (as defined in the Act), of any Affiliated Fund.

12. The expenses, if any, associated with acquiring, holding or disposing of any securities acquired in a Co-Investment Transaction (including, without limitation, the expenses of the distribution of any such securities registered for sale under the Securities Act) will, to the extent not payable by the Advisers under their respective investment advisory agreements with the Regulated Entities and the Affiliated Funds, be shared by the Affiliated Funds and the Regulated Entities in proportion to the relative amounts of the securities held or to be acquired or disposed of, as the case may be.

13. Any transaction fee [13] (including break-up or commitment fees but excluding brokerage or underwriting compensation permitted by section 17(e) or 57(k) of the Act, as applicable) received in connection with a Co-Investment Transaction will be distributed to the participating Regulated Entities and Affiliated Funds on a pro rata basis based on the amounts they invested or committed, as the case may be, in such Co-Investment Transaction. If any transaction fee is to be held by an Adviser pending consummation of the transaction, the fee will be deposited into an account maintained by the Adviser at a bank or banks having the qualifications prescribed in section 26(a)(1) of the Act, and the account will earn a competitive rate of interest that will also be divided pro rata among the participating Regulated Entities and Affiliated Funds based on the amounts they invest in such Co-Investment Transaction. None of the Advisers, the Affiliated Funds, the other Regulated Entities or any affiliated person of the Regulated Entities or Affiliated Funds will receive additional compensation or remuneration of any kind as a result of or in connection with a Co-Investment Transaction (other than (a) in the case of the Regulated Entities and Affiliated Funds, the pro rata transaction fees described above and fees or other compensation described in condition 2(c)(iii)(C), (b) brokerage or underwriting compensation permitted by section 17(e) or 57(k) of the Act or (c) in the case of an Adviser, investment advisory fees paid in accordance with the investment advisory agreement between the Adviser and the Regulated Entity or Affiliated Fund).

14. If the Holders own in the aggregate more than 25 percent of the Shares of a Regulated Entity, then the Holders will vote such Shares in the same percentages as the Regulated Entity's other shareholders (not including the Holders) when voting on (1) the election of directors; (2) the removal of one or more directors; or (3) all other matters under either the Act or applicable State law affecting the Board's composition, size or manner of election.

15. Each Regulated Entity's chief compliance officer, as defined in rule 38a–1(a)(4), will prepare an annual report for its Board each year that evaluates (and documents the basis of that evaluation) the Regulated Entity's compliance with the terms and conditions of the application and the procedures established to achieve such compliance.

For the Commission, by the Division of Investment Management, under delegated authority.

J. Matthew DeLesDernier,

Assistant Secretary.

[FR Doc. 2022–00244 Filed 1–10–22; 8:45 am]

BILLING CODE 8011–01–P

[13] Applicants are not requesting and the staff of the Commission is not providing any relief for transaction fees received in connection with any Co-Investment Transaction.

SECURITIES AND EXCHANGE COMMISSION

[Release No. 34–93900; File No. SR–NYSEARCA–2021–104]

Self-Regulatory Organizations; NYSE Arca, Inc.; Notice of Filing and Immediate Effectiveness of Proposed Rule Change To Amend the NYSE Arca Equities Fees and Charges With Respect to a Regulatory Fee Related to the Central Registration Depository

January 5, 2022.

Pursuant to Section 19(b)(1) [1] of the Securities Exchange Act of 1934 (the ''Act'') [2] and Rule 19b–4 thereunder,[3] notice is hereby given that, on December 22, 2021, NYSE Arca, Inc. (''NYSE Arca'' or the ''Exchange'') filed with the Securities and Exchange Commission (the ''Commission'') the proposed rule change as described in Items I, II, and III below, which Items have been prepared by the self-regulatory organization. The Commission is publishing this notice to solicit comments on the proposed rule change from interested persons.

I. Self-Regulatory Organization's Statement of the Terms of Substance of the Proposed Rule Change

The Exchange proposes to amend the NYSE Arca Equities Fees and Charges (the ''Fee Schedule'') with respect to a regulatory fee related to the Central Registration Depository (''CRD system''), which is collected by the Financial Industry Regulatory Authority, Inc. (''FINRA''). The Exchange proposes to implement the fee change on January 2, 2022. The proposed rule change is

[1] 15 U.S.C. 78s(b)(1).

[2] 15 U.S.C. 78a.

[3] 17 CFR 240.19b–4.

available on the Exchange's website at *www.nyse.com,* at the principal office of the Exchange, and at the Commission's Public Reference Room.

II. Self-Regulatory Organization's Statement of the Purpose of, and Statutory Basis for, the Proposed Rule Change

In its filing with the Commission, the self-regulatory organization included statements concerning the purpose of, and basis for, the proposed rule change and discussed any comments it received on the proposed rule change. The text of those statements may be examined at the places specified in Item IV below. The Exchange has prepared summaries, set forth in sections A, B, and C below, of the most significant parts of such statements.

A. Self-Regulatory Organization's Statement of the Purpose of, and the Statutory Basis for, the Proposed Rule Change

1. Purpose

The Exchange proposes to amend the Fee Schedule with respect to a regulatory fee collected by FINRA for use of the CRD system.[4] The Exchange proposes to implement the fee change on January 2, 2022.

FINRA collects and retains certain regulatory fees via the CRD system for the registration of associated persons of ETP Holders that are not FINRA members (''Non-FINRA ETP Holders'').[5] The CRD system fees are user-based, and there is no distinction in the cost incurred by FINRA if the user is a FINRA member or a Non-FINRA ETP Holder.

FINRA recently amended one of the fees assessed for use of the CRD system.[6] Accordingly, the Exchange proposes to amend the Fee Schedule to mirror the fee assessed by FINRA, which will be implemented concurrently with the amended FINRA fee on January 2, 2022.[7] Specifically, the Exchange proposes to amend the Fee Schedule to modify the fee charged to Non-FINRA ETP Holders for each initial Form U4 filed for the registration of a representative or principal from $100 to $125.[8]

The Exchange notes that the proposed change is not otherwise intended to address any other issues surrounding regulatory fees, and the Exchange is not aware of any problems that ETP Holders would have in complying with the proposed change.

2. Statutory Basis

The Exchange believes that the proposed rule change is consistent with Section 6(b) of the Act,[9] in general, and furthers the objectives of Sections 6(b)(4) and 6(b)(5),[10] in particular, because it provides for the equitable allocation of reasonable dues, fees, and other charges among its members, issuers, and other persons using its facilities and does not unfairly discriminate between customers, issuers, brokers, or dealers.

The Exchange believes that the proposed fee change is reasonable because the fee will be identical to that adopted by FINRA as of January 2, 2022 for use of the CRD system to submit a Form U4. The costs of operating and improving the CRD system are similarly borne by FINRA when a Non-FINRA ETP Holder uses the CRD system; accordingly, the fees collected for such use should, as proposed by the Exchange, mirror the fees assessed to FINRA members. In addition, as FINRA noted in amending its fees, it believes that its proposed pricing structure is reasonable and correlates fees with the components that drive its regulatory costs to the extent feasible.

The Exchange also believes that the proposed fee change provides for the equitable allocation of reasonable fees and other charges, and does not unfairly discriminate between customers, issuers, brokers, and dealers. The fee applies equally to all individuals and firms required to report information to the CRD system, and the proposed change will result in the same regulatory fee being charged to all ETP Holders required to report information to the CRD system and for services performed by FINRA regardless of whether such ETP Holders are FINRA members. Accordingly, the Exchange believes that the fee collected for such use should increase in lockstep with the fee adopted by FINRA as of January 2, 2022, as is proposed by the Exchange.

B. Self-Regulatory Organization's Statement on Burden on Competition

The Exchange does not believe that the proposed rule change will impose any burden on competition that is not necessary or appropriate in furtherance of the purposes of the Act. Specifically, the Exchange believes that the proposed change will reflect the fee that will be assessed by FINRA for Form U4 filings as of January 2, 2022 and will thus result in the same regulatory fees being charged to all ETP Holders required to report information to the CRD system and for services performed by FINRA, regardless of whether or not such ETP Holders are FINRA members.

C. Self-Regulatory Organization's Statement on Comments on the Proposed Rule Change Received From Members, Participants, or Others

No written comments were solicited or received with respect to the proposed rule change.

III. Date of Effectiveness of the Proposed Rule Change and Timing for Commission Action

The foregoing rule change is effective upon filing pursuant to Section 19(b)(3)(A)[11] of the Act and subparagraph (f)(2) of Rule 19b–4[12] thereunder, because it establishes a due, fee, or other charge imposed by the Exchange.

At any time within 60 days of the filing of such proposed rule change, the Commission summarily may temporarily suspend such rule change if it appears to the Commission that such action is necessary or appropriate in the public interest, for the protection of investors, or otherwise in furtherance of the purposes of the Act. If the Commission takes such action, the Commission shall institute proceedings under Section 19(b)(2)(B)[13] of the Act to determine whether the proposed rule

[4] The CRD system is the central licensing and registration system for the U.S. securities industry. The CRD system enables individuals and firms seeking registration with multiple states and self-regulatory organizations to do so by submitting a single form, fingerprint card, and a combined payment of fees to FINRA. Through the CRD system, FINRA maintains the qualification, employment, and disciplinary histories of registered associated persons of broker-dealers.

[5] The Exchange originally adopted fees for use of the CRD system in 2005 and amended those fees in 2013. *See* Securities Exchange Act Release Nos. 51641 (May 2, 2005), 70 FR 24155 (May 6, 2005) (SR–PCX–2005–49); 68588 (January 4, 2013), 78 FR 2473 (January 11, 2013) (SR–NYSEArca–2012–143). While the Exchange lists these fees in its Fee Schedule, it does not collect or retain these fees.

[6] *See* Securities Exchange Act Release No. 90176 (October 14, 2020), 85 FR 66592 (October 20, 2020) (SR–FINRA–2020–032).

[7] The Exchange notes that it has only adopted the CRD system fees charged by FINRA to Non-FINRA ETP Holders when such fees are applicable. In this regard, certain FINRA CRD system fees and requirements are specific to FINRA members, but do not apply to NYSE Arca-only ETP Holders. Non-FINRA ETP Holders have been charged CRD system fees since 2005. *See* note 5, *supra.* ETP Holders that are also FINRA members are charged CRD system fees according to Section 4 of Schedule A to the FINRA By-Laws.

[8] *See* Section 4(b)(1) of Schedule A to the FINRA By-Laws effective on January 2, 2022. This fee is assessed when a Non-FINRA ETP Holder submits an initial Uniform Application for Securities Industry Regulation or Transfer (known as a ''Form U4'') filed by a member in the CRD system to register an individual.

[9] 15 U.S.C. 78f(b).

[10] 15 U.S.C. 78f(b)(4) & (5).

[11] 15 U.S.C. 78s(b)(3)(A).

[12] 17 CFR 240.19b–4(f)(2).

[13] 15 U.S.C. 78s(b)(2)(B).

change should be approved or disapproved.

IV. Solicitation of Comments

Interested persons are invited to submit written data, views, and arguments concerning the foregoing, including whether the proposed rule change is consistent with the Act. Comments may be submitted by any of the following methods:

Electronic Comments

- Use the Commission's internet comment form (*http://www.sec.gov/rules/sro.shtml*); or
- Send an email to *rule-comments@sec.gov.* Please include File Number SR–NYSEARCA–2021–104 on the subject line.

Paper Comments

- Send paper comments in triplicate to: Secretary, Securities and Exchange Commission, 100 F Street NE, Washington, DC 20549–1090.

All submissions should refer to File Number SR–NYSEARCA–2021–104. This file number should be included on the subject line if email is used. To help the Commission process and review your comments more efficiently, please use only one method. The Commission will post all comments on the Commission's internet website (*http://www.sec.gov/rules/sro.shtml*). Copies of the submission, all subsequent amendments, all written statements with respect to the proposed rule change that are filed with the Commission, and all written communications relating to the proposed rule change between the Commission and any person, other than those that may be withheld from the public in accordance with the provisions of 5 U.S.C. 552, will be available for website viewing and printing in the Commission's Public Reference Room, 100 F Street NE, Washington, DC 20549 on official business days between the hours of 10:00 a.m. and 3:00 p.m. Copies of the filing also will be available for inspection and copying at the principal office of the Exchange. All comments received will be posted without change. Persons submitting comments are cautioned that we do not redact or edit personal identifying information from comment submissions. You should submit only information that you wish to make available publicly. All submissions should refer to File Number SR–NYSEARCA–2021–104 and should be submitted on or before February 1, 2022.

For the Commission, by the Division of Trading and Markets, pursuant to delegated authority.[14]

J. Matthew DeLesDernier,

Assistant Secretary.

[FR Doc. 2022–00262 Filed 1–10–22; 8:45 am]

BILLING CODE 8011–01–P

[14] 17 CFR 200.30–3(a)(12).

SECURITIES AND EXCHANGE COMMISSION

[Release No. 34–93901; File No. SR–NYSEAMER–2021–48]

Self-Regulatory Organizations; NYSE American LLC; Notice of Filing and Immediate Effectiveness of Proposed Change To Amend the NYSE American Options Fee Schedule With Respect to a Regulatory Fee Related to the Central Registration Depository

January 5, 2022.

Pursuant to Section 19(b)(1)[1] of the Securities Exchange Act of 1934 (the ''Act'')[2] and Rule 19b–4 thereunder,[3] notice is hereby given that, on December 22, 2021, NYSE American LLC (''NYSE American'' or the ''Exchange'') filed with the Securities and Exchange Commission (the ''Commission'') the proposed rule change as described in Items I, II, and III below, which Items have been prepared by the self-regulatory organization. The Commission is publishing this notice to solicit comments on the proposed rule change from interested persons.

I. Self-Regulatory Organization's Statement of the Terms of Substance of the Proposed Rule Change

The Exchange proposes to amend the NYSE American Options Fee Schedule (the ''Fee Schedule'') with respect to a regulatory fee related to the Central Registration Depository (''CRD system''), which is collected by the Financial Industry Regulatory Authority, Inc. (''FINRA''). The Exchange proposes to implement the fee change on January 2, 2022. The proposed change is available on the Exchange's website at *www.nyse.com,* at the principal office of the Exchange, and at the Commission's Public Reference Room.

II. Self-Regulatory Organization's Statement of the Purpose of, and Statutory Basis for, the Proposed Rule Change

In its filing with the Commission, the self-regulatory organization included statements concerning the purpose of, and basis for, the proposed rule change and discussed any comments it received on the proposed rule change. The text of those statements may be examined at the places specified in Item IV below. The Exchange has prepared summaries, set forth in sections A, B, and C below, of the most significant parts of such statements.

A. Self-Regulatory Organization's Statement of the Purpose of, and the Statutory Basis for, the Proposed Rule Change

1. Purpose

The Exchange proposes to amend the Fee Schedule with respect to a regulatory fee collected by FINRA for use of the CRD system.[4] The Exchange proposes to implement the fee change on January 2, 2022.

FINRA collects and retains certain regulatory fees via the CRD system for the registration of associated persons of ATP Holders that are not FINRA members (''Non-FINRA ATP Holders'').[5] The CRD system fees are user-based, and there is no distinction in the cost incurred by FINRA if the user is a FINRA member or a Non-FINRA ATP Holder.

FINRA recently amended one of the fees assessed for use of the CRD system, which will become effective January 2, 2022.[6] Accordingly, the Exchange proposes to amend the Fee Schedule to mirror the fee assessed by FINRA, which will be implemented concurrently with the amended FINRA fee on January 2, 2022.[7] Specifically, the Exchange proposes to amend the Fee

[1] 15 U.S.C. 78s(b)(1).

[2] 15 U.S.C. 78a.

[3] 17 CFR 240.19b–4.

[4] The CRD system is the central licensing and registration system for the U.S. securities industry. The CRD system enables individuals and firms seeking registration with multiple states and self-regulatory organizations to do so by submitting a single form, fingerprint card, and a combined payment of fees to FINRA. Through the CRD system, FINRA maintains the qualification, employment, and disciplinary histories of registered associated persons of broker-dealers.

[5] The Exchange originally adopted fees for use of the CRD system in 2003 and amended those fees in 2013. *See* Securities Exchange Act Release Nos. 48066 (June 19, 2003), 68 FR 38409 (June 27, 2003) (SR–Amex–2003–49); 68589 (January 4, 2013), 78 FR 2465 (January 11, 2013) (SR–NYSEMKT–2012–89). While the Exchange lists these fees in its Fee Schedule, it does not collect or retain these fees.

[6] *See* Securities Exchange Act Release No. 90176 (October 14, 2020), 85 FR 66592 (October 20, 2020) (SR–FINRA–2020–032).

[7] The Exchange notes that it has only adopted the CRD system fees charged by FINRA to Non-FINRA ATP Holders when such fees are applicable. In this regard, certain FINRA CRD system fees and requirements are specific to FINRA members, but do not apply to NYSE American-only ATP Holders. Non-FINRA ATP Holders have been charged CRD system fees since 2003. *See* note 5, *supra.* ATP Holders that are also FINRA members are charged CRD system fees according to Section 4 of Schedule A to the FINRA By-Laws.

Schedule to modify the fee charged to Non-FINRA ATP Holders for each initial Form U4 filed for the registration of a representative or principal from $100 to $125.[8]

The Exchange notes that the proposed change is not otherwise intended to address any other issues surrounding regulatory fees, and the Exchange is not aware of any problems that ATP Holders would have in complying with the proposed change.

2. Statutory Basis

The Exchange believes that the proposed rule change is consistent with Section 6(b) of the Act,[9] in general, and furthers the objectives of Sections 6(b)(4) and 6(b)(5),[10] in particular, because it provides for the equitable allocation of reasonable dues, fees, and other charges among its members, issuers, and other persons using its facilities and does not unfairly discriminate between customers, issuers, brokers, or dealers.

The Exchange believes that the proposed fee change is reasonable because the fee will be identical to that adopted by FINRA as of January 2, 2022 for use of the CRD system to submit a Form U4. The costs of operating and improving the CRD system are similarly borne by FINRA when a Non-FINRA ATP Holder uses the CRD system; accordingly, the fees collected for such use should, as proposed by the Exchange, mirror the fees assessed to FINRA members. In addition, as FINRA noted in amending its fees, it believes that its proposed pricing structure is reasonable and correlates fees with the components that drive its regulatory costs to the extent feasible.

The Exchange also believes that the proposed fee change provides for the equitable allocation of reasonable fees and other charges, and does not unfairly discriminate between customers, issuers, brokers, and dealers. The fee applies equally to all individuals and firms required to report information to the CRD system, and the proposed change will result in the same regulatory fee being charged to all ATP Holders required to report information to the CRD system and for services performed by FINRA regardless of whether such ATP Holders are FINRA members. Accordingly, the Exchange believes that the fee collected for such use should increase in lockstep with the fee adopted by FINRA as of January 2, 2022, as is proposed by the Exchange.

B. Self-Regulatory Organization's Statement on Burden on Competition

The Exchange does not believe that the proposed rule change will impose any burden on competition that is not necessary or appropriate in furtherance of the purposes of the Act. Specifically, the Exchange believes that the proposed change will update the Fee Schedule to reflect the fee that will be assessed by FINRA for Form U4 filings as of January 2, 2022 and will thus result in the same regulatory fees being charged to all ATP Holders required to report information to the CRD system and for services performed by FINRA regardless of whether or not such ATP Holders are FINRA members.

C. Self-Regulatory Organization's Statement on Comments on the Proposed Rule Change Received From Members, Participants, or Others

No written comments were solicited or received with respect to the proposed rule change.

III. Date of Effectiveness of the Proposed Rule Change and Timing for Commission Action

The foregoing rule change is effective upon filing pursuant to Section 19(b)(3)(A)[11] of the Act and subparagraph (f)(2) of Rule 19b–4[12] thereunder, because it establishes a due, fee, or other charge imposed by the Exchange.

At any time within 60 days of the filing of such proposed rule change, the Commission summarily may temporarily suspend such rule change if it appears to the Commission that such action is necessary or appropriate in the public interest, for the protection of investors, or otherwise in furtherance of the purposes of the Act. If the Commission takes such action, the Commission shall institute proceedings under Section 19(b)(2)(B)[13] of the Act to determine whether the proposed rule change should be approved or disapproved.

IV. Solicitation of Comments

Interested persons are invited to submit written data, views, and arguments concerning the foregoing, including whether the proposed rule change is consistent with the Act.

Comments may be submitted by any of the following methods:

Electronic Comments

- Use the Commission's internet comment form (*http://www.sec.gov/rules/sro.shtml*); or
- Send an email to *rule-comments@sec.gov.* Please include File Number SR–NYSEAMER–2021–48 on the subject line.

Paper Comments

- Send paper comments in triplicate to: Secretary, Securities and Exchange Commission, 100 F Street NE, Washington, DC 20549–1090.

All submissions should refer to File Number SR–NYSEAMER–2021–48. This file number should be included on the subject line if email is used. To help the Commission process and review your comments more efficiently, please use only one method. The Commission will post all comments on the Commission's internet website (*http://www.sec.gov/rules/sro.shtml*). Copies of the submission, all subsequent amendments, all written statements with respect to the proposed rule change that are filed with the Commission, and all written communications relating to the proposed rule change between the Commission and any person, other than those that may be withheld from the public in accordance with the provisions of 5 U.S.C. 552, will be available for website viewing and printing in the Commission's Public Reference Room, 100 F Street NE, Washington, DC 20549 on official business days between the hours of 10:00 a.m. and 3:00 p.m. Copies of the filing also will be available for inspection and copying at the principal office of the Exchange. All comments received will be posted without change. Persons submitting comments are cautioned that we do not redact or edit personal identifying information from comment submissions. You should submit only information that you wish to make available publicly. All submissions should refer to File Number SR–NYSEAMER–2021–48 and should be submitted on or before February 1, 2022.

For the Commission, by the Division of Trading and Markets, pursuant to delegated authority.[14]

J. Matthew DeLesDernier,

Assistant Secretary.

[FR Doc. 2022–00263 Filed 1–10–22; 8:45 am]

BILLING CODE 8011–01–P

[8] *See* Section 4(b)(1) of Schedule A to the FINRA By-Laws effective on January 2, 2022. This fee is assessed when a Non-FINRA ATP Holder submits an initial Uniform Application for Securities Industry Regulation or Transfer (known as a ''Form U4'') filed by a member in the CRD system to register an individual.

[9] 15 U.S.C. 78f(b).

[10] 15 U.S.C. 78f(b)(4) & (5).

[11] 15 U.S.C. 78s(b)(3)(A).

[12] 17 CFR 240.19b–4(f)(2).

[13] 15 U.S.C. 78s(b)(2)(B).

[14] 17 CFR 200.30–3(a)(12).

SECURITIES AND EXCHANGE COMMISSION

[Release No. 34–93899; File No. SR–NYSEARCA–2021–106]

Self-Regulatory Organizations; NYSE Arca, Inc.; Notice of Filing and Immediate Effectiveness of Proposed Rule Change To Amend the NYSE Arca Options Fees and Charges With Respect to a Regulatory Fee Related to the Central Registration Depository

January 5, 2022.

Pursuant to Section 19(b)(1) [1] of the Securities Exchange Act of 1934 (the ''Act'') [2] and Rule 19b–4 thereunder,[3] notice is hereby given that, on December 22, 2021, NYSE Arca, Inc. (''NYSE Arca'' or the ''Exchange'') filed with the Securities and Exchange Commission (the ''Commission'') the proposed rule change as described in Items I, II, and III below, which Items have been prepared by the self-regulatory organization. The Commission is publishing this notice to solicit comments on the proposed rule change from interested persons.

I. Self-Regulatory Organization's Statement of the Terms of Substance of the Proposed Rule Change

The Exchange proposes to amend the NYSE Arca Options Fees and Charges (the ''Fee Schedule'') with respect to a regulatory fee related to the Central Registration Depository (''CRD system''), which is collected by the Financial Industry Regulatory Authority, Inc. (''FINRA''). The Exchange proposes to implement the fee change on January 2, 2022. The proposed rule change is available on the Exchange's website at *www.nyse.com,* at the principal office of the Exchange, and at the Commission's Public Reference Room.

II. Self-Regulatory Organization's Statement of the Purpose of, and Statutory Basis for, the Proposed Rule Change

In its filing with the Commission, the self-regulatory organization included statements concerning the purpose of, and basis for, the proposed rule change and discussed any comments it received on the proposed rule change. The text of those statements may be examined at the places specified in Item IV below. The Exchange has prepared summaries, set forth in sections A, B, and C below, of the most significant parts of such statements.

[1] 15 U.S.C. 78s(b)(1).

[2] 15 U.S.C. 78a.

[3] 17 CFR 240.19b–4.

A. Self-Regulatory Organization's Statement of the Purpose of, and the Statutory Basis for, the Proposed Rule Change

1. Purpose

The Exchange proposes to amend the Fee Schedule with respect to a regulatory fee collected by FINRA for use of the CRD system.[4] The Exchange proposes to implement the fee change on January 2, 2022.

FINRA collects and retains certain regulatory fees via the CRD system for the registration of associated persons of OTP Holders and OTP Firms that are not FINRA members (collectively, ''Non-FINRA OTP Holders'').[5] The CRD system fees are user-based, and there is no distinction in the cost incurred by FINRA if the user is a FINRA member or a Non-FINRA OTP Holder.

FINRA recently amended one of the fees assessed for use of the CRD system.[6] Accordingly, the Exchange proposes to amend the Fee Schedule to mirror the fee assessed by FINRA, which will be implemented concurrently with the amended FINRA fee on January 2, 2022.[7] Specifically, the Exchange proposes to amend the Fee Schedule to modify the fee charged to Non-FINRA OTP Holders for each initial Form U4 filed for the registration of a representative or principal from $100 to $125.[8]

[4] The CRD system is the central licensing and registration system for the U.S. securities industry. The CRD system enables individuals and firms seeking registration with multiple states and self-regulatory organizations to do so by submitting a single form, fingerprint card, and a combined payment of fees to FINRA. Through the CRD system, FINRA maintains the qualification, employment, and disciplinary histories of registered associated persons of broker-dealers.

[5] The Exchange originally adopted fees for use of the CRD system in 2005 and amended those fees in 2013. *See* Securities Exchange Act Release Nos. 51641 (May 2, 2005), 70 FR 24155 (May 6, 2005) (SR–PCX–2005–49); 68590 (January 4, 2013), 78 FR 2470 (January 11, 2013) (SR–NYSEArca–2012–145). While the Exchange lists these fees in its Fee Schedule, it does not collect or retain these fees.

[6] *See* Securities Exchange Act Release No. 90176 (October 14, 2020), 85 FR 66592 (October 20, 2020) (SR–FINRA–2020–032).

[7] The Exchange notes that it has only adopted the CRD system fees charged by FINRA to Non-FINRA OTP Holders when such fees are applicable. In this regard, certain FINRA CRD system fees and requirements are specific to FINRA members, but do not apply to NYSE Arca-only OTP Holders. Non-FINRA OTP Holders have been charged CRD system fees since 2005. *See* note 5, *supra.* OTP Holders that are also FINRA members are charged CRD system fees according to Section 4 of Schedule A to the FINRA By-Laws.

[8] *See* Section 4(b)(1) of Schedule A to the FINRA By-Laws effective on January 2, 2022. This fee is assessed when a Non-FINRA OTP Holder submits an initial Uniform Application for Securities Industry Regulation or Transfer (known as a ''Form U4'') filed by a member in the CRD system to register an individual.

The Exchange notes that the proposed change is not otherwise intended to address any other issues surrounding regulatory fees, and the Exchange is not aware of any problems that OTP Holders would have in complying with the proposed change.

2. Statutory Basis

The Exchange believes that the proposed rule change is consistent with Section 6(b) of the Act,[9] in general, and furthers the objectives of Sections 6(b)(4) and 6(b)(5),[10] in particular, because it provides for the equitable allocation of reasonable dues, fees, and other charges among its members, issuers, and other persons using its facilities and does not unfairly discriminate between customers, issuers, brokers, or dealers.

The Exchange believes that the proposed fee change is reasonable because the fee will be identical to that adopted by FINRA as of January 2, 2022 for use of the CRD system to submit a Form U4. The costs of operating and improving the CRD system are similarly borne by FINRA when a Non-FINRA OTP Holder uses the CRD system; accordingly, the fees collected for such use should, as proposed by the Exchange, mirror the fees assessed to FINRA members. In addition, as FINRA noted in amending its fees, it believes that its proposed pricing structure is reasonable and correlates fees with the components that drive its regulatory costs to the extent feasible.

The Exchange also believes that the proposed fee change provides for the equitable allocation of reasonable fees and other charges, and does not unfairly discriminate between customers, issuers, brokers, and dealers. The fee applies equally to all individuals and firms required to report information to the CRD system, and the proposed change will result in the same regulatory fee being charged to all OTP Holders required to report information to the CRD system and for services performed by FINRA regardless of whether such OTP Holders are FINRA members. Accordingly, the Exchange believes that the fee collected for such use should increase in lockstep with the fee adopted by FINRA as of January 2, 2022, as is proposed by the Exchange.

B. Self-Regulatory Organization's Statement on Burden on Competition

The Exchange does not believe that the proposed rule change will impose any burden on competition that is not necessary or appropriate in furtherance

[9] 15 U.S.C. 78f(b).

[10] 15 U.S.C. 78f(b)(4) & (5).

of the purposes of the Act. Specifically, the Exchange believes that the proposed change will reflect the fee that will be assessed by FINRA for Form U4 filings as of January 2, 2022 and will thus result in the same regulatory fees being charged to all OTP Holders required to report information to the CRD system and for services performed by FINRA, regardless of whether or not such OTP Holders are FINRA members.

C. Self-Regulatory Organization's Statement on Comments on the Proposed Rule Change Received From Members, Participants, or Others

No written comments were solicited or received with respect to the proposed rule change.

III. Date of Effectiveness of the Proposed Rule Change and Timing for Commission Action

The foregoing rule change is effective upon filing pursuant to Section 19(b)(3)(A) [11] of the Act and subparagraph (f)(2) of Rule 19b–4 [12] thereunder, because it establishes a due, fee, or other charge imposed by the Exchange.

At any time within 60 days of the filing of such proposed rule change, the Commission summarily may temporarily suspend such rule change if it appears to the Commission that such action is necessary or appropriate in the public interest, for the protection of investors, or otherwise in furtherance of the purposes of the Act. If the Commission takes such action, the Commission shall institute proceedings under Section 19(b)(2)(B) [13] of the Act to determine whether the proposed rule change should be approved or disapproved.

IV. Solicitation of Comments

Interested persons are invited to submit written data, views, and arguments concerning the foregoing, including whether the proposed rule change is consistent with the Act. Comments may be submitted by any of the following methods:

Electronic Comments

- Use the Commission's internet comment form (*http://www.sec.gov/rules/sro.shtml*); or
- Send an email to *rule-comments@sec.gov.* Please include File Number SR–NYSEARCA–2021–106 on the subject line.

Paper Comments

- Send paper comments in triplicate to: Secretary, Securities and Exchange Commission, 100 F Street NE, Washington, DC 20549–1090.

All submissions should refer to File Number SR–NYSEARCA–2021–106. This file number should be included on the subject line if email is used. To help the Commission process and review your comments more efficiently, please use only one method. The Commission will post all comments on the Commission's internet website (*http://www.sec.gov/rules/sro.shtml*). Copies of the submission, all subsequent amendments, all written statements with respect to the proposed rule change that are filed with the Commission, and all written communications relating to the proposed rule change between the Commission and any person, other than those that may be withheld from the public in accordance with the provisions of 5 U.S.C. 552, will be available for website viewing and printing in the Commission's Public Reference Room, 100 F Street NE, Washington, DC 20549 on official business days between the hours of 10:00 a.m. and 3:00 p.m. Copies of the filing also will be available for inspection and copying at the principal office of the Exchange. All comments received will be posted without change. Persons submitting comments are cautioned that we do not redact or edit personal identifying information from comment submissions. You should submit only information that you wish to make available publicly. All submissions should refer to File Number SR–NYSEARCA–2021–106 and should be submitted on or before February 1, 2022.

For the Commission, by the Division of Trading and Markets, pursuant to delegated authority.[14]

J. Matthew DeLesDernier,

Assistant Secretary.

[FR Doc. 2022–00261 Filed 1–10–22; 8:45 am]

BILLING CODE 8011–01–P

[11] 15 U.S.C. 78s(b)(3)(A).

[12] 17 CFR 240.19b–4(f)(2).

[13] 15 U.S.C. 78s(b)(2)(B).

[14] 17 CFR 200.30–3(a)(12).

SECURITIES AND EXCHANGE COMMISSION

[Investment Company Act Release No. 34463; 812–15217]

ETF Opportunities Trust and Applied Finance Advisors, LLC; Notice of Application

AGENCY: Securities and Exchange Commission (''Commission'').

ACTION: Notice.

Notice of an application under section 6(c) of the Investment Company Act of 1940 (''Act'') for an exemption from section 15(a) of the Act and rule 18f–2 under the Act, as well as from certain disclosure requirements in rule 20a–1 under the Act, Item 19(a)(3) of Form N–1A, Items 22(c)(1)(ii), 22(c)(1)(iii), 22(c)(8) and 22(c)(9) of Schedule 14A under the Securities Exchange Act of 1934, and sections 6–07(2)(a), (b), and (c) of Regulation S–X (''Disclosure Requirements''). The requested exemption would permit an investment adviser to hire and replace certain sub-advisers without shareholder approval and grant relief from the Disclosure Requirements as they relate to fees paid to the sub-advisers.

APPLICANTS: ETF Opportunities Trust (the ''Trust''), a Delaware statutory trust registered under the Act as an open-end management investment company that offers the Applied Finance Valuation Large Cap ETF (the ''Existing Fund''), and Applied Finance Advisors, LLC (the ''Adviser''), a Delaware limited liability company that is registered as an investment adviser under the Investment Advisers Act of 1940 (collectively with the Trust, the ''Applicants'').

FILING DATES: The application was filed on April 6, 2021, and amended on July 29, 2021 and November 10, 2021.

HEARING OR NOTIFICATION OF HEARING: An order granting the application will be issued unless the Commission orders a hearing. Interested persons may request a hearing by emailing the Commission's Secretary at *Secretarys-Office@sec.gov* and serving applicants with a copy of the request by email. Hearing requests should be received by the Commission by 5:30 p.m. on January 31, 2022, and should be accompanied by proof of service on the applicants, in the form of an affidavit or, for lawyers, a certificate of service. Pursuant to rule 0–5 under the Act, hearing requests should state the nature of the writer's interest, any facts bearing upon the desirability of a hearing on the matter, the reason for the request, and the issues contested. Persons who wish to be notified of a hearing may request notification by emailing the Commission's Secretary at *Secretarys-Office@sec.gov.*

ADDRESSES: The Commission: *Secretarys-Office@sec.gov.* Applicants: *kshupe@ccofva.com.*

FOR FURTHER INFORMATION CONTACT: Erin Loomis Moore, Senior Counsel, at (202) 551–6721, or Joseph Toner, Acting Branch Chief, at (202) 551–6825

(Division of Investment Management, Chief Counsel's Office).

SUPPLEMENTARY INFORMATION: The following is a summary of the application. The complete application may be obtained via the Commission's website by searching for the file number, or an applicant using the Company name box, at *http://www.sec.gov/search/search.htm* or by calling (202) 551–8090.

Summary of the Application:

1. The Adviser will serve as the investment adviser to each Sub-Advised Series pursuant to an investment advisory agreement with the Trust (the ''Investment Management Agreement'').[1] Under the terms of each Investment Management Agreement, the Adviser, subject to the supervision of the board of trustees of the Trust (the ''Board'') will provide continuous investment management of the assets of each Sub-Advised Series. Consistent with the terms of each Investment Management Agreement, the Adviser may, subject to the approval of the Board, delegate portfolio management responsibilities of all or a portion of the assets of a Sub-Advised Series to one or more Sub-Advisers.[2] The Adviser will continue to have overall responsibility for the management and investment of the assets of each Sub-Advised Series. The Adviser will evaluate, select and recommend Sub-Advisers to manage the assets of a Sub-Advised Series and will oversee, monitor, and review the Sub-Advisers and their performance and recommend the removal or replacement of Sub-Advisers.

2. Applicants request an order to permit the Adviser, subject to Board approval, to enter into investment sub-advisory agreements with the Sub-Advisers (each, a ''Sub-Advisory Agreement'') and materially amend such Sub-Advisory Agreements without obtaining the shareholder approval required under section 15(a) of the Act and rule 18f–2 under the Act.[3] Applicants also seek an exemption from the Disclosure Requirements to permit a Sub-Advised Series to disclose (as both a dollar amount and a percentage of the Sub-Advised Series' net assets): (a) The aggregate fees paid to the Adviser and any Wholly-Owned Sub-Adviser; (b) the aggregate fees paid to Non-Affiliated Sub-Advisers; and (c) the fee paid to each Affiliated Sub-Adviser (collectively, ''Aggregate Fee Disclosure'').

3. Applicants agree that any order granting the requested relief will be subject to the terms and conditions stated in the application. Such terms and conditions provide for, among other safeguards, appropriate disclosure to Sub-Advised Series shareholders and notification about sub-advisory changes and enhanced Board oversight to protect the interests of the Sub-Advised Series' shareholders.

4. Section 6(c) of the Act provides that the Commission may exempt any person, security, or transaction or any class or classes of persons, securities, or transactions from any provisions of the Act, or any rule thereunder, if such relief is necessary or appropriate in the public interest and consistent with the protection of investors and purposes fairly intended by the policy and provisions of the Act. Applicants believe that the requested relief meets this standard because, as further explained in the application, the Investment Management Agreements will remain subject to shareholder approval while the role of the Sub-Advisers is substantially equivalent to that of individual portfolio managers, so that requiring shareholder approval of Sub-Advisory Agreements would impose unnecessary delays and expenses on the Sub-Advised Series. Applicants believe that the requested relief from the Disclosure Requirements meets this standard because it will improve the Adviser's ability to negotiate fees paid to the Sub-Advisers that are more advantageous for the Sub-Advised Series.

For the Commission, by the Division of Investment Management, under delegated authority.

Dated: January 5, 2022.

J. Matthew DeLesDernier,

Assistant Secretary.

[FR Doc. 2022–00242 Filed 1–10–22; 8:45 am]

BILLING CODE 8011–01–P

[1] Applicants request relief with respect to the named Applicants, including the Existing Fund, as well as to any future series of the Trust and any other existing or future registered open-end management investment company or series thereof that: (a) Is advised by the Adviser, its successors, or any entity controlling, controlled by or under common control with, the Adviser or its successors that serves as the primary adviser to a Sub-Advised Series (each, an ''Adviser''); (b) uses the multi-manager structure described in the application; and (c) complies with the terms and conditions set forth in the application (each, a ''Sub-Advised Series''). For purposes of the requested order, ''successor'' is limited to an entity that results from a reorganization into another jurisdiction or a change in the type of business organization.

[2] A ''Sub-Adviser'' for a Sub-Advised Series is (1) an indirect or direct ''wholly-owned subsidiary'' (as such term is defined in the Act) of the Adviser for that Sub-Advised Series, or (2) a sister company of the Adviser for that Sub-Advised Series that is an indirect or direct ''wholly-owned subsidiary'' of the same company that, indirectly or directly, wholly owns the Adviser (each of (1) and (2) a ''Wholly-Owned Sub-Adviser'' and collectively, the ''Wholly-Owned Sub-Advisers''), or (3) not an ''affiliated person'' (as such term is defined in section 2(a)(3) of the Act) of the Sub-Advised Series, the Trust, or the Adviser, except to the extent that an affiliation arises solely because the Sub-Adviser serves as a sub-adviser to a Sub-Advised Series or as an investment adviser or sub-adviser to any series of the Trust other than the Sub-Advised Series (''Non-Affiliated Sub-Adviser'').

[3] The requested relief will not extend to any sub-adviser, other than a Wholly-Owned Sub-Adviser, who is an affiliated person, as defined in section 2(a)(3) of the Act, of the Sub-Advised Series or of the Adviser, other than by reason of serving as a sub-adviser to one or more of the Sub-Advised Series or as an investment adviser or sub-adviser to any series of the Trust other than the Sub-Advised Series (''Affiliated Sub-Adviser'').

SECURITIES AND EXCHANGE COMMISSION

[Release No. 34–93906; File No. SR–ICEEU–2021–026]

Self-Regulatory Organizations; ICE Clear Europe Limited; Notice of Filing and Immediate Effectiveness of Proposed Rule Change Relating to Amendments to the ICE Clear Europe Futures & Options Default Management Policy

January 5, 2022.

Pursuant to Section 19(b)(1) of the Securities Exchange Act of 1934 (''Act''),[1] and Rule 19b–4 thereunder,[2] notice is hereby given that on December 22, 2021, ICE Clear Europe Limited (''ICE Clear Europe'' or the ''Clearing House'') filed with the Securities and Exchange Commission (''Commission'') the proposed rule changes described in Items I, II and III below, which Items have been prepared primarily by ICE Clear Europe. ICE Clear Europe filed the proposed rule change pursuant to Section 19(b)(3)(A) of the Act[3] and Rule 19b–4(f)(4)(ii) thereunder,[4] such that the proposed rule change was immediately effective upon filing with the Commission. The Commission is publishing this notice to solicit comments on the proposed rule change from interested persons.

I. Clearing Agency's Statement of the Terms of Substance of the Proposed Rule Change

The principal purpose of the proposed amendments is for ICE Clear Europe to modify its Futures & Options Default Management Policy (''F&O Default Management Policy'' or ''Policy'') to make certain clarifications and updates.

[1] 15 U.S.C. 78s(b)(1).

[2] 17 CFR 240.19b–4.

[3] 15 U.S.C. 78s(b)(3)(A).

[4] 17 CFR 240.19b–4(f)(4)(ii).

II. Clearing Agency's Statement of the Purpose of, and Statutory Basis for, the Proposed Rule Change

In its filing with the Commission, ICE Clear Europe included statements concerning the purpose of and basis for the proposed rule change and discussed any comments it received on the proposed rule change. The text of these statements may be examined at the places specified in Item IV below. ICE Clear Europe has prepared summaries, set forth in sections (A), (B), and (C) below, of the most significant aspects of such statements.

(A) Clearing Agency's Statement of the Purpose of, and Statutory Basis for, the Proposed Rule Change

(a) Purpose

ICE Clear Europe is proposing to amend its F&O Default Management Policy to (i) further describe certain aspects of the background UK legal framework applicable to default management, (ii) update the composition of the Clearing House's default management committee, (iii) remove as unnecessary certain operational steps ICE Clear Europe will take in order to suspend a Defaulter's trading access, (iv) update and clarify the procedures related to hedging or liquidation of a Defaulter's positions, (v) remove certain details around the auction process that are set out in other Clearing House documentation; (vi) clarify certain procedures for intra-group information sharing, (vii) revise the description of the Clearing House's default testing, (viii) revise and remove certain appendices in accordance with the other changes made in the Policy, and (ix) make other various drafting clarifications and improvements.

The background discussion of Points of Law applicable to default management would be revised to provide certain clarification and simplifications. Specifically, the amendments clarify the ability of the Clearing House to transfer client positions and collateral in an omnibus client account to a single solvent Clearing Member provided that all clients in the omnibus account agree to such transfer. The amendments would also clarify the benefits of legal certainty provided to actions taken by the Clearing House in accordance with its default rules under Part VII of the UK Companies Act. Other non-substantive drafting clarifications and grammatical updates would be made to improve readability.[5] These amendments do not reflect a change in law but are intended to further clarify state the existing UK legal background principles.

The section addressing the actions to be taken by the Clearing House immediately following declaration of an Event of Default would be updated to bifurcate the composition of the Clearing House's internal default management committee to personnel that are always required to be present and personnel (or deputies) that may attend if required. Specifically, the default management committee would, at minimum, consist of the President, Head of Clearing Risk and Chief Risk Officer. The Chief Operating Officer or Head of Operations, Head of Treasury, Head of Legal and Head of Compliance may attend if required. Additionally, the amendments would provide that legal advisors or counsel to the Clearing House may also be present where required. Conforming changes would be made in other sections of the policy. The amendments would also remove from a statement regarding the segmenting of F&O Guaranty Fund resources in the waterfall by asset class, and related information. The construction and composition of the F&O Guaranty Fund is set out in the Rules and Procedures and existing F&O Guaranty Fund Policy, and the Clearing House does not believe it needs to be set out in the Policy.

Amendments would also remove provisions relating to an interest rate swap default management committee, which are not used as the Clearing House does not clear interest rate swaps.

Procedures for suspending the trading access of a defaulting Clearing Member would also be clarified. The amendments would clarify that the Clearing House may (but is not obligated to) instruct the relevant market surveillance department and helpdesk to disable trading accesses of the defaulter. The amendments would also remove certain operational details as to the business hours of the ICE helpdesk and the scope of denial of trading access that the Clearing House believes are unnecessary for the Policy. The amendments are not intended to reflect a change in practice but further describe document existing practice.

In the section relating to identifying and hedging market exposure from the defaulter's positions, amendments would add that the Clearing House may seek to delta hedge the positions through its Exchanges, in addition to conducting such hedging through brokers (as referenced in the current Policy). The amendments would also remove a statement that priority should be giving to hedging products contributing the greatest original margin requirement. ICE Clear Europe does not believe the limitation is necessary, as the hedging strategy should take into account the particular circumstances and market conditions at the time. Additionally, information describing the processes for entering positions into the ICE Clear Europe internal risk database would be removed as unnecessary operational detail.

Provisions addressing the treatment of physically deliverable positions nearing expiry would be updated to clarify that once a default has been declared, the Operations Department would be responsible for taking control and may suspend delivery settlements due back to the Defaulter, to implement the Clearing House's existing rights under the Rules. Amendments would also clarify that while the Clearing House may need to close out positions prior to the commencement of the delivery process, it would not necessarily be obligated to do so. In the Clearing House's view, this change would provide appropriate flexibility in managing such positions of a defaulter.

The section relating to liquidation of remaining positions would be amended to reference all positions (not merely house positions), to remove certain details about specific hedging strategies and to remove a statement as to the order of preference of different options. ICE Clear Europe believes that it is appropriate in default management to have flexibility as to the particular type of hedging or liquidation actions to be taken, in light of the nature of the positions and market conditions at the time, and accordingly it is not desirable to state in advance which default management option is preferable. Similarly, the Clearing House does not believe it is necessary to specify particular hedging strategies in the Policy; the appropriate strategy in a particular default scenario should be selected at the time.

Amendments would also provide that the Clearing House default management committee may seek advice from third party traders, in addition to traders of non-defaulting Clearing Members, with respect to liquidating the positions in a complex trading book. The amendments would remove as unnecessary a requirement that the senior management team first approach representatives of Clearing Members on the F&O product risk committee for assistance.

Certain clarifications to the Policy relating to the conduct of a default

[5] The amendments to this discussion do not affect the existing statement, consistent with the Rules, that with respect to FCM/BD Clearing Members in default, the customer accounts are intended to be treated in accordance with applicable U.S. law.

auction and related auction portfolio disclosures would be made, including to be consistent with the existing published F&O Auction Terms. In particular, statements that the portfolio would be hedged before commencing the auction would be removed, as it is not necessary in all cases under the Rules or Procedures that a portfolio be hedged before being auctioned. References to Clearing Members would be replaced with more general references to auction participants, as the F&O Auction Terms permit participation by non-Clearing Members in certain circumstances. In line with the changes described above to remove references to the IRS Default Committee, information relating to the IRS Default Committee's role in directing the auction process would be removed. A detailed description and example of bidding mechanics would be removed as such details are addressed in the published F&O Auction Terms.

Section 10.1 (Intra-group Information Sharing) would be amended to remove certain details about coordination between ICE Group entities that ICE Clear Europe believes are unnecessary under the Policy. As proposed to be revised, the ICE Clear Europe President would remain responsible for notifying counterparts at other ICE Group entities where the defaulter is active in other relevant markets. Specific details about the persons to be notified, and relevant backup personnel, have been removed as unnecessary for the Policy.

The section of the Policy relating to F&O default testing would be revised to reflect further describe current testing purposes and practices and make other enhancements. As revised, the Clearing House would conduct testing on an annual basis with compulsory participation of Clearing members, with the goal of testing the responsibilities of each Clearing House department, the systems and tools in the default management process and external parties' preparation and understanding of default procedures. The amendments would also revise and clarify certain elements that comprise a default management test plan. As a result, Former Appendix A—Default Test Plan (Summary) would be removed as unnecessary given the updated description of default testing in the Policy. The subsequent appendices would be renumbered accordingly.

Appendix B (Trade Procedure) (formerly Appendix C) would be updated in respect of the description of the frequency of certain trade tests. Specifically, the amendments would provide that Test trades would take place according to the Multi-Year Default Management Plan, instead of monthly or quarterly. Additionally, the amendments would remove an incorrect reference to CDS Clearing Members (which are not as such subject to an F&O policy).

Appendix C (formerly Appendix D) relating to regulatory reporting would be replaced with a new schedule of default management information to be shared with the Bank of England under applicable regulations, including information as to actions taken prior to and following the default, summary of positions and relevant margin and guaranty fund contributions, and certain other exposures.

Other drafting clarifications and other changes would be made throughout the Policy to make non-substantive typographical and other corrections, including replacing ''Original Margin'' with ''Initial Margin'' (and related abbreviations throughout), to conform to the terminology used in the Rules and Procedures.

(b) Statutory Basis

ICE Clear Europe believes that the proposed amendments to the F&O Default Management Policy are consistent with the requirements of Section 17A of the Act [6] and the regulations thereunder applicable to it. In particular, Section 17A(b)(3)(F) of the Act [7] requires, among other things, that the rules of a clearing agency be designed to promote the prompt and accurate clearance and settlement of securities transactions and, to the extent applicable, derivative agreements, contracts, and transactions, the safeguarding of securities and funds in the custody or control of the clearing agency or for which it is responsible, and the protection of investors and the public interest.

The proposed changes to the F&O Default Management Policy are designed to clarify and strengthen ICE Clear Europe's procedures for managing the risk of default losses. The amendments would, among other matters, update the composition of the default management committee, clarify certain matters relating to the background UK legal framework for default management, clarify and update certain procedures around hedging and liquidation of the risk of a defaulter's positions, clarify testing procedures, and ensure consistency with Clearing House Rules and Procedures, including those relating to auctions. Through better managing risks in Clearing Member default scenarios in this manner, the proposed amendments to the F&O Default Management Policy would promote the stability of the Clearing House and the prompt and accurate clearance and settlement of cleared contracts. The enhanced default risk management is therefore also generally consistent with the protection of investors and the public interest in the safe operation of the Clearing House. (ICE Clear Europe would not expect the amendments to affect materially the safeguarding of securities and funds in ICE Clear Europe's custody or control or for which it is responsible.) Accordingly, the amendments satisfy the requirements of Section 17A(b)(3)(F).[8]

The amendments to the F&O Default Management Policy are also consistent with relevant provisions of Rule 17Ad–22.[9] Rule 17Ad–22(e)(3)(i) provides that ''[e]ach covered clearing agency shall establish, implement, maintain and enforce written policies and procedures reasonable designed to, as applicable [. . .] identify, measure, monitor and manage the range of risks that arise in or are borne by the covered clearing agency''.[10] The amendments to the F&O Default Management Policy are intended to clarify the Clearing House's policies and practices that relate to default management, for consistency with relevant Rules and Procedures and to make various clarifications and other improvements. In ICE Clear Europe's view, the amendments would enhance overall risk management, consistent with the requirements of Rule 17Ad–22(e)(3)(i).[11]

Rule 17Ad–22(e)(2) provides that ''[e]ach covered clearing agency shall establish, implement, maintain and enforce written policies and procedures reasonable designed to, as applicable [. . .] provide for governance arrangements that are clear and transparent'' [12] and ''[s]pecify clear and direct lines of responsibility''.[13] The amendments to the F&O Default Management Policy would clarify certain responsibilities of the Clearing House's committees and personnel in relation to default management. The amendments would also remove unused provisions related to the IRS Default Management Committee. In ICE Clear Europe's view, the amendments are therefore consistent with the requirements of Rule 17Ad–22(e)(2).[14]

[6] 15 U.S.C. 78q–1.

[7] 15 U.S.C. 78q–1(b)(3)(F).

[8] 15 U.S.C. 78q–1(b)(3)(F).

[9] 17 CFR 240.17Ad–22.

[10] 17 CFR 240.17Ad–22(e)(3)(i).

[11] 17 CFR 240.17Ad–22(e)(3)(i).

[12] 17 CFR 240.17Ad–22(e)(2)(i).

[13] 17 CFR 240.17Ad–22(e)(2)(v).

[14] 17 CFR 240.17Ad–22(e)(2).

In addition, ICE Clear Europe believes the amendments satisfy Rule 17Ad–22(e)(13),[15] which provides that ''[e]ach covered clearing agency shall establish, implement, maintain and enforce written policies and procedures reasonable designed to, as applicable [. . .] ensure that the covered clearing agency has the authority and operational capacity to take timely action to contain losses and liquidity demands and continue to meet its obligations by, at a minimum, requiring the covered clearing agency's participants and, when practicable, other stakeholders to participate in the testing and review of its default procedures, including any close-out procedures, at least annually.'' As discussed above, the proposed amendments would enhance ICE Clear Europe's overall default management processes, including those relating to hedging and liquidation of the defaulter's positions. In addition, the amendments would enhance default testing practices, including to provide explicitly for annual compulsory participation by Clearing Members and further describe the purposes of such testing. Other amendments would ensure the Policy remains consistent with the F&O Auction Terms. Overall, the amendments will thus ensure that the Clearing House has clear processes in place to manage Clearing Member defaults and be able to continue to meet the Clearing House's obligations in default scenarios. The amendments overall strengthen ICE Clear Europe's ability to contain losses in a manner consistent with the requirements of Rule 17Ad–22(e)(13).[16]

(B) Clearing Agency's Statement on Burden on Competition

ICE Clear Europe does not believe the proposed amendments would have any impact, or impose any burden, on competition not necessary or appropriate in furtherance of the purposes of the Act. The amendments are being adopted to update and clarify the Clearing House's F&O Default Management Policy, which relates to the Clearing House's internal processes for addressing risks posed by F&O Clearing Member defaults. The amendments do not change the obligations of Clearing Members under the Rules or Procedures. Accordingly, ICE Clear Europe does not believe the amendments would affect the costs of clearing, the ability of market participants to access clearing, or the market for clearing services generally. Although the Policy does state certain obligations of Clearing Members to participate in annual default testing, ICE Clear Europe believes this is appropriate in light of regulatory requirements and the importance of such testing to the default management process. Therefore, ICE Clear Europe does not believe the proposed rule change imposes any burden on competition that is not necessary or appropriate in furtherance of the purposes of the Act.

(C) Clearing Agency's Statement on Comments on the Proposed Rule Change Received From Members, Participants or Others

Written comments relating to the proposed amendments have not been solicited or received by ICE Clear Europe. ICE Clear Europe will notify the Commission of any written comments received with respect to the proposed rule change.

III. Date of Effectiveness of the Proposed Rule Change and Timing for Commission Action

The foregoing rule change has become effective pursuant to Section 19(b)(3)(A) of the Act [17] and paragraph (f) of Rule 19b–4 [18] thereunder. At any time within 60 days of the filing of the proposed rule change, the Commission summarily may temporarily suspend such rule change if it appears to the Commission that such action is necessary or appropriate in the public interest, for the protection of investors, or otherwise in furtherance of the purposes of the Act.

IV. Solicitation of Comments

Interested persons are invited to submit written data, views, and arguments concerning the foregoing, including whether the proposed rule change is consistent with the Act. Comments may be submitted by any of the following methods:

Electronic Comments

- Use the Commission's internet comment form (*http://www.sec.gov/rules/sro.shtml*) or
- Send an email to *rule-comments@sec.gov.* Please include File Number SR–ICEEU–2021–026 on the subject line.

Paper Comments

- Send paper comments in triplicate to Secretary, Securities and Exchange Commission, 100 F Street NE, Washington, DC 20549–1090.

All submissions should refer to File Number SR–ICEEU–2021–026. This file number should be included on the subject line if email is used. To help the Commission process and review your comments more efficiently, please use only one method. The Commission will post all comments on the Commission's internet website (*http://www.sec.gov/rules/sro.shtml*). Copies of the submission, all subsequent amendments, all written statements with respect to the proposed rule change that are filed with the Commission, and all written communications relating to the proposed rule change between the Commission and any person, other than those that may be withheld from the public in accordance with the provisions of 5 U.S.C. 552, will be available for website viewing and printing in the Commission's Public Reference Room, 100 F Street NE, Washington, DC 20549, on official business days between the hours of 10:00 a.m. and 3:00 p.m. Copies of such filings will also be available for inspection and copying at the principal office of ICE Clear Europe and on ICE Clear Europe's website at *https://www.theice.com/clear-europe/regulation.* All comments received will be posted without change. Persons submitting comments are cautioned that we do not redact or edit personal identifying information from comment submissions. You should submit only information that you wish to make available publicly. All submissions should refer to File Number SR–ICEEU–2021–026 and should be submitted on or before February 1, 2022.

For the Commission, by the Division of Trading and Markets, pursuant to delegated authority.[19]

J. Matthew DeLesDernier,

Assistant Secretary.

[FR Doc. 2022–00267 Filed 1–10–22; 8:45 am]

BILLING CODE 8011–01–P

[15] 17 CFR 240.17Ad–22(e)(13).

[16] 17 CFR 240.17Ad–22(e)(13).

[17] 15 U.S.C. 78s(b)(3)(A).

[18] 17 CFR 240.19b–4(f).

[19] 17 CFR 200.30–3(a)(12).

SECURITIES AND EXCHANGE COMMISSION

[SEC File No. 270–638, OMB Control No. 3235–0687]

Submission Collection; Comment Request; Extension: Rule 239

Upon Written Request Copies Available From:, Securities and Exchange Commission, Office of FOIA Services, 100 F Street NE, Washington, DC 20549–2736

Notice is hereby given that, pursuant to the Paperwork Reduction Act of 1995 (44 U.S.C. 3501 *et seq.*), the Securities and Exchange Commission

(''Commission'') has submitted to the Office of Management and Budget this request for extension of the previously approved collection of information discussed below.

Rule 239 (17 CFR 230.239) provides exemptions under the Securities Act of 1933 (15 U.S.C. 77a *et seq.*), the Securities Exchange Act of 1934 (15 U.S.C. 78a *et seq.*) and the Trust Indenture Act of 1939 (U.S.C. 77aaa *et seq.*) for security-based swaps issued by certain clearing agencies satisfying certain conditions. The purpose of the information required by Rule 239 is to make certain information about security-based swaps that may be cleared by the registered or the exempt clearing agencies available to eligible contract participants and other market participants. We estimate that each registered or exempt clearing agency issuing security-based swaps in its function as a central counterparty will spend approximately 2 hours each time it provides or update the information in its agreements relating to security-based swaps or on its website. We estimate that each registered or exempt clearing agency will provide or update the information approximately 20 times per year. In addition, we estimate that 75% of the 2 hours per response (1.5 hours) is prepared internally by the clearing agency for a total annual reporting burden of 180 hours (1.5 hours per response × 20 times × 6 respondents).

An agency may not conduct or sponsor, and a person is not required to respond to, a collection of information unless it displays a currently valid control number.

The public may view background documentation for this information collection at the following website: *www.reginfo.gov.* Find this particular information collection by selecting ''Currently under 30-day Review—Open for Public Comments'' or by using the search function. Written comments and recommendations for the proposed information collection should be sent within 30 days of publication of this notice to (i) *www.reginfo.gov/public/do/PRAMain* and (ii) David Bottom, Director/Chief Information Officer, Securities and Exchange Commission, c/o John Pezzullo, 100 F Street NE, Washington, DC 20549, or by sending an email to: *PRA_Mailbox@sec.gov.*

Dated: January 5, 2022.

J. Matthew DeLesDernier,

Assistant Secretary.

[FR Doc. 2022–00259 Filed 1–10–22; 8:45 am]

BILLING CODE 8011–01–P

SECURITIES AND EXCHANGE COMMISSION

[Release No. 34–93902; File No. SR–NYSEAMER–2021–47]

Self-Regulatory Organizations; NYSE American LLC; Notice of Filing and Immediate Effectiveness of Proposed Change To Amend the NYSE American Equities Price List With Respect to a Regulatory Fee Related to the Central Registration Depository

January 5, 2022.

Pursuant to Section 19(b)(1) [1] of the Securities Exchange Act of 1934 (the ''Act'') [2] and Rule 19b–4 thereunder,[3] notice is hereby given that, on December 22, 2021, NYSE American LLC (''NYSE American'' or the ''Exchange'') filed with the Securities and Exchange Commission (the ''Commission'') the proposed rule change as described in Items I, II, and III below, which Items have been prepared by the self-regulatory organization. The Commission is publishing this notice to solicit comments on the proposed rule change from interested persons.

I. Self-Regulatory Organization's Statement of the Terms of Substance of the Proposed Rule Change

The Exchange proposes to amend the NYSE American Equities Price List (the ''Price List'') with respect to a regulatory fee related to the Central Registration Depository (''CRD system''), which is collected by the Financial Industry Regulatory Authority, Inc. (''FINRA''). The Exchange proposes to implement the fee change on January 2, 2022. The proposed change is available on the Exchange's website at *www.nyse.com,* at the principal office of the Exchange, and at the Commission's Public Reference Room.

II. Self-Regulatory Organization's Statement of the Purpose of, and Statutory Basis for, the Proposed Rule Change

In its filing with the Commission, the self-regulatory organization included statements concerning the purpose of, and basis for, the proposed rule change and discussed any comments it received on the proposed rule change. The text of those statements may be examined at the places specified in Item IV below. The Exchange has prepared summaries, set forth in sections A, B, and C below, of the most significant parts of such statements.

[1] 15 U.S.C. 78s(b)(1).

[2] 15 U.S.C. 78a.

[3] 17 CFR 240.19b–4.

A. Self-Regulatory Organization's Statement of the Purpose of, and the Statutory Basis for, the Proposed Rule Change

1. Purpose

The Exchange proposes to amend the Price List with respect to a regulatory fee collected by FINRA for use of the CRD system.[4] The Exchange proposes to implement the fee change on January 2, 2022.

FINRA collects and retains certain regulatory fees via the CRD system for the registration of associated persons of ATP Holders that are not FINRA members (''Non-FINRA ATP Holders'').[5] The CRD system fees are user-based, and there is no distinction in the cost incurred by FINRA if the user is a FINRA member or a Non-FINRA ATP Holder.

FINRA recently amended one of the fees assessed for use of the CRD system.[6] Accordingly, the Exchange proposes to amend the Price List to mirror the fee assessed by FINRA, which will be implemented concurrently with the amended FINRA fee on January 2, 2022.[7] Specifically, the Exchange proposes to amend the Price List to modify the fee charged to Non-FINRA ATP Holders for each initial Form U4 filed for the registration of a representative or principal from $100 to $125.[8]

[4] The CRD system is the central licensing and registration system for the U.S. securities industry. The CRD system enables individuals and firms seeking registration with multiple states and self-regulatory organizations to do so by submitting a single form, fingerprint card, and a combined payment of fees to FINRA. Through the CRD system, FINRA maintains the qualification, employment, and disciplinary histories of registered associated persons of broker-dealers.

[5] The Exchange originally adopted fees for use of the CRD system in 2003 and amended those fees in 2013. *See* Securities Exchange Act Release Nos. 48066 (June 19, 2003), 68 FR 38409 (June 27, 2003) (SR-Amex-2003–49); 68630 (January 11, 2013), 78 FR 6152 (January 29, 2013) (SR–NYSEMKT–2013–01). While the Exchange lists these fees in its Price List, it does not collect or retain these fees.

[6] *See* Securities Exchange Act Release No. 90176 (October 14, 2020), 85 FR 66592 (October 20, 2020) (SR–FINRA–2020–032).

[7] The Exchange notes that it has only adopted the CRD system fees charged by FINRA to Non-FINRA ATP Holders when such fees are applicable. In this regard, certain FINRA CRD system fees and requirements are specific to FINRA members, but do not apply to NYSE American-only ATP Holders. Non-FINRA ATP Holders have been charged CRD system fees since 2003. *See* note 5, *supra.* ATP Holders that are also FINRA members are charged CRD system fees according to Section 4 of Schedule A to the FINRA By-Laws.

[8] *See* Section 4(b)(1) of Schedule A to the FINRA By-Laws effective on January 2, 2022. This fee is assessed when a Non-FINRA ATP Holder submits an initial Uniform Application for Securities Industry Regulation or Transfer (known as a ''Form U4'') filed by a member in the CRD system to register an individual.

The Exchange notes that the proposed change is not otherwise intended to address any other issues surrounding regulatory fees, and the Exchange is not aware of any problems that ATP Holders would have in complying with the proposed change.

2. Statutory Basis

The Exchange believes that the proposed rule change is consistent with Section 6(b) of the Act,[9] in general, and furthers the objectives of Sections 6(b)(4) and 6(b)(5),[10] in particular, because it provides for the equitable allocation of reasonable dues, fees, and other charges among its members, issuers, and other persons using its facilities and does not unfairly discriminate between customers, issuers, brokers, or dealers.

The Exchange believes that the proposed fee change is reasonable because the fee will be identical to that adopted by FINRA as of January 2, 2022 for use of the CRD system to submit a Form U4. The costs of operating and improving the CRD system are similarly borne by FINRA when a Non-FINRA ATP Holder uses the CRD system; accordingly, the fees collected for such use should, as proposed by the Exchange, mirror the fees assessed to FINRA members. In addition, as FINRA noted in amending its fees, it believes that its proposed pricing structure is reasonable and correlates fees with the components that drive its regulatory costs to the extent feasible.

The Exchange also believes that the proposed fee change provides for the equitable allocation of reasonable fees and other charges, and does not unfairly discriminate between customers, issuers, brokers, and dealers. The fee applies equally to all individuals and firms required to report information to the CRD system, and the proposed change will result in the same regulatory fee being charged to all ATP Holders required to report information to the CRD system and for services performed by FINRA regardless of whether such ATP Holders are FINRA members. Accordingly, the Exchange believes that the fee collected for such use should increase in lockstep with the fee adopted by FINRA as of January 2, 2022, as is proposed by the Exchange.

B. Self-Regulatory Organization's Statement on Burden on Competition

The Exchange does not believe that the proposed rule change will impose any burden on competition that is not necessary or appropriate in furtherance of the purposes of the Act. Specifically, the Exchange believes that the proposed change will reflect the fee that will be assessed by FINRA for Form U4 filings as of January 2, 2022 and will thus result in the same regulatory fees being charged to all ATP Holders required to report information to the CRD system and for services performed by FINRA, regardless of whether or not such ATP Holders are FINRA members.

C. Self-Regulatory Organization's Statement on Comments on the Proposed Rule Change Received From Members, Participants, or Others

No written comments were solicited or received with respect to the proposed rule change.

III. Date of Effectiveness of the Proposed Rule Change and Timing for Commission Action

The foregoing rule change is effective upon filing pursuant to Section 19(b)(3)(A) [11] of the Act and subparagraph (f)(2) of Rule 19b–4 [12] thereunder, because it establishes a due, fee, or other charge imposed by the Exchange.

At any time within 60 days of the filing of such proposed rule change, the Commission summarily may temporarily suspend such rule change if it appears to the Commission that such action is necessary or appropriate in the public interest, for the protection of investors, or otherwise in furtherance of the purposes of the Act. If the Commission takes such action, the Commission shall institute proceedings under Section 19(b)(2)(B) [13] of the Act to determine whether the proposed rule change should be approved or disapproved.

IV. Solicitation of Comments

Interested persons are invited to submit written data, views, and arguments concerning the foregoing, including whether the proposed rule change is consistent with the Act. Comments may be submitted by any of the following methods:

Electronic Comments

- Use the Commission's internet comment form (*http://www.sec.gov/rules/sro.shtml*); or
- Send an email to *rule-comments@sec.gov.* Please include File Number SR–NYSEAMER–2021–47 on the subject line.

Paper Comments

- Send paper comments in triplicate to: Secretary, Securities and Exchange Commission, 100 F Street NE, Washington, DC 20549–1090.

All submissions should refer to File Number SR–NYSEAMER–2021–47. This file number should be included on the subject line if email is used. To help the Commission process and review your comments more efficiently, please use only one method. The Commission will post all comments on the Commission's internet website (*http://www.sec.gov/rules/sro.shtml*). Copies of the submission, all subsequent amendments, all written statements with respect to the proposed rule change that are filed with the Commission, and all written communications relating to the proposed rule change between the Commission and any person, other than those that may be withheld from the public in accordance with the provisions of 5 U.S.C. 552, will be available for website viewing and printing in the Commission's Public Reference Room, 100 F Street NE, Washington, DC 20549 on official business days between the hours of 10:00 a.m. and 3:00 p.m. Copies of the filing also will be available for inspection and copying at the principal office of the Exchange. All comments received will be posted without change. Persons submitting comments are cautioned that we do not redact or edit personal identifying information from comment submissions. You should submit only information that you wish to make available publicly. All submissions should refer to File Number SR–NYSEAMER–2021–47 and should be submitted on or before February 1, 2022.

For the Commission, by the Division of Trading and Markets, pursuant to delegated authority.[14]

J. Matthew DeLesDernier,

Assistant Secretary.

[FR Doc. 2022–00264 Filed 1–10–22; 8:45 am]

BILLING CODE 8011–01–P

[9] 15 U.S.C. 78f(b).

[10] 15 U.S.C. 78f(b)(4) & (5).

[11] 15 U.S.C. 78s(b)(3)(A).

[12] 17 CFR 240.19b–4(f)(2).

[13] 15 U.S.C. 78s(b)(2)(B).

[14] 17 CFR 200.30–3(a)(12).

SECURITIES AND EXCHANGE COMMISSION

[SEC File No. 270–034, OMB Control No. 3235–0034]

Submission for OMB Review; Comment Request; Extension: Rule 17f–2(a)

Upon Written Request, Copies Available From: Securities and Exchange

Commission, Office of FOIA Services, 100 F Street NE, Washington, DC 20549–2736

Notice is hereby given that pursuant to the Paperwork Reduction Act of 1995 (44 U.S.C. 3501 *et seq.*) (''PRA''), the Securities and Exchange Commission (''Commission'') has submitted to the Office of Management and Budget (''OMB'') a request for approval of extension of the previously approved collection of information provided for in Rule 17f–2(a) (17 CFR 240.17f–2(a)), under the Securities Exchange Act of 1934 (15 U.S.C. 78a *et seq.*).

Rule 17f–2(a) (Fingerprinting Requirements for Securities Professionals) requires that securities professionals be fingerprinted. This requirement serves to identify security-risk personnel, to allow an employer to make fully informed employment decisions, and to deter possible wrongdoers from seeking employment in the securities industry. Partners, directors, officers, and employees of exchanges, brokers, dealers, transfer agents, and clearing agencies are included.

The Commission staff estimates that approximately 4,480 respondents will submit an aggregate total of 289,780 new fingerprint cards each year or approximately 65 fingerprint cards per year per registrant. The staff estimates that the average number of hours necessary to complete a fingerprint card is one-half hour. Thus, the total estimated annual burden is 144,890 hours for all respondents (289,780 times one-half hour). The average internal cost of compliance per hour is approximately $283. Therefore, the total estimated annual internal cost of compliance for all respondents is $41,003,870 (144,890 times $283).

This rule does not involve the collection of confidential information.

An agency may not conduct or sponsor, and a person is not required to respond to, a collection of information under the PRA unless it displays a currently valid OMB control number.

The public may view background documentation for this information collection at the following website: *www.reginfo.gov.* Find this particular information collection by selecting ''Currently under 30-day Review—Open for Public Comments'' or by using the search function. Written comments and recommendations for the proposed information collection should be sent within 30 days of publication of this notice to (i) *www.reginfo.gov/public/do/PRAMain* and (ii) David Bottom, Director/Chief Information Officer, Securities and Exchange Commission, c/o John R. Pezzullo, 100 F Street NE, Washington, DC 20549, or by sending an email to: *PRA_Mailbox@sec.gov.*

Dated: January 5, 2022.

J. Matthew DeLesDernier,

Assistant Secretary.

[FR Doc. 2022–00255 Filed 1–10–22; 8:45 am]

BILLING CODE 8011–01–P

SECURITIES AND EXCHANGE COMMISSION

[Release No. 34–93904; File No. SR–NYSE–2021–77]

Self-Regulatory Organizations; New York Stock Exchange LLC; Notice of Filing and Immediate Effectiveness of Proposed Rule Change To Amend Its Price List With Respect to a Regulatory Fee Related to the Central Registration Depository

January 5, 2022.

Pursuant to Section 19(b)(1) [1] of the Securities Exchange Act of 1934 (the ''Act'') [2] and Rule 19b–4 thereunder,[3] notice is hereby given that, on December 22, 2021, New York Stock Exchange LLC (''NYSE'' or the ''Exchange'') filed with the Securities and Exchange Commission (the ''Commission'') the proposed rule change as described in Items I, II, and III below, which Items have been prepared by the self-regulatory organization. The Commission is publishing this notice to solicit comments on the proposed rule change from interested persons.

I. Self-Regulatory Organization's Statement of the Terms of Substance of the Proposed Rule Change

The Exchange proposes to amend its Price List (the ''Price List'') with respect to a regulatory fee related to the Central Registration Depository (''CRD system''), which is collected by the Financial Industry Regulatory Authority, Inc. (''FINRA''). The Exchange proposes to implement the fee change on January 2, 2022. The proposed rule change is available on the Exchange's website at *www.nyse.com,* at the principal office of the Exchange, and at the Commission's Public Reference Room.

II. Self-Regulatory Organization's Statement of the Purpose of, and Statutory Basis for, the Proposed Rule Change

In its filing with the Commission, the self-regulatory organization included statements concerning the purpose of, and basis for, the proposed rule change and discussed any comments it received on the proposed rule change. The text of those statements may be examined at the places specified in Item IV below. The Exchange has prepared summaries, set forth in sections A, B, and C below, of the most significant parts of such statements.

A. Self-Regulatory Organization's Statement of the Purpose of, and the Statutory Basis for, the Proposed Rule Change

1. Purpose

The Exchange proposes to amend the Price List with respect to a regulatory fee collected by FINRA for use of the CRD system.[4] The Exchange proposes to implement the fee change on January 2, 2022.

FINRA collects and retains certain regulatory fees via the CRD system for the registration of associated persons of member organizations of the Exchange that are not FINRA members (''Non-FINRA Member Organizations'').[5] The CRD system fees are user-based, and there is no distinction in the cost incurred by FINRA if the user is a FINRA member or a Non-FINRA Member Organization.

FINRA recently amended one of the fees assessed for use of the CRD system.[6] Accordingly, the Exchange proposes to amend the Price List to mirror the fee assessed by FINRA, which will be implemented concurrently with the amended FINRA fee on January 2, 2022.[7] Specifically, the

---

[1] 15 U.S.C. 78s(b)(1).

[2] 15 U.S.C. 78a.

[3] 17 CFR 240.19b–4.

[4] The CRD system is the central licensing and registration system for the U.S. securities industry. The CRD system enables individuals and firms seeking registration with multiple states and self-regulatory organizations to do so by submitting a single form, fingerprint card, and a combined payment of fees to FINRA. Through the CRD system, FINRA maintains the qualification, employment, and disciplinary histories of registered associated persons of broker-dealers.

[5] The Exchange originally adopted fees for use of the CRD system in 2001 and amended those fees in 2013. *See* Securities Exchange Act Release Nos. 45112 (November 28, 2001), 66 FR 63086 (December 4, 2001) (SR–NYSE–2001–47); 68587 (January 4, 2013), 78 FR 2467 (January 11, 2013) (SR–NYSE–2012–77). While the Exchange lists these fees in its Price List, it does not collect or retain these fees.

[6] *See* Securities Exchange Act Release No. 90176 (October 14, 2020), 85 FR 66592 (October 20, 2020) (SR–FINRA–2020–032).

[7] The Exchange notes that it has only adopted the CRD system fees charged by FINRA to Non-FINRA Member Organizations when such fees are applicable. In this regard, certain FINRA CRD system fees and requirements are specific to FINRA members, but do not apply to NYSE-only member organizations. Non-FINRA Member Organizations have been charged CRD system fees since 2001. *See* note 5, *supra.* Member organizations that are also FINRA members are charged CRD system fees according to Section 4 of Schedule A to the FINRA By-Laws.

Exchange proposes to amend the Price List to modify the fee charged to Non-FINRA Member Organizations for each initial Form U4 filed for the registration of a representative or principal from $100 to $125.[8]

The Exchange notes that the proposed change is not otherwise intended to address any other issues surrounding regulatory fees, and the Exchange is not aware of any problems that member organizations would have in complying with the proposed change.

2. Statutory Basis

The Exchange believes that the proposed rule change is consistent with Section 6(b) of the Act,[9] in general, and furthers the objectives of Sections 6(b)(4) and 6(b)(5),[10] in particular, because it provides for the equitable allocation of reasonable dues, fees, and other charges among its members, issuers, and other persons using its facilities and does not unfairly discriminate between customers, issuers, brokers, or dealers.

The Exchange believes that the proposed fee change is reasonable because the fee will be identical to that adopted by FINRA as of January 2, 2022 for use of the CRD system to submit a Form U4. The costs of operating and improving the CRD system are similarly borne by FINRA when a Non-FINRA Member Organization uses the CRD system; accordingly, the fees collected for such use should, as proposed by the Exchange, mirror the fees assessed to FINRA members. In addition, as FINRA noted in amending its fees, it believes that its proposed pricing structure is reasonable and correlates fees with the components that drive its regulatory costs to the extent feasible.

The Exchange also believes that the proposed fee change provides for the equitable allocation of reasonable fees and other charges, and does not unfairly discriminate between customers, issuers, brokers, and dealers. The fee applies equally to all individuals and firms required to report information to the CRD system, and the proposed change will result in the same regulatory fee being charged to all member organizations required to report information to the CRD system and for services performed by FINRA regardless of whether such member organizations are FINRA members. Accordingly, the Exchange believes that the fee collected for such use should increase in lockstep with the fee adopted by FINRA as of January 2, 2022, as is proposed by the Exchange.

B. Self-Regulatory Organization's Statement on Burden on Competition

The Exchange does not believe that the proposed rule change will impose any burden on competition that is not necessary or appropriate in furtherance of the purposes of the Act. Specifically, the Exchange believes that the proposed change will reflect the fee that will be assessed by FINRA for Form U4 filings as of January 2, 2022 and will thus result in the same regulatory fees being charged to all member organizations required to report information to the CRD system and for services performed by FINRA, regardless of whether or not such member organizations are FINRA members.

C. Self-Regulatory Organization's Statement on Comments on the Proposed Rule Change Received From Members, Participants, or Others

No written comments were solicited or received with respect to the proposed rule change.

III. Date of Effectiveness of the Proposed Rule Change and Timing for Commission Action

The foregoing rule change is effective upon filing pursuant to Section 19(b)(3)(A)[11] of the Act and subparagraph (f)(2) of Rule 19b–4[12] thereunder, because it establishes a due, fee, or other charge imposed by the Exchange.

At any time within 60 days of the filing of such proposed rule change, the Commission summarily may temporarily suspend such rule change if it appears to the Commission that such action is necessary or appropriate in the public interest, for the protection of investors, or otherwise in furtherance of the purposes of the Act. If the Commission takes such action, the Commission shall institute proceedings under Section 19(b)(2)(B)[13] of the Act to determine whether the proposed rule change should be approved or disapproved.

IV. Solicitation of Comments

Interested persons are invited to submit written data, views, and arguments concerning the foregoing, including whether the proposed rule change is consistent with the Act. Comments may be submitted by any of the following methods:

Electronic Comments

- Use the Commission's internet comment form (*https://www.sec.gov/rules/sro.shtml*); or
- Send an email to *rule-comments@sec.gov.* Please include File Number SR–NYSE–2021–77 on the subject line.

Paper Comments

- Send paper comments in triplicate to: Secretary, Securities and Exchange Commission, 100 F Street NE, Washington, DC 20549–1090.

All submissions should refer to File Number SR–NYSE–2021–77. This file number should be included on the subject line if email is used. To help the Commission process and review your comments more efficiently, please use only one method. The Commission will post all comments on the Commission's internet website (*https://www.sec.gov/rules/sro.shtml*). Copies of the submission, all subsequent amendments, all written statements with respect to the proposed rule change that are filed with the Commission, and all written communications relating to the proposed rule change between the Commission and any person, other than those that may be withheld from the public in accordance with the provisions of 5 U.S.C. 552, will be available for website viewing and printing in the Commission's Public Reference Room, 100 F Street NE, Washington, DC 20549 on official business days between the hours of 10:00 a.m. and 3:00 p.m. Copies of the filing also will be available for inspection and copying at the principal office of the Exchange. All comments received will be posted without change. Persons submitting comments are cautioned that we do not redact or edit personal identifying information from comment submissions. You should submit only information that you wish to make available publicly. All submissions should refer to File Number SR–NYSE–2021–77 and should be submitted on or before February 1, 2022.

For the Commission, by the Division of Trading and Markets, pursuant to delegated authority.[14]

J. Matthew DeLesDernier,

Assistant Secretary.

[FR Doc. 2022–00266 Filed 1–10–22; 8:45 am]

BILLING CODE 8011–01–P

[8] *See* Section 4(b)(1) of Schedule A to the FINRA By-Laws effective on January 2, 2022. This fee is assessed when a Non-FINRA Member Organization submits an initial Uniform Application for Securities Industry Regulation or Transfer (known as a ''Form U4'') filed by a member in the CRD system to register an individual.

[9] 15 U.S.C. 78f(b).

[10] 15 U.S.C. 78f(b)(4) & (5).

[11] 15 U.S.C. 78s(b)(3)(A).

[12] 17 CFR 240.19b–4(f)(2).

[13] 15 U.S.C. 78s(b)(2)(B).

[14] 17 CFR 200.30–3(a)(12).

SECURITIES AND EXCHANGE COMMISSION

[SEC File No. 270–442, OMB Control No. 3235–0498]

Submission for OMB Review; Comment Request; Extension: Rule 17a–12/Form X–17A–5 Part II

Upon Written Request, Copies Available From: Securities and Exchange Commission, Office of FOIA Services, 100 F Street NE, Washington, DC 20549–2736

Notice is hereby given that pursuant to the Paperwork Reduction Act of 1995 (''PRA'') (44 U.S.C. 3501 *et seq.*), the Securities and Exchange Commission (''Commission'') has submitted to the Office of Management and Budget (''OMB'') a request for approval of extension of the previously approved collection of information provided for in Rule 17a–12 (17 CFR 240.17a–12) and Part II of Form X–17A–5 (17 CFR 249.617) under the Securities Exchange Act of 1934 (15 U.S.C. 78a *et seq.*).

Rule 17a–12 is the reporting rule tailored specifically for over-the-counter (''OTC'') derivatives dealers registered with the Commission, and Part II of Form X–17A–5, the Financial and Operational Combined Uniform Single (''FOCUS'') Report, is the basic document for reporting the financial and operational condition of OTC derivatives dealers. Rule 17a–12 requires registered OTC derivatives dealers to file Part II of the FOCUS Report quarterly. Rule 17a–12 also requires that OTC derivatives dealers file audited financial statements (''audited report'') annually.

The reports required under Rule 17a–12 provide the Commission with information used to monitor the operations of OTC derivatives dealers and to enforce their compliance with the Commission's rules. These reports also enable the Commission to review the business activities of OTC derivatives dealers and to anticipate, where possible, how these dealers may be affected by significant economic events.

There are currently five registered OTC derivatives dealers. The staff expects that three of those firms will register as Security-Based Swap Dealers within the next three years and therefore will no longer be subject to Rule 17a–12. Thus, only two OTC derivatives dealers will be subject to the requirements of Rule 17a–12. The staff estimates that the average amount of time necessary to prepare and file the quarterly reports required by the rule is eighty hours per OTC derivatives dealer[1] per year and that the average amount of time to prepare and file the annual audited report is 100 hours per OTC derivatives dealer per year, for a total reporting burden of 180 hours per OTC derivatives dealer annually. Thus the staff estimates that the total industry-wide time burden to comply with the requirements of Rule 17a–12 is 360 hours per year (180 × 2). The Commission estimates that the average annual cost burden per OTC derivatives dealer for an independent public accountant to examine the financial statements is approximately $46,300 per respondent. Thus, the total industry-wide annual cost burden is approximately $92,600 ($46,300 × 2).

The retention period for the recordkeeping requirement under Rule 17a–12 is not less than two years following the date the notice is submitted. The recordkeeping requirement under this rule is mandatory to assist the Commission in monitoring OTC derivatives dealers. This rule does not involve the collection of confidential information.

An agency may not conduct or sponsor, and a person is not required to respond to, a collection of information under the PRA unless it displays a currently valid OMB control number.

The public may view background documentation for this information collection at the following website: *www.reginfo.gov.* Find this particular information collection by selecting ''Currently under 30-day Review—Open for Public Comments'' or by using the search function. Written comments and recommendations for the proposed information collection should be sent within 30 days of publication of this notice to (i) *www.reginfo.gov/public/do/PRAMain* and (ii) David Bottom, Director/Chief Information Officer, Securities and Exchange Commission, c/o John R. Pezzullo, 100 F Street NE, Washington, DC 20549, or by sending an email to: *PRA_Mailbox@sec.gov.*

Dated: January 5, 2022.

J. Matthew DeLesDernier,

Assistant Secretary.

[FR Doc. 2022–00252 Filed 1–10–22; 8:45 am]

BILLING CODE 8011–01–P

[1] Based upon an average of 4 responses per year and an average of 20 hours spent preparing each response.

SECURITIES AND EXCHANGE COMMISSION

[SEC File No. 270–264, OMB Control No. 3235–0341]

Submission for OMB Review; Comment Request

Upon Written Request, Copies Available From: Securities and Exchange Commission, Office of FOIA Services, 100 F Street NE, Washington, DC 20549–2736

Extension:
Rule 17Ad–4(b) & (c)

Notice is hereby given that pursuant to the Paperwork Reduction Act of 1995 (44 U.S.C. 3501 *et seq.*), the Securities and Exchange Commission (''Commission'') has submitted to the Office of Management and Budget (''OMB'') a request for approval of extension of the previously approved collection of information provided for in Rule 17Ad–4(b) & (c) under the Securities Exchange Act of 1934 (15 U.S.C. 78a *et seq.*).

Rule 17Ad–4(b) & (c) (17 CFR 240.17Ad–4) is used to document when transfer agents are exempt, or no longer exempt, from the minimum performance standards and certain recordkeeping provisions of the Commission's transfer agent rules. Pursuant to Rule 17Ad–4(b), if the Commission or the Office of the Comptroller of the Currency (''OCC'') is the appropriate regulatory agency (''ARA'') for an exempt transfer agent, that transfer agent is required to prepare and maintain in its possession a notice certifying that it is exempt from certain performance standards and recordkeeping and record retention provisions of the Commission's transfer agent rules. This notice need not be filed with the Commission or OCC. If the Board of Governors of the Federal Reserve System (''Fed'') or the Federal Deposit Insurance Corporation (''FDIC'') is the transfer agent's ARA, that transfer agent must prepare a notice and file it with the Fed or FDIC.

Rule 17Ad–4(c) sets forth the conditions under which a registered transfer agent loses its exempt status. Once the conditions for exemption no longer exist, the transfer agent, to keep the appropriate ARA apprised of its current status, must prepare, and file if the ARA for the transfer agent is the Fed or the FDIC, a notice of loss of exempt status under paragraph (c). The transfer agent then cannot claim exempt status under Rule 17Ad–4(b) again until it remains subject to the minimum performance standards for non-exempt

transfer agents for six consecutive months.

ARAs use the information contained in the notices required by Rules 17Ad–4(b) and 17Ad–4(c) to determine whether a registered transfer agent qualifies for the exemption, to determine when a registered transfer agent no longer qualifies for the exemption, and to determine the extent to which that transfer agent is subject to regulation.

The Commission estimates that approximately 10 registered transfer agents each year prepare or file notices in compliance with Rules 17Ad–4(b) and 17Ad–4(c). The Commission estimates that each such registered transfer agent spends approximately 1.5 hours to prepare or file such notices for an aggregate total annual burden of 15 hours (1.5 hours times 10 transfer agents). The Commission staff estimates that compliance staff work at registered transfer agents results in an internal cost of compliance, at an estimated hourly wage of $283, of $424.5 per year per transfer agent (1.5 hours × $283 per hour = $424.5 per year). Therefore, the aggregate annual internal cost of compliance for the approximate 10 transfer agents annually preparing or filing notices pursuant to Rules 17Ad–4(b) and 17Ad–4(c) is approximately $4,245 ($424.5 × 10 = $4,245).

This rule does not involve the collection of confidential information.

An agency may not conduct or sponsor, and a person is not required to respond to, a collection of information under the PRA unless it displays a currently valid OMB control number.

The public may view background documentation for this information collection at the following website: *www.reginfo.gov.* Find this particular information collection by selecting ''Currently under 30-day Review—Open for Public Comments'' or by using the search function. Written comments and recommendations for the proposed information collection should be sent within 30 days of publication of this notice to (i) *www.reginfo.gov/public/do/PRAMain* and (ii) David Bottom, Director/Chief Information Officer, Securities and Exchange Commission, c/o John R. Pezzullo, 100 F Street NE, Washington, DC 20549, or by sending an email to: *PRA_Mailbox@sec.gov.*

Dated: January 5, 2022.

J. Matthew DeLesDernier,

Assistant Secretary.

[FR Doc. 2022–00256 Filed 1–10–22; 8:45 am]

BILLING CODE 8011–01–P

SECURITIES AND EXCHANGE COMMISSION

[Release No. 34–93903; File No. SR–NYSENAT–2021–24]

Self-Regulatory Organizations; NYSE National, Inc.; Notice of Filing and Immediate Effectiveness of Proposed Rule Change To Amend Its Schedule of Fees and Rebates With Respect to a Regulatory Fee Related to the Central Registration Depository

January 5, 2022.

Pursuant to Section 19(b)(1) [1] of the Securities Exchange Act of 1934 (the ''Act'') [2] and Rule 19b–4 thereunder,[3] notice is hereby given that, on December 22, 2021, NYSE National, Inc. (''NYSE National'' or the ''Exchange'') filed with the Securities and Exchange Commission (the ''Commission'') the proposed rule change as described in Items I, II, and III below, which Items have been prepared by the self-regulatory organization. The Commission is publishing this notice to solicit comments on the proposed rule change from interested persons.

I. Self-Regulatory Organization's Statement of the Terms of Substance of the Proposed Rule Change

The Exchange proposes to amend its Schedule of Fees and Rebates (the ''Fee Schedule'') with respect to a regulatory fee related to the Central Registration Depository (''CRD system''), which is collected by the Financial Industry Regulatory Authority, Inc. (''FINRA''). The Exchange proposes to implement the fee change on January 2, 2022. The proposed rule change is available on the Exchange's website at *www.nyse.com,* at the principal office of the Exchange, and at the Commission's Public Reference Room.

II. Self-Regulatory Organization's Statement of the Purpose of, and Statutory Basis for, the Proposed Rule Change

In its filing with the Commission, the self-regulatory organization included statements concerning the purpose of, and basis for, the proposed rule change and discussed any comments it received on the proposed rule change. The text of those statements may be examined at the places specified in Item IV below. The Exchange has prepared summaries, set forth in sections A, B, and C below, of the most significant parts of such statements.

[1] 15 U.S.C. 78s(b)(1).

[2] 15 U.S.C. 78a.

[3] 17 CFR 240.19b–4.

A. Self-Regulatory Organization's Statement of the Purpose of, and the Statutory Basis for, the Proposed Rule Change

1. Purpose

The Exchange proposes to amend the Price List with respect to a regulatory fee collected by FINRA for use of the CRD system.[4] The Exchange proposes to implement the fee change on January 2, 2022.

FINRA collects and retains certain regulatory fees via the CRD system for the registration of associated persons of ETP Holders that are not FINRA members (''Non-FINRA ETP Holders'').[5] The CRD system fees are user-based, and there is no distinction in the cost incurred by FINRA if the user is a FINRA member or a Non-FINRA ETP Holder.

FINRA recently amended one of the fees assessed for use of the CRD system.[6] Accordingly, the Exchange proposes to amend the Price List to mirror the fee assessed by FINRA, which will be implemented concurrently with the amended FINRA fee on January 2, 2022.[7] Specifically, the Exchange proposes to amend the Price List to modify the fee charged to Non-FINRA ETP Holders for each initial Form U4 filed for the registration of a representative or principal from $100 to $125.[8]

The Exchange notes that the proposed change is not otherwise intended to

[4] The CRD system is the central licensing and registration system for the U.S. securities industry. The CRD system enables individuals and firms seeking registration with multiple states and self-regulatory organizations to do so by submitting a single form, fingerprint card, and a combined payment of fees to FINRA. Through the CRD system, FINRA maintains the qualification, employment, and disciplinary histories of registered associated persons of broker-dealers.

[5] The Exchange originally adopted fees for use of the CRD system in 2018. *See* Securities Exchange Act Release No. 83867 (July 23, 2018), 83 FR 35696 (July 27, 2018) (SR–NYSENAT–2018–16). While the Exchange lists these fees in its Price List, it does not collect or retain these fees.

[6] *See* Securities Exchange Act Release No. 90176 (October 14, 2020), 85 FR 66592 (October 20, 2020) (SR–FINRA–2020–032).

[7] The Exchange notes that it has only adopted the CRD system fees charged by FINRA to Non-FINRA ETP Holders when such fees are applicable. In this regard, certain FINRA CRD system fees and requirements are specific to FINRA members, but do not apply to NYSE American-only[sic] ETP Holders. Non-FINRA ETP Holders have been charged CRD system fees since 2018. *See* note 5, *supra.* ETP Holders that are also FINRA members are charged CRD system fees according to Section 4 of Schedule A to the FINRA By-Laws.

[8] *See* Section 4(b)(1) of Schedule A to the FINRA By-Laws effective on January 2, 2022. This fee is assessed when a Non-FINRA ETP Holder submits an initial Uniform Application for Securities Industry Regulation or Transfer (known as a ''Form U4'') filed by a member in the CRD system to register an individual.

address any other issues surrounding regulatory fees, and the Exchange is not aware of any problems that ETP Holders would have in complying with the proposed change.

2. Statutory Basis

The Exchange believes that the proposed rule change is consistent with Section 6(b) of the Act,[9] in general, and furthers the objectives of Sections 6(b)(4) and 6(b)(5),[10] in particular, because it provides for the equitable allocation of reasonable dues, fees, and other charges among its members, issuers, and other persons using its facilities and does not unfairly discriminate between customers, issuers, brokers, or dealers.

The Exchange believes that the proposed fee change is reasonable because the fee will be identical to that adopted by FINRA as of January 2, 2022 for use of the CRD system to submit a Form U4. The costs of operating and improving the CRD system are similarly borne by FINRA when a Non-FINRA ETP Holder uses the CRD system; accordingly, the fees collected for such use should, as proposed by the Exchange, mirror the fees assessed to FINRA members. In addition, as FINRA noted in amending its fees, it believes that its proposed pricing structure is reasonable and correlates fees with the components that drive its regulatory costs to the extent feasible.

The Exchange also believes that the proposed fee change provides for the equitable allocation of reasonable fees and other charges, and does not unfairly discriminate between customers, issuers, brokers, and dealers. The fee applies equally to all individuals and firms required to report information to the CRD system, and the proposed change will result in the same regulatory fee being charged to all ETP Holders required to report information to the CRD system and for services performed by FINRA regardless of whether such ETP Holders are FINRA members. Accordingly, the Exchange believes that the fee collected for such use should increase in lockstep with the fee adopted by FINRA as of January 2, 2022, as is proposed by the Exchange.

B. Self-Regulatory Organization's Statement on Burden on Competition

The Exchange does not believe that the proposed rule change will impose any burden on competition that is not necessary or appropriate in furtherance of the purposes of the Act. Specifically, the Exchange believes that the proposed change will reflect the fee that will be assessed by FINRA for Form U4 filings as of January 2, 2022 and will thus result in the same regulatory fees being charged to all ETP Holders required to report information to the CRD system and for services performed by FINRA, regardless of whether or not such ETP Holders are FINRA members.

C. Self-Regulatory Organization's Statement on Comments on the Proposed Rule Change Received From Members, Participants, or Others

No written comments were solicited or received with respect to the proposed rule change.

III. Date of Effectiveness of the Proposed Rule Change and Timing for Commission Action

The foregoing rule change is effective upon filing pursuant to Section 19(b)(3)(A) [11] of the Act and subparagraph (f)(2) of Rule 19b–4 [12] thereunder, because it establishes a due, fee, or other charge imposed by the Exchange.

At any time within 60 days of the filing of such proposed rule change, the Commission summarily may temporarily suspend such rule change if it appears to the Commission that such action is necessary or appropriate in the public interest, for the protection of investors, or otherwise in furtherance of the purposes of the Act. If the Commission takes such action, the Commission shall institute proceedings under Section 19(b)(2)(B) [13] of the Act to determine whether the proposed rule change should be approved or disapproved.

IV. Solicitation of Comments

Interested persons are invited to submit written data, views, and arguments concerning the foregoing, including whether the proposed rule change is consistent with the Act. Comments may be submitted by any of the following methods:

Electronic Comments

- Use the Commission's internet comment form (*http://www.sec.gov/rules/sro.shtml*); or
- Send an email to *rule-comments@sec.gov.* Please include File Number SR–NYSENAT–2021–24 on the subject line.

Paper Comments

- Send paper comments in triplicate to: Secretary, Securities and Exchange Commission, 100 F Street NE, Washington, DC 20549–1090.

All submissions should refer to File Number SR–NYSENAT–2021–24. This file number should be included on the subject line if email is used. To help the Commission process and review your comments more efficiently, please use only one method. The Commission will post all comments on the Commission's internet website (*http://www.sec.gov/rules/sro.shtml*). Copies of the submission, all subsequent amendments, all written statements with respect to the proposed rule change that are filed with the Commission, and all written communications relating to the proposed rule change between the Commission and any person, other than those that may be withheld from the public in accordance with the provisions of 5 U.S.C. 552, will be available for website viewing and printing in the Commission's Public Reference Room, 100 F Street NE, Washington, DC 20549 on official business days between the hours of 10:00 a.m. and 3:00 p.m. Copies of the filing also will be available for inspection and copying at the principal office of the Exchange. All comments received will be posted without change; the Commission does not edit personal identifying information from submissions. Persons submitting comments are cautioned that we do not redact or edit personal identifying information from comment submissions. You should submit only information that you wish to make available publicly. All submissions should refer to File Number SR–NYSENAT–2021–24 and should be submitted on or before February 1, 2022.

For the Commission, by the Division of Trading and Markets, pursuant to delegated authority.[14]

J. Matthew DeLesDernier,

Assistant Secretary.

[FR Doc. 2022–00265 Filed 1–10–22; 8:45 am]

BILLING CODE 8011–01–P

[9] 15 U.S.C. 78s(b)(1).

[10] 15 U.S.C. 78f(b)(4) & (5).

[11] 15 U.S.C. 78s(b)(3)(A).

[12] 17 CFR 240.19b–4(f)(2).

[13] 17 CFR 200.30–3(a)(12).

[14] 17 CFR 200.30–3(a)(12).

SECURITIES AND EXCHANGE COMMISSION

[Release No. 34–93907; File No. SR–NYSECHX–2021–18]

Self-Regulatory Organizations; NYSE Chicago, Inc.; Notice of Filing and Immediate Effectiveness of Proposed Rule Change To Amend Its Schedule of Fees and Rebates With Respect to a Regulatory Fee Related to the Central Registration Depository

January 5, 2022.

Pursuant to Section 19(b)(1) [1] of the Securities Exchange Act of 1934 (the ''Act'') [2] and Rule 19b-4 thereunder,[3] notice is hereby given that, on December 22, 2021 the NYSE Chicago, Inc. (''NYSE Chicago'' or the ''Exchange'') filed with the Securities and Exchange Commission (the ''Commission'') the proposed rule change as described in Items I, II, and III below, which Items have been prepared by the self-regulatory organization. The Commission is publishing this notice to solicit comments on the proposed rule change from interested persons.

I. Self-Regulatory Organization's Statement of the Terms of Substance of the Proposed Rule Change

The Exchange proposes to amend its Schedule of Fees and Rebates (the ''Fee Schedule'') with respect to a regulatory fee related to the Central Registration Depository (''CRD system''), which is collected by the Financial Industry Regulatory Authority, Inc. (''FINRA''). The Exchange proposes to implement the fee change on January 2, 2022. The proposed rule change is available on the Exchange's website at *www.nyse.com,* at the principal office of the Exchange, and at the Commission's Public Reference Room.

II. Self-Regulatory Organization's Statement of the Purpose of, and Statutory Basis for, the Proposed Rule Change

In its filing with the Commission, the self-regulatory organization included statements concerning the purpose of, and basis for, the proposed rule change and discussed any comments it received on the proposed rule change. The text of those statements may be examined at the places specified in Item IV below. The Exchange has prepared summaries, set forth in sections A, B, and C below, of the most significant parts of such statements.

[1] 15 U.S.C. 78s(b)(1).

[2] 15 U.S.C. 78a.

[3] 17 CFR 240.19b–4.

A. Self-Regulatory Organization's Statement of the Purpose of, and the Statutory Basis for, the Proposed Rule Change

1. Purpose

The Exchange proposes to amend the Price List with respect to a regulatory fee collected by FINRA for use of the CRD system.[4] The Exchange proposes to implement the fee change on January 2, 2022.

FINRA collects and retains certain regulatory fees via the CRD system for the registration of associated persons of Participants that are not FINRA members (''Non-FINRA Participants'').[5] The CRD system fees are user-based, and there is no distinction in the cost incurred by FINRA if the user is a FINRA member or a Non-FINRA Participant.

FINRA recently amended one of the fees assessed for use of the CRD system.[6] Accordingly, the Exchange proposes to amend the Price List to mirror the fee assessed by FINRA, which will be implemented concurrently with the amended FINRA fee on January 2, 2022.[7] Specifically, the Exchange proposes to amend the Price List to modify the fee charged to Non-FINRA Participants for each initial Form U4 filed for the registration of a representative or principal from $100 to $125.[8]

[4] The CRD system is the central licensing and registration system for the U.S. securities industry. The CRD system enables individuals and firms seeking registration with multiple states and self-regulatory organizations to do so by submitting a single form, fingerprint card, and a combined payment of fees to FINRA. Through the CRD system, FINRA maintains the qualification, employment, and disciplinary histories of registered associated persons of broker-dealers.

[5] The Exchange originally adopted fees for use of the CRD system in 2008 and amended those fees in 2013. *See* Securities Exchange Act Release Nos. 57587 (March 31, 2008), 73 FR 18598 (April 4, 2008) (SR–CHX–2007–21); 68647 (January 14, 2013), 78 FR 4506 (January 22, 2013) (SR–CHX–2013–01). While the Exchange lists these fees in its Price List, it does not collect or retain these fees.

[6] *See* Securities Exchange Act Release No. 90176 (October 14, 2020), 85 FR 66592 (October 20, 2020) (SR–FINRA–2020–032).

[7] The Exchange notes that it has only adopted the CRD system fees charged by FINRA to Non-FINRA Participants when such fees are applicable. In this regard, certain FINRA CRD system fees and requirements are specific to FINRA members, but do not apply to NYSE Chicago-only Participants. Non-FINRA Participants have been charged CRD system fees since 2008. *See* note 5, *supra.* Participants that are also FINRA members are charged CRD system fees according to Section 4 of Schedule A to the FINRA By-Laws.

[8] *See* Section 4(b)(1) of Schedule A to the FINRA By-Laws effective on January 2, 2022. This fee is assessed when a Non-FINRA Participant submits an initial Uniform Application for Securities Industry Regulation or Transfer (known as a ''Form U4'') filed by a member in the CRD system to register an individual.

The Exchange notes that the proposed change is not otherwise intended to address any other issues surrounding regulatory fees, and the Exchange is not aware of any problems that Participants would have in complying with the proposed change.

2. Statutory Basis

The Exchange believes that the proposed rule change is consistent with Section 6(b) of the Act,[9] in general, and furthers the objectives of Sections 6(b)(4) and 6(b)(5),[10] in particular, because it provides for the equitable allocation of reasonable dues, fees, and other charges among its members, issuers, and other persons using its facilities and does not unfairly discriminate between customers, issuers, brokers, or dealers.

The Exchange believes that the proposed fee change is reasonable because the fee will be identical to that adopted by FINRA as of January 2, 2022 for use of the CRD system to submit a Form U4. The costs of operating and improving the CRD system are similarly borne by FINRA when a Non-FINRA Participant uses the CRD system; accordingly, the fees collected for such use should, as proposed by the Exchange, mirror the fees assessed to FINRA members. In addition, as FINRA noted in amending its fees, it believes that its proposed pricing structure is reasonable and correlates fees with the components that drive its regulatory costs to the extent feasible.

The Exchange also believes that the proposed fee change provides for the equitable allocation of reasonable fees and other charges, and does not unfairly discriminate between customers, issuers, brokers, and dealers. The fee applies equally to all individuals and firms required to report information to the CRD system, and the proposed change will result in the same regulatory fee being charged to all Participants required to report information to the CRD system and for services performed by FINRA regardless of whether such Participants are FINRA members. Accordingly, the Exchange believes that the fee collected for such use should increase in lockstep with the fee adopted by FINRA as of January 2, 2022, as is proposed by the Exchange.

B. Self-Regulatory Organization's Statement on Burden on Competition

The Exchange does not believe that the proposed rule change will impose any burden on competition that is not necessary or appropriate in furtherance

[9] 15 U.S.C. 78f(b).

[10] 15 U.S.C. 78f(b)(4) & (5).

of the purposes of the Act. Specifically, the Exchange believes that the proposed change will reflect the fee that will be assessed by FINRA for Form U4 filings as of January 2, 2022 and will thus result in the same regulatory fees being charged to all Participants required to report information to the CRD system and for services performed by FINRA, regardless of whether or not such Participants are FINRA members.

C. Self-Regulatory Organization's Statement on Comments on the Proposed Rule Change Received From Members, Participants, or Others

No written comments were solicited or received with respect to the proposed rule change.

III. Date of Effectiveness of the Proposed Rule Change and Timing for Commission Action

The foregoing rule change is effective upon filing pursuant to Section 19(b)(3)(A) [11] of the Act and subparagraph (f)(2) of Rule 19b–4 [12] thereunder, because it establishes a due, fee, or other charge imposed by the Exchange.

At any time within 60 days of the filing of such proposed rule change, the Commission summarily may temporarily suspend such rule change if it appears to the Commission that such action is necessary or appropriate in the public interest, for the protection of investors, or otherwise in furtherance of the purposes of the Act. If the Commission takes such action, the Commission shall institute proceedings under Section 19(b)(2)(B) [13] of the Act to determine whether the proposed rule change should be approved or disapproved.

IV. Solicitation of Comments

Interested persons are invited to submit written data, views, and arguments concerning the foregoing, including whether the proposed rule change is consistent with the Act. Comments may be submitted by any of the following methods:

Electronic Comments

- Use the Commission's internet comment form (*http://www.sec.gov/rules/sro.shtml*); or
- Send an email to *rule-comments@sec.gov.* Please include File Number SR–NYSECHX–2021–18 on the subject line.

Paper Comments

- Send paper comments in triplicate to: Secretary, Securities and Exchange Commission, 100 F Street NE, Washington, DC 20549–1090.

All submissions should refer to File Number SR–NYSECHX–2021–18. This file number should be included on the subject line if email is used. To help the Commission process and review your comments more efficiently, please use only one method. The Commission will post all comments on the Commission's internet website (*http://www.sec.gov/rules/sro.shtml*). Copies of the submission, all subsequent amendments, all written statements with respect to the proposed rule change that are filed with the Commission, and all written communications relating to the proposed rule change between the Commission and any person, other than those that may be withheld from the public in accordance with the provisions of 5 U.S.C. 552, will be available for website viewing and printing in the Commission's Public Reference Room, 100 F Street NE, Washington, DC 20549 on official business days between the hours of 10:00 a.m. and 3:00 p.m. Copies of the filing also will be available for inspection and copying at the principal office of the Exchange. All comments received will be posted without change. Persons submitting comments are cautioned that we do not redact or edit personal identifying information from comment submissions. You should submit only information that you wish to make available publicly. All submissions should refer to File Number SR–NYSECHX–2021–18 and should be submitted on or before February 1, 2022.

For the Commission, by the Division of Trading and Markets, pursuant to delegated authority.[14]

J. Matthew DeLesDernier,

Assistant Secretary.

[FR Doc. 2022–00268 Filed 1–10–22; 8:45 am]

BILLING CODE 8011–01–P

[11] 15 U.S.C. 78s(b)(3)(A).

[12] 17 CFR 240.19b–4(f)(2).

[13] 15 U.S.C. 78s(b)(2)(B).

[14] 17 CFR 200.30–3(a)(12).

SECURITIES AND EXCHANGE COMMISSION

[SEC File No. 270–517, OMB Control No. 3235–0575]

Submission for OMB Review; Comment Request

Upon Written Request, Copies Available From: Securities and Exchange Commission, Office of FOIA Services, 100 F Street NE, Washington, DC 20549–2736

Extension:

Regulation AC

Notice is hereby given that pursuant to the Paperwork Reduction Act of 1995 (''PRA'') (44 U.S.C. 3501 *et seq.*), the Securities and Exchange Commission (''Commission'') has submitted to the Office of Management and Budget (''OMB'') a request for approval of extension of the previously approved collection of information provided for in Regulation Analyst Certification (''Regulation AC'') (17 CFR 242.500–505), under the Securities Exchange Act of 1934 (15 U.S.C. 78a *et seq.*).

Regulation AC requires that research reports published, circulated, or provided by a broker or dealer or covered person contain a statement attesting that the views expressed in each research report accurately reflect the analyst's personal views and whether or not the research analyst received or will receive any compensation in connection with the views or recommendations expressed in the research report. Regulation AC also requires broker-dealers to, on a quarterly basis, make, keep, and maintain records of research analyst statements regarding whether the views expressed in public appearances accurately reflected the analyst's personal views, and whether any part of the analyst's compensation is related to the specific recommendations or views expressed in the public appearance. Regulation AC also requires that research prepared by foreign persons be presented to U.S. persons pursuant to Securities Exchange Act Rule 15a–6 and that broker-dealers notify associated persons if they would be covered by the regulation. Regulation AC excludes the news media from its coverage.

The collections of information under Regulation AC are necessary to provide investors with information with which to determine the value of the research available to them. It is important for an investor to know whether an analyst may be biased with respect to securities or issuers that are the subject of a research report. Further, in evaluating a research report, it is reasonable for an investor to want to know about an analyst's compensation. Without the information collection, the purposes of Regulation AC could not be met. This regulation does not involve the collection of confidential information.

The Commission estimates that Regulation AC imposes an aggregate annual time burden of approximately 40,806 hours. The Commission estimates that the total annual internal cost of compliance for the 40,806 hours is approximately $20,923,582.

An agency may not conduct or sponsor, and a person is not required to respond to, a collection of information under the PRA unless it displays a currently valid OMB control number.

The public may view background documentation for this information collection at the following website: *www.reginfo.gov.* Find this particular information collection by selecting ''Currently under 30-day Review—Open for Public Comments'' or by using the search function. Written comments and recommendations for the proposed information collection should be sent within 30 days of publication of this notice to (i) *www.reginfo.gov/public/do/PRAMain* and (ii) David Bottom, Director/Chief Information Officer, Securities and Exchange Commission, c/o John R. Pezzullo, 100 F Street NE, Washington, DC 20549, or by sending an email to: *PRA_Mailbox@sec.gov.*

Dated: January 5, 2022.

J. Matthew DeLesDernier,

Assistant Secretary.

[FR Doc. 2022–00251 Filed 1–10–22; 8:45 am]

BILLING CODE 8011–01–P

DEPARTMENT OF STATE

[Public Notice: 11621]

Notice of Determinations; Culturally Significant Objects Being Imported for Exhibition—Determinations: ''Meret Oppenheim: My Exhibition'' Exhibition

SUMMARY: Notice is hereby given of the following determinations: I hereby determine that certain objects being imported from abroad pursuant to agreements with their foreign owners or custodians for temporary display in the exhibition ''Meret Oppenheim: My Exhibition'' at the Menil Collection, Houston, Texas; the Museum of Modern Art, New York, New York; and at possible additional exhibitions or venues yet to be determined, are of cultural significance, and, further, that their temporary exhibition or display within the United States as aforementioned is in the national interest. I have ordered that Public Notice of these determinations be published in the **Federal Register**.

FOR FURTHER INFORMATION CONTACT: Chi D. Tran, Program Administrator, Office of the Legal Adviser, U.S. Department of State (telephone: 202–632–6471; email: *section2459@state.gov*). The mailing address is U.S. Department of State, L/PD, 2200 C Street NW (SA–5), Suite 5H03, Washington, DC 20522–0505.

SUPPLEMENTARY INFORMATION: The foregoing determinations were made pursuant to the authority vested in me by the Act of October 19, 1965 (79 Stat. 985; 22 U.S.C. 2459), E.O. 12047 of March 27, 1978, the Foreign Affairs Reform and Restructuring Act of 1998 (112 Stat. 2681, *et seq.;* 22 U.S.C. 6501 note, *et seq.*), Delegation of Authority No. 234 of October 1, 1999, Delegation of Authority No. 236–3 of August 28, 2000, and Delegation of Authority No. 523 of December 22, 2021.

Stacy E. White,

Deputy Assistant Secretary for Professional and Cultural Exchanges, Bureau of Educational and Cultural Affairs, Department of State.

[FR Doc. 2022–00272 Filed 1–10–22; 8:45 am]

BILLING CODE 4710–05–P

SUSQUEHANNA RIVER BASIN COMMISSION

Grandfathering (GF) Registration Notice

AGENCY: Susquehanna River Basin Commission.

ACTION: Notice.

SUMMARY: This notice lists Grandfathering Registration for projects by the Susquehanna River Basin Commission during the period set forth in **DATES**.

DATES: December 1–31, 2021.

ADDRESSES: Susquehanna River Basin Commission, 4423 North Front Street, Harrisburg, PA 17110–1788.

FOR FURTHER INFORMATION CONTACT: Jason E. Oyler, General Counsel and Secretary to the Commission, telephone: (717) 238–0423, ext. 1312; fax: (717) 238–2436; email: *joyler@srbc.net.* Regular mail inquiries May be sent to the above address.

SUPPLEMENTARY INFORMATION: This notice lists GF Registration for projects, described below, pursuant to 18 CFR 806, subpart E for the time period specified above:

Grandfathering Registration Under 18 CFR Part 806, Subpart E

1. Elkview Country Club, GF Certificate No. GF–202112196, Greenfield and Fell Townships, Lackawanna County, Pa.; Crystal Lake; Issue Date: December 17, 2021.
2. Big Heart Pet Brands, Inc., GF Certificate No. GF–202112197, South Centre Township, Columbia County, Pa.; Well 3; Issue Date: December 29, 2021.
3. Huntingdon Borough—Public Water Supply System, GF Certificate No. GF–202112198, Huntingdon Borough, Huntingdon County, Pa.; Standing Stone Creek; Issue Date: December 29, 2021.
4. Kunzler & Company, Inc.—Tyrone Facility, GF Certificate No. GF–202112199, Snyder Township, Blair County, Pa.; consumptive use; Issue Date: December 29, 2021.
5. Pennsylvania Fish & Boat Commission—Cooperative Hatcheries and Nurseries, GF Certificate No. GF–202112200, various municipalities and counties, Pa.; see Addendum; Issue Date: December 29, 2021.
6. Pioneer Hi-Bred International, Inc., GF Certificate No. GF–202112201, East Earl Township, Lancaster County, Pa.; Pequea Creek; Issue Date: December 29, 2021.

Authority: Public Law 91–575, 84 Stat. 1509 *et seq.,* 18 CFR parts 806, 807, and 808.

Dated: January 6, 2022.

Jason E. Oyler

General Counsel and Secretary to the Commission.

[FR Doc. 2022–00318 Filed 1–10–22; 8:45 am]

BILLING CODE 7040–01–P

SUSQUEHANNA RIVER BASIN COMMISSION

Projects Approved for Minor Modifications

AGENCY: Susquehanna River Basin Commission.

ACTION: Notice.

SUMMARY: This notice lists the minor modifications approved for a previously approved project by the Susquehanna River Basin Commission during the period set forth in **DATES**.

DATES: December 1–31, 2021.

ADDRESSES: Susquehanna River Basin Commission, 4423 North Front Street, Harrisburg, PA 17110–1788.

FOR FURTHER INFORMATION CONTACT: Jason E. Oyler, General Counsel, telephone: (717) 238–0423, ext. 1312; fax: (717) 238–2436; email: *joyler@srbc.net.* Regular mail inquiries may be sent to the above address.

SUPPLEMENTARY INFORMATION: This notice lists previously approved projects, receiving approval of minor modifications, described below, pursuant to 18 CFR 806.18 or to Commission Resolution Nos. 2013–11 and 2015–06 for the time period specified above:

Minor Modification Issued Under 18 CFR 806.18

1. Seneca Resources Company, LLC, Docket No. 20210611, Sergeant and Norwich Townships, McKean County,

Pa.; approval authorizing the additional water use purpose for hydrostatic testing; Approval Date: August 18, 2021.

Authority: Public Law 91–575, 84 Stat. 1509 *et seq.,* 18 CFR parts 806, 807, and 808.

Dated: January 6, 2022.

Jason E. Oyler,

General Counsel and Secretary to the Commission.

[FR Doc. 2022–00316 Filed 1–10–22; 8:45 am]

BILLING CODE 7040–01–P

SUSQUEHANNA RIVER BASIN COMMISSION

Public Hearing

AGENCY: Susquehanna River Basin Commission.

ACTION: Notice.

SUMMARY: The Susquehanna River Basin Commission will hold a public hearing on February 3, 2022. The Commission will hold this hearing in-person and telephonically. At this public hearing, the Commission will hear testimony on the projects listed in the **SUPPLEMENTARY INFORMATION** section of this notice. Such projects and proposals are intended to be scheduled for Commission action at its next business meeting, tentatively scheduled for March 17, 2022, which will be noticed separately. The public should take note that this public hearing will be the only opportunity to offer oral comment to the Commission for the listed projects and proposals. The deadline for the submission of written comments is February 14, 2022.

DATES: The public hearing will convene on February 3, 2022, at 6:30 p.m. The public hearing will end at 9:00 p.m. or at the conclusion of public testimony, whichever is earlier. The deadline for the submission of written comments is Monday, February 14, 2022.

ADDRESSES: This public hearing will be conducted in-person and telephonically. You may attend in person at Susquehanna River Basin Commission, 4423 N Front St., Harrisburg, Pennsylvania or join by Conference Call #: 1–888–387–8686, Conference Room #: 917 968 6050.

FOR FURTHER INFORMATION CONTACT: Jason Oyler, General Counsel and Secretary to the Commission, telephone: (717) 238–0423 or *joyler@srbc.net.*

Information concerning the applications for the projects is available at the Commission's Water Application and Approval Viewer at *https://www.srbc.net/waav.* Information concerning the proposals can be found at *https://www.srbc.net/about/meetings-events/.* Additional supporting documents are available to inspect and copy in accordance with the Commission's Access to Records Policy at *www.srbc.net/regulatory/policies-guidance/docs/access-to-records-policy-2009-02.pdf.*

SUPPLEMENTARY INFORMATION: The public hearing will cover the following projects:

Projects Scheduled for Action

1. *Project Sponsor and Facility:* Artesian Water Company, Inc., New Garden Township, Chester County, Pa. Application for renewal of the transfer of water of up to 3.000 mgd (30-day average) from the Chester Water Authority (Docket No. 19961105).

2. *Project Sponsor and Facility:* Columbia Water Company, West Hempfield Township, Lancaster County, Pa. Applications for groundwater withdrawals (30-day averages) of up to 0.474 mgd from Chickies Well 2 and 0.596 mgd from Chickies Well 3.

3. *Project Sponsor and Facility:* Commonwealth Environmental Systems L.P., Foster, Frailey and Reilly Townships, Schuylkill County, Pa. Application for renewal of consumptive use of up to 0.150 mgd (peak day) (Docket No. 20070304).

4. *Project Sponsor:* Compass Quarries, Inc. Project Facility: Allan Myers Materials—Paradise Quarry, Paradise Township, Lancaster County, Pa. Modification to increase consumptive use (peak day) by an additional 0.068 mgd, for a total consumptive use of up to 0.150 mgd (Docket No. 20040608).

5. *Project Sponsor:* Corning Incorporated. Project Facility: Sullivan Park, Town of Erwin, Steuben County, N.Y. Applications for renewal of groundwater withdrawals (30-day averages) of up to 0.800 mgd from Well 2 and 0.800 mgd from Well 3, and consumptive use of up to 0.350 mgd (peak day) (Docket No. 19970705).

6. *Project Sponsor and Facility:* Coterra Energy Inc. (Meshoppen Creek), Lemon Township, Wyoming County, Pa. Application for renewal of surface water withdrawal of up to 1.000 mgd (peak day) (Docket No. 20170302).

7. *Project Sponsor:* County of Lycoming. Project Facility: Lycoming County Resource Management Services, Brady Township, Lycoming County, Pa. Application for renewal of consumptive use of up to 0.099 mgd (30-day average) (Docket No. 20070302).

8. *Project Sponsor and Facility:* Deep Woods Lake LLC, Dennison Township, Luzerne County, Pa. Applications for groundwater withdrawal of up to 0.200 mgd (30-day average) from Well SW–5 and consumptive use of up to 0.467 mgd (peak day).

9. *Project Sponsor and Facility:* Eagles Mere Country Club, Eagles Mere Borough and Shrewsbury Township, Sullivan County, Pa. Application for renewal of consumptive use of up to 0.120 mgd (peak day) (Docket No. 19970302).

10. *Project Sponsor and Facility:* EQT ARO LLC (West Branch Susquehanna River), Nippenose Township, Lycoming County, Pa. Application for renewal of surface water withdrawal of up to 0.720 mgd (peak day) (Docket No. 20170301).

11. *Project Sponsor:* Farmers Pride, Inc. Project Facility: Bell & Evans Plant 3, Bethel Township, Lebanon County, Pa. Applications for groundwater withdrawals (30-day averages) of up to 0.108 mgd from Well PW–1, 0.139 mgd from Well PW–2, and 0.179 mgd from Well PW–4.

12. *Project Sponsor and Facility:* Geisinger Health System, Mahoning Township, Montour County, Pa. Applications for renewal of consumptive use of up to 0.499 mgd (peak day) and groundwater withdrawal of up to 0.075 mgd (30-day average) from Well 3, as well as recognizing, assessing, and regulating historical withdrawals from the Mine Shaft Well (Docket No. 19910103).

13. *Project Sponsor:* Hampden Township. Project Facility: Armitage Golf Club, Hampden Township, Cumberland County, Pa. Application for renewal of consumptive use of up to 0.290 mgd (peak day) (Docket No. 19920101).

14. *Project Sponsor and Facility:* Millersburg Area Authority, Upper Paxton Township, Dauphin County, Pa. Application for renewal of groundwater withdrawal of up to 0.117 mgd (30-day average) from Well 14 (Docket No. 19930301).

15. *Project Sponsor and Facility:* Municipal Authority of the Township of East Hempfield dba Hempfield Water Authority, East Hempfield Township, Lancaster County, Pa. Applications for renewal of groundwater withdrawals (30-day averages) of up to 0.353 mgd from Well 6, 0.145 mgd from Well 7, 1.447 mgd from Well 8, and 1.800 mgd from Well 11, and Commission-initiated modification to Docket No. 20120906, which approves withdrawals from Wells 1, 2, 3, 4, and 5 and Spring S–1 (Docket Nos. 19870306, 19890503, 19930101, and 20120906).

16. *Project Sponsor and Facility:* Repsol Oil & Gas USA, LLC (Sugar Creek), West Burlington Township, Bradford County, Pa. Application for renewal of surface water withdrawal of

up to 0.750 mgd (peak day) (Docket No. 20170308).

Project Scheduled for Action Involving a Diversion

17. *Project Sponsor and Facility:* Chester Water Authority, New Garden Township, Chester County, Pa. Applications for renewal of consumptive use and for an out-of-basin diversion of up to 3.000 mgd (30-day average) (Docket No. 19961104).

Opportunity To Appear and Comment

Interested parties may call into the hearing to offer comments to the Commission on any business listed above required to be the subject of a public hearing. Given the nature of the meeting, the Commission strongly encourages those members of the public wishing to provide oral comments to pre-register with the Commission by emailing Jason Oyler at *joyler@srbc.net* prior to the hearing date. The presiding officer reserves the right to limit oral statements in the interest of time and to otherwise control the course of the hearing. Access to the hearing via telephone will begin at 6:15 p.m. Guidelines for the public hearing are posted on the Commission's website, *www.srbc.net,* prior to the hearing for review. The presiding officer reserves the right to modify or supplement such guidelines at the hearing. Written comments on any business listed above required to be the subject of a public hearing may also be mailed to Mr. Jason Oyler, Secretary to the Commission, Susquehanna River Basin Commission, 4423 North Front Street, Harrisburg, Pa. 17110–1788, or submitted electronically through *https://www.srbc.net/regulatory/public-comment/.* Comments mailed or electronically submitted must be received by the Commission on or before February 14, 2021, to be considered.

Authority: Pub. L. 91–575, 84 Stat. 1509 *et seq.,* 18 CFR parts 806, 807, and 808.

Dated: January 6, 2022.

Jason E. Oyler,

General Counsel and Secretary to the Commission.

[FR Doc. 2022–00320 Filed 1–10–22; 8:45 am]

BILLING CODE 7040–01–P

SUSQUEHANNA RIVER BASIN COMMISSION

Projects Approved for Consumptive Uses of Water

AGENCY: Susquehanna River Basin Commission.

ACTION: Notice.

SUMMARY: This notice lists the projects approved by rule by the Susquehanna River Basin Commission during the period set forth in **DATES**.

DATES: December 1–31, 2021.

ADDRESSES: Susquehanna River Basin Commission, 4423 North Front Street, Harrisburg, PA 17110–1788.

FOR FURTHER INFORMATION CONTACT: Jason E. Oyler, General Counsel and Secretary to the Commission, telephone: (717) 238–0423, ext. 1312; fax: (717) 238–2436; email: *joyler@srbc.net.* Regular mail inquiries may be sent to the above address.

SUPPLEMENTARY INFORMATION: This notice lists the projects, described below, receiving approval for the consumptive use of water pursuant to the Commission's approval by rule process set forth in 18 CFR 806.22 (e) and 18 CFR 806.22 (f) for the time period specified above:

Water Source Approval—Issued Under 18 CFR 806.22(f)

1. Repsol Oil & Gas USA, LLC; Pad ID: SHAW (05–272) J; ABR–202112001; Rush Township, Susquehanna County; Pa.; Consumptive Use of Up to 6.0000 mgd; Approval Date: December 3, 2021.
2. Coterra Energy, Inc.; Pad ID: GrooverS P1; ABR–201412003.R1; Bridgewater Township, Susquehanna County, Pa.; Consumptive Use of Up to 5.0000 mgd; Approval Date: December 10, 2021.
3. SWN Production Company, LLC; Pad ID: HDK; ABR–201112001.R2; Franklin Township, Susquehanna County, Pa.; Consumptive Use of Up to 4.9990 mgd; Approval Date: December 10, 2021.
4. Seneca Resources Company, LLC; Pad ID: Oldroyd 509; ABR–20091218.R2; Rutland Township, Tioga County; Pa.; Consumptive Use of Up to 4.0000 mgd; Approval Date: December 16, 2021.
5. Seneca Resources Company, LLC; Pad ID: Starks 460; ABR–20091217.R2; Covington and Richmond Townships, Tioga County; Pa.; Consumptive Use of Up to 4.0000 mgd; Approval Date: December 16, 2021.
6. Seneca Resources Company, LLC; Pad ID: Houck 433; ABR–20091207.R2; Delmar and Shippen Townships, Tioga County; Pa.; Consumptive Use of Up to 4.0000 mgd; Approval Date: December 16, 2021.
7. Coterra Energy, Inc.; Pad ID: WrightW P1; ABR–201412005.R1; Bridgewater Township, Susquehanna County, Pa.; Consumptive Use of Up to 5.0000 mgd; Approval Date: December 16, 2021.
8. SWN Production Company, LLC; Pad ID: INNES; ABR–201111032.R2; New Milford Township, Susquehanna County, Pa.; Consumptive Use of Up to 4.9990 mgd; Approval Date: December 16, 2021.
9. SWN Production Company, LLC; Pad ID: SKELLY; ABR–201112005.R2; New Milford Township, Susquehanna County, Pa.; Consumptive Use of Up to 4.9990 mgd; Approval Date: December 16, 2021.
10. Seneca Resources Company, LLC; Pad ID: SGL 90 E Pad; ABR–201512008.R1; Lawrence Township, Clearfield County; Pa.; Consumptive Use of Up to 4.0000 mgd; Approval Date: December 22, 2021.
11. Coterra Energy, Inc.; Pad ID: StellitanoA P1; ABR–201412008.R1; Gibson Township, Susquehanna County, Pa.; Consumptive Use of Up to 5.0000 mgd; Approval Date: December 22, 2021.
12. Coterra Energy, Inc.; Pad ID: HibbardAM P1; ABR–20091223.R2; Dimock Township, Susquehanna County, Pa.; Consumptive Use of Up to 5.0000 mgd; Approval Date: December 22, 2021.
13. Coterra Energy, Inc.; Pad ID: HibbardAM P2; ABR–20091224.R2; Dimock Township, Susquehanna County, Pa.; Consumptive Use of Up to 5.0000 mgd; Approval Date: December 22, 2021.
14. SWN Production Company, LLC; Pad ID: HOWLAND–LENT; ABR–201112032.R2; Herrick Township, Bradford County, Pa.; Consumptive Use of Up to 4.9990 mgd; Approval Date: December 22, 2021.
15. Pennsylvania General Energy Company, L.L.C.; Pad ID: COP Tract 729 Pad B; ABR–201111015.R2; Cummings Township, Lycoming County; Pa.; Consumptive Use of Up to 3.5000 mgd; Approval Date: December 27, 2021.
16. Coterra Energy, Inc.; Pad ID: ZuppK P1; ABR–201112004.R2; Harford Township, Susquehanna County, Pa.; Consumptive Use of Up to 5.0000 mgd; Approval Date: December 27, 2021.
17. Chief Oil & Gas LLC; Pad ID: Kingsley B Drilling Pad; ABR–201112009.R2; Monroe Township, Bradford County; Pa.; Consumptive Use of Up to 2.0000 mgd; Approval Date: December 29, 2021.
18. Range Resources—Appalachia, LLC; Pad ID: Cornwall Mountain; ABR–201112040.R2; Lewis and Cogan House Townships, Lycoming County, Pa.; Consumptive Use of Up to 7.5000 mgd; Approval Date: December 29, 2021.

Authority: Public Law 91–575, 84 Stat. 1509 *et seq.,* 18 CFR parts 806, 807, and 808.

Dated: January 6, 2021.

Jason E. Oyler,

General Counsel and Secretary to the Commission.

[FR Doc. 2022–00317 Filed 1–10–22; 8:45 am]

BILLING CODE 7040–01–P

OFFICE OF THE UNITED STATES TRADE REPRESENTATIVE

Notice of Continuation and Request for Nominations for the Trade Advisory Committee on Africa

AGENCY: Office of the United States Trade Representative.

ACTION: Notice and request for applications.

SUMMARY: The Office of the United States Trade Representative (USTR) is establishing a new four-year charter term and accepting applications from qualified individuals interested in serving as a member of the Trade Advisory Committee on Africa (TACA). The TACA is a trade advisory committee that provides general policy advice and guidance to the U.S. Trade Representative on trade policy and development matters that have a significant impact on the countries of sub-Saharan Africa.

DATES: USTR will accept nominations on a rolling basis for membership on the TACA for the four-year charter term beginning in March 2022. To ensure consideration before the new charter term, you should submit your application by February 4, 2022.

FOR FURTHER INFORMATION CONTACT: Ethan Holmes, Director for Private Sector Engagement, *Ethan.M.Holmes@ustr.eop.gov,* or Bennett Harman, Deputy Assistant U.S. Trade Representative for Africa, *BHarman@ustr.eop.gov* or 202–395–9612.

SUPPLEMENTARY INFORMATION:

1. Background

Section 135(c)(1) of the Trade Act of 1974, as amended (19 U.S.C. 2155(c)(1)), authorizes the President to establish individual general trade policy advisory committees for industry, labor, agriculture, services, investment, defense, small business, and other interests, as appropriate, to provide general policy advice. The President delegated that authority to the U.S. Trade Representative in Executive Order 11846, section 4(d), issued on March 27, 1975. In addition, section 14 of the AGOA Acceleration Act of 2004, Public Law 108–274, 118 Stat. 829–830 (codified at 19 U.S.C. 3701 note) specifically acknowledges the TACA, which USTR established under these authorities. With limited statutory exceptions, the TACA is subject to the provisions of the Federal Advisory Committee Act.

Pursuant to these authorities, the U.S. Trade Representative intends to establish a new four-year charter term for the TACA, which will begin in March 2022.

The TACA is a discretionary trade advisory committee established to provide general policy advice to the U.S. Trade Representative on trade policy and development matters that have a significant impact on the countries of sub-Saharan Africa. More specifically, the TACA provides general policy advice on issues that may affect the countries of sub-Saharan Africa including: (1) Negotiating objectives and bargaining positions before entering into trade agreements; (2) the impact of the implementation of trade agreements; (3) matters concerning the operation of any trade agreement once entered into; and (4) other matters arising in connection with the development, implementation, and administration of the trade policy of the United States. The TACA also facilitates the goals and objectives of the African Growth and Opportunity Act (AGOA) and assists in maintaining ongoing discussions with sub-Saharan African trade and agriculture ministries and private sector organizations on issues of mutual concern, including regional and international trade concerns and World Trade Organization issues. The TACA meets as needed, at the call of the U.S. Trade Representative or their designee, or two-thirds of the TACA members, depending on various factors such as the level of activity of trade negotiations and the needs of the U.S. Trade Representative.

II. Membership

The TACA is composed of not more than 30 members who have expertise in general trade, investment and development issues and specific knowledge of United States-Africa trade and investment trends including trade under the AGOA; constraints to trade and investment (including infrastructure, energy and financing); trade facilitation measures; sanitary and phyto-sanitary measures and technical barriers to trade; trade capacity building; investment treaty negotiations; United States-Africa investment and private sector partnerships; and implementation of World Trade Organization agreements. Members may represent industry, organized labor, investment, agriculture, services, non-profit development organizations, academia, and small business. Fostering diversity, equity, inclusion and accessibility (DEIA) is one of the top priorities.

The U.S. Trade Representative appoints TACA members for a term that will not exceed the duration of this charter. Members serve at the discretion of the U.S. Trade Representative. Individuals can be reappointed for any number of terms.

The U.S. Trade Representative is committed to a trade agenda that advances racial equity and supports underserved communities and will seek advice and recommendations on trade policies that eliminate social and economic structural barriers to equality and economic opportunity, and to better understand the projected impact of proposed trade policies on communities of color and underserved communities. The U.S. Trade Representative strongly encourages diverse backgrounds and perspectives and makes appointments to the TACA without regard to political affiliation and in accordance with equal opportunity practices that promote diversity, equity, inclusion, and accessibility. USTR strives to ensure balance in terms of sectors, demographics, and other factors relevant to USTR's needs. Insofar as practicable, TACA membership will reflect regional diversity and be broadly representative of key sectors and groups of the economy with an interest in trade and sub-Saharan Africa issues, including U.S. citizens who are diaspora African and U.S. citizens of African descent with requisite knowledge and experience.

TACA members serve without either compensation or reimbursement of expenses. Members are responsible for all expenses they incur to attend meetings or otherwise participate in TACA activities.

The U.S. Trade Representative appoints TACA members to represent their sponsoring U.S. entity's interests on sub-Saharan Africa trade, and thus USTR's foremost consideration for applicants is their ability to carry out the goals of section 135(c) of the Trade Act of 1974, as amended. Other criteria include the applicant's knowledge of and expertise in international trade issues as relevant to the work of the TACA and USTR. USTR anticipates that almost all TACA members will serve in a representative capacity with a very limited number serving in an individual capacity as a subject matter expert. These members, known as special government employees or SGEs, are subject to conflict of interest rules and may have to complete a financial disclosure report.

III. Request for Nominations

USTR is soliciting nominations for membership on the TACA. To apply for membership, an applicant must meet the following eligibility criteria at the time of application and at all times during their term of service as a TACA member:

1. The applicant must be a U.S. citizen.
2. The applicant cannot be a full-time employee of a U.S. governmental entity.
3. If serving in an individual capacity as an SGE, the applicant cannot be a federally registered lobbyist.
4. The applicant cannot be registered with the U.S. Department of Justice under the Foreign Agents Registration Act.
5. The applicant must be able to obtain and maintain a security clearance.
6. For representative members, who will comprise virtually all of the TACA membership, the applicant must represent a U.S. organization whose members (or funders) have a demonstrated interest in issues relevant to U.S. African trade and investment or have personal experience or expertise in United States-sub-Saharan African trade.

For eligibility purposes, a ''U.S. organization'' is an organization established under the laws of the United States, that is controlled by U.S. citizens, by another U.S. organization (or organizations), or by a U.S. entity (or entities), determined based on its board of directors (or comparable governing body), membership, and funding sources, as applicable. To qualify as a U.S. organization, more than 50 percent of the board of directors (or comparable governing body) and more than 50 percent of the membership of the organization to be represented must be U.S. citizens, U.S. organizations, or U.S. entities. Additionally, at least 50 percent of the organization's annual revenue must be attributable to nongovernmental U.S. sources.

7. For members who will serve in an individual capacity, the applicant must possess subject matter expertise regarding sub-Saharan Africa trade issues.

In order to be considered for TACA membership, interested persons should submit the following to Ethan Holmes, Director for Private Sector Engagement, at *Ethan.M.Holmes@ustr.eop.gov:*

- Name, title, affiliation, and contact information of the individual requesting consideration.
- If applicable, a sponsor letter on the organization's letterhead containing a brief description of the manner in which international trade affects the organization and why USTR should consider the applicant for membership.
- The applicant's personal resume.
- An affirmative statement that the applicant and the organization they represent meet all eligibility requirements.

USTR will consider applicants who meet the eligibility criteria in accordance with equal opportunity practices that promote diversity, equity, inclusion, and accessibility, based on the following factors:

- Ability to represent the sponsoring U.S. entity's or U.S. organization's and its subsector's interests on sub-Saharan Africa trade matters.
- Knowledge of and experience in trade matters relevant to the work of the TACA and USTR.
- How they will contribute to trade policies that eliminate social and economic structural barriers to equality and economic opportunity and to understanding of the projected impact of proposed trade policies on communities of color and underserved communities.
- Ensuring that the TACA is balanced in terms of points of view, demographics, geography, and entity or organization size.

Constance Hamilton,

Assistant U.S. Trade Representative for Africa, Office of the United States Trade Representative.

[FR Doc. 2022–00245 Filed 1–10–22; 8:45 am]

BILLING CODE 3390–F2–P

DEPARTMENT OF TRANSPORTATION

Federal Aviation Administration

Notice of Intent To Rule on Request To Release Airport Property at the Saline County Regional Airport, Benton, Arkansas

AGENCY: Federal Aviation Administration (FAA), DOT.

ACTION: Notice of request to release airport property.

SUMMARY: The FAA proposes to rule and invite public comment on the release of land at the Saline County Regional Airport under the provisions of Section 125 of the Wendell H. Ford Aviation Investment Reform Act for the 21st Century (AIR 21).

DATES: Comments must be received on or before (from 30 days of the posting of this **Federal Register** Notice).

ADDRESSES: Comments on this application may be mailed or delivered to the FAA at the following address: Mr. Glenn A. Boles, Manager, Federal Aviation Administration, Southwest Region, Airports Division, Arkansas/Oklahoma Airports Development Office, ASW–630, Fort Worth, Texas 76177.

In addition, one copy of any comments submitted to the FAA must be mailed or delivered to Judge Jeff Arey, Saline County Judge, at the following address: 200 North Main Street, RM117, Benton, AR 72015.

FOR FURTHER INFORMATION CONTACT: Ms. Sara K. Fields-Pack, Program Manager, Federal Aviation Administration, Arkansas/Oklahoma Airports Development Office, ASW–630, 10101 Hillwood Parkway, Fort Worth, Texas 76177, Telephone: (817) 222–4101, Email: *sara.k.fields-pack@faa.gov.*

SUPPLEMENTARY INFORMATION: The FAA invites public comment on the request to release property at the Saline County Regional Airport under the provisions of the AIR 21.

The following is a brief overview of the request:

Saline County requests the release of 28.97 acres of excess aeronautical land. The property will be sold for non-aeronautical land use purposes.

Any person may inspect the request in person at the FAA office listed above under **FOR FURTHER INFORMATION CONTACT**.

In addition, any person may, upon request, inspect the application, notice and other documents relevant to the application in person at the Saline County Attorney, telephone number (501) 303–1555.

Ignacio Flores,

Director, Office of Airports Southwest Region.

[FR Doc. 2022–00241 Filed 1–10–22; 8:45 am]

BILLING CODE P

DEPARTMENT OF TRANSPORTATION

Federal Aviation Administration

Waiver of Aeronautical Land Use Assurance: Kansas City International Airport (MCI), Kansas City, MO

AGENCY: Federal Aviation Administration (FAA), DOT.

ACTION: Notice of Intent of Waiver with respect to land use change from aeronautical to non-aeronautical.

SUMMARY: The Federal Aviation Administration (FAA) is considering a proposal from the City of Kansas City, MO, to release a 13.94 acre parcel of land from the federal obligation dedicating it to aeronautical use and to authorize this parcel to be used for revenue-producing, non-aeronautical purposes.

DATES: Comments must be received on or before February 10, 2022.

ADDRESSES: Comments on this application may be mailed or delivered to the FAA at the following address: Amy J. Walter, Airports Land Specialist, Federal Aviation Administration, Airports Division, ACE–620G, 901 Locust, Room 364, Kansas City, MO 64106.

In addition, one copy of any comments submitted to the FAA must be mailed or delivered to: Patrick Klein, Director of Aviation or Mike Waller, Senior Planner, Kansas City International Airport, Aviation Department, 601 Brasilia Avenue, Kansas City, MO 64153, (816) 243–3100.

FOR FURTHER INFORMATION CONTACT: Amy J. Walter, Airports Land Specialist, Federal Aviation Administration, Airports Division, ACE–620G, 901 Locust Room 364, Kansas City, MO 64106, Telephone number (816) 329–2603, Fax number (816) 329–2611, email address: *amy.walter@faa.gov.*

SUPPLEMENTARY INFORMATION: The FAA invites public comment on the request to change a 13.94 acre parcel of airport property at the Kansas City International Airport (MCI) from aeronautical use to non-aeronautical revenue producing use. This parcel will be leased for the relocation and construction of the FBI Kansas City Division Headquarters.

No airport landside or airside facilities are presently located on this parcel, nor are airport developments contemplated in the future. There is no current use of the surface of the parcel. The parcel will serve as a revenue producing lot with the proposed change from aeronautical to non-aeronautical. The request submitted by the Sponsor meets the procedural requirements of the Federal Aviation Administration and the change to non-aeronautical status of the property does not and will not impact future aviation needs at the airport. The FAA may approve the request, in whole or in part, no sooner than thirty days after the publication of this Notice.

The following is a brief overview of the request:

The Kansas City International Airport (MCI) is proposing the use release of a 13.94 acre parcel of land from aeronautical to non-aeronautical. The use release of land is necessary to comply with Federal Aviation Administration Grant Assurances that do not allow federally acquired airport property to be used for non-aviation purposes. The rental of the subject property will result in the land at the Kansas City International Airport (MCI) being changed from aeronautical to non-aeronautical use and release the lands from the conditions of the Airport Improvement Program Grant Agreement Grant Assurances. In accordance with 49 U.S.C. 47107(c)(2)(B)(i) and (iii), the airport will receive fair market rental value for the property. The annual income from rent payments will generate a long-term, revenue-producing stream that will further the Sponsor's obligation under FAA Grant Assurance number 24, to make the Kansas City International Airport as financially self-sufficient as possible.

Any person may inspect, by appointment, the request in person at the FAA office listed above. In addition, any person may upon request, inspect the application, notice and other documents determined by the FAA to be related to the application in person at the Kansas City International Airport—Aviation Department.

Issued in Kansas City, MO, on January 6, 2022.

James A. Johnson,

Director, FAA Central Region, Airports Division.

[FR Doc. 2022–00287 Filed 1–10–22; 8:45 am]

BILLING CODE 4910–13–P

DEPARTMENT OF TRANSPORTATION

Federal Motor Carrier Safety Administration

[Docket No. FMCSA–2021–0014]

Qualification of Drivers; Exemption Applications; Vision

AGENCY: Federal Motor Carrier Safety Administration (FMCSA), Department of Transportation (DOT).

ACTION: Notice of final disposition.

SUMMARY: FMCSA announces its decision to exempt 11 individuals from the vision requirement in the Federal Motor Carrier Safety Regulations (FMCSRs) to operate a commercial motor vehicle (CMV) in interstate commerce. They are unable to meet the vision requirement in one eye for various reasons. The exemptions enable these individuals to operate CMVs in interstate commerce without meeting the vision requirement in one eye.

DATES: The exemptions were applicable on December 28, 2021. The exemptions expire on December 28, 2023.

FOR FURTHER INFORMATION CONTACT: Ms. Christine A. Hydock, Chief, Medical Programs Division, (202) 366–4001, *fmcsamedical@dot.gov,* FMCSA, DOT, 1200 New Jersey Avenue SE, Room W64–224, Washington, DC 20590–0001. Office hours are from 8:30 a.m. to 5 p.m., ET, Monday through Friday, except Federal holidays. If you have questions regarding viewing or submitting material to the docket, contact Dockets Operations, (202) 366–9826.

SUPPLEMENTARY INFORMATION:

I. Public Participation

A. Viewing Comments

To view comments go to *www.regulations.gov,* insert the docket number, FMCSA–2021–0014, in the keyword box, and click ''Search.'' Next, sort the results by ''Posted (Newer-Older),'' choose the first notice listed, and click ''Browse Comments.'' If you do not have access to the internet, you may view the docket online by visiting Dockets Operations in Room W12–140 on the ground floor of the DOT West Building, 1200 New Jersey Avenue SE, Washington, DC 20590–0001, between 9 a.m. and 5 p.m., ET, Monday through Friday, except Federal holidays. To be sure someone is there to help you, please call (202) 366–9317 or (202) 366–9826 before visiting Dockets Operations.

B. Privacy Act

In accordance with 5 U.S.C. 553(c), DOT solicits comments from the public to better inform its regulatory process. DOT posts these comments, without edit, including any personal information the commenter provides, to *www.regulations.gov,* as described in the system of records notice (DOT/ALL–14 FDMS), which can be reviewed at *www.transportation.gov/privacy.*

II. Background

On November 24, 2021, FMCSA published a notice announcing receipt of applications from 11 individuals requesting an exemption from vision requirement in 49 CFR 391.41(b)(10) and requested comments from the public (86 FR 67112). The public comment period ended on December 27, 2021, and no comments were received.

FMCSA has evaluated the eligibility of these applicants and determined that granting the exemptions to these individuals would achieve a level of safety equivalent to, or greater than, the level that would be achieved by complying with § 391.41(b)(10).

The physical qualification standard for drivers regarding vision found in § 391.41(b)(10) states that a person is physically qualified to drive a CMV if that person has distant visual acuity of at least 20/40 (Snellen) in each eye without corrective lenses or visual acuity separately corrected to 20/40 (Snellen) or better with corrective lenses, distant binocular acuity of a least

20/40 (Snellen) in both eyes with or without corrective lenses, field of vision of at least 70° in the horizontal meridian in each eye, and the ability to recognize the colors of traffic signals and devices showing red, green, and amber.

III. Discussion of Comments

FMCSA received no comments in this proceeding.

IV. Basis for Exemption Determination

Under 49 U.S.C. 31136(e) and 31315(b), FMCSA may grant an exemption from the FMCSRs for no longer than a 5-year period if it finds such exemption would likely achieve a level of safety that is equivalent to, or greater than, the level that would be achieved absent such exemption. The statute also allows the Agency to renew exemptions at the end of the 5-year period. FMCSA grants medical exemptions from the FMCSRs for a 2-year period to align with the maximum duration of a driver's medical certification.

The Agency's decision regarding these exemption applications is based on medical reports about the applicants' vision, as well as their driving records and experience driving with the vision deficiency. The qualifications, experience, and medical condition of each applicant were stated and discussed in detail in the November 24, 2021, **Federal Register** notice (86 FR 67112) and will not be repeated here.

FMCSA recognizes that some drivers do not meet the vision requirement but have adapted their driving to accommodate their limitation and demonstrated their ability to drive safely. The 11 exemption applicants listed in this notice are in this category. They are unable to meet the vision requirement in one eye for various reasons, including amblyopia, anterior synechiae, cataract, complete vision loss, corneal scarring, extropia, macular degeneration, macular retinal detachment, and prosthesis. In most cases, their eye conditions did not develop recently. Four of the applicants were either born with their vision impairments or have had them since childhood. The seven individuals that developed their vision conditions as adults have had them for a range of 4 to 33 years. Although each applicant has one eye that does not meet the vision requirement in § 391.41(b)(10), each has at least 20/40 corrected vision in the other eye, and, in a doctor's opinion, has sufficient vision to perform all the tasks necessary to operate a CMV.

Doctors' opinions are supported by the applicants' possession of a valid license to operate a CMV. By meeting State licensing requirements, the applicants demonstrated their ability to operate a CMV with their limited vision in intrastate commerce, even though their vision disqualified them from driving in interstate commerce. We believe that the applicants' intrastate driving experience and history provide an adequate basis for predicting their ability to drive safely in interstate commerce. Intrastate driving, like interstate operations, involves substantial driving on highways on the interstate system and on other roads built to interstate standards. Moreover, driving in congested urban areas exposes the driver to more pedestrian and vehicular traffic than exists on interstate highways. Faster reaction to traffic and traffic signals is generally required because distances between them are more compact. These conditions tax visual capacity and driver response just as intensely as interstate driving conditions.

The applicants in this notice have driven CMVs with their limited vision in careers ranging for 3 to 49 years. In the past 3 years, one driver was involved in a crash, and no drivers were convicted of moving violations in CMVs. All the applicants achieved a record of safety while driving with their vision impairment that demonstrates the likelihood that they have adapted their driving skills to accommodate their condition. As the applicants' ample driving histories with their vision deficiencies are good predictors of future performance, FMCSA concludes their ability to drive safely can be projected into the future.

Consequently, FMCSA finds that in each case exempting these applicants from the vision requirement in § 391.41(b)(10) is likely to achieve a level of safety equal to that existing without the exemption.

V. Conditions and Requirements

The terms and conditions of the exemption are provided to the applicants in the exemption document and includes the following: (1) Each driver must be physically examined every year (a) by an ophthalmologist or optometrist who attests that the vision in the better eye continues to meet the standard in § 391.41(b)(10) and (b) by a certified medical examiner (ME) who attests that the individual is otherwise physically qualified under § 391.41; (2) each driver must provide a copy of the ophthalmologist's or optometrist's report to the ME at the time of the annual medical examination; and (3) each driver must provide a copy of the annual medical certification to the employer for retention in the driver's qualification file, or keep a copy in his/her driver's qualification file if he/she is self-employed. The driver must also have a copy of the exemption when driving, for presentation to a duly authorized Federal, State, or local enforcement official.

VI. Preemption

During the period the exemption is in effect, no State shall enforce any law or regulation that conflicts with this exemption with respect to a person operating under the exemption.

VII. Conclusion

Based upon its evaluation of the 11 exemption applications, FMCSA exempts the following drivers from the vision requirement, § 391.41(b)(10), subject to the requirements cited above:

Travis Crosson
George M. Hapchuk
Gerald E. Hartman
Derek E. Haynes
Dale O. Hoover
Michael R. Jackson
Silvian N. Jones
Mark S. Phillips
Jessie W. Shearer
Ryan K. Terrill
Darrin Wilson

In accordance with 49 U.S.C. 31136(e) and 31315(b), each exemption will be valid for 2 years from the effective date unless revoked earlier by FMCSA. The exemption will be revoked if the following occurs: (1) The person fails to comply with the terms and conditions of the exemption; (2) the exemption has resulted in a lower level of safety than was maintained prior to being granted; or (3) continuation of the exemption would not be consistent with the goals and objectives of 49 U.S.C. 31136(e) and 31315(b).

Larry W. Minor,

Associate Administrator for Policy.

[FR Doc. 2022–00247 Filed 1–10–22; 8:45 am]

BILLING CODE 4910–EX–P

DEPARTMENT OF TRANSPORTATION

Federal Railroad Administration

[Docket Number FRA–2011–0009]

Petition for Extension of Waiver of Compliance

Under part 211 of title 49 Code of Federal Regulations (CFR), this document provides the public notice that on November 7 and 8, 2021, the Nevada Northern Railway Museum (NNR) petitioned the Federal Railroad Administration (FRA) for an extension of a waiver of compliance from certain

provisions of the Federal railroad safety regulations contained at 49 CFR parts 215 (Railroad Freight Car Safety Standards) and 224 (Reflectorization of Rail Freight Rolling Stock). The relevant FRA Docket Number is FRA–2011–0009.

Specifically, NNR requested to extend its special approval pursuant to 49 CFR 215.203, *Restricted cars,* for a total of 13 cars, including 2 cabooses (NN 22 and NN 3), 2 flat cars (NN 23 and NN 100), 5 hopper cars (WSOR 102, WSOR 128, WSOR 134, WSOR 158, and WSOR 159), and 4 boxcars (NN 1021, NN 1023, NN 1024, and NN1025) that are more than 50 years from the date of original construction.[1] NNR also requests to extend its existing relief from 49 CFR 215.303, *Stenciling of restricted cars,* and 224.101, *General requirements.* NNR seeks to continue use of the cars in mobile storage, occasional tourist photographic events, and tourist excursion operations. In support of its request, NNR states that the relief would enable the cars to maintain historic integrity and that the cars would remain on NNR's track, not connected to the general railroad system.

A copy of the petition, as well as any written communications concerning the petition, is available for review online at *www.regulations.gov.*

Interested parties are invited to participate in these proceedings by submitting written views, data, or comments. FRA does not anticipate scheduling a public hearing in connection with these proceedings since the facts do not appear to warrant a hearing. If any interested party desires an opportunity for oral comment and a public hearing, they should notify FRA, in writing, before the end of the comment period and specify the basis for their request.

All communications concerning these proceedings should identify the appropriate docket number and may be submitted at *http://www.regulations.gov.* Follow the online instructions for submitting comments.

Communications received by February 25, 2022 will be considered by FRA before final action is taken. Comments received after that date will be considered if practicable. Anyone can search the electronic form of any written communications and comments received into any of our dockets by the name of the individual submitting the comment (or signing the document, if submitted on behalf of an association, business, labor union, etc.). Under 5 U.S.C. 553(c), the U.S. Department of Transportation (DOT) solicits comments from the public to better inform its processes. DOT posts these comments, without edit, including any personal information the commenter provides, to *www.regulations.gov,* as described in the system of records notice (DOT/ALL–14 FDMS), which can be reviewed at *https://www.transportation.gov/privacy.* See also *https://www.regulations.gov/privacy-notice* for the privacy notice of *regulations.gov.*

Issued in Washington, DC.

John Karl Alexy,

Associate Administrator for Railroad Safety Chief Safety Officer.

[FR Doc. 2022–00345 Filed 1–10–22; 8:45 am]

BILLING CODE 4910–06–P

[1] Along with its request to renew the relief in this docket, NNR submitted a request to extend the relief in Docket Number FRA–2016–0110 and combine that relief into the FRA–2011–0009 docket.

DEPARTMENT OF TRANSPORTATION

[Docket No. DOT–OST–2021–0166]

Agency Request for Emergency Approval of an Information Collection

AGENCY: Department of Transportation.

ACTION: Notice and request for comments.

SUMMARY: In compliance with the Paperwork Reduction Act of 1995, the Department of Transportation (DOT) provides notice that it will submit an information collection requests (ICR) to the Office of Management and Budget (OMB) for emergency approval of a proposed information collection. Upon receiving the requested six-month emergency approval by OMB, the Office of the Secretary (OST) will follow the normal PRA procedures to obtain extended approval for this proposed information collection. This collection involves applicants to submit a proposal for discretionary grant funding, under the ''National Infrastructure Project Assistance Program, established by the Infrastructure Investment and Jobs Act of 2021, November 15, 2021, ''Bipartisan Infrastructure Law'', or ''BIL''. OST is requesting emergency approval due to the urgency of making the associated funds available to applicants that meet the eligibility requirements under the law. The continued viability of these funds is critical in supporting the transportation infrastructure needs across the United States. The statutory requirements of the BIL also establish a strict 90-day timeframe from the date of enactment to publish a Notice of Funding Opportunity.

DATES: Comments should be submitted as soon as possible upon publication of this notice in the **Federal Register**.

ADDRESSES: Comments and questions should be directed to the Office of Information and Regulatory Affairs (OIRA), Attn: OST OMB Desk Officer, 725 17th Street NW, Washington, DC 20503. Comments and questions about the ICR identified below may be transmitted electronically to OIRA at *oira_submissions@omb.eop.gov.*

FOR FURTHER INFORMATION CONTACT: Information related to this ICR, including applicable supporting documentation may be obtained by contacting John Augustine, Office of Infrastructure Finance and Innovation in the office of the Under Secretary for Transportation Policy (OST–P–40), W84–306, Department of Transportation, 1200 New Jersey Avenue SE, Washington, DC 20590, (202) 366–5437.

SUPPLEMENTARY INFORMATION: The Paperwork Reduction Act of 1995 (44 U.S.C. chapter 35; as amended) and 5 CFR part 1320 require each Federal agency to obtain OMB approval to initiate an information collection activity. DOT is seeking OMB approval for the following DOT information collection activity:

OMB Control Number: 2105–XXXX.

Title: National Infrastructure Project Assistance Program.

Form Numbers: New Collection.

Type of Review: Emergency information collection request.

Expected Number of Respondents: 100.

Frequency: One-time application, to be followed by grant agreement execution, reimbursement of funds, and project closeout.

Estimated Average Burden per Response: 100 (application submission, grant agreement execution, project management, and project evaluation/reporting).

Estimated Total Annual Burden: 10,000.

Abstract: On November 15, 2021 the Infrastructure Investment and Jobs Act of 2021 (Pub. L. 117–58) ''Bipartisan Infrastructure Law (BIL)'' was enacted. Section 6701 established the National Infrastructure Project Assistance Program, to provide capital investments in surface transportation infrastructure that will have a significant local or regional impact.

Application Stage

In order to be considered to receive a grant, a project sponsor must submit an application to OST containing a project narrative, as detailed in the Notice of Funding Opportunity. The project narrative should include the information necessary for the

Department to determine that the project satisfies eligibility requirements as warranted by law.

The Department will receive applications and reports electronically via email and via websites from grant awardees upon approval from OMB. In order to minimize the burden on applicants, OMB approved standard forms are being used to collect information where possible. Such standard forms include the Application for Federal Assistance (SF–424), available online at *https://apply07.grants.gov/apply/forms/sample/SF424_2_1-V2.1.pdf,* and the post-award Federal Financial Reports form (SF–425), available online at *https://apply07.grants.gov/apply/forms/sample/SF425_2_0-V2.0.pdf.*

All information submitted as part of or in support of any application shall use publicly available data or data that can be made public. If the application includes information the applicant considers to be a trade secret or confidential commercial or financial information, the applicant should do the following: (1) Note on the front cover that the submission ''Contains Confidential Business Information (CBI)''; (2) mark each affected page ''CBI''; and (3) highlight or otherwise denote the CBI portions. DOT protects such information from disclosure to the extent allowed under applicable law. In the event DOT receives a Freedom of Information Act (FOIA) request for the information, DOT will follow the procedures described in its FOIA regulations at 49 CFR 7.17. Only information that is ultimately determined to be confidential under that procedure will be exempt from disclosure under FOIA. This grant program is voluntary. No stakeholder is required to participate. However, participating stakeholders will be expected to provide the following information.

The Department will collect the following information:

- Legal name of the applicant (*i.e.,* the legal name of the business entity), as well as any other identities under which the applicant may be doing business.
- Address, telephone, and email contact information for the applicant.
- Name and title of the authorized representative of the applicant (who will attest to the required certifications).
- DOT may also require the identity of external parties involved in preparation of the application, who may be assisting the applicant that is applying for assistance under this program.
- The specific statutory criteria that the applicant meets for eligibility under this program.
  - ○ The statute defines eligible applicants to include States, the District of Columbia; the Commonwealth of Puerto Rico; the Commonwealth of the Northern Mariana Islands; the United States Virgin Islands; American Samoa; and, any other territory or possession of the United States; a unit of local government; a metropolitan planning organization; a unit of local government; a political subdivision of a State; a special purpose district or public authority with a transportation function, including a port authority; a Tribal government or a consortium of Tribal governments; a partnership between Amtrak and 1 or more entities described above; and a group of entities described above.
  - ○ The statute defines eligible projects to include:

(A) A highway or bridge project carried out on: (i) The National Multimodal Freight Network established under section 70103; (ii) the National Highway Freight Network established under section 167 of title 23; or (iii) the National Highway System (as defined in section 101(a) of title 23);

(B) a freight intermodal (including public ports) or freight rail project that provides a public benefit;

(C) a railway-highway grade separation or elimination project;

(D) an intercity passenger rail project;

(E) a public transportation project that is: (i) Eligible for assistance under chapter 53; and (ii) part of a project described in any of subparagraphs (A) through (D); or

(F) a grouping, combination, or program of interrelated, connected, or dependent projects of any of the projects described in subparagraphs (A) through (E); and the eligible project costs of which are: (A) Reasonably anticipated to equal or exceed $500,000,000; or (B) for any project funded by the set-aside under subsection (m)(2): (i) More than $100,000,000; but (ii) less than $500,000,000.

- The specific statutory criteria for the applicant's location:
  - ○ Whether the applicant is located in an urban or rural area, as defined by the statute and outlined in the Notice of Funding Opportunity. This information and supporting documentation will be required to ensure geographical diversity, and a balance between rural and urban communities.
  - ○ Whether the applicant is located in an area of persistent poverty and/or a historically disadvantaged community.
- A narrative description of how the project aligns with the program criteria.
- Criteria include the extent to which the project: Supports achieving a state of good repair; the level of benefits the project is expected to generate; the benefits as compared to the costs; the number of persons or volume of freight supported by the project; national and regional economic benefits; as well as additional considerations, including: Contributions to geographical diversity the including a balance between the needs of urban/rural areas; whether multiple states would benefit from a project; whether, and the degree to which, a project uses: Construction materials/approaches that have: Demonstrated GHG reductions, and a reduced the need for maintenance of other projects; technologies that will allow for future connectivity and automation; whether a project benefits: A historically disadvantaged community or population or an area or persistent poverty; whether a project benefits users of multiple modes, including: Pedestrians, bicyclists, and users of non-vehicular rail and public transportation, including intercity and commuter rail; whether a project improves connectivity between modes of transportation moving persons or goods nationally or regionally.
- A detailed project budget, including the grant request amount, other Federal funds, and non-Federal contributions. DOT requires this information to calculate the cost share requirements outlined in statute. Applicants will be required to provide supporting documentation in sufficient detail to describe the project cost breakdown.
- A plan for the collection and analysis of data to identify: The impacts of the project; and the accuracy of any forecast prepared during the development phase of the project and included in the grant application.
- Other identification numbers, such as their Data Universal Numbering System (DUNS) number, Unique Entity Identifier under 2 CFR part 25, etc. All applicants will be required to have pre-registered with the System for Award Management (SAM) at *https://sam.gov/SAM/.*

Grant Agreement Stage

The grant agreement is an agreement between DOT and the recipient. In the grant agreement, the recipient must describe the project that DOT agreed to fund, which is typically the project that was described in the application or a reduced-scope version of that project. The grant agreement must also include a detailed breakdown of the project schedule and a budget listing all major activities that will be completed as part of the project.

Project Management Stage

The reporting requirements under this stage are necessary to ensure the proper and timely expenditure of federal funds within the scope of the approved project. The requirements comply with the Common Grant Rule, and are also included in sections of the grant agreement. During the project management stage, the grantee will complete Quarterly Progress and Monitoring Reports to ensure that the project budget and schedule will be maintained to the maximum extent possible, that the project will be completed with the highest degree of quality, and that compliance with Federal regulations will be met. The substantive requirements of the report include: The project's overall status; project significant activities and issues; action items/outstanding issues; project scope overview; project schedule; project cost; an SF–425 Federal Financial Report; and certifications. This reporting requirement will greatly reduce the need for on-site visits by staff.

Project Evaluation Stage

The reporting requirement under this stage is necessary to assess the long-term impact of the project by comparing the baseline data provided in the data collection plan as required in the application to project data collected during the five (5) years after project completion. This electronic spreadsheet report is collected once, at least five (5) years after project completion from grantees to help measure the effectiveness of the grants as a program. Information provided will allow the Government to analyze project performance.

Authority: The Paperwork Reduction Act of 1995; 44 U.S.C. chapter 35, as amended; and 49 CFR 1:48.

Issued in Washington, DC.

John Augustine,

Director, Office of Infrastructure Finance and Innovation, Office of the Secretary.

[FR Doc. 2022–00334 Filed 1–10–22; 8:45 am]

BILLING CODE 4910–9X–P

DEPARTMENT OF THE TREASURY

Financial Crimes Enforcement Network

Agency Information Collection Activities; Proposed Renewal; Comment Request; Renewal Without Change of Reports of Transactions With Foreign Financial Agencies

AGENCY: Financial Crimes Enforcement Network (FinCEN), Treasury.

ACTION: Notice and request for comments.

SUMMARY: As part of its continuing effort to reduce paperwork and respondent burden, FinCEN invites comments on the proposed renewal, without change, of a currently approved information collection found in existing Bank Secrecy Act regulations. Specifically, the regulations authorize the Secretary of the Treasury, as appropriate, to promulgate regulations requiring specified financial institutions to file reports with the Financial Crimes Enforcement Network of certain transactions with designated foreign financial agencies. Although no changes are proposed to the information collection itself, this request for comments covers a future expansion of the scope of the annual hourly burden and cost estimate associated with these regulations. This request for comments is made pursuant to the Paperwork Reduction Act of 1995.

DATES: Written comments are welcome, and must be received on or before March 14, 2022

ADDRESSES: Comments may be submitted by any of the following methods:

- *Federal E-rulemaking Portal: http://www.regulations.gov.* Follow the instructions for submitting comments. Refer to Docket Number FINCEN–2022–0001 and the specific Office of Management and Budget (OMB) control number 1506–0055.
- *Mail:* Policy Division, Financial Crimes Enforcement Network, P.O. Box 39, Vienna, VA 22183. Refer to Docket Number FINCEN–2022–0001 and OMB control number 1506–0055.

Please submit comments by one method only. Comments will generally become a matter of public record. For this reason, please do not include in your comments information of a confidential nature, such as sensitive personal information or proprietary information. A comment about the burden posed to a financial institution by a regulation requiring the reporting of certain transactions with designated foreign financial agencies, but that does not describe the regulation or the reporting requirement in detail will not be considered to contain confidential information.

FOR FURTHER INFORMATION CONTACT: The FinCEN Regulatory Support Section at 1–800–767–2825 or electronically at *frc@fincen.gov.*

SUPPLEMENTARY INFORMATION:

I. Statutory and Regulatory Provisions

The legislative framework generally referred to as the Bank Secrecy Act (BSA) consists of the Currency and Financial Transactions Reporting Act of 1970, as amended by the Uniting and Strengthening America by Providing Appropriate Tools Required to Intercept and Obstruct Terrorism Act of 2001 (USA PATRIOT Act), Public Law 107–56 (October 26, 2001), and other legislation, including most recently the Anti-Money Laundering Act of 2020 (AML Act).[1] The BSA is codified at 12 U.S.C. 1829b, 12 U.S.C. 1951–1960, 31 U.S.C. 5311–5314 and 5316–5336, and includes notes thereto, with implementing regulations at 31 CFR Chapter X.

The BSA authorizes the Secretary of the Treasury, *inter alia,* to require financial institutions to keep records and file reports that are determined to have a high degree of usefulness in criminal, tax, and regulatory matters, or in the conduct of intelligence or counter-intelligence activities to protect against international terrorism, and to implement AML programs and compliance procedures.[2] Regulations implementing the BSA appear at 31 CFR Chapter X. The authority of the Secretary to administer the BSA has been delegated to the Director of FinCEN.[3]

The Secretary is authorized to require any ''resident or citizen of the United States or a person in, and doing business in, the United States, to . . . keep records and file reports, when the resident, citizen, or person makes a transaction or maintains a relation for any person with a foreign financial agency.''[4] The term ''foreign financial agency''[5] (FFA) means any person

[1] The AML Act was enacted as Division F, §§ 6001–6511, of the William M. (Mac) Thornberry National Defense Authorization Act for Fiscal Year 2021, Public Law 116–283, 134 Stat 3388 (2021).

[2] Section 358 of the USA PATRIOT Act added language expanding the scope of the BSA to intelligence or counter-intelligence activities to protect against international terrorism. Section 6101 of the AML Act added language further expanding the scope of the BSA but did not amend these longstanding purposes.

[3] Treasury Order 180–01 (re-affirmed Jan. 14, 2020).

[4] 31 U.S.C. 5314(a).

[5] 31 U.S.C. 5312(b)(2).

engaging in any activities outside the United States of a ''financial agency,'' which the statute defines as ''a person acting for a person . . . as a financial institution, bailee, depository trustee, or agent, or acting in a similar way related to money, credit, securities, gold, or a transaction in money, credit, securities or gold, or a service provided with respect to money, securities, futures, precious metals, stones and jewels, or value that substitutes for currency.'' [6] The Secretary is also authorized to prescribe exemptions to the reporting requirement and to prescribe other matters the Secretary considers necessary to carry out 31 U.S.C. 5314. The regulations implementing reports of transactions with foreign financial agencies are found at 31 CFR 1010.360.

31 CFR 1010.360(a) authorizes the Secretary, when the Secretary deems appropriate, to promulgate regulations requiring specified financial institutions to file reports of certain transactions with designated FFAs.[7]

A regulation promulgated pursuant to 31 CFR 1010.360(a) must designate one or more of the following categories of information to be reported by the specified financial institution:

- Checks or drafts, including traveler's checks, received by a respondent financial institution for collection or credit to the account of a designated FFA, sent by the respondent financial institution to a foreign country for collection or payment, drawn by the respondent financial institution on a designated FFA, or drawn by a designated FFA on the respondent financial institution, including the following information: Name of maker or drawer; name of drawee or drawee financial institution; name of payee; date and amount of instrument; and names of all endorsers.
- Transmittal orders received by a respondent financial institution from a designated FFA or sent by the respondent financial institution to a designated FFA, including all information maintained by that institution pursuant to 31 CFR 1010.410 and 1020.410.
- Loans made by a respondent financial institution to or through a designated FFA, including the following information: Name of borrower; name of person acting for borrower; date and amount of loan; terms of repayment; name of guarantor; rate of interest; method of distributing proceeds; and collateral for loan.
- Commercial paper received or shipped by a respondent financial institution, including the following information: Name of maker; date and amount of paper; due date; certificate number; and amount of transaction.
- Stocks received or shipped by a respondent financial institution, including the following information: Name of corporation; type of stock; certificate number; number of shares; date of certificate; name of registered holder; and amount of transaction.
- Bonds received or shipped by a respondent financial institution, including the following information: Name of issuer; bond number; type of bond series; date issued; due date; rate of interest; amount of transaction; and name of registered holder.
- Certificates of deposit received or shipped by a respondent financial institution, including the following information: Name and address of issuer; date issued; dollar amount; name of registered holder; due date; rate of interest; certificate number; and name and address of issuing agent.

In issuing regulations as provided in 31 CFR 1010.360(a), the Secretary must prescribe: A reasonable classification of financial institutions subject to or exempt from a reporting requirement; a foreign country to which a reporting requirement applies if the Secretary decides that applying the requirement to all foreign countries is unnecessary or undesirable; the magnitude of transactions subject to a reporting requirement; and the kind of transaction subject to or exempt from a reporting requirement.

Regulations issued pursuant to 31 CFR 1010.360(a) may prescribe the manner in which the information is to be reported. However, the Secretary may authorize a designated financial institution to report in a different manner if the institution demonstrates to the Secretary that the form of the required report is unnecessarily burdensome on the institution as prescribed; that a report in a different form will provide all the information the Secretary deems necessary; and that submission of the information in a different manner will not unduly hinder the effective administration of 31 CFR Chapter X.

In issuing regulations under 31 CFR 1010.360(e), the Secretary: (i) Must consider the need to avoid impeding or controlling the export or import of monetary instruments and the need to avoid burdening unreasonably a person making a transaction with a designated FFA; (ii) cannot issue a regulation under 31 CFR 1010.360(a) for the purpose of obtaining individually identifiable account information concerning a customer, as defined by the Right to Financial Privacy Act,[8] where that customer is already the subject of an ongoing investigation for possible violation of the BSA, or is known by the Secretary to be the subject of an investigation for possible violation of any other Federal law; and (iii) may issue a regulation pursuant to 31 CFR 1010.360(a) requiring a financial institution to report transactions completed prior to the date it received notice of the reporting requirement. However, with respect to completed transactions, a financial institution may be required to provide information only from records required to be maintained pursuant to the requirements of 31 CFR Chapter X, or any other provision of state or Federal law, or otherwise maintained in the regular course of business.

31 CFR 1010.430(d) requires that all records that are required to be retained by Chapter X must be retained for a period of five years.

II. Paperwork Reduction Act of 1995 (PRA) [9]

Title: Reports of transactions with foreign financial agencies (31 CFR 1010.360).

OMB Control Number: 1506–0055.

Report Number: Not applicable.

Abstract: FinCEN is issuing this notice to renew the OMB control number for regulations requiring reports of transactions with designated FFAs.

Affected Public: Businesses or other for-profit institutions, and non-profit institutions.

Type of Review:

- Renewal without change of a currently approved information collection.
- Propose for review and comment a renewal of the portion of the PRA burden that has been subject to notice and comment in the past (the ''traditional annual PRA burden'').

[6] *See* 31 U.S.C. 5312(a)(1) as amended by 6102 (d)(1)(A) of the AML Act. The definition of financial agency exempts a person acting for a country, a monetary or financial authority acting as a monetary or financial authority, or an international financial institution of which the United States Government is a member.

[7] If such a regulation is issued as a final rule without notice and opportunity for public comment, then a finding of good cause for dispensing with notice and comment in accordance with 5 U.S.C. 553(b) must be included in the regulation. If the regulation is not published in the **Federal Register**, then any financial institution subject to the regulation must be named and personally served or otherwise given actual notice in accordance with 5 U.S.C. 553(b). If a financial institution is given notice of a reporting requirement by means other than publication in the **Federal Register**, the Secretary may prohibit disclosure of the existence or provisions of that reporting requirement to the designated FFA(s) and to any other party. *See* 31 C.F.R. 1010.360(a).

[8] 12 U.S.C. 3401 *et seq.*

[9] Public Law 104–13, 44 U.S.C. 3506(c)(2)(A).

• Propose for review and comment a future expansion of the scope of the PRA burden (the ''supplemental annual PRA burden'').

Frequency: As required.

Estimated Number of Respondents: 9 domestic financial institutions.[10]

Estimated Total Annual Responses: 84 responses.[11]

Estimated Recordkeeping Burden:

In Part 1, FinCEN proposes for review and comment a renewal of the estimate of the traditional annual PRA hourly burden, which includes a scope and methodology similar to that used in the past, with the incorporation of a more robust cost estimate. In the past, FinCEN estimated that, for one FFA request, it would take one financial institution five hours to report the required transactions as part of one response. The scope and methodology used in the past did not factor in that, as part of one FFA request, financial institutions may be asked to report on multiple prior (''backward-looking'') and future (''forward-looking'') transactions with a designated FFA. FinCEN assesses that the volume of reportable transactions, per financial institution and FFA request over a specified forward- and backward-looking period, along with the burden to implement a monitoring system for such transactions, would be the best indication of an annual hourly burden estimate per financial institution in the future. For that reason, in Part 2, FinCEN proposes for review and comment a methodology to estimate the hourly burden and the cost of a future estimate of a supplemental annual PRA burden that includes the burden and cost per financial institution, per FFA request of complying with forward and backward-looking reporting requirements. Finally, in Part 3, FinCEN solicits input from the public about: (a) The accuracy of the traditional annual PRA burden estimate; (b) the method proposed for the calculation of the future supplemental annual PRA burden; (c) the criteria, metrics, and most appropriate questions FinCEN should consider when researching the information to estimate the future traditional and supplemental annual PRA burden, according to the methodology proposed; and (d) any other comments about the regulations and the current and proposed future hourly burden and cost estimates of these requirements.

Part 1. Traditional Annual PRA Burden and Cost

Generally, the information required to be reported pursuant to an FFA regulation is basic information that a domestic financial institution would already maintain based on current BSA recordkeeping requirements. For example, a domestic financial institution sending or receiving transmittal orders (funds transfers) with a designated FFA would have access to the information required to be reported. The information required to be reported pursuant to an FFA regulation includes one or more of the following categories: (i) Checks or drafts; (ii) transmittal orders; (iii) loans; (iv) commercial paper; (v) stocks; (vi) bonds; and (vii) certificates of deposit. Although FFA requests may include any of these types of transactions, in general, over the past three years, FinCEN has only made requests associated with funds transfers.

As noted above, FinCEN will specify the form and method for reporting and typically provides a reporting schedule to each specified financial institution. If a specified financial institution does not have any reportable transactions, that information must be reported to FinCEN.

Because of the difficulty involved in estimating the (i) volume of reportable transactions per FFA request over a specified forward- and backward-looking period of time, and (ii) burden for a financial institution to implement a monitoring system to conduct such searches, FinCEN continues to estimate that reporting this information will take five hours on average for the traditional annual PRA burden. Additionally, the FFA information is typically reported by uploading a comma-separated value file spreadsheet through FinCEN's Secure Information Sharing System, which allows the filer to save an electronic version of the report and satisfy the recordkeeping requirement. FinCEN estimates that the recordkeeping requirement will take five minutes on average. Therefore, FinCEN estimates the total hourly reporting and recordkeeping burden for each FFA request is five hours and five minutes per response by a financial institution.[12]

FinCEN's estimate of the traditional annual PRA burden, therefore, is 427 hours, as detailed in Table 1 below:

TABLE 1—BURDEN ASSOCIATED WITH EACH PORTION OF THE TRADITIONAL ANNUAL PRA ESTIMATE

Action	Responses per year	Time per instance	Total hourly burden
A. Filing reports of certain transactions with designated FFAs	84 reports per year	5 hours	420
B. Complying with recordkeeping requirements in 31 CFR 1010.430	84 records per year	5 minutes	7
Total Hourly Burden			427

To calculate the hourly costs of the burden estimate, FinCEN identified six roles and corresponding staff positions involved in filing reports of certain transactions with designated FFAs: (i) General oversight (providing institution-level process approval); (ii) general supervision (providing process oversight); (iii) direct supervision (reviewing operational-level work and cross-checking all or a sample of the work product against supporting documentation); (iv) clerical work (engaging in research and administrative review, and recordkeeping); (v) legal

[10] Between 2019–2021, FinCEN sent FFA requests to an average of 9 financial institutions (5–13 financial institutions per request for an average of 9 financial institutions per request).

[11] Between 2019–2021, FinCEN sent a total of 4 requests to an average of 9 financial institutions, for a total average of 36 requests over three years. The requests asked for information on 1 to 12 FFAs per request, with an average of 6.5 (rounded up to 7) FFAs per request. 36 total average requests multiplied by 7 FFAs per request equals 252 responses over the course of 3 years. Therefore, the annual estimated number of responses is 252 responses divided by 3 years, which equals 84 responses annually.

[12] The scope and methodology used in 2014, when FinCEN had not yet issued regulations under this authority, estimated the number of respondents per year as 1. The estimated number of responses was also 1 with a reporting burden of 1 hour per respondent for a total annual burden of 1 hour. The 1 hour burden estimate was to keep the OMB control number effective. At the time, FinCEN noted that should it issue regulations under this authority, it would provide a burden estimate specific to those regulations. In 2016, following the issuance of a non-public regulation under this authority, FinCEN requested that OMB revise the number of respondents per year to 200, at 1 response per respondent, with a reporting burden of 5 hours per respondent, for a total annual burden of 1,000 hours. OMB issued a Notice of Action reflecting the revised burden hours on March 13, 2019.

compliance (ensuring the reporting process is in legal compliance); and (vi) computer support (ensuring feasibility of electronic submission and housing reports internally).

FinCEN calculated the fully-loaded hourly wage for each of these six roles by using the mean wage estimated by the U.S. Bureau of Labor Statistics (BLS),[13] and computing an additional benefits cost as follows:

TABLE 2—FULLY-LOADED HOURLY WAGE BY ROLE AND BLS JOB POSITION FOR ALL FINANCIAL INSTITUTIONS COVERED BY THIS NOTICE

Role	BLS-code	BLS-name	Mean hourly wage [14]	Benefit factor	Fully-loaded hourly wage
General oversight [15]	11–1010	Chief Executive [16]	$107.12	1.42	$152.11
General supervision	11–3031	Financial Manager	74.59	1.42	105.92
Direct supervision	13–1041	Compliance Officer	35.81	1.42	50.85
Clerical work (research, review, and recordkeeping).	43–3099	Financial Clerk	23.27	1.42	33.04
Legal compliance	23–1010	Lawyers and Judicial Law Clerks	85.66	1.42	121.64
Computer support	11–3021	Computer and Information Systems Managers.	77.77	1.42	110.43

FinCEN estimates that, *in general and on average,*[17] each role would spend different amounts of time on each portion of the traditional annual PRA burden, as follows:

For filing reports of certain transactions with designated FFAs, the cost of each burden hour is estimated to be $95.00, as shown in Table 3 below:

TABLE 3—EQUAL WEIGHTED AVERAGE HOURLY COST OF FILING REPORTS OF CERTAIN TRANSACTIONS WITH DESIGNATED FFAS

	% Time	Hourly cost
General Oversight	16.67	$25.35
General Supervision	16.67	17.65
Direct Supervision	16.67	8.48
Clerical Work	16.67	5.51
Legal Compliance	16.67	20.27
Computer Support	16.67	18.41
Equal Weighted Average Hourly Cost		95.67

* $95.67 rounded to $95.00.

The total estimated cost of the traditional annual PRA burden is $40,565 as reflected in Table 4 below:

TABLE 4—TOTAL COST OF TRADITIONAL ANNUAL PRA BURDEN

Steps	Hourly burden	Hourly cost	Total cost
Filing reports of certain transactions with designated FFAs (divided between the roles listed in Table 2)	[18] 420	[19] $95.00	$39,900
Complying with the recordkeeping requirements in 31 CFR 1010.430 (divided between the roles listed in Table 2)	[20] 7	[21] 95.00	665
Total cost			40,565

[13] The U.S. Bureau of Labor Statistics, May 2020 OEWS National Industry-Specific Occupational Employment and Wage Estimates (*bls.gov*). The most recent data from the BLS corresponds to May 2020. For the benefits component of total compensation, see U.S. Bureau of Labor Statistics, ''Table 9. Private industry workers, by major occupational group: employer costs per hour worked for employee compensation and costs as a percentage of total compensation'', available at Employer Costs for Employee Compensation Historical Tables—June 2021 (*bls.gov*). The ratio between benefits and wages for private industry workers is $10.83 (hourly benefits)/$25.80 (hourly wages) = 0.42, as of March 2021. The benefit factor is 1 plus the benefit/wages ratio, or 1.42. Multiplying each hourly wage by the benefit factor produces the fully-loaded hourly wage per position.

[14] For each occupation, FinCEN took the average of reported mean hourly wage across 9 affected financial industries (as measured at the most granular NAICS code available, whether at the 2, 3, 4 or 5 digit NAICS code; *see* the BLS May 2020 OEWS National Industry-Specific Occupational Employment and Wage Estimates (*bls.gov*)).

[15] General oversight may include board of directors/trustees approval.

[16] Chief executive officer is the highest paid category in the BLS Occupational Employment Statistics. For that reason, FinCEN is conservatively estimating the highest wage rate available for its cost analysis.

[17] By ''in general,'' FinCEN means without regard to outliers (*e.g.,* financial institutions with FFA reporting requirements with complexities that are uncommonly higher or lower than those of the population at large). By ''on average,'' FinCEN means the mean of the distribution of each subset of the population.

Part 2. Supplemental Annual PRA Burden

In the future, FinCEN intends to add a supplemental annual PRA burden calculation that will include the estimated hourly burden and cost to comply with forward- and backward-looking reporting requirements as part of filing reports of certain transactions with designated FFAs. This estimate will include the burden associated with implementing a monitoring system to identify such transactions.

During the period from 2019 to 2021, FFA regulations issued by FinCEN had a forward- and backward-looking reporting requirement. Specified financial institutions were required to report forward 90–180 days out from the effective date of the regulation (usually the date of issuance), and backward 14 months to five years prior to the effective date of the regulation. Specified financial institutions were required to file one report for certain backward-looking transactions, and a report every 30-days for certain forward-looking transactions. As a result, one FFA regulation could result in as many as 7 different reporting periods.[22] The majority of financial institutions combined the reportable transactions for all FFAs listed in one regulation [23] into a single report for each reporting period, thereby reducing the overall number of reports the financial institution might have otherwise provided.

As noted above, FinCEN assesses that the volume of reportable transactions per financial institution and FFA request, over a specified forward- and backward-looking period, along with the burden to implement a monitoring system for such transactions, would be the best indication of an annual hourly burden estimate in the future. FinCEN does not have the necessary information to provide a tentative estimate for these supplemental PRA hourly burdens and costs within the current notice. In addition, FinCEN does not have all the necessary information to precisely estimate the traditional annual PRA burden. For that reason, FinCEN is relying on estimates used in prior renewals of this OMB control number and the applicable regulations. FinCEN further recognizes that after receiving public comments as a result of this notice, future traditional annual PRA hourly burden and cost estimates may vary significantly. FinCEN intends to conduct more granular studies of the actions included in the proposed scope of the supplemental annual PRA burden in the near future to arrive at more precise estimates of net BSA hourly burden and cost.[24] The data obtained in these studies also may result in a significant variation of the estimated traditional annual PRA burden.

Estimated Recordkeeping Burden: The average estimated annual PRA burden, measured in hours per respondent, is five hours and five minutes (five burden hours to file reports of certain transactions with designated FFAs, and five minutes to comply with recordkeeping requirements).

Estimated Number of Respondents: 9, as noted above in Section II.

Estimated Total Annual Responses: 84 responses reporting on certain transactions with designated FFAs annually; and 84 instances of recordkeeping associated with these responses annually, as noted in Section II.

Estimated Total Annual Recordkeeping Burden: The estimated total annual PRA burden is 427 hours, as set out in Table 1.

Estimated Total Annual Recordkeeping Cost: The estimated total annual PRA cost is $40,565, as set out in Table 4.

An Agency may not conduct or sponsor, and a person is not required to respond to, a collection of information unless the collection of information displays a valid OMB control number. Records required to be retained under the BSA must be retained for five years.

Part 3. Request for Comments

(a) *Specific request for comments on the traditional annual PRA hourly burden and cost.*

FinCEN invites comments on any aspect of the traditional annual PRA burden, as set out in Part 1 of this notice. In particular, FinCEN seeks comments on the adequacy of: (i) FinCEN's assumptions underlying its estimate of the burden; (ii) the estimated number of hours required by each portion of the burden; and (iii) the organizational levels of the financial institution engaged in each portion of the burden, their estimated hourly remuneration, and the estimated proportion of participation by each role. FinCEN encourages commenters to include any publicly available sources for alternative estimates or methodologies.

(b) *Specific request for comments on the proposed criteria for determining the scope of a supplemental annual PRA hourly burden and cost estimate.*

FinCEN invites comments on any aspect of the criteria for a future estimate of the supplemental annual PRA burden, as set out in Part 2 of this notice.

(c) *Specific request for comments on the appropriate criteria, methodology, and questionnaire required to obtain information to more precisely estimate the supplemental annual PRA hourly burden and cost.*

FinCEN invites comments on the most appropriate and comprehensive means to question financial institutions about the annual hourly burden and cost attributable solely to complying with the regulations that require reports of transactions with designated FFAs.

The supplemental annual PRA hourly burden and cost estimate to comply with the regulations that require reports of transactions with designated FFAs must take into consideration only the effort involved in obtaining those data elements that are used exclusively for complying with requirements under 31 CFR 1010.360 and 31 CFR 1010.430, respectively. Given the complexity in determining what portion of the effort to include in the estimate, FinCEN seeks comments from the public regarding any questions we should consider posing in future notices, in addition to the specific questions for comment outlined directly below.

Specific Questions for Comments

- What is the burden to comply with requests for records issued under the FFA regulations (31 CFR 1010.360 and 31 CFR 1010.430)?
- How much time is spent on complying with the backward-looking requirements of an FFA request?
- How much time is spent on complying with the forward-looking requirements of an FFA request?
- Of the time spent on complying with backward- or forward-looking reporting requirements, what percentage

[18] See Table 1.

[19] See Table 3.

[20] See Table 1.

[21] See Table 3.

[22] 180 days divided into 30-day increments results in 6 forward-looking reports. Adding one backward-looking report gives a totals of 7 reports.

[23] Between 2019–2021, FinCEN issued regulations that asked for information on 1 to 12 FFAs.

[24] Net hourly burden and cost are the burden and cost a financial institution incurs to comply with requirements that are unique to the BSA, and that do not support any other business purpose or regulatory obligation of the financial institution. Burden for purposes of the PRA does not include the time and financial resources needed to comply with an information collection, if the time and resources are for things a business (or other person) does in the ordinary course of its activities if the agency demonstrates that the reporting activities needed to comply are usual and customary. 5 CFR 1320.3(b)(2). For example, a financial institution may be collecting and maintaining information on certain transactions with designated FFAs in order to satisfy other obligations including (i) protecting the financial institution from fraud against itself or its customers, or (ii) complying with other non-BSA regulatory requirements such as those imposed by the specific Federal functional regulator.

is spent by an employee with the role of general oversight? Of general supervision? Of direct supervision? Of clerical work? Of legal compliance? Of computer support?

• Are there employees with any other roles and corresponding staff positions involved in filing reports of certain transactions with designated FFAs?

• Does your financial institution typically report the data for requests that involve multiple designated FFAs in one report or multiple reports for each tranche of reporting?

• What challenges does your financial institution face or overcome in complying with FFA regulations?

• What can be done to improve transparency and communication as part of the FFA reporting process?

General Request for Comments

Comments submitted in response to this notice will be summarized and/or included in the request for OMB approval. All comments will become a matter of public record. Comments are invited on: (i) Whether the collection of information is necessary for the proper performance of the functions of the agency, including whether the information shall have practical utility; (ii) the accuracy of the agency's estimate of the burden of the collection of information; (iii) ways to enhance the quality, utility, and clarity of the information to be collected; (iv) ways to minimize the burden of the collection of information on respondents, including through the use of automated collection techniques or other forms of information technology; and (v) estimates of capital or start-up costs and costs of operation, maintenance, and purchase of services to provide information.

Himamauli Das,

Acting Director, Financial Crimes Enforcement Network.

[FR Doc. 2022–00332 Filed 1–10–22; 8:45 am]

BILLING CODE 4810–02–P

DEPARTMENT OF THE TREASURY

Internal Revenue Service

Proposed Extension of Information Collection Request Submitted for Public Comment; Comment Request for Form 5754

AGENCY: Internal Revenue Service (IRS), Treasury.

ACTION: Notice and request for comments.

SUMMARY: The Internal Revenue Service, as part of its continuing effort to reduce paperwork and respondent burden, invites the public and other Federal agencies to take this opportunity to comment on proposed and/or continuing information collections, as required by the Paperwork Reduction Act of 1995. Currently, the IRS is soliciting comments concerning Form 5754, *Statement by Person(s) Receiving Gambling Winnings.*

DATES: Written comments should be received on or before March 14, 2022 to be assured of consideration.

ADDRESSES: Written comments and recommendations for the proposed information collection should be sent within 60 days of publication of this notice to *omb.unit@irs.gov.* Please include, ''OMB Number: 1545–0239—Public Comment Request Notice'' in the Subject line. Requests for additional information or copies of this collection can be directed to Ronald J. Durbala, at *RJoseph.Durbala@irs.gov.*

SUPPLEMENTARY INFORMATION:

Title: Statement by Person(s) Receiving Gambling Winnings.

OMB Number: 1545–0239.

Project Number: Form 5754.

Abstract: Form 5754 is to be completed if you receive gambling winnings either for someone else or as a member of a group of winners on the same winning ticket. The information you provide on the form enables the payer of the winnings to prepare Form W–2G, *Certain Gambling Winnings,* for each winner to show the winnings taxable to each.

Current Actions: There is no change in the paperwork burden previously approved by OMB. This form is being submitted for renewal purposes only.

Type of Review: Extension of a currently approved collection.

Affected Public: Business or other for-profit organizations, individuals or households, and not-for-profit institutions.

Estimated Number of Respondents: 204,000.

Estimated Time per Respondent: 12 min.

Estimated Total Annual Burden Hours: 40,800.

The following paragraph applies to all the collections of information covered by this notice:

An agency may not conduct or sponsor, and a person is not required to respond to, a collection of information unless the collection of information displays a valid OMB control number.

Books or records relating to a collection of information must be retained if their contents may become material in the administration of any internal revenue law. Generally, tax returns and tax return information are confidential, as required by 26 U.S.C. 6103.

Desired Focus of Comments: The Internal Revenue Service (IRS) is particularly interested in comments that:

• Evaluate whether the proposed collection of information is necessary for the proper performance of the functions of the agency, including whether the information will have practical utility.

• Evaluate the accuracy of the agency's estimate of the burden of the proposed collection of information, including the validity of the methodology and assumptions used.

• Enhance the quality, utility, and clarity of the information to be collected; and

• Minimize the burden of the collection of information on those who are to respond, including using appropriate automated, electronic, mechanical, or other technological collection techniques or other forms of information technology, *e.g.,* by permitting electronic submissions of responses.

Comments submitted in response to this notice will be summarized and/or included in the ICR for OMB approval of the extension of the information collection; they will also become a matter of public record.

Approved: January 5, 2022.

Ronald J. Durbala,

IRS Tax Analyst.

[FR Doc. 2022–00335 Filed 1–10–22; 8:45 am]

BILLING CODE 4830–01–P

DEPARTMENT OF THE TREASURY

Internal Revenue Service

Proposed Extension of Information Collection Request Submitted for Public Comment; Comment Request for Form 5310–A

AGENCY: Internal Revenue Service (IRS), Treasury.

ACTION: Notice and request for comments.

SUMMARY: The Internal Revenue Service, as part of its continuing effort to reduce paperwork and respondent burden, invites the public and other Federal agencies to take this opportunity to comment on proposed and/or continuing information collections, as required by the Paperwork Reduction Act of 1995. Currently, the IRS is soliciting comments concerning Form 5310–A, *Notice of Plan Merger or Consolidation, Spinoff, or Transfer of*

Plan Assets or Liabilities, Notice of Qualified Separate Lines of Business.

DATES: Written comments should be received on or before March 14, 2022 to be assured of consideration.

ADDRESSES: Written comments and recommendations for the proposed information collection should be sent within 60 days of publication of this notice to *omb.unit@irs.gov.* Please include, ''OMB Number: 1545–1225—Public Comment Request Notice'' in the Subject line. Requests for additional information or copies of this collection can be directed to Ronald J. Durbala, at *RJoseph.Durbala@irs.gov.*

SUPPLEMENTARY INFORMATION:

Title: Notice of Plan Merger or Consolidation, Spinoff, or Transfer of Plan Assets or Liabilities, Notice of Qualified Separate Lines of Business.

OMB Number: 1545–1225.

Project Number: Form 5310–A.

Abstract: Internal Revenue Code section 6058(b) requires plan administrators to notify IRS of any plan mergers, consolidations, spinoffs, or transfers of plan assets or liabilities to another plan. Code section 414(r) requires employers to notify IRS of separate lines of business for their deferred compensation plans. Form 5310–A is used to make these notifications.

Current Actions: There is no change in the paperwork burden previously approved by OMB. This form is being submitted for renewal purposes only.

Type of Review: Extension of a currently approved collection.

Affected Public: Businesses and other for-profit organizations.

Estimated Number of Respondents: 694.

Estimated Time per Respondent: 10 hrs. 35 min.

Estimated Total Annual Burden Hours: 7,349.

The following paragraph applies to all the collections of information covered by this notice:

An agency may not conduct or sponsor, and a person is not required to respond to, a collection of information unless the collection of information displays a valid OMB control number.

Books or records relating to a collection of information must be retained if their contents may become material in the administration of any internal revenue law. Generally, tax returns and tax return information are confidential, as required by 26 U.S.C. 6103.

Desired Focus of Comments: The Internal Revenue Service (IRS) is particularly interested in comments that:

- Evaluate whether the proposed collection of information is necessary for the proper performance of the functions of the agency, including whether the information will have practical utility.
- Evaluate the accuracy of the agency's estimate of the burden of the proposed collection of information, including the validity of the methodology and assumptions used.
- Enhance the quality, utility, and clarity of the information to be collected; and
- Minimize the burden of the collection of information on those who are to respond, including using appropriate automated, electronic, mechanical, or other technological collection techniques or other forms of information technology, *e.g.,* by permitting electronic submissions of responses.

Comments submitted in response to this notice will be summarized and/or included in the ICR for OMB approval of the extension of the information collection; they will also become a matter of public record.

Approved: January 5, 2022.

Ronald J. Durbala,

IRS Tax Analyst.

[FR Doc. 2022–00330 Filed 1–10–22; 8:45 am]

BILLING CODE 4830–01–P

DEPARTMENT OF THE TREASURY

Internal Revenue Service

Proposed Extension of Information Collection Request Submitted for Public Comment; Comment Request for Form 1094–B and Form 1095–B

AGENCY: Internal Revenue Service (IRS), Treasury.

ACTION: Notice and request for comments.

SUMMARY: The Internal Revenue Service, as part of its continuing effort to reduce paperwork and respondent burden, invites the public and other Federal agencies to take this opportunity to comment on proposed and/or continuing information collections, as required by the Paperwork Reduction Act of 1995. Currently, the IRS is soliciting comments concerning Form 1094–B, *Transmittal of Health Coverage Information Returns* and Form 1095–B, *Health Coverage.*

DATES: Written comments should be received on or before March 14, 2022 to be assured of consideration.

ADDRESSES: Written comments and recommendations for the proposed information collection should be sent within 60 days of publication of this notice to *omb.unit@irs.gov.* Please include, ''OMB Number: 1545–2252—Public Comment Request Notice'' in the Subject line. Requests for additional information or copies of this collection can be directed to Ronald J. Durbala, at *RJoseph.Durbala@irs.gov.*

SUPPLEMENTARY INFORMATION:

Title: Reporting of health insurance coverage.

OMB Number: 1545–2252.

Project Number: TD 9660, Form 1094–B, and Form 1095–B.

Abstract: This collection covers final regulations providing guidance to providers of minimum essential health coverage that are subject to the information reporting requirements of section 6055 of the Internal Revenue Code. Section 6055 requires every person who provides minimum essential coverage to file returns reporting information for everyone for whom they provide minimum essential coverage. Form 1095–B, *Health Coverage,* was created for reporting this information. Form 1094–B, *Transmittal of Health Coverage Information Returns,* is used to transmit Form 1095–B.

Current Actions: There is no change in the paperwork burden previously approved by OMB. This form is being submitted for renewal purposes only.

Type of Review: Extension of a currently approved collection.

Affected Public: Business or other for-profit organizations, not-for-profit institutions, farms, and state, local, or tribal governments.

Estimated Number of Respondents: 125,030,000.

Estimated Time per Respondent: 11 min.

Estimated Total Annual Burden Hours: 2,088,333.

The following paragraph applies to all the collections of information covered by this notice:

An agency may not conduct or sponsor, and a person is not required to respond to, a collection of information unless the collection of information displays a valid OMB control number.

Books or records relating to a collection of information must be retained if their contents may become material in the administration of any internal revenue law. Generally, tax returns and tax return information are confidential, as required by 26 U.S.C. 6103.

Desired Focus of Comments: The Internal Revenue Service (IRS) is particularly interested in comments that:

- Evaluate whether the proposed collection of information is necessary

for the proper performance of the functions of the agency, including whether the information will have practical utility.

• Evaluate the accuracy of the agency's estimate of the burden of the proposed collection of information, including the validity of the methodology and assumptions used.

• Enhance the quality, utility, and clarity of the information to be collected; and

• Minimize the burden of the collection of information on those who are to respond, including using appropriate automated, electronic, mechanical, or other technological collection techniques or other forms of information technology, *e.g.,* by permitting electronic submissions of responses.

Comments submitted in response to this notice will be summarized and/or included in the ICR for OMB approval of the extension of the information collection; they will also become a matter of public record.

Approved: January 5, 2022.

Ronald J. Durbala,

IRS Tax Analyst.

[FR Doc. 2022–00338 Filed 1–10–22; 8:45 am]

BILLING CODE 4830–01–P

DEPARTMENT OF THE TREASURY

Agency Information Collection Activities; Submission for OMB Review; Comment Request; Form 1116, Foreign Tax Credit

AGENCY: Departmental Offices, U.S. Department of the Treasury.

ACTION: Notice.

SUMMARY: The Department of the Treasury will submit the following information collection requests to the Office of Management and Budget (OMB) for review and clearance in accordance with the Paperwork Reduction Act of 1995, on or after the date of publication of this notice. The public is invited to submit comments on these requests.

DATES: Comments should be received on or before February 10, 2022 to be assured of consideration.

ADDRESSES: Written comments and recommendations for the proposed information collection should be sent within 30 days of publication of this notice to *www.reginfo.gov/public/do/PRAMain.* Find this particular information collection by selecting ''Currently under 30-day Review—Open for Public Comments'' or by using the search function.

FOR FURTHER INFORMATION CONTACT: Copies of the submissions may be obtained from Spencer W. Clark by emailing *PRA@treasury.gov,* calling (202) 927–5331, or viewing the entire information collection request at *www.reginfo.gov.*

SUPPLEMENTARY INFORMATION:

Internal Revenue Service (IRS)

Title: Form 1116, Foreign Tax Credit.

OMB Control Number: 1545–0121.

Type of Review: Revision of a currently approved collection.

Description: Form 1116 and its schedules are used by individuals, estates, and trusts to claim a credit for certain taxes paid or accrued during the taxable year to a foreign country or a possession of the United States, subject to the limitations of IRC section 904. This information is used by the IRS to verify the foreign tax credit.

The IRS is adding Form 1116 Schedules B and C to assist taxpayers in complying with the changes made to the Internal Revenue Code by the Tax Cuts and Jobs Act, Public Law 115–97, and accurately report the required information to the IRS.

The information collection burden estimates associated with the filing of Form 1116 and its schedules by individuals are covered under OMB Control Number 1545–0074. This information collection request (ICR) reflects only the burdens associated with the filing of Form 1116 and its schedules by estates and trusts that are claiming the foreign tax credit.

Form: 1116.

Affected Public: Estates and Trusts.

Estimated Number of Respondents: 454,326.

Frequency of Response: Annually.

Estimated Total Number of Annual Responses: 454,326.

Estimated Time per Response: 5 hours, 34 minutes.

Estimated Total Annual Burden Hours: 2,531,600.

Authority: 44 U.S.C. 3501 et seq.

Dated: January 5, 2022.

Spencer W. Clark,

Treasury PRA Clearance Officer.

[FR Doc. 2022–00277 Filed 1–10–22; 8:45 am]

BILLING CODE 4830–01–P

DEPARTMENT OF VETERANS AFFAIRS

[OMB Control No. 2900–0208]

Agency Information Collection Activity Under OMB Review: VA Form 6298, Architect-Engineer Fee Proposal and VA Form 10101, Contractor Production Report

AGENCY: Office of Acquisition and Logistics, Department of Veterans Affairs.

ACTION: Notice.

SUMMARY: In compliance with the Paperwork Reduction Act (PRA) of 1995, this notice announces that the Office of Acquisition and Logistics (OAL), Department of Veterans Affairs, will submit the collection of information abstracted below to the Office of Management and Budget (OMB) for review and comment. The PRA submission describes the nature of the information collection and its expected cost and burden and includes the actual data collection instrument.

DATES: Written comments and recommendations for the proposed information collection should be sent within 30 days of publication of this notice to *www.reginfo.gov/public/do/PRAMain.* Find this particular information collection by selecting ''Currently under Review—Open for Public Comments'' or by using the search function. Refer to ''OMB Control No. 2900–0208.''

FOR FURTHER INFORMATION CONTACT: Maribel Aponte, Office of Enterprise and Integration, Data Governance Analytics (008), 1717 H Street NW, Washington, DC 20006, (202) 266–4688 or email *maribel.aponte@va.gov.* Please refer to ''OMB Control No. 2900–0208'' in any correspondence.

SUPPLEMENTARY INFORMATION:

Authority: Public Law 104–13; 44 U.S.C. 3501–3521.

Title: VA Form 6298, Architect-Engineer Fee Proposal and VA Form 10101, Contractor Production Report.

OMB Control Number: 2900–0208.

Type of Review: Extension of a currently approved collection.

Abstract: The Department of Veterans Affairs, Office of Construction and Facilities Management (CFM), manages a multi-million-dollar construction program that involves the design and construction of medical centers, and other VA facilities including building improvements and conversions. The actual construction work is contracted out to private construction firms. The use of VA Form 6298, Architect-Engineer Fee Proposal is mandatory for

obtaining the proposal and supporting cost or pricing data from the contractor and subcontractor in the negotiation of all architect-engineer contracts for design services when the contract price is estimated to be $50,000 or more. It is also used in obtaining proposals and supporting cost or pricing data for architect engineer services for research study, seismic study, master planning study, construction management and other related services contracts. VA Form 10101, Contractor Production Report, is used to record the data necessary to ensure the contractor provides sufficient labor and materials to accomplish the contract work. Contractors are required to guarantee the performance of the work necessary to complete the project. VAAR 852.236–79 details what needs to be addressed by the contractor on the Contractor Production Report. Failure to receive information from the Contractor Production Report could result in a claim for non-performance and construction delays against the Government if the Government were unable to collect this information to administer the contract.

An agency may not conduct or sponsor, and a person is not required to respond to a collection of information unless it displays a currently valid OMB control number. The **Federal Register** Notice with a 60-day comment period soliciting comments on this collection of information was published at 86 FR 60109 on October 29, 2021, page 60109.

Affected Public: Business or other for profit.

Estimated Annual Burden: 5,341 hours.

Estimated Average Burden per Respondent: 264 minutes.

Frequency of Response: More than quarterly.

Estimated Number of Respondents: 335.

By direction of the Secretary.

Maribel Aponte,

VA PRA Clearance Officer, Office of Enterprise and Integration, Data Governance Analytics, Department of Veterans Affairs.

[FR Doc. 2022–00296 Filed 1–10–22; 8:45 am]

BILLING CODE 8320–01–P

DEPARTMENT OF VETERANS AFFAIRS

[OMB Control No. 2900–XXXX]

Agency Information Collection Activity Under OMB Review: VA Form 26–0967, Certification Regarding Debarment, Suspension, Ineligibility and Voluntary Exclusion, and VA Form 26–0967a, Specially Adaptive Housing Assistive Technology Grants Criteria and Responses

AGENCY: Veterans Benefits Administration, Department of Veterans Affairs.

ACTION: Notice.

SUMMARY: In compliance with the Paperwork Reduction Act (PRA) of 1995, this notice announces that the Veterans Benefits Administration, Department of Veterans Affairs, will submit the collection of information abstracted below to the Office of Management and Budget (OMB) for review and comment. The PRA submission describes the nature of the information collection and its expected cost and burden and it includes the actual data collection instrument.

DATES: Written comments and recommendations for the proposed information collection should be sent within 30 days of publication of this notice to *www.reginfo.gov/public/do/PRAMain.* Find this particular information collection by selecting ''Currently under 30-day Review—Open for Public Comments'' or by using the search function. Refer to ''OMB Control No. 2900–XXXX.

FOR FURTHER INFORMATION CONTACT: Maribel Aponte, Office of Enterprise and Integration, Data Governance Analytics (008), 1717 H Street NW, Washington, DC 20006, (202) 266–4688 or email *maribel.aponte@va.gov.* Please refer to ''OMB Control No. 2900–XXXX'' in any correspondence.

SUPPLEMENTARY INFORMATION:

Authority: 44 U.S.C. 3501–21.

Title: Agency Information Collection Activity under OMB Review: VA Form 26–0967, Certification Regarding Debarment, Suspension, Ineligibility and Voluntary Exclusion, and VA Form 26–0967a, Specially Adaptive Housing Assistive Technology Grants Criteria and Responses.

OMB Control Number: 2900–XXXX.

Type of Review: New.

Abstract: The proposed regulations would require applicants to submit VA Form 26–0967, Certification Regarding Debarment, Suspension, Ineligibility and Voluntary Exclusion. These regulations would also require applicants to provide statements addressing six scoring criteria for grant awards as part of their application. The information will be used by Loan Guaranty personnel in deciding whether an applicant meets the requirements and satisfies the scoring criteria for award of an SAH Assistive Technology grant under 38 U.S.C. 2108. An agency may not conduct or sponsor, and a person is not required to respond to a collection of information unless it displays a currently valid OMB control number.

An agency may not conduct or sponsor, and a person is not required to respond to a collection of information unless it displays a currently valid OMB control number. The **Federal Register** Notice with a 60-day comment period soliciting comments on this collection of information was published at 86 FR No. 186 on September 29, 2021, page 54018.

Affected Public: Individuals or Households.

Estimated Annual Burden: 40.

Estimated Average Burden per Respondent: 2 hours.

Frequency of Response: One time.

Estimated Number of Respondents: 20.

By direction of the Secretary.

Maribel Aponte,

VA PRA Clearance Officer, Office of Enterprise and Integration, Data Governance Analytics, Department of Veterans Affairs.

[FR Doc. 2022–00283 Filed 1–10–22; 8:45 am]

BILLING CODE 8320–01–P

DEPARTMENT OF VETERANS AFFAIRS

[OMB Control No. 2900–0682]

Agency Information Collection Activity: Advertising, Sales, Enrollment Materials, and Candidate Handbooks

AGENCY: Veterans Benefits Administration, Department of Veterans Affairs.

ACTION: Notice.

SUMMARY: Veterans Benefits Administration, Department of Veterans Affairs (VA), is announcing an opportunity for public comment on the proposed collection of certain information by the agency. Under the Paperwork Reduction Act (PRA) of 1995, Federal agencies are required to publish notice in the **Federal Register** concerning each proposed collection of information, including each proposed revision of a currently approved collection, and allow 60 days for public comment in response to the notice.

DATES: Written comments and recommendations on the proposed collection of information should be received on or before March 14, 2022.

ADDRESSES: Submit written comments on the collection of information through Federal Docket Management System (FDMS) at *www.Regulations.gov* or to Nancy J. Kessinger, Veterans Benefits Administration (20M33), Department of Veterans Affairs, 810 Vermont Avenue NW, Washington, DC 20420 or email to *nancy.kessinger@va.gov.* Please refer to ''OMB Control No. 2900–0682'' in any correspondence. During the comment period, comments may be viewed online through FDMS.

FOR FURTHER INFORMATION CONTACT: Maribel Aponte, Office of Enterprise and Integration, Data Governance Analytics (008), 1717 H Street NW, Washington, DC 20006, (202) 266–4688 or email *maribel.aponte@va.gov.* Please refer to ''OMB Control No. 2900–0682'' in any correspondence.

SUPPLEMENTARY INFORMATION: Under the PRA of 1995, Federal agencies must obtain approval from the Office of Management and Budget (OMB) for each collection of information they conduct or sponsor. This request for comment is being made pursuant to Section 3506(c)(2)(A) of the PRA.

With respect to the following collection of information, VBA invites comments on: (1) Whether the proposed collection of information is necessary for the proper performance of VBA's functions, including whether the information will have practical utility; (2) the accuracy of VBA's estimate of the burden of the proposed collection of information; (3) ways to enhance the quality, utility, and clarity of the information to be collected; and (4) ways to minimize the burden of the collection of information on respondents, including through the use of automated collection techniques or the use of other forms of information technology.

Authority: 38 CFR 21.4252(h).

Title: Advertising, Sales, Enrollment Materials, and Candidate Handbooks.

OMB Control Number: 2900–0682.

Type of Review: Revision of a currently approved collection.

Abstract: This notice is replacing the previous 60-Day Notice, Vol. 86 No. 239 that was published on January 16, 2021. A Correction Notice was published in Vol. 87 No. 1 on January 3, 2022. The statute prohibits approval of the enrollment of a Veteran in a course if the educational institution uses advertising, sales, or enrollment practices that are erroneous, deceptive, or misleading either by actual statement, omission, or intimation. The advertising, sales and enrollment materials are reviewed to determine if the institution is in compliance with guidelines for approval. VA received two public comments which questions the 15-minute length of burden time needed to gather the information required for VA review upon compliance for this ICR. After careful assessment, VA agrees with the comments, and have therefore adjusted the time burden from 15 minutes to 60 minutes accordingly, and as result have updated the Supporting Statement to reflect the change.

Affected Public: Individuals and Households.

Estimated Annual Burden: 5,525 hours.

Estimated Average Burden per Respondent: 60 minutes.

Frequency of Response: Annually.

Estimated Number of Respondents: 5,525.

By direction of the Secretary:

Maribel Aponte,

VA PRA Clearance Officer, Office of Enterprise and Integration/Data Governance Analytics, Department of Veterans Affairs.

[FR Doc. 2022–00346 Filed 1–10–22; 8:45 am]

BILLING CODE 8320–01–P

FEDERAL REGISTER

Vol. 87 Tuesday,

No. 7 January 11, 2022

Part II

Department of Energy

Federal Energy Regulatory Commission

18 CFR Part 12

Safety of Water Power Projects and Project Works; Final Rule

DEPARTMENT OF ENERGY

Federal Energy Regulatory Commission

18 CFR Part 12

[Docket No. RM20–9–000; Order No. 880]

Safety of Water Power Projects and Project Works

AGENCY: Federal Energy Regulatory Commission.

ACTION: Final rule.

SUMMARY: In this final rule, the Federal Energy Regulatory Commission (Commission) is amending its regulations governing the safety of hydroelectric projects licensed by the Commission under the Federal Power Act. These regulations will promote the safe operation, effective maintenance, and efficient repair of licensed hydroelectric projects and project works to ensure the protection of life, health, and property in surrounding communities. Specifically, the Commission is revising its regulations to: incorporate two tiers of project safety inspections by independent consultants, codify existing guidance requiring certain licensees to develop an owner's dam safety program and a public safety plan, update existing regulations related to public safety incident reporting, and make various minor revisions.

DATES: The rule is effective April 11, 2022.

FOR FURTHER INFORMATION CONTACT:

Ken Fearon (Technical Information), Office of Energy Projects, Federal Energy Regulatory Commission, 888 First Street NE, Washington, DC 20426, (202) 502–6015, *kenneth.fearon@ferc.gov*

Doug Boyer (Technical Information), Office of Energy Projects, Federal Energy Regulatory Commission, 805 SW Broadway, Suite 550, Portland, OR 97205, (503) 552–2709, *douglas.boyer@ferc.gov*

Tara DiJohn (Legal Information), Office of the General Counsel, Federal Energy Regulatory Commission, 888 First Street NE, Washington, DC 20426, (202) 502–8671, *tara.dijohn@ferc.gov*

SUPPLEMENTARY INFORMATION:

Table of Contents

	Paragraph Nos.
I. Background	4
II. Notice of Proposed Rulemaking	14
III. Engineering Guidelines	15
IV. Discussion	16
A. Review, Inspection, and Assessment by Independent Consultants	23
B. Owner's Dam Safety Program	100
C. Public Safety and Miscellaneous Updates	119
V. Regulatory Requirements	143
A. Information Collection Statement	143
B. Environmental Analysis	184
C. Regulatory Flexibility Act	185
D. Document Availability	194
E. Effective Date and Congressional Notification	197

Order No. 880

Final Rule

(Issued December 16, 2021)

1. The Federal Energy Regulatory Commission (Commission or FERC), under Part I of the Federal Power Act (FPA), licenses hydroelectric projects that are developed by non-Federal entities including individuals, private entities, Indian Tribes, states, municipalities, electric cooperatives, and others. Under section 10(c) of the FPA, the licensee of any hydroelectric project under the jurisdiction of the Commission must conform to ''such rules and regulations as the Commission may from time to time prescribe for the protection of life, health, and property.'' [1]

2. Since early 2017, the Commission has solicited, received, and reviewed expert opinions on the structure and implementation of the Commission's dam safety program, particularly the provisions for independent consultants' safety inspections required under part 12, subpart D of the Commission's regulations.[2] These independent consultant safety inspections, commonly referred to as part 12 inspections, are facilitated by licensees and are in addition to the dam safety inspections conducted by Commission staff.

3. To address expert recommendations on the part 12 inspection process, and to codify guidance issued by the Commission's Office of Energy Projects, Division of Dam Safety and Inspections (D2SI) over the past several years, the Commission is revising its dam safety regulations found in Title 18, part 12 of the Code of Federal Regulations. In this final rule, the Commission is revising part 12 by replacing subpart D in its entirety, adding new subpart F, and making minor revisions to subparts A, B, C, and E, as further described below.

I. Background

4. Section 10(c) of the FPA requires licensees, in pertinent part, to ''maintain the project works in a condition of repair adequate . . . for the efficient operation of said works in the development and transmission of power,'' to ''make all necessary renewals and replacements,'' and to ''conform to such rules and regulations as the Commission may from time to time prescribe for the protection of life, health, and property.'' [3]

5. Pursuant to FPA section 10(c), on December 27, 1965, the Commission's predecessor agency, the Federal Power Commission (FPC), in Order No. 315, promulgated regulations that require licensees to provide complete safety inspections of licensed water power project works by independent consultants at five-year intervals, or more frequently if necessary.[4] Order No. 315 was intended to supplement D2SI staff's inspections of project works with detailed periodic inspections overseen by an independent consultant.[5]

6. On January 21, 1981, the Commission issued Order No. 122 to consolidate the Commission's orders, regulations, and practices relating to

[1] 16 U.S.C. 803(c).

[2] 18 CFR pt. 12 (2021).

[3] 16 U.S.C. 803(c).

[4] *Hydroelectric Licensed Projects—Inspections to Insure Safe Operation,* Order No. 315, 34 FPC 1551 (1965).

[5] *Id.*

project safety under part 12 of the Commission's rules and to revise the existing project safety inspection regulations.[6] The Commission's rules related to independent consultant safety inspections have not been substantially revised or amended since 1981.

7. To ensure that the Commission's dam safety program remains current with the evolving nature of the dam safety field, D2SI staff issues, and periodically updates, *Engineering Guidelines for the Evaluation of Hydropower Projects* (Engineering Guidelines).[7] D2SI staff has also augmented the part 12 inspection process over the years by adding additional inspection components (*e.g.,* the Potential Failure Mode Analysis, the Supporting Technical Information Document, and the Dam Safety Surveillance and Monitoring Program and Report).

8. In June 2002, D2SI began a licensee pilot program for conducting a Potential Failure Mode Analysis[8] as a component of a part 12 inspection and issued for comment a draft Chapter 14 of the Engineering Guidelines, which would guide licensees in performing this type of dam safety analysis. In April 2003, D2SI issued a final Chapter 14 of the Engineering Guidelines and required a Potential Failure Mode Analysis to be performed during all part 12 inspections. Consistent with this requirement, licensees have conducted over a thousand Potential Failure Mode Analyses. The Commission is codifying the Potential Failure Mode Analysis as part of the scope of a part 12 inspection, specifically during a comprehensive assessment and typically at a 10-year interval.

9. On December 14, 2005, the upper reservoir of the Taum Sauk Hydroelectric Project No. 2277, a pumped storage project, was overtopped during the final pumping cycle, causing a breach of the upper reservoir which released over 1 billion gallons of water, resulting in personal injury and significant environmental and property damage.[9] Following the December 2005 failure of Taum Sauk Dam, D2SI began requiring licensees to develop and maintain an Owner's Dam Safety Program, with the goal of ensuring that licensees have a robust and focused dam safety program to protect public safety, the environment, and project facilities. In August 2012, D2SI staff required all owners of high and significant hazard potential dams[10] to submit an Owner's Dam Safety Program.[11] The Commission is codifying this requirement by adding a new subpart F to the Commission's part 12 regulations.

10. On February 7, 2017, high flows in the Feather River basin caused the water level in the Feather River Hydroelectric Project No. 2100 reservoir to rise at Oroville Dam and, for the first time in project history, flow down the emergency spillway, resulting in extensive erosion and damage to Oroville Dam's main spillway and emergency spillway area.[12] This event precipitated the evacuation of nearly 188,000 residents from the town of Oroville and from other downstream communities north of Sacramento, California. Following the February 2017 Oroville Dam spillway incident, the Commission required the project licensee, California Department of Water Resources (California DWR), to convene a team of independent, third-party consultants to complete a forensic analysis to determine the cause of the incident.[13] The Oroville Independent Forensic Team Report documented the team's findings, conclusions, and recommendations.[14] Several of the Oroville Independent Forensic Team's observations related to potential areas for improvement in the Commission's dam safety program, particularly the part 12 inspection process.

11. Separately, the Commission convened a FERC After Action Panel to review and evaluate the Commission's dam safety program in the months following the Oroville Dam spillway incident. The D2SI Director's mandate to the FERC After Action Panel was to: ''review project documents and history for Oroville Dam . . . .;'' ''review the performance of the FERC dam safety program at the Oroville Dam Project, which includes both work and actions by FERC staff, and the program requirements on the dam owner, such as the [p]art 12 process, the [Potential Failure Mode Analyses] process, the Instrumentation and Monitoring Program, and Owners Dam Safety Program . . . .;'' ''make conclusions regarding any shortcomings in the FERC dam safety program implementation at Oroville Dam;'' and if shortcomings are identified, recommend ''improvement or changes to the FERC dam safety program to ensure that future incidents like Oroville can be avoided.'' [15]

12. The FERC After Action Panel Report documented several shortcomings of the Commission's dam safety program with respect to its implementation at the Oroville Dam Project, and recommended several improvements to the part 12 inspection process that could increase the likelihood that design and operational deficiencies are detected in advance of a major incident.

13. In light of the Oroville Independent Forensic Team Report and the FERC After Action Panel Report findings, the desire to codify existing dam safety guidance, and the Commission's authority under FPA section 10(c) to promulgate rules protecting life, health, and property, the Commission is revising its part 12 dam safety regulations, as discussed further below.[16]

[6] *Water Power Projects and Project Works Safety,* Order No. 122, 46 FR 9029 (Jan. 28, 1981), FERC Stats. & Regs. ¶ 30,225 (1981) (cross-referenced at 14 FERC ¶ 61,041).

[7] D2SI's Engineering Guidelines are available on the Commission's website at *https://www.ferc.gov/industries-data/hydropower/dam-safety-and-inspections/eng-guidelines.*

[8] A Potential Failure Mode Analysis is a method to evaluate the various ways a dam and its components could possibly fail. Generally, this involves identifying possible failure scenarios and evaluating those factors that could make the failure mode scenario more or less likely to occur. Next, the significance of each potential failure mode is determined and a prioritized plan is developed to address the most significant potential failure modes.

[9] More information about the Taum Sauk Dam Breach Incident can be found on the Commission's website at *https://www.ferc.gov/industries-data/hydropower/dam-safety-and-inspections/taum-sauk-pumped-storage-project-p-2277-dam.*

[10] Hazard potential is a classification based on the potential consequences in the event of failure or misoperation of the dam, canal, or water conveyance, and is subdivided into categories (*e.g.,* Low, Significant, High). High hazard potential generally indicates that failure or misoperation of the project work will probably cause loss of human life. Significant hazard potential and low hazard potential generally indicate that failure or misoperation will probably not cause loss of human life but may have some amount of economic, environmental, or other consequences. Hazard classifications are based solely on the consequences of dam failure and do not in any way reflect the condition of the rated dams.

[11] *See* Commission staff's August 15, 2012 letter to owners of high and significant hazard potential dams, *https://www.ferc.gov/sites/default/files/2020-04/letter-submit-odsp.pdf.*

[12] More information about the Oroville Dam spillway incident can be found on the Commission's website at *https://cms.ferc.gov/industries-data/hydropower/dam-safety-and-inspections/oroville-dam-service-spillway-p-2100.*

[13] *See* Commission staff's letter to California DWR regarding the emergency repair and board of consultants for Oroville Dam spillway, Project No. 2100 (Feb. 13, 2017), *https://cms.ferc.gov/sites/default/files/2020-04/Orovilledam.pdf.*

[14] Independent Forensic Team Report, Oroville Dam Spillway Incident (Jan. 5, 2018), *https://damsafety.org/content/oroville-independent-forensic-team-releases-final-investigative-report.*

[15] *See* FERC After Action Panel Assessment of Oroville Spillway Incident Causes and Recommendations to Improve Effectiveness of the FERC Dam Safety Program (Nov. 23, 2018), *https://www.ferc.gov/sites/default/files/2020-04/reportdamsafety.pdf.*

[16] The May 2020 failures of the Edenville and Sanford Dams in Michigan have resulted in substantial hardship and economic damage. A forensic investigation is being undertaken to understand the root causes of those failures. The NOPR was substantially complete prior to the

Continued

II. Notice of Proposed Rulemaking

14. On July 16, 2020, the Commission issued a Notice of Proposed Rulemaking proposing to revise its part 12 regulations to incorporate two tiers of independent consultant safety inspections, codify existing guidance on developing owner's dam safety programs and public safety plans, modify public safety incident reporting requirements, and make various minor revisions throughout part 12.[17] The Commission received 16 comment letters in response to the NOPR.[18] Comments were submitted by licensees and individuals, some as part of submissions from trade associations, including the National Hydropower Association (NHA) and the Dam Safety Interest Group of CEATI International (CEATI).[19] The Commission has considered all comments in formulating the final rule.

III. Engineering Guidelines

15. The Commission is also in the process of updating its Engineering Guidelines by adding new Chapters 15 through 18. On July 16, 2020, concurrently with issuance of the NOPR, the Commission solicited public review and comment by issuing the new guidelines in draft format in four separate advisory dockets accessible on the Commission's eLibrary website. Chapter 15, in Docket No. AD20–20–000, provides licensee guidance for developing and maintaining a Supporting Technical Information Document.[20] Chapter 16, in Docket No. AD20–21–000, provides licensee guidance on the scope of the part 12D independent consultant inspection program. Chapter 17, in Docket No. AD20–22–000, provides licensee guidance for conducting a Potential Failure Mode Analysis. Chapter 18, in Docket No. AD20–23–000, provides licensee guidance for conducting a Level 2 Risk Analysis. Entities that filed comments on the draft chapters included: Licensees, consultants, and other individuals through trade and other professional societies including the United States Society on Dams, NHA, and CEATI. The U.S. Army Corps of Engineers (Corps) also submitted comments. The Commission has considered all comments in finalizing Chapters 15 through 18 of the Engineering Guidelines. The final versions of these chapters are available on the FERC Division of Dam Safety and Inspections website.[21]

IV. Discussion

16. As explained in the NOPR, the Commission evaluated potential revisions to its part 12 regulations by considering the findings of the Oroville Independent Forensic Team and FERC After Action Panel; reviewing the inspection practices of other Federal agencies responsible for ensuring the safety of a large number of dams, including those of the Bureau of Reclamation (Reclamation)[22] and the Corps;[23] and reviewing the Federal Emergency Management Agency's (FEMA) *Federal Guidelines for Dam Safety*.[24]

17. In addition to making various minor revisions and updates to our part 12 regulations, this final rule accomplishes four overarching objectives that are integral to strengthening the Commission's dam safety program and addressing shortcomings identified by the forensic investigations that followed the Oroville Dam spillway incident. First, the final rule implements two tiers of part 12 independent consultant safety inspections, in addition to Commission staff's regular inspections. The two-tier structure includes two types of inspections: a comprehensive assessment and a periodic inspection. Each type of inspection will be performed at a 10-year interval, with the periodic inspection occurring midway between comprehensive assessments. The two-tier inspection structure retains the current five-year interval between part 12 inspections and mirrors FEMA's recommendation that formal inspections be conducted at intervals not to exceed five years.[25] The alternating two-tier structure is similar to those used by Reclamation and the Corps. Because the existing five-year interval between part 12 inspections remains the same, the revised regulations do not increase the likelihood that undiscovered safety issues will persist for longer periods of time. The comprehensive assessment requires a more in-depth review than the current part 12 inspection, formally incorporates the existing Potential Failure Mode Analysis process, and requires a semi-quantitative risk analysis, as recommended by the Oroville Independent Forensic Team and FERC After Action Panel. The periodic inspection is narrower in scope than the current part 12 inspection and focuses primarily on the performance of project works between comprehensive assessments.

18. Second, the final rule changes the process by which D2SI reviews and evaluates the qualifications of independent consultants that conduct part 12 inspections. Currently, § 12.34 of the Commission's regulations requires the licensee to submit to the Director of D2SI for approval a resume describing the independent consultant's experience.[26] FEMA recommends that ''the inspection team should be chosen on a site-specific basis considering the nature and type of dam . . . [and] should comprise individuals having appropriate specialized knowledge in structural, mechanical, electrical, hydraulic, and embankment design; geology; concrete materials; and construction procedures.'' [27]

19. Accordingly, the process adopted in the final rule requires licensees to submit to the Director of D2SI an independent consultant team proposal,

Michigan dam failures and was not intended to address any findings or recommendations that may result from the forensic investigation. The Commission will review the findings once the investigation is complete.

[17] *Safety of Water Power Projects and Project Works,* 85 FR 45,032 (July 24, 2020), 172 FERC ¶ 61,061 (2020) (NOPR).

[18] The following entities filed comments on the NOPR: Central Nebraska Public Power and Irrigation District; Wisconsin Power and Light Company; Alaska Electric Light and Power Company; Copper Valley Electric Association; City of North Little Rock Electric; Alaska Power Association; National Hydropower Association; United States Society on Dams; CEATI International, Dam Safety Interest Group; American Association for Laboratory Accreditation; Hydropower Reform Coalition; Sierra Club; Michigan Department of Environment, Great Lakes, and Energy; Schnabel Engineering, Inc.; David L. Mathews; and U.S. Senator Lisa Murkowski. Some of these comments, such as those filed by American Association for Laboratory Accreditation, Hydropower Reform Coalition, and Sierra Club, raise issues that are outside the scope of this rulemaking proceeding and are not addressed further in this final rule.

[19] NHA and NextEra Energy Resources, LLC, each filed motions to intervene in Docket No. RM20–9–000. Intervention is not necessary in order to request rehearing of a rulemaking. *See, e.g., Limiting Authorizations to Proceed with Construction Activities Pending Rehearing,* Order No. 871–B, 86 FR 26150 (May 13, 2021), 175 FERC ¶ 61,098, at n.14 (2021). Accordingly, these motions are unnecessary.

[20] As explained in Chapter 15 of the Engineering Guidelines, the Supporting Technical Information Document is a ''living'' document that serves as a compendium of existing project information, including information about a project's design, construction history, operating procedures, and engineering analyses.

[21] Available at *https://www.ferc.gov/industries-data/hydropower/dam-safety-and-inspections/eng-guidelines.*

[22] Reclamation, *Review/Examination Program for High and Significant Hazard Dams* (Sept. 2018), *https://www.usbr.gov/recman/fac/fac01-07.pdf.*

[23] Corps, *Safety of Dams—Policy and Procedures* (Mar. 2014), *https://www.publications.usace.army.mil/Portals/76/Publications/EngineerRegulations/ER_1110-2-1156.pdf.*

[24] FEMA, *Federal Guidelines for Dam Safety* (Apr. 2004), *https://www.fema.gov/sites/default/files/2020-08/fema_dam-safety_P-93.pdf* (FEMA Dam Safety Guidelines).

[25] *Id.* at 42.

[26] 18 CFR 12.34.

[27] FEMA Dam Safety Guidelines at 42.

comprising one or more independent consultants and additional engineering or scientific personnel, as needed, which must demonstrate that the members of that team possess an appropriate level of expertise for the specific project under consideration. This change reflects the reality that, for many of the projects under the Commission's jurisdiction, a single independent consultant will not possess the appropriate degree and diversity of technical proficiency necessary to evaluate all aspects of the project. The current requirement that an independent consultant be a licensed professional engineer with a minimum of 10 years' experience in ''dam design and construction and in the investigation of the safety of existing dams'' is retained, but will apply only to the designated independent consultants, and not to other supporting members of the independent consultant team.[28]

20. Third, the final rule codifies existing guidance related to the Owner's Dam Safety Program. Currently, the Commission's part 12 regulations do not explicitly require a licensee to develop an Owner's Dam Safety Program. However, § 12.4 of our existing regulations provides that the Commission may require an applicant or licensee to submit reports or information on any condition affecting the safety of the project.[29] Since the initial request for an Owner's Dam Safety Program in August 2012,[30] approximately 250 have been developed by licensees and submitted to the Commission. This final rule codifies the requirement that licensees of one or more high or significant hazard potential dams [31] must prepare, maintain, file with the Commission, and periodically review and update an Owner's Dam Safety Program. Licensees must designate a person responsible for overseeing day-to-day implementation of the dam safety program.

21. Fourth, the final rule modifies licensee reporting and preparedness requirements related to public safety at or near hydroelectric projects. Currently, licensees are required to install and maintain public safety devices and to report deaths or serious injuries at their projects.[32] The final rule revises the definition of a ''project-related'' incident to clarify that licensees are required to report those public safety incidents that are related to project operation; to report rescues in addition to deaths and serious injuries; and to prepare, maintain, and submit a public safety plan to D2SI, which is the current practice required by existing D2SI guidance.

22. A section-by-section analysis, describing the proposal set forth in the NOPR, the comments received on the NOPR, and the Commission's determinations, follows.

A. Review, Inspection, and Assessment by Independent Consultants

23. In response to the findings and recommendations in the Oroville Independent Forensic Team Report and FERC After Action Panel Report, the Commission is revising its regulations under 18 CFR part 12, subpart D, to enhance the program for independent consultant inspections. The regulations adopted here will replace existing subpart D in its entirety. Due to the final rule's implementation of two tiers of part 12 inspections (periodic inspections and comprehensive assessments), subpart D will now include §§ 12.30 through 12.42, which results in changes to the numbering of subpart E (existing §§ 12.40 through 12.44 will become §§ 12.50 through 12.54).

1. Section 12.30—Applicability

24. Section 12.30 establishes the applicability of subpart D's independent consultant inspection requirement and identifies three conditions that result in a project being subject to the provisions of subpart D. Subpart D currently applies to any project development that has a dam: (1) Greater than a specified height; (2) with an impoundment exceeding a specific gross storage capacity; or (3) that has a high hazard potential and is determined by the Regional Engineer to require inspection by an independent consultant. Although the subpart D regulations could be interpreted as only applying to dams, D2SI has in practice applied the requirements of this subpart to those portions of canals and penstocks judged to have a high hazard potential and this rule adopts that interpretation.

25. The NOPR proposed revisions to § 12.30 to align subpart D's applicability with existing D2SI practices and to make clear that the provisions of subpart D apply to project works other than dams and could apply to projects that do not have a dam. Specifically, the Commission proposed revisions to § 12.30 to clarify that while the existing height and storage thresholds apply only to project developments with a dam, the high hazard potential criterion applies to all project works (*i.e.,* if any portion of a project work has a high hazard potential, the project development would be subject to subpart D). Additionally, as revised, subpart D would apply to a project development if the Regional Engineer or other Commission representative determines that an inspection is required for reasons not listed. For example, the Regional Engineer may conclude that an independent consultant inspection is warranted for a project that is otherwise not subject to subpart D where the dam or other project work poses significant safety concerns.

26. Certain commenters suggested that further distinction should be made to distinguish the requirements for low hazard potential works and high hazard potential works within a licensed project development that is subject to part 12.[33] NHA also suggested that recreational access to project lands should be excluded from the consideration of the hazard potential or that the applicability of this revision should be narrowed.[34] CEATI asked for clarity regarding who is considered an ''other authorized Commission representative'' as that term is used in § 12.30(c).[35]

27. All project works function as a system. Even low hazard potential project works have the potential to adversely impact high hazard potential works; therefore, as has been D2SI's current practice, low hazard potential works of projects meeting the applicability provisions of § 12.30 must also meet the requirements of subpart D. This is not a change from the interpretation of the existing regulations, but rather a clarification. Regarding the second comment, as is current practice in evaluating downstream hazard potential, high usage areas of any type, including recreational areas, should be considered in determining hazard potential.[36] Last, § 12.30(c)'s use of the term ''other authorized Commission representative'' is consistent with § 12.3(b)(3), which defines ''authorized Commission representative'' as the Director of the Office of Energy Projects, the Director of D2SI, the Regional Engineer, or any

[28] 18 CFR 12.31(a).

[29] 18 CFR 12.4(b)(2)(ii)(B).

[30] *See supra* P 9.

[31] *See supra* note 10 (defining high hazard and significant hazard potentials).

[32] *See* 18 CFR 12.10(b) (death or serious injury reporting) and 12.42 (warning and safety devices).

[33] *See, e.g.,* CEATI's September 9, 2021 Comments at 5 (CEATI Comments); NHA's September 22, 2021 Comments at 4 (NHA Comments).

[34] *See* NHA Comments at 4.

[35] CEATI Comments at 5.

[36] *See* FEMA Dam Safety Guidelines *supra* note 24. Consistent with FEMA guidance, high usage areas of any type should be considered appropriately in evaluating hazard potential and it has been D2SI's practice to consider the implications of recreation use on hazard potential.

other member of the Commission staff whom the Commission may specifically designate. Apart from updating cross references within part 12 and a minor clarifying edit, no substantive revisions were made to this section following the NOPR.

2. Section 12.31—Definitions

28. Current § 12.31 defines ''independent consultant,'' ''high hazard potential,'' ''height above streambed,'' and ''gross storage capacity'' for the purposes of the provisions of subpart D. Section 12.31 also provides the D2SI Director the authority to grant a waiver from the 10-year experience requirement in the definition of independent consultant.

29. The NOPR proposed revisions to § 12.31 to update the definition of an ''independent consultant'' and to add definitions for the terms ''independent consultant team,'' ''periodic inspection,'' and ''comprehensive assessment.''

30. Our regulations currently define ''independent consultant'' as a licensed professional engineer, with at least ten years of experience and expertise related to dams, who is not, and has not been within two years, an employee of the licensee or its affiliates or an agent acting on behalf of the licensee. As proposed in the NOPR, the revised definition of ''independent consultant'' would retain the licensure and 10-year experience requirements. However, the restrictions regarding the professional relationship between the independent consultant and licensee would be separated into three separate elements, requiring that an independent consultant: (1) Is not an employee of the licensee or its affiliates; (2) has not been an employee of the licensee or its affiliates within two years prior to performing a periodic inspection or comprehensive assessment; and (3) has not been an agent acting on behalf of the licensee or its affiliates before performing services under this part.[37] The NOPR explained that the Commission intends to narrowly apply this restriction, with a primary goal of ensuring that independent consultants are not responsible for reviewing work to which they contributed substantially.

31. The NOPR also proposed to define ''independent consultant team'' as comprising one or more independent consultants and additional engineering and scientific personnel, as needed. Collectively, the independent consultant team must have expertise commensurate with the scale, complexity, and relevant technical disciplines of the project and type of review being performed (periodic inspection or comprehensive assessment). As the NOPR explained, this approach ensures that each inspection and review is conducted by qualified personnel such that the Commission can reasonably expect that potential issues relating to project safety or stability will be identified. The Commission intends to place greater emphasis on the qualifications of the personnel on an independent consultant team, and their collective experience and expertise, for comprehensive assessments compared to periodic inspections; projects with higher consequences or total project risk; projects with a greater number of, or more technically diverse or challenging, project works; and projects with a history of unusual or adverse performance. Currently, § 12.34 requires licensees to submit resumes for independent consultants for Commission approval. As further discussed below, the final rule revises § 12.34 to require licensees to submit an independent consultant team proposal for the Director of D2SI's approval.

32. Commenters requested clarification of the definition of an independent consultant team and asked that the 10-year experience requirement be limited to just the independent consultant and not the entire team.[38] Some commenters expressed general concern about the relatively limited pool of qualified independent consultants,[39] and that the provisions on independence might disqualify those who have performed prior work on the project.[40] CEATI recommended that the reference to qualified dam design and construction personnel should be broadened to include other critical project works such as penstocks, gates, and other structures.[41]

33. Based on the comments received, we revised the definition of independent consultant team to clarify that the ten-year experience requirement applies only to the independent consultant and does *not* apply to the additional independent consultant team members. The final rule requires that an independent consultant team must include at least one independent consultant, as defined in paragraph (a) of this section, and that supporting team members must meet the requirements of paragraphs (a)(3) through (a)(5) of this section regarding the professional relationship between the team member and the licensee. In addition, former paragraph (i) regarding the granting of a waiver of the 10-year requirement was relocated to § 12.34 for clarity.

34. In response to the general concerns about the limited pool of qualified independent consultants or team members, the restrictions listed in paragraphs (a)(3) through (a)(5) are designed to ensure that independent consultants and team members are not responsible for reviewing work to which they substantially contributed. This limiting provision is essential in ensuring independence of the independent consultant and independent consultant teams.[42] Examples of what constitutes independence is provided in Chapter 16 of the Engineering Guidelines.[43] This provision clarifies previous guidance and practice and in staff's opinion will not reduce the pool of independent consultants performing this work. On the contrary, the inclusion of independent consultant team members provides more opportunity to develop the experience of more junior professionals to be qualified as future independent consultants. ''Appurtenances'' has been added to the required expertise of the independent

[37] Because the circumstances will vary and require evaluation by Commission staff on a case-by-case basis, the definition proposed in the NOPR and adopted in this final rule does not attempt to set specific thresholds for scope or duration of services. Chapter 16 of the guidelines provides examples of the type of information Commission staff will consider when making these determinations.

[38] *See, e.g.,* NHA Comments at 4; CEATI Comments at 6; Central Nebraska Public Power and Irrigation District's September 22, 2020 Comments at 1–2 (Central Nebraska Comments).

[39] *See, e.g.,* NHA Comments at 4; CEATI Comments at 6; Central Nebraska Comments at 1–2; Wisconsin Power and Light Company's September 18, 2020 Comments at 5–7 (Wisconsin Power Comments).

[40] *See, e.g.,* NHA Comments at 4; CEATI Comments at 6; Wisconsin Power Comments at 6.

[41] *See* CEATI Comments at 7.

[42] CEATI asks whether a licensee may appeal a determination under § 12.31(a)(5) of a possible conflict of interest based on an independent consultant's prior work on a project. CEATI Comments at 6. As explained in Chapter 16 of the Engineering Guidelines, if there is a situation that could disqualify an independent consultant or team member under § 12.31(a)(5), it is the licensee's responsibility to demonstrate in the inspection plan that any potential conflict of interest will be avoided. In any event, any staff action is subject to a request for rehearing, see 18 CFR 385.1902(a), although it is unclear to what extent we would entertain such an interlocutory matter.

[43] With respect to the limitation in § 12.31(a)(5) that an independent consultant has not been ''an agent acting on behalf of the licensee or its affiliates,'' we do not find it necessary to define the term ''agent'' as some commenters suggest. *See* NHA Comments at 5; CEATI Comments at 6. The term agent is commonly used to refer to a person with authority to act on another's behalf. As we have explained, the purpose of the limitation is to ensure the independent consultant's independence. Chapter 16 of the Engineering Guidelines provides example scenarios and guidance to help licensees navigate the independent consultant approval process.

consultant team to broaden the experience of the team beyond that of just the dam.

35. The NOPR proposed and the final rule updates the definition of ''hazard potential'' to ensure consistency with FEMA's Hazard Potential Classification System for Dams,[44] and relocates the definition of ''high hazard potential'' to § 12.3(b)(13)(i).[45] The updated definition applies to dams, canals, and other water conveyances, or any portion thereof. The final rule further defines ''significant hazard potential'' and ''low hazard potential classifications'' in §§ 12.3(b)(ii) and (iii).

36. The NOPR also proposed and the final rule in § 12.31 includes definitions for ''periodic inspection'' and ''comprehensive assessment.'' No further revisions were made to this section following the NOPR.

3. Section 12.32—General Inspection Requirement

37. Existing § 12.32 requires that an independent consultant perform a periodic inspection of the project works of each development,[46] subject to the provisions of subpart D.

38. The NOPR proposed to retain the general requirement that an independent consultant inspection be performed, to revise § 12.32 to incorporate the terms ''periodic inspection'' and ''comprehensive assessment,'' and to require the filing of a report following each type of inspection. The NOPR also proposed to relocate the general requirement to file an inspection report from existing § 12.37 to revised § 12.32.

39. Commenters requested that ''generating equipment'' be added to the list of project works excluded from inspections and further clarity be provided to distinguish between the inspection requirements for high hazard potential and low hazard potential project works.[47] Generating equipment is a critical element in the passage and discharge of water through a powerhouse. Because the failure of generating equipment to pass discharge can result in operational and life safety concerns, it is imperative that generating equipment be inspected for mechanical reliability and operational concerns. Therefore, we decline to revise § 12.32 to add generating equipment to the list of project works excluded from inspections. The subject of inspection requirements for high and low hazard potential project works is discussed in § 12.30 above. No revisions to the section were made based on this comment. The final rule eliminates two general references to the Engineering Guidelines from this section and adds a sentence to clarify that the licensee must ensure that the independent consultant team's report complies with all the requirements set forth in subpart D.

4. Section 12.33—Exemption

40. Existing § 12.33 grants the Director of D2SI the authority to exempt projects from the provisions of subpart D for good cause and provides an example of what may constitute good cause. At the Director of D2SI's discretion, the exemption may be granted in perpetuity or may require periodic reevaluation of the exemption justification (*e.g.,* by reviewing and confirming that the project has a low hazard potential).

41. The NOPR, which in § 12.33(a) retained the Director of D2SI's authority to exempt projects from subpart D, proposed revisions to § 12.33(b) to update the example of good cause to include canals and other water conveyances. In addition, the NOPR proposed in § 12.33(c) to rescind any exemption from subpart D that was issued prior to the effective date of this rule. Existing subpart D exemptions have been granted over several decades and, as the state of the practice of dam safety has evolved, have not been reconsidered consistently. For this reason, the NOPR contemplated that an entity desiring a continued exemption would be required to reapply to ensure that any justification for a subpart D exemption is reviewed based on the current state of the practice, considering potential failure modes, consequences, and total project risk.

42. NHA requested that the Commission reconsider rescinding all previously approved exemptions from the requirements of subpart D.[48]

43. Based on the comments received and after further consideration, the blanket rescission of all previously approved exemptions has been removed from the regulations. Instead, we have revised § 12.33 to clarify that the Director of D2SI, for good cause shown, may rescind a previously approved exemption from the requirements of subpart D. This determination will be made on a case-by-case basis. In addition, for future exemption requests, the Director of D2SI may require the licensee to complete a comprehensive assessment prior to considering the exemption request.

5. Section 12.34—Approval of Independent Consultant Team

44. Prior to performing an inspection, existing § 12.34 requires a licensee to submit for the Director of the Office of Energy Projects' approval a detailed resume for an independent consultant. In the NOPR, the Commission proposed several revisions to § 12.34 to address concerns raised in the Oroville Independent Forensic Team report, the FERC After Action Panel Report, and issues related to implementation of the existing rule over the past several years.[49]

45. In § 12.34(a), the NOPR proposed to require licensees to obtain written approval of the independent consultant team, from the Director of D2SI instead of the Director of the Office of Energy Projects, prior to performing a periodic inspection or comprehensive assessment. While in practice D2SI has granted approval of independent consultants prior to inspections, the regulation as currently written does not stipulate that D2SI approval must be obtained.

46. As proposed in the NOPR, § 12.34(b) would require licensees to submit a detailed independent consultant team proposal to the Director of D2SI at least 180 days prior to performing a periodic inspection or comprehensive assessment. This involves two primary changes. As we explained in the NOPR, while the current text of § 12.34(b) requires licensees to submit an independent consultant's detailed resume 60 days in advance, increasing the submittal time to 180 days in advance does not represent a change in practice. D2SI staff routinely issues reminder letters to licensees approximately 18 months in advance of any inspection required under subpart D, and for several years has requested that independent consultants' resumes be submitted six months in advance to ensure that all parties are aware of their roles and responsibilities, and have sufficient time to prepare for the inspection. The

[44] *See* FEMA, *Federal Guidelines for Dam Safety: Hazard Potential Classification System for Dams* (Apr. 2004), *https://www.ferc.gov/sites/default/files/2020-04/fema-333.pdf* (FEMA Hazard Potential Classification System).

[45] *See infra* P 123.

[46] Development means that part of a project comprising an impoundment and its associated dams, forebays, water conveyance facilities, power plants, and other appurtenant facilities. A project may comprise one or more developments. 18 CFR 12.3(b)(7).

[47] *See* NHA Comments at 5–6.

[48] NHA Comments at 6.

[49] In particular, the improvements to the independent consultant team approval process include: broadening the composition of independent consultant team members to include representation from varied technical disciplines; ensuring thorough review of project works by qualified individuals with the appropriate technical disciplines; and performing comprehensive reviews of the original project design, construction, and subsequent performance.

final rule codifies D2SI's current practice.

47. Second, existing § 12.34 requires that resumes be submitted only for any independent consultant, to demonstrate that they meet the requirements provided in § 12.31. In the NOPR, we proposed revisions to § 12.34(b) directing licensees to submit documentation of the experience and qualifications for all members of the independent consultant team, including one or more independent consultants and additional contributing members, as needed. This change will allow Commission staff to more fully evaluate the independent consultant team's experience and ensure it is commensurate to the scale, complexity, and technical disciplines of the project and type of review being performed. The Commission intends to require a higher level of experience and expertise for a comprehensive assessment than a periodic inspection, due to the broader scope of the comprehensive assessment.

48. The NOPR proposed changes to § 12.34(c) that would permit the Director of D2SI to disapprove of an independent consultant team member, regardless of demonstrated experience and qualifications, for good cause, such as having a report rejected by the Commission within the preceding five years. This provision allows the Commission to ensure that independent consultants' inspections are performed by qualified parties.

49. In response to the NOPR, commenters requested further clarity on: (1) The independent consultant team proposal information that should be provided in the inspection plan; (2) grounds for disapproval of an independent consultant; and (3) the timing for submitting the inspection plan.[50]

50. Based on comments received, the final rule further revises § 12.34 to:

- Clarify that the independent consultant team proposal must identify the technical disciplines and level of expertise required to perform the inspection and show that each member of the independent consultant team who is not designated as an independent consultant meets the requirements of § 12.31(a)(3) through (5);
- clarify that the D2SI Director may disapprove an individual who is identified as the independent consultant in the independent consultant team proposal, and that grounds for disapproval may include rejection by the Commission of one or more reports on an inspection under this subpart within the preceding five years;
- clarify that the 180-day timing is measured from the scheduled date of the field inspection or other designated activity such as a Potential Failure Mode Analysis or risk analysis;
- add a requirement that the independent consultant team proposal clearly delineate team members' roles and responsibilities to ensure no team member will be responsible for reviewing and evaluating their own previous work on the project;
- add a requirement that if required information about any supporting team member is not available at the time of the independent consultant team proposal, the missing information must be included in the preliminary report required by § 12.42;
- clarify that written approval of the facilitator(s) of the Potential Failure Mode Analysis or risk analysis must also be obtained; and
- relocate information on granting of a waiver of the 10-year requirement from § 12.32 to § 12.34 for clarity.

6. Section 12.35—Periodic Inspection

51. Existing § 12.35 establishes the scope of the independent consultant's inspection. In the NOPR, the Commission proposed to revise § 12.35 in its entirety such that it establishes the scope of a periodic inspection, the less intensive of the two tiers of part 12 inspections.

52. The final rule adopts this change. As revised, § 12.35 establishes the scope of a periodic inspection, which includes review of prior reports, a field inspection, review of the surveillance and monitoring plan and data, and review of dam and public safety programs. A periodic inspection has a reduced scope compared to the existing independent consultant's inspection.

53. In response to the NOPR, commenters recommended: broadening the scope of the periodic inspection to include a review of the Supporting Technical Information Document;[51] adding a review of security protocols of the operating system to the inspection;[52] eliminating the requirement that the independent consultant team must have a full understanding of all the project works;[53] and deleting the requirement for the team to inspect all accessible project works with no consideration for the risk/hazard potential of the project work.[54]

54. Adding a review of the Supporting Technical Information Document would provide little benefit to the periodic inspection and would result in increased burden and cost. Adding a review of the security protocols is outside the scope of a periodic inspection and would be best handled separately by others with specialized experience. For these reasons, neither recommendation was incorporated into the scope of a periodic inspection.

55. Eliminating the requirement for the independent consultant team to have a full understanding of the project works would negate the team's ability to adequately understand the technical and operational aspects of the project and therefore be unable to provide meaningful observations, conclusions, and recommendations from the inspection. Limiting the inspection to only those project works that are considered high risk or high hazard would be subjective, could overlook project works whose potential hazard or risk could change over time, and would result in an incomplete inspection and assessment of the project works. The final rule adds a sentence to § 12.35(a) to clarify that it is the licensee's responsibility to provide to the independent consultant team all information and reports necessary to fulfill the requirements of this section. In addition, a few minor revisions for clarity were made to this proposed section following the NOPR.[55]

7. Section 12.36—Report on Periodic Inspection

56. Existing § 12.36 deals with emergency corrective measures. As discussed further below,[56] the NOPR proposed to combine the requirements for emergency corrective measures contained in existing § 12.36 and the requirements for corrective measures after the report as outlined in existing § 12.39 under a single ''corrective measures'' heading in § 12.41.

57. As proposed in the NOPR, new § 12.36 establishes the requirements for the periodic inspection report, which serves a similar purpose to existing § 12.37 (report of the independent consultant) with several notable changes. Existing § 12.37(b) currently requires initial reports filed under subpart D to include general project information (*e.g.,* project descriptions, maps, design summary information, geologic information) and allows licensees to incorporate by reference existing information and analyses contained in previously-prepared independent consultant reports (existing § 12.37(b)(2)). The final rule eliminates

[50] *See, e.g.,* NHA Comments at 7; CEATI Comments at 8–9.

[51] *See* NHA Comments at 7.

[52] *See* CEATI Comments at 10.

[53] *See id.*

[54] *See* NHA Comments at 7.

[55] Section 12.35(a), which requires the independent consultant team to review prior reports ''to have, at the time of the periodic inspection, a full understanding of the . . . downstream hazard . . . of the project works'' was revised to add ''*upstream and* downstream hazard.'' Section 12.35(d)(3), addressing review of dam and public safety programs, was revised to specify review of ''*public* access restrictions.''

[56] *See infra* PP 93–96.

the practice of differentiating between initial and subsequent reports and will require every periodic inspection report to meet the same standard, without relying on the practice of incorporating by reference information or analyses contained in earlier reports.

58. Section 12.36(b) of the final rule lists specific evaluations that must be documented in a periodic inspection report. These pertain to the surveillance, monitoring, and performance of the project, with a focus on whether any potential failure modes, previously identified or not, are active, developing, or warrant further evaluation at the time of the periodic inspection.

59. As proposed in the NOPR, the final rule eliminates the provisions that previously allowed independent consultants to incorporate the previous independent consultant's report by reference and document only information that has changed since the previous report. Section 12.36(c) provides a list of items which require a status update and an evaluation of any changes since the previous inspection.

60. Existing provisions in §§ 12.37(c)(4) through (8) are retained in §§ 12.36(d) through (h) with minor changes to ensure consistency with other revisions.

61. In response to the NOPR, commenters sought clarity on the independent consultant team's review and assessment of previous engineering analyses and reports.[57] Specifically, commenters questioned whether independent consultants may, after reviewing previous reports, conclude that they concur with the analyses and results and that the content of the previous reports need not be recreated. In addition, certain commenters, such as CEATI and Central Nebraska, advocated for the removal of paragraph (b)(5)(iii), which would require the independent consultant team to review the adequacy of the Owner's Dam Safety Program.[58] Central Nebraska and NHA reiterated similar concerns with respect to the independent consultant team's review of the Public Safety Plan, noting that the review should be limited to the licensee's compliance with the plan rather than a review of the plan's adequacy.[59]

62. In reviewing and assessing previous engineering analyses and reports, the independent consultant team's summary must not simply state that the team agrees with the report findings, but instead must provide a clear rationale or basis for why the team agrees with the report findings. The independent consultant team's review of the Owner's Dam Safety Program, a required component of the periodic inspection (as well as the comprehensive assessment) is not the same as the external audit of the Owner's Dam Safety Program described in § 12.65.[60] For the purposes of the periodic inspection or comprehensive assessment, the Owner's Dam Safety Program review is intended to provide the independent consultant team an opportunity to provide their observations and findings from their interactions with the licensee staff (*e.g.,* managers, dam safety engineers, and operators) related to the licensee's implementation of and compliance with its Owner's Dam Safety Program at the particular project being inspected.[61] The same is true of the independent consultant team's review of the Public Safety Plan. The final rule revises this section to specify that the report must be sealed with a professional engineer's seal (§ 12.36(h)), to delete informational references to the Engineering Guidelines, and to incorporate other minor edits. No other substantive revisions were made to this proposed section following the NOPR.

8. Section 12.37—Comprehensive Assessment

63. Existing § 12.37 establishes requirements for independent consultant-prepared reports. As discussed elsewhere in this final rule, the revisions to §§ 12.36 and 12.38 incorporate this information for reports on periodic inspections and comprehensive assessments, respectively.

64. Section 12.37 of the final rule establishes the scope of a comprehensive assessment, the more intensive of the two tiers of part 12 inspection. As many components of the comprehensive assessment are identical to or build upon the periodic inspection, several paragraphs of this section cross-reference the corresponding periodic inspection requirements in § 12.35.

65. In addition to those elements required for a periodic inspection set forth in § 12.35, a comprehensive assessment must include a review of prior reports and analyses of record, a review of the Supporting Technical Information Document, a Potential Failure Mode Analysis, and a risk analysis. A comprehensive assessment has an expanded scope compared to the existing independent consultant's inspection. Section 12.37(a)(2) requires the independent consultant team to perform a more detailed review of existing documentation, including as-built drawings, monitoring data, and analyses of record, than required by the current independent consultant's inspection.

66. Section 12.37(f) requires a comprehensive assessment to include a Potential Failure Mode Analysis, which is already standard practice for part 12 inspections. D2SI has developed draft Chapter 17 of the Engineering Guidelines, which describes how to conduct a Potential Failure Mode Analysis. As discussed above, the Commission has solicited and received public comments on draft Chapter 17 in Docket No. AD20–22–00.[62] The final version of Chapter 17 is available on the FERC Division of Dam Safety and Inspections website.[63]

67. Section 12.37(g) incorporates a semi-quantitative risk analysis as part of the scope of a comprehensive assessment. Other Federal agencies, including Reclamation, the Corps, and the Tennessee Valley Authority, have incorporated this type of analysis into their systematic comprehensive dam safety reviews. FEMA also provides recommendations and guidance for the performance of semi-quantitative risk analysis.[64] D2SI developed draft Chapter 18 of the Engineering Guidelines to provide guidance describing the process of, and procedures for performing, a semi-quantitative risk analysis. As discussed above, the Commission has solicited

[57] *See, e.g.,* CEATI Comments at 10; Central Nebraska Comments at 2.

[58] *See* CEATI Comments at 11; Central Nebraska Comments at 2; *see also* NHA Comments at 7 (expressing concern that the scope of the periodic inspection includes review of the Owner's Dam Safety Plan and Public Safety Plan).

[59] *See* Central Nebraska Comments at 2; NHA Comments at 7.

[60] The purpose of the external audit or peer review is to provide a holistic review of the Owner's Dam Safety Program by evaluating its efficacy across the owner's portfolio of projects to which the program applies. This review is to be conducted every five years and should focus on the owner's corporate program for dam safety, including, but not limited to, communication, training, and organizational structure and risk reduction strategies intended to foster a strong dam safety culture within the owner's organization as a whole.

[61] NHA suggests that requiring review of the Owner's Dam Safety Program as part of the periodic inspection ''could create significant exposure to liability for an [independent consultant] who is highly qualified with respect to the technical and operational aspects of the project, but not with respect to evaluating organizational programs and effectiveness.'' NHA Comments at 7. However, in Commission staff's experience this has not been an issue.

[62] *See supra* P 15.

[63] *See supra* note 21.

[64] FEMA, *Federal Guidelines for Dam Safety Risk Management* (Jan. 2015), *https://www.fema.gov/sites/default/files/2020-08/fema_dam-safety_risk-management_P-1025.pdf.*

and received public comments on draft Chapter 18 in Docket No. AD20–23–00.[65] The final version of Chapter 18 is available on the FERC Division of Dam Safety and Inspections website.[66]

68. Section 12.37(g) permits the Regional Engineer to waive the requirement that a comprehensive assessment must include performance of a risk analysis. This waiver provision allows the Commission to focus its efforts on projects that present greater risk to life, health, and property, and provides flexibility for D2SI staff to gradually phase in the risk analysis component of a comprehensive assessment, allowing sufficient time for D2SI staff to develop and deliver training on the risk analysis procedures to D2SI staff, licensees, and consultants. It also can provide regulatory relief to licensees, where appropriate.

69. In response to the NOPR, commenters requested clarity on performing a Potential Failure Mode Analysis,[67] questioned the appropriateness of requiring a risk analysis as part of a comprehensive assessment for owners with a small number of dams,[68] and commented on the scope and cost to perform a risk analysis.[69]

70. As more fully described in the Engineering Guidelines, the Potential Failure Mode Analysis is a process used to identify, describe, and evaluate the credibility and significance of potential failure modes.[70] A Potential Failure Mode Analysis is the first step in conducting a risk analysis, which evaluates significance from a risk perspective by categorizing potential failure modes by likelihood and consequence in an effort to prioritize dam safety activities. Chapters 17 and 18 of the Engineering Guidelines provide procedural guidance for performing a Potential Failure Mode Analysis and a risk analysis for a comprehensive assessment, respectively.

71. As to concerns about requiring a risk analysis as part of a comprehensive assessment for owners with a small portfolio of dams, risk is not a function of the number of dams an entity owns. Moreover, the scope of the risk analysis has been designed so that it may be tailored to specific project conditions. The guidance in Chapter 18 of the Engineering Guidelines provides for a scalable approach to performing the risk analysis depending on the type, complexity, and size of the project works. Larger and more complex project works will generally take more effort to analyze than projects with smaller and less complex works. The appropriate scope of a risk analysis, as well as associated costs for performing such analysis, have been carefully considered to provide only that level of effort needed to obtain the information necessary to prioritize risk measures. The final rule adds a sentence to § 12.37(a) to clarify that it is the licensee's responsibility to provide to the independent consultant team all information, reports, and analyses of record necessary to fulfill the requirements of this section and deletes informational references to the Engineering Guidelines. No other substantive revisions were made to proposed § 12.37 following the NOPR.

9. Section 12.38—Report on Comprehensive Assessment

72. Existing § 12.38 describes the timeline for submitting reports on an independent consultant's inspection. These requirements are relocated to § 12.40, discussed below.

73. As proposed in the NOPR, § 12.38 of the final rule establishes the requirements for the report on a comprehensive assessment. As with the corresponding section regarding a report on a periodic inspection, the Commission is eliminating the difference between initial and subsequent reports and will require every comprehensive assessment report to meet the same standard.

74. Section 12.38(b) references § 12.36(b) and identifies additional items that require specific evaluation in the comprehensive assessment report. In addition to those elements required for a periodic inspection, a comprehensive assessment report must include an evaluation of: Spillway adequacy; the potential for internal erosion and/or piping of embankments, foundations, and abutments; structural integrity and stability of all structures under credible loading conditions; any other analyses of record pertaining to geology, seismicity, hydrology, hydraulics, or project safety; and the Supporting Technical Information Document, Potential Failure Mode Analysis, and risk analysis. An evaluation of an analysis of record must include an evaluation of the accuracy, relevance, and consistency with the current state of the practice of dam engineering, and the comprehensive assessment report must include clear documentation of the independent consultant team's rationale. If the independent consultant team is unable to review any analysis of record or disagrees with the analysis of record in any way, the independent consultant must recommend new analyses.

75. In the NOPR, the Commission also proposed to eliminate provisions that allow independent consultants to incorporate the previous independent consultant's report by reference and document only that information that has changed since the previous report. By referencing the periodic inspection report requirements (§ 12.36(c)) (*i.e.,* report on periodic inspection), § 12.38(c) requires the independent consultant to provide, across seven categories, a status update and evaluation of any changes since the previous inspection.

76. The existing provisions in §§ 12.37(c)(4) through (8) are retained in §§ 12.38(d) through (h) of the final rule with minor changes to ensure consistency with other revisions adopted herein.

77. In response to the NOPR, commenters requested clarity on appropriate actions to take when the analyses of record are unavailable.[71]

78. Section 12.38(c)(3) requires the independent consultant to provide recommendations to perform new analyses if the analyses of record are not available to be reviewed. It is incumbent on licensees to either locate the analysis of record or provide a plan and schedule to complete a new analysis. Additional guidance on reviewing and evaluating the analyses of record and how that information should be documented and classified is provided in Chapter 16 of the Engineering Guidelines. As discussed above, the Commission has solicited and received public comments on draft Chapter 16 in Docket No. AD20–21–00.[72] The final version of Chapter 16 is available on the FERC Division of Dam Safety and Inspections website.[73] Apart from eliminating informational references to the Engineering Guidelines, no substantive revisions were made to proposed § 12.38 following the NOPR.

[65] *See supra* P 15.

[66] *See supra* note 21.

[67] *See, e.g.,* NHA Comments at 10; CEATI Comments at 11.

[68] *See* CEATI Comments at 11.

[69] *See, e.g.,* NHA Comments at 10; CEATI Comments at 11.

[70] Chapter 17 of the Engineering Guidelines explains that a potential failure mode is a way that failure could occur and defines failure, for the purposes of the potential failure mode analysis, as an uncontrolled release of the reservoir, in whole or in part; the inability of project works or components to perform their intended function; or project works or components performing in an impaired or compromised fashion; any of which results in an adverse consequence.

[71] *See, e.g.,* NHA Comments at 10; CEATI Comments at 12.

[72] *See supra* P 15.

[73] *See supra* note 21.

10. Section 12.39—Evaluation of Spillway Adequacy

79. Existing § 12.39 describes the process for taking corrective measures after the independent consultant's report is filed with the Regional Engineer. As proposed in the NOPR, this procedure is relocated to § 12.41, discussed below. The requirement to evaluate spillway adequacy is an existing component of the part 12 inspection and is currently found in § 12.35(b) of our regulations. However, providing this information in a standalone section will highlight the importance of evaluating spillway adequacy. Accordingly, the final rule relocates the requirement to evaluate spillway adequacy to § 12.39.

80. As proposed in the NOPR, § 12.39 of the final rule would expand the existing requirements for evaluating spillway adequacy to address scenarios similar to the 2017 Oroville Dam spillway incident. When assessing spillway adequacy, independent consultants must evaluate the potential for misoperation of, failure to operate, blockage of, or debilitating damage to, a spillway, and the resulting effects on the maximum reservoir level and the potential for overtopping.

81. In response to the NOPR, NHA requested clarity on how the hydraulic adequacy evaluations will be consistently implemented and whether the credible loading conditions are standards based or risk based.[74] Central Nebraska expressed concerns that § 12.39 could result in ''efforts that could be overly broad and lead[] to the review or assumption of unreasonable levels of unlikelihood,'' and suggested instead that spillway performance be evaluated through the Potential Failure Mode Analysis process.[75]

82. The evaluation of spillway adequacy has been a longstanding assessment requirement of subpart D independent consultant inspections. The final rule requires the independent consultant as part of the spillway adequacy assessment to consider specific conditions that could limit or impact spillway discharge. Commission staff will monitor and review how these conditions are assessed and provide additional guidance on the assessment process, if needed, on a case-by-case basis. In response to NHA's question about appropriate flood loading conditions, paragraph (a) has been revised to clarify that floods up to and including the probable maximum flood must be considered in the evaluation. In addition, we have deleted the word ''structural'' from paragraphs (a) and (b) to clarify that failures could be more than structural failures and eliminated from this section an informational reference to the Engineering Guidelines.

11. Section 12.40—Time for Inspections and Reports

83. This final rule relocates the provisions regarding timelines for performing independent consultant inspections and submitting inspection reports, previously found in § 12.38, to revised § 12.40. Our existing rules maintain a five-year cycle for inspections and include provisions for initial inspections of existing licensed projects, projects licensed but not yet constructed, and all other projects; include a separate set of provisions related to projects inspected by an independent consultant prior to March 1, 1981; and authorize the Regional Engineer to grant extensions of time to file an independent consultant's inspection report.

84. Section 12.40 revises the timeline for submitting reports on inspections by independent consultants. While the current five-year interval between inspections and reports is maintained, the inspections will alternate between periodic inspections and comprehensive assessments; thus, there is a ten-year interval between any pair of consecutive comprehensive assessments or periodic inspections, but a significant project review every five years.

85. Section 12.40(a) consolidates the timing of inspections and reports for projects previously inspected by an independent consultant. Section 12.40(a)(1) maintains the five-year cycle for an independent consultant's inspection of each project development. Section 12.40(a)(2) grants the Regional Engineer the authority to require that any report due 18 months after the effective date of the final rule be either a comprehensive assessment or periodic inspection, enabling D2SI to balance the number of comprehensive assessments due each year over the 10-year cycle. Section 12.40(a)(3) requires that the first comprehensive assessment be completed, and the report on it filed, by December 31, 2038.[76]

86. Section 12.40(b) retains and updates the terminology related to existing provisions for existing licensed projects previously inspected, projects licensed but not yet constructed, and other projects.

87. Section 12.40(c) establishes the ten-year interval between comprehensive assessments and requires that a periodic inspection be performed within five years following a comprehensive assessment.

88. Sections 12.40(d) and 12.40(e) allow the Regional Engineer to extend the time to file an independent consultant's report, for good cause shown, and to require that any inspection scheduled to be performed be a periodic inspection or comprehensive assessment. For example, where a project is scheduled for a periodic inspection but a dam safety incident, extreme loading condition (*e.g.,* unprecedented flood, large earthquake, etc.), or other significant change in condition has occurred since the previous comprehensive assessment, the Regional Engineer may require that the project undergo a comprehensive assessment rather than a periodic inspection. Alternatively, for projects that have no life safety consequences and a low total project risk, the Regional Engineer may allow comprehensive assessments to be performed at an interval greater than every 10 years.

89. In response to the NOPR, commenters recommend changing the effective date to 18 months following the date of the final rule,[77] extending the due date for projects not previously inspected under Part 12 from two years to three years,[78] limiting the Regional Engineer's ability to unilaterally change the type of report to be filed,[79] and further clarifying the purpose of the preliminary report.[80]

90. Section 12.40(a)(2) has been revised to reflect that the date for a report to be filed under this subpart will be 18 months after the effective date of the final rule. Commission staff has evaluated the scope of the effort required to complete a comprehensive assessment and is confident that two years is sufficient time to complete this work and file a report. Extending this work effort over a three-year duration would provide no benefits and could negatively impact the process by extending the time between the review

[74] *See* NHA Comments at 10–11.

[75] Central Nebraska Comments at 2.

[76] This date is based on an anticipated final rule effective date in early 2022 with a corresponding first report due 18 months later in late 2023. A four-year phased implementation period (2024 through 2027) is assumed to attain full annual implementation. Full implementation should be complete after a full 10-year cycle (2027–2036). An additional two years (2037 and 2038) are provided for possible extension of time requests and any other reports that may have been delayed from the phased implementation period.

[77] *See* CEATI Comments at 13.

[78] *See id.*

[79] *See, e.g.,* NHA Comments at 11; CEATI Comments at 13.

[80] *See, e.g.,* NHA Comments at 11; CEATI Comments at 13.

of project information; conducting the inspections and performing Potential Failure Mode Analysis and semi-quantitative risk analysis meetings; and preparing the report, thus prolonging the period before corrective action could be identified and implemented. Section 12.40(e) was revised to include ''for good cause'' for the Regional Engineer to change the type of report due.

91. The purpose of the preliminary report is to demonstrate whether the independent consultant team has adequately prepared for their inspection, including the review of background material and instrumentation data. This requirement is intended to help the independent consultant team identify areas in the field that may require additional attention or effort.

92. In the NOPR, the Commission proposed to include information about the preliminary report in § 12.40(f). However, because that section covers different material, the final rule relocates the preliminary report requirement to § 12.42, which is a new, standalone section.

12. Section 12.41—Corrective Measures

93. The procedures for addressing items identified during a part 12 inspection that require corrective measures are currently set forth in § 12.39. This final rule relocates these corrective measure procedures to new § 12.41. Currently, licensees are required to submit to the Regional Engineer a plan and schedule within 60 days of filing an independent consultant's report with the Commission, and to complete all corrective measures in accordance with the plan and schedule as approved or modified by the Regional Engineer. Under the existing regulations, the Regional Engineer may extend the time for filing the plan and schedule. The final rule does not modify or eliminate these requirements.

94. Section 12.41 of the final rule incorporates the requirements of existing § 12.36 (emergency corrective measures) and § 12.39 (post-inspection corrective measures) into a single section titled ''corrective measures.'' The revisions in § 12.41(a)(1)(i) clarify that the licensee's plan and schedule must address the recommendations of the independent consultant and include investigation as an option for the licensee to implement. Section 12.41(b)(2) is added to ensure that emergency corrective measures are documented in the corrective plan and schedule required by § 12.41(a)(1).

95. In response to the NOPR, CEATI recommends limiting the corrective plan to only those items that relate to a potential failure mode or will improve or change the understanding of risk associated with the project works.[81] Commenters further recommend eliminating the requirement to submit an annual status report,[82] and creating an appeals board to offer technical guidance to the Part 12 process.[83]

96. Section 12.41(a)(1)(ii) already includes provisions for taking no action for recommended corrective measures in those cases where it is justifiable. The annual status report provides an opportunity to periodically review and update the status (*e.g.,* completed, in progress, outstanding, etc.) of previously-identified corrective measures and provides an opportunity to revisit the priority and status of the measures to ensure that they are acted upon. We do not consider an annual status update to be too frequent. Commission staff has access to other resources for technical advice and review and therefore there is no need to create a separate appeals board or board of consultants. Based on a comment received from CEATI on Chapter 16 of the Engineering Guidelines,[84] § 12.41(b) was revised to reference § 12.3(b)(4) of this part, which defines a condition affecting the safety of a project or project works, to demonstrate conditions that would be considered appropriate for the reporting of an emergency corrective measure. In addition, the final rule revises the first sentence of § 12.41(b) to emphasize that it is the licensee's responsibility to ensure that the independent consultant complies with the notification requirements of this paragraph. No other substantive revisions were made to proposed § 12.41 following the NOPR.

13. Section 12.42—Preliminary Reports

97. As discussed above, the final rule relocates requirements regarding preliminary reports that the NOPR had proposed for inclusion in § 12.40(f) to a new section of subpart D, § 12.42.[85] This section requires the independent consultant team, at least 30 days before performing a periodic inspection or comprehensive assessment, to prepare and file a preliminary report. The purpose of the preliminary report is two-fold: (1) It documents the independent consultant team's initial findings after reviewing the project information; and (2) it demonstrates the team's preparation for conducting the site inspection. If the preliminary report does not clearly demonstrate that the independent consultant team is adequately prepared for the inspection, the Regional Engineer may require the inspection be postponed.

14. Alaska-Specific Concerns

98. A few commenters asserted that in broadening the scope of independent consultant dam safety inspections, the NOPR takes a one-size-fits-all approach that will place an unfair burden on Alaska's smaller, less complex projects.[86] The Alaska commenters further suggest that the NOPR underestimated the costs to small projects of the proposed changes to independent consultant inspections, particularly by failing to consider the costs associated with a larger inspection team traveling to project sites in Alaska, including the cost of remote travel.[87]

99. The Commission did not take a one-size-fits-all approach to the changes to the project safety inspection program proposed in the NOPR and adopted, with modifications, in this final rule. As explained above, the revised inspection approach provides for a two-tier inspection structure, consisting of a periodic inspection (§ 12.35) and a more robust comprehensive assessment (§ 12.37). The size of the inspection team is dependent on the project so that it is ''commensurate with the scale, complexity, and relevant technical disciplines of the project and type of review, inspection, and assessment being performed.''[88] Moreover, § 12.31(b) of the final rule defines an independent consultant team as consisting of one or more people. For less complex projects, one individual may be able to satisfy the requirements of an independent consultant team. Finally, the final rule incorporates provisions to allow less complex project licensees to seek an exemption from the requirements of subpart D (§ 12.33(a)), a waiver of the 10-year requirement to perform a comprehensive assessment (§ 12.34), or a waiver of the requirement to perform a risk analysis as part of the comprehensive assessment (§ 12.37(g)). Each of these provisions is designed to allow independent consultant

[81] *See* CEATI Comments at 14.

[82] *See, e.g.,* NHA Comments at 12; CEATI Comments at 14.

[83] *See* NHA Comments at 12.

[84] *See* CEATI's September 15, 2020 Comments on Chapter 16 of the Engineering Guidelines at 28 (filed in Docket No. AD20–21–000).

[85] *See supra* P 92.

[86] *See, e.g.,* Alaska Power Association's September 18, 2020 Comments (Alaska Power Comments); Cooper Valley Electric's September 14, 2020 Comments (Cooper Valley Comments); Alaska Electric Light & Power Company's September 18, 2020 Comments (Alaska Electric Comments); *see also* U.S. Senator Lisa Murkowski's November 5, 2020 letter (supporting Alaska Power Association's comments).

[87] *See, e.g.,* Alaska Power Comments at 3.

[88] 18 CFR 12.31(b)(3).

inspections to be tailored to the unique circumstances and safety issues of each project and, if circumstances warrant, to eliminate or reduce the frequency of certain subpart D requirements. Comments specific to burden and costs estimates for the information collection activities associated with this final rule are addressed below.[89]

B. Owner's Dam Safety Program

100. As the NOPR explained, the Commission began developing its Owner's Dam Safety Program guidance following the December 2005 failure of Taum Sauk Dam, in an effort to encourage licensees to foster and prioritize a strong dam safety culture among their organizations and to help decrease the likelihood of preventable dam safety incidents. In August 2012, the Director of D2SI issued letters to all owners of high or significant hazard potential dams requiring them to develop and submit an Owner's Dam Safety Program.[90] Additional information and guidance on the development of an Owner's Dam Safety Program has been available on the Commission's website since this time. New subpart F consolidates and codifies that guidance.

1. Section 12.60—Applicability

101. Section 12.60 specifies that an Owner's Dam Safety Program must be submitted by any licensee that has a dam or other project work with a high or significant hazard potential. This does not represent a change from existing practice.

102. No comments were received on this section. Following the NOPR, the cross-reference to the definitions of high or significant hazard potential was updated based on the revised definitions contained in § 12.3(b)(13)(i) and (ii). No other revisions were made to proposed § 12.60 following the NOPR.

2. Section 12.61—Definitions

103. Section 12.61 defines the terms ''Chief Dam Safety Engineer'' and ''Chief Dam Safety Coordinator,'' as used in subpart F. The Chief Dam Safety Engineer or Chief Dam Safety Coordinator is defined as the person who oversees the implementation of the Owner's Dam Safety Program and has primary responsibility for ensuring the safety of the licensee's dams and other project works. The only difference between the definitions is that a Chief Dam Safety Engineer must be a licensed professional engineer.

104. In response to the NOPR, commenters requested clarification of professional engineer licensure,[91] and suggested that flexibility should be built in to allow licensees to use different terms than those provided in this section.[92]

105. Individual states determine the requirements for the licensure of professional engineers. Those performing professional engineering services are responsible for following applicable state regulations. The final rule revises § 12.61(a) to indicate that the Chief Dam Safety Engineer must be a licensed *professional* engineer *with experience in dam safety.* For consistency, the final rule also revises § 12.61(b) to clarify that the Chief Dam Safety Coordinator in ''is not required to be a licensed *professional* engineer.'' The terms Chief Dam Safety Engineer and Chief Dam Safety Coordinator should be used consistently in documentation and correspondence with the Commission. No other substantive revisions were made to proposed § 12.61 following the NOPR.

3. Section 12.62—General Requirements

106. Section 12.62 establishes three general requirements for an Owner's Dam Safety Program. Section 12.62(a) requires an Owner's Dam Safety Program to designate either a Chief Dam Safety Engineer or a Chief Dam Safety Coordinator. Any Owner's Dam Safety Program that applies to one or more dams or other project works with a high hazard potential must designate a Chief Dam Safety Engineer. Section 12.62(b) requires the Owner's Dam Safety Program to be signed by the owner and the Chief Dam Safety Engineer or Chief Dam Safety Coordinator, as applicable. Section 12.62(c) requires the Owner's Dam Safety Program to be reviewed and updated on a periodic basis. Although § 12.62(d) permits the owner to designate outside parties, such as consultants, to serve as Chief Dam Safety Engineer or Chief Dam Safety Coordinator, the owner retains ultimate responsibility for the safety and day-to-day implementation of the projects.

107. Commenters on the NOPR requested clarity as to who from the owner's organization should sign the Owner's Dam Safety Program,[93] recommended adding a requirement to provide formal documentation of any agreement delegating an individual outside the owner's organization to serve as a Chief Dam Safety Engineer or Chief Dam Safety Coordinator,[94] and stated that the dam safety industry might not have sufficiently qualified individuals to perform the requirements.[95]

108. Owner's organizations vary widely in type and size, from sole proprietorships to corporations to municipalities. The requirement in § 12.62(b) that the owner, along with the Chief Dam Safety Engineer or Chief Dam Safety Coordinator, sign the Owner's Dam Safety Program ensures that the legal entity responsible for the dam(s) or other project works accepts the program that is established to promote dam safety within their organization in order to help decrease the likelihood of preventable dam safety incidents. It is up to each organization to determine the appropriate signatory for signing the Owner's Dam Safety Program.

109. The final rule revises § 12.62 to include a statement that any delegation of authority made in accordance with the requirements of this section must be documented in the Owner's Dam Safety Program and to clarify that the responsibilities that may be delegated include program implementation. In response to commenters' concerns about a lack of qualified individuals, provisions for developing and implementing an Owner's Dam Safety Program have been in place as guidance for many years and industry has been able to provide adequate resources and training to satisfy the requirements of this section. Moreover, it is crucial that licensees accept responsibility for, and take all reasonable steps to implement, an effective safety program. The cross-reference to the definition of high hazard potential was updated based on the revised definition contained in § 12.3(b)(13)(i). No other substantive revisions were made to proposed § 12.62 following the NOPR.

4. Section 12.63—Contents of Owner's Dam Safety Program

110. Section 12.63 establishes the minimum contents of an Owner's Dam Safety Program. Sections 12.63(a)–(f) each correspond to a topic area that should be addressed in an Owner's Dam Safety Program document and identified in the document's table of contents, as provided in current D2SI guidance available on the Commission's website.[96] Under § 12.63(g), the NOPR

[89] *See* discussion *infra* Part V.A.

[90] Letter to All Licensees and Exemptees of High and Significant Hazard Potential Dams Requiring Submittal of an Owner's Dam Safety Program, August 2012, *https://www.ferc.gov/sites/default/files/2020-04/letter-submit-odsp.pdf.*

[91] CEATI Comments at 14–15.

[92] *Id.* at 15.

[93] *Id.*

[94] *Id.*

[95] NHA Comments at 12.

[96] FERC, *Outline for Owner's Dam Safety Program—Table of Contents, https://www.ferc.gov/*

Continued

also proposed that the Owner's Dam Safety Program should include any additional information that may be recommended by the Engineering Guidelines, a draft chapter of which is in development and will be provided at a later date for public review and comment.

111. In response to the NOPR, commenters recommended minor editorial changes and requested clarification of what is meant by ''other information described by the Guidelines'' in § 12.63(g).[97] Existing guidance pertaining to the content of an Owner's Dam Safety Program is available on the Commission's website. To eliminate any confusion, the final rule deletes the references to the Engineering Guidelines. No other substantive revisions were made to proposed § 12.63 following the NOPR.

5. Section 12.64—Annual Review and Update

112. Section 12.64 requires licensees to review and update an Owner's Dam Safety Program. This section specifies that any Owner's Dam Safety Program must be reviewed by the licensee's dam safety staff and discussed with senior management on an annual basis, and that any findings, analysis, corrective measures, or revisions be submitted to the Regional Engineer.

113. In response to the NOPR, commenters recommended deleting the entire section as it appears to duplicate submittal of this information elsewhere,[98] requested clarification as to whether the annual review of the Owner's Dam Safety Program will take the place of the existing annual internal audit,[99] and requested clarification as to which Regional Engineer the Owner's Dam Safety Program should be submitted for owners with dams in more than one Regional Office's territory.[100]

114. The annual review and update will replace what commenters, such as NHA, refer to as the existing annual internal audit. Further, the report on the annual review of the Owner's Dam Safety Program should not be conflated with the Owner's Inspection Preparation Form.[101] These are not duplicative efforts. The Owner's Inspection Preparation Form is an optional form that an owner may choose to complete to help their staff prepare for a field inspection conducted by D2SI staff. This form is not typically submitted to the Commission. Clarification of the annual review process and how Owner's Dam Safety Programs should be filed for owners with dams in multiple Regional Offices will be provided in future Commission guidance. No revisions were made to proposed § 12.64 following the NOPR.

6. Section 12.65—Independent External Audit and Peer Review

115. Section 12.65 describes the requirements for independent external audits and peer reviews, which must be completed at least once every five years for any Owner's Dam Safety Program that applies to one or more dams or other project works having a high hazard potential classification. The qualifications of the review team must be submitted to the Regional Engineer in advance, and the Regional Engineer's acceptance must be obtained prior to performing the audit or peer review. The Commission will review the qualifications to ensure that the review team has sufficient expertise and a defined plan to review the Owner's Dam Safety Program. The findings of the external audit or peer review team must be documented in a report to be reviewed by licensee staff, including senior management, and submitted to the Regional Engineer.

116. In response to the NOPR, NHA requested that the external audit of the Owner's Dam Safety Program remain separate from the periodic inspection and comprehensive assessment,[102] and CEATI recommended identifying a baseline date to be used for the first audit from which the deadlines for all subsequent audits could be determined.[103] Commenters also asked about the difference between an independent external audit and a peer review,[104] and suggested adding information for terms which ensure the independence of the proposed auditor or peer review team.[105]

117. As explained above, the external audit of the Owner's Dam Safety Program is distinct from the independent consultant team's review of the Owner's Dam Safety Program during the periodic inspection (§ 12.35(d)(4)) and comprehensive assessment (§ 12.37(d)).[106] Per existing practice, the date of the initial external audit report of the Owner's Dam Safety Program establishes the date of the subsequent five-year audit reports. Generally, an external audit would be more limited in scope and the minimum level of effort compared to the peer review process. A licensee may elect to complete a more detailed peer review performed by a team of at least three reviewers. If necessary, the difference between an external audit and a peer review will be further clarified in future Commission guidance. The final rule revises § 12.65(b) to include a requirement that the statement of qualifications for the proposed auditor must also demonstrate the independence of the auditor or peer review team from the licensee and its affiliates.

118. Finally, the final rule updates an internal cross-reference to the definition of hazard potential and removes the statement that additional guidance is provided in the guidelines. No other substantive revisions were made to § 12.65 following the NOPR.

C. Public Safety and Miscellaneous Updates

119. In the NOPR, the Commission proposed several changes to subparts A, B, C, and E of 18 CFR part 12, most of which are minor in nature and necessary to ensure consistency with the replaced subpart D and new subpart F. The two most notable changes relate to the reporting of public safety incidents and the development and submittal of public safety plans.

1. Subpart A—General Provisions

120. Subpart A describes the general provisions and definitions that apply under part 12 of the regulations. The NOPR proposed to update or add several definitions and make other minor changes to ensure consistency with replaced subpart D and new subpart F. Section 12.3(b)(4) provides a list of conditions affecting the safety of project works. The NOPR proposed to update two of these conditions to ensure their definitions are consistent as applied in current practice. In addition, the NOPR proposed to add ''overtopping of any dam, abutment, canal, or water conveyance'' to the list of conditions that could affect project safety and new definitions for ''Water Conveyance,'' ''Engineering Guidelines,'' and ''Owner's Dam Safety Program.'' The NOPR proposed additional minor revisions in subpart A to ensure

sites/default/files/2020-04/outline-with-discussion.pdf.

[97] *See, e.g.,* CEATI Comments at 16; NHA Comments at 12.

[98] *See, e.g.,* NHA Comments at 12–13.

[99] *Id.* at 13.

[100] CEATI Comments at 16.

[101] The Owner's Inspection Preparation Form is an outline of specific items related to the Owner's Dam Safety Program to be discussed during a field inspection conducted by D2SI staff. This form is available on the Commission's website at *https://www.ferc.gov/sites/default/files/2020-04/what-do-we-see.pdf.*

[102] NHA Comments at 13.

[103] CEATI Comments at 16.

[104] *Id.*

[105] *Id.* at 17.

[106] *See supra* P 62.

consistent terminology and to update internal cross-references.

121. In addition, the Commission proposed to add § 12.4(d) to make clear that licensee non-compliance with any dam safety directive issued by the Commission, a Regional Engineer, or other authorized Commission representative could result in sanctions such as the Commission issuing a cease generation order, assessing civil penalties, or revoking a project's license pursuant to section 31 of the FPA.[107]

122. In response to the NOPR, NHA recommended that the Commission further clarify the definitions of significant and low hazard potential and asked why the phrase ''including recreation'' was added to § 12.3(b)(4)'s definition of ''condition affecting the safety of a project or project works.'' [108] CEATI recommended defining the terms ''Project,'' ''Project Works,'' ''Dam,'' and ''Development'' and suggested that the Commission develop a different hazard potential scheme for canals and water conveyance facilities.[109]

123. Section 12.3(b)(13) of the final rule adds separate definitions for ''Significant hazard potential'' (§ 12.3(b)(13)(ii)) and ''Low hazard potential'' (§ 12.3(b)(13)(iii)). Adding the phrase ''including recreation'' clarifies § 12.3(b)(4)'s definition of ''Condition affecting the safety of a project or project works'' by providing a statutorily-defined example of ''other beneficial public uses.'' [110] This addition does not expand the original definition nor does it represent a departure from D2SI's current practice. The terms ''Dam'' and ''Development'' are defined in §§ 12.3(b)(6) and 12.3(b)(7), respectively. The terms ''Project'' and ''Project Works'' are defined in section 3 of the FPA,[111] as stated in § 12.3(a). For consistency with the statute's terminology, the final rule eliminates references in proposed § 12.3 to ''project feature'' by substituting in its place the term ''project work.'' [112] For the purposes of defining hazard potential, the Commission believes it is appropriate to extend the current approach used to define hazard potential for dams to canals and other water conveyances. The emphasis on the definition of hazard potential is based on the resulting consequences should the structure fail and not on the structure itself. Therefore, the Commission does not agree with the recommendation to develop a different hazard potential definition or approach for canals and water conveyance structures.

124. The final rule deletes the definition of and an additional reference to the ''Guidelines.'' The Engineering Guidelines remain available on the Commission's website.

125. The term ''canal'' is deleted in §§ 12.3(b)(4)(xiii) and 12.3(b)(13) as its usage is redundant with the term ''water conveyance'' also used in each paragraph. For clarity, one of the conditions affecting safety, found in § 12.3(b)(4)(xi), was revised from ''Significant instances of vandalism or sabotage'' to read ''Security incidents (physical and/or cyber).'' No other substantive changes were made to subpart A following the NOPR.

2. Subpart B—Reports and Records

126. Subpart B describes the requirements for reporting, verifying, and providing records to the Commission regarding dam safety-related matters, including public safety incidents. The NOPR proposed minor revisions to ensure consistency with other sections of the regulations and the dam safety program as implemented. In addition, the NOPR proposed additional reporting of public safety-related incidents that involve deaths, serious injuries, or rescues.

127. Revised § 12.10(a)(1) expresses the Commission's preference that initial reports of conditions affecting the safety of a project or its works are made within 72 hours of discovery of the condition. The reporting of an incident to the Commission must not in any way inhibit an emergency response to that incident.

128. Revised § 12.10(b) requires licensees to report rescues in addition to deaths and serious injuries, and clarifies the definition of ''project-related'' for the purpose of complying with the mandatory reporting of deaths, serious injuries, and rescues that are considered or alleged to be project-related. For precision and to use terminology that is generally accepted in the dam safety community, the NOPR proposed to replace the term ''project-related accident'' with ''project-related incident.''

129. Currently, § 12.10(b)(4) defines ''project-related,'' as ''any deaths or serious injuries involving a dam, spillway, intake, or power line, *or which take place at or immediately above or below a dam.*'' [113] In D2SI staff's experience, the final clause of the definition has been the most problematic for licensees to apply, often leading licensees to report as project-related those deaths or serious injuries that occur near a dam but are wholly unrelated to the project or its operation. The NOPR proposed to revise the definition of ''project-related'' to make clear that an incident is project-related only if it occurs at project works, involves changes in water levels resulting from operations of project works, or is otherwise attributable to the project or its operation.

130. In response to the NOPR, CEATI suggested that a threshold for reporting rescues and serious injuries should be established by excluding minor incidents not requiring treatment at a medical facility.[114] NHA requested clarification of the reporting requirements for safety related incidents and clarification of safety related incidents related to changes in water levels or flows.[115]

131. For clarity, the final rule revises the general structure of § 12.10(b) to follow § 12.10(a). Section 12.10(b)(1) provides the reporting requirements for initial reports of deaths, serious injuries, or rescues. The initial report can be made by email or telephone. This is a change from the initial written reporting requirements proposed in the NOPR. For consistency, the final rule applies this same change to § 12.10(a)'s reporting requirements for initial reports of conditions affecting the safety of a project or its works to make clear that initial reports can be made by email or telephone. Accordingly, the final rule deletes from § 12.10(a) all references to ''oral reports'' and adds in its place ''initial reports.''

132. Section 12.10(b)(2) provides the requirements for written reports by outlining three categories of incidents and indicating whether a written report is required: (i) Any death, serious injury, or rescue that is considered or alleged to be project-related (written

[107] *See* NOPR, 172 FERC ¶ 61,061 at P 78; 16 U.S.C. 823b, 825h. In response to a request to clarify § 12.4(c)–(d)'s use of the phrase ''any order or directive,'' see NHA Comments at 3, we note that by adding new § 12.4(d), the final rule does not create new penalty authority. Rather, this addition simply serves as a reminder that the Commission's existing penalty authority, derived from FPA section 31, applies to the requirements of part 12 of the Commission's regulations.

[108] NHA Comments at 3.

[109] CEATI Comments at 3–4.

[110] As revised, the first sentence of 12.4(b) clarifies that the definition of *Condition affecting the safety of a project or project works* includes any condition, event, or action at the project which might compromise the ability of any project work to function safely for its intended purposes, including other beneficial public uses such as recreation.

[111] 16 U.S.C. 796.

[112] To ensure consistent use of the terms ''project works'' or ''project work'' (if referring to a singular structure), the final rule makes similar revisions in §§ 12.30, 12.35, 12.60, 12.61, 12.62, and 12.65.

[113] 18 CFR 12.10(b)(4) (emphasis added).

[114] CEATI Comments at 4–5.

[115] NHA Comments at 3–4.

report required); (ii) any death that is not project-related (copy of media article or law enforcement report accepted); and (iii) any serious injury or rescue that is not project-related (no written report required). This structure should clarify the written reporting requirements for each type of incident.

133. In addition, proposed § 12.10(b)(3) from the NOPR was deleted, as it provided an outdated form of hard copy submittal (newspaper clipping); proposed § 12.10(b)(4) was relocated to § 12.10(b)(3) of the final rule. The final rule further revises § 12.10(b)(3)(iii) to clarify that the definition of ''project-related'' also includes any deaths, serious injuries, or rescues that involve a licensee employee, contractor, or other person performing work at a licensed project facility and are related in whole or in part to the work being performed. The final rule also adds new § 12.10(b)(4) to clarify that, for incident reporting purposes, a serious injury includes any injury that results in treatment at a medical facility or a response by licensee staff or another trained professional.

134. Finally, the NOPR proposed and the final rule adopts two changes to existing requirements concerning the maintenance of records. First, the final rule revises § 12.12(b)(3) to permit storage media other than microform, consistent with part 125 of the Commission's regulations. Second, the final rule adds § 12.12(d) to require the licensee to provide, to the Regional Engineer, physical and electronic records necessary to ensure the safety of project works, for all projects subject to subpart D or as otherwise requested by the Regional Engineer. Under § 12.12(b)(2)(ii)(A) of our existing regulations, which remains unchanged, the Regional Engineer has the authority to require an applicant or licensee to submit such reports or information. NHA suggests that there is no need to require physical records in addition to electronic copies and recommends deleting the reference to ''physical'' in § 12.12(d).[116] We decline to adopt NHA's recommendation because hard copies of certain records are necessary in case of a power outage or for those instances when electronic files might not be available. No changes were made to proposed § 12.12 following the NOPR.

3. Subpart C—Emergency Action Plans

135. Emergency action plans, which must be developed in consultation with federal, state, and local public health and safety officials, are designed to provide early warning to upstream and downstream inhabitants, property owners, operators of water-related facilities, recreational users, and others in the vicinity who might be affected in the event of a project emergency.[117] Subpart C describes the general requirement that applicants and licensees develop and submit emergency action plans, explains when an exemption from this requirement may be warranted, identifies the required contents of the plans, and describes the timing for plan filing and regular updating.

136. In the NOPR, the Commission proposed only minor revisions to §§ 12.20, 12.22, and 12.24 to ensure consistency with the filing guidelines available on the Commission's website and to update terminology with respect to the Engineering Guidelines.

137. The Commission received no comments on its proposed revisions to subpart C. The final rule deletes from § 12.22 two references to the Engineering Guidelines. No other revisions were made to proposed subpart C following the NOPR.

4. Subpart E—Other Responsibilities of Applicant or Licensee

138. Subpart E describes other applicant and licensee responsibilities, including the requirement to install warning and public safety devices, and test spillway gates. In the NOPR, the Commission proposed to replace one section and update another to codify a function of the dam safety program as currently implemented and to ensure the use of consistent terminology in conjunction with the proposed replacement of subpart D. The Commission further explained that subpart E would be renumbered to now include §§ 12.50 to 12.54 to accommodate the proposed inclusion of additional sections in subpart D, and that the proposed revisions to subpart E would not represent a change in practice.

139. The revisions to § 12.52 (warning and safety devices, previously § 12.42) preserve the current regulatory requirement that licensees must install, operate, and maintain warning and safety devices to protect the public, with a minor revision to ensure consistency with the rest of part 12. Revised § 12.52(b) codifies existing D2SI guidance that the Commission may require a licensee to submit a public safety plan that documents the installation, operation, and maintenance of public safety devices.[118]

140. Finally, the NOPR proposed to revise § 12.54 (testing spillway gates, currently § 12.44) to replace the term ''periodic inspection'' with the more generic term ''an inspection.'' This terminology change ensures that Commission staff can continue to verify the operability of spillway gates during their routine inspections, and is intended to prevent this section from being misconstrued as applying only to a periodic inspection as it is defined and described in subpart D of this final rule.

141. In response to the NOPR, NHA asks whether the public safety plan is required to be developed in accordance with the Commission's Guidelines for Public Safety.[119] Other commenters suggested minor revisions to the text of § 12.52(a) related to protecting the public from project operations.[120]

142. Section 12.52(b) provides the provision that the Regional Engineer may require a licensee to file a public safety plan. The Guidelines for Public Safety at Hydropower Projects, available on the Commission's website, provide helpful guidance for developing and submitting public safety plans. The last sentence in § 12.52(b) was deleted to remove the reference to the guidelines. No changes to § 12.52(a) are necessary as the existing text (formerly located in § 12.42) is sufficient to ensure that licensees take appropriate warning and safety measures to protect the public from changes in flow due to project operations.[121] No substantive revisions were made to subpart E following the NOPR.

V. Regulatory Requirements

A. Information Collection Statement

143. The Paperwork Reduction Act[122] requires each federal agency to seek and obtain the Office of Management and Budget's (OMB) approval before undertaking a collection of information (including reporting, record keeping, and public disclosure requirements) directed to ten or more persons or contained in a rule of general applicability. OMB regulations require approval of certain information collection requirements contained in

[116] NHA Comments at 4.

[117] 18 CFR 12.20(b).

[118] FERC, *Guidelines for Public Safety at Hydropower Projects* (Mar. 1992), *https://www.ferc.gov/sites/default/files/2020-04/public-safety.pdf.*

[119] NHA Comments at 12.

[120] *See, e.g.,* CEATI Comments at 14.

[121] The existing text, which this final rule relocates to § 12.52(a), requires licensees to install, operate, and maintain safety devices to warn the public of fluctuations in flow from the project.

[122] 44 U.S.C. 3501–3521.

final rules published in the **Federal Register** (including deletion, revision, or implementation of new requirements).[123] Upon approval of a collection of information, OMB will assign an OMB control number and an expiration date. Respondents subject to the filing requirements of a rule will not be penalized for failing to respond to the collection of information unless the collection of information displays a valid OMB control number.

144. The following discussion describes and analyzes the collections of information modified by this final rule.

145. The Commission solicited comments on the Commission's need for the proposed information collection in the NOPR and in draft Chapters 15 through 18 of the Engineering Guidelines,[124] whether the information will have practical utility, the accuracy of the burden estimates, ways to enhance the quality, utility, and clarity of the information to be collected or retained, and any suggested methods for minimizing respondents' burden, including the use of automated information techniques. All burden estimates for all information collection activities (including those in Chapters 15 through 18 of the Engineering Guidelines) are discussed in this final rule and in the Paperwork Reduction Act supporting statement.

146. *Public Reporting Burden:* In this final rule, the Commission establishes two tiers of independent consultant safety inspection reports, codifies existing guidance related to the Owner's Dam Safety Program, and requires reporting of rescues that occur at hydroelectric projects. The final rule, in conjunction with the corresponding updates to the Engineering Guidelines, revises and adds information collection activities in 18 CFR part 12.

1. Subpart D: Independent Consultant Inspections

147. The revisions to 18 CFR part 12, subpart D do not affect the current five-year filing cycle for independent consultant's safety inspection reports. However, they do modify the scope of reports on an alternating cycle, such that the reports alternate between a periodic inspection (a reduction in scope compared to the previous inspection requirement) and a comprehensive assessment (an increase in scope compared to the previous inspection requirement). The hydroelectric facilities regulated by the Commission vary greatly in size and complexity, and there is no single representative project. To evaluate the burden associated with the revisions to independent consultant safety inspection reports, Commission staff developed separate cost estimates for ''Simple'' and ''Complex'' hydroelectric facilities, which are listed in the tables below. Commission staff recognizes that there are projects with annualized costs less than the ''Simple'' estimate or greater than the ''Complex'' estimate, but Commission staff believes the values presented are appropriately representative when averaged across the total inventory of hydroelectric projects and respondents. The assumption underlying these burden estimates is that one-half of licensed projects can be represented by each category.[125]

148. The Commission received comments on some of the information collection activities proposed for subpart D. A few commenters raised general concerns about the cost estimates provided for independent consultant inspections and reports, suggesting that the Commission's estimates underestimate the costs to small, less complex projects located in Alaska.[126] The Commission recognizes the unique challenges faced by Alaska licensees, but continues to find that the cost estimates provided represent average values that are appropriately representative when averaged across the total inventory of hydroelectric projects and respondents. As described above, the final rule includes several provisions that will allow the project safety inspection requirements to be tailored to the unique needs and safety considerations of individual projects.[127] CEATI comments that the cost for performing a risk analysis can exceed the estimates provided in the NOPR and notes that cost estimates of $83 per hour are not representative of consulting engineers' fees, which can exceed $150 per hour.[128] Commission staff remains confident that the burden and cost estimates presented in the NOPR are representative of the implementation efforts described in the final rule. To date, Commission staff has performed nearly 30 pilot risk analyses alongside licensees. This experience has confirmed that the effort required to complete risk analyses closely aligns with the estimates included in the NOPR and updated in this final rule. We agree with CEATI that the $83 per hour rate is not representative of consulting engineers' fees.[129] In fact, Commission staff's detailed cost breakdowns, which informed the burden and cost estimates for professional services contracting costs (see Table 2 below), used a range of unit rates up to and including $300 per hour for consulting engineers.

149. Some commenters requested that ''generating equipment'' be added to the list of project works excluded from inspections at 18 CFR 12.32. As discussed above, the Commission is not adopting this requested modification because generating equipment is a critical element in the passage and discharge of water through a powerhouse and the failure of such equipment can result in operational and life safety concerns.

150. Some commenters requested further clarity in subpart D to distinguish between the inspection requirements for high hazard potential and low hazard potential project works. Because the inspection requirements for high and low hazard potential project works are discussed in § 12.30, no revisions to 18 CFR 12.32 were made based on this comment.

151. A commenter requested that the Commission reconsider the proposal to revise 18 CFR 12.33 by rescinding all previously approved exemptions from the requirements of subpart D. The final rule does not retain the blanket rescission of all previously approved exemptions and instead provides that the Director of D2SI on a case-by-cases basis may rescind a previously approved exemption for good cause shown. In addition, for future exemption requests, the Director of D2SI may require the licensee to complete a comprehensive assessment prior to considering the exemption request.

[123] *See* 5 CFR 1320.12.

[124] Concurrently with issuance of the NOPR, the Commission issued for public comment the draft chapters of the Engineering Guidelines in Docket Nos. AD20–20–000 (Chapter 15—Supporting Technical Information Document), AD20–21–000 (Chapter 16—Part 12D Program), AD20–22–000 (Chapter 17—Potential Failure Mode Analysis), and AD20–23–000 (Chapter 18—Level 2 Risk Analysis).

[125] The cost data presented in the tables reflect the change in annualized cost based on the changes described in the final rule. The annualized costs are based on the total cost, in 2021 dollars, over the typical 10-year Part 12D inspection cycle, which comprises one Comprehensive Assessment and one Periodic Inspection, and the associated activities. The scope of each inspection and associated reporting requirements are defined in the final rule.

[126] *See* Alaska Power Comments; Cooper Valley Comments; Alaska Electric Comments; *see also* U.S. Senator Lisa Murkowski's November 5, 2020 letter (supporting Alaska Power Association's comments).

[127] *See supra* P 99.

[128] *See* CEATI Comments at 2, 3.

[129] The $83 per hour figure ($87 per hour in 2021 dollars) represents *direct* costs (generally labor costs) associated with licensee staff's performance of efforts related to the changes contemplated in the NOPR and adopted in this final rule. These costs do not include costs for professional services, such as consulting engineers' fees, aside from the costs associated with the licensee's administration and execution of contracts for professional services. Burden and cost estimates for professional services contracting are provided in Table 2.

152. With regard to the revised information collection activities in 18 CFR 12.40, some commenters recommend changing the effective date to 18 months following the date of the final rule, extending the due date for projects not previously inspected under Part 12 from two years to three years, limiting the Regional Engineer's ability to unilaterally change the type of report to be filed, and further clarifying the purpose of the preliminary report. In response to these comments, the final rule revises § 12.40(a)(2) so that the date for a report to be filed under this subpart will be 18 months after the rule's effective date. The final rule does not, however, change the frequency of the required reports. As noted above, Commission staff is confident that two years is sufficient time to complete a comprehensive assessment and a file a report. Any potential benefits of extending this work over a three-year period would be outweighed by the negative impacts that would result if too much time elapses between reviewing the project information, conducting the inspection and performing the Potential Failure Mode Analysis and semi-quantitative risk analysis, and preparing the report.

153. In response to comments, the final rule revises § 12.40(e) to include a required finding of ''good cause'' for the Regional Engineer to change the type of report due.

154. In response to requests for further clarity regarding preliminary reports, the Commission explains above that the preliminary report's purpose is to demonstrate whether the independent consultant team has adequately prepared for their inspection, including the review of background material and instrumentation data. This requirement helps the independent consultant team identify areas in the field that may require additional attention or effort. In the NOPR, the Commission proposed to include information about the preliminary report in § 12.40(f). However, because it covers different material, the final rule relocates the preliminary report requirement to § 12.42, which is a new, standalone section.

2. Subpart F: Owner's Dam Safety Program

155. The addition of 18 CFR part 12, subpart F codifies existing requirements for the preparation or collection of information. As we explained in the NOPR, those licensees who are required to prepare an Owner's Dam Safety Program, due to the hazard potential classification of their licensed project(s), have already done so. When a new license is issued for a non-constructed or previously unlicensed project, the Commission includes a license article requiring an Owner's Dam Safety Program if warranted. There may be situations in which a project's hazard potential classification increases from low to either significant or high (*e.g.,* due to new housing development within the hypothetical inundation area). In that case, if that licensee has no other projects classified as significant or high (*i.e.,* does not have an Owner's Dam Safety Program), then the licensee would be required to prepare a new Owner's Dam Safety Program. However, this is not expected to occur frequently or with any regularity.

156. The Commission received comments on 18 CFR 12.62 (General Requirements for Owner's Dam Safety Program), including:

- Requests to clarify who from the owner's organization should sign the Owner's Dam Safety Program;
- Recommendations to require formal documentation of any agreement delegating the position of Chief Dam Safety Engineer or Chief Dam Safety Coordinator to an individual outside the owner's organization; and
- Statements that the dam safety industry may lack sufficiently qualified individuals to perform the requirements of subpart F.

157. As explained above, because dam owner's organizations vary widely in type and size, from sole proprietorships to corporations to municipalities, it is up to each organization to determine the appropriate signatory for the Owner's Dam Safety Program. As to delegating the role of Chief Dam Safety Engineer or Chief Dam Safety Coordinator to an outside party, the final rule revises § 12.62(d) to require that any such delegation of authority be documented in the Owner's Dam Safety Program. In response to commenters' concerns about a lack of qualified individuals, provisions for developing and implementing an Owner's Dam Safety Program have been in place as guidance for many years and industry has been able to provide adequate resources and training to satisfy the requirements of this section. Moreover, as we explain above, it is crucial that licensees accept responsibility for, and take all reasonable steps to implement, an effective safety program.

158. Other comments on subpart F asked about the difference between a review of an Owner's Dam Safety Program performed during an independent consultant inspection and an independent external audit of the Owner's Dam Safety Program and suggested adding provisions to ensure the independence of the proposed auditor or peer review team.

159. As explained above, the external audit of the Owner's Dam Safety Program, described in 18 CFR 12.65, is distinct from the review of the Owner's Dam Safety Program performed as part of the periodic inspection and comprehensive assessment described in subpart D. Per existing practice, the date of the initial external audit report of the Owner's Dam Safety Program establishes the date of the subsequent five-year audit reports. As explained above, an external audit would generally be more limited in scope and the minimum level of effort compared to the peer review process. A licensee may elect to complete a more detailed peer review performed by a team of at least three reviewers. If necessary, the difference between an independent external audit and a peer review of the Owner's Dam Safety Program will be further clarified in future Commission guidance. The final rule revises § 12.65(b) to include a requirement that the statement of qualifications must demonstrate the independence of the auditor or peer review team from the licensee and its affiliates.

160. The Commission also received comments on 18 CFR 12.64 (Annual Review and Update of the Owner's Dam Safety Program), including:

- A recommendation that the entire section be deleted, since it appears to duplicate other information collection activities;
- A request to clarify whether the annual review of the Owner's Dam Safety Program will take the place of the existing annual internal audit; and
- A request to clarify to which Regional Engineer the Owner's Dam Safety Program should be submitted for owners with dams located in more than one Regional Office's territory.

161. As explained above, the report on the annual review of the Owner's Dam Safety Program should not be conflated with the Owner's Inspection Preparation Form. The Owner's Inspection Preparation Form is an optional form that can be completed by the owner to help their staff prepare for a field inspection; this form is not typically submitted to the Commission. Clarification of the annual review process and how Owner's Dam Safety Programs should be filed for owners with dams in multiple Regional Offices will be provided in future Commission guidance.

162. As stated above, subpart F codifies previous existing requirements for the preparation or collection of Owner's Dam Safety Program

information. Licensees who are required to prepare an Owner's Dam Safety Program, due to the hazard potential classification of their licensed project(s), have already done so. For this reason, we estimated in the NOPR that no incremental burden or cost would result from the proposed addition of subpart F.

163. However, for informational purposes, this final rule now provides burden and cost estimates for the information collection activities associated with the Owner's Dam Safety Program. The Commission recognizes that licensee dam safety programs vary widely from large utilities with tens or hundreds of dams to small programs with only a single dam. Therefore, to evaluate the burden and cost estimates for the Owner's Dam Safety Program and to capture differences between large and small programs, Commission staff developed separate estimates for ''Small Programs'' and ''Large Programs,'' reflected in Tables 1 through 3 below. The ''Small Programs'' category is intended to represent licensees with smaller dam safety programs based on the number of dams in their inventory (*i.e.,* less than three high or significant hazard potential dams). The Commission estimates that approximately 80% of licensee dam safety programs are considered Small Programs.

3. Subpart B: Reports and Records

164. The minor revisions to 18 CFR part 12, subpart B require licensees to report the rescue of any person that occurs at hydroelectric facilities, which is in addition to the previous requirements that licensees report public safety incidents that result in the death or serious injury of any person.

165. With respect to changes to subpart B's information collection requirements, the Commission received the following comments on 18 CFR 12.10:

- A suggestion that a threshold for reporting rescues and serious injuries should be established by excluding minor incidents not requiring treatment at a medical facility; and
- A request to clarify the reporting requirements for safety related incidents, including those related to changes in water levels or flows.

166. In response to the suggestion regarding a threshold for reporting rescues and serious injuries, the final rule adds new § 12.10(b)(4) to clarify that a serious injury includes any injury that results in treatment at a medical facility or an on-site response by licensee staff or another trained professional.

167. To clarify the reporting of safety-related incidents, the Commission explains that § 12.10(b)(1) provides that an initial report must be made promptly following any drowning or other incident resulting in death, serious injury, or rescue that occurs at the project works or involves project operations. The initial report can be made by email or telephone. This is a change from the initial written reporting requirements included in the NOPR. For consistency, the final rule applies this same change to the reporting requirements for initial reports of conditions affecting the safety of a project or its works, found in § 12.10(a) to make clear that initial reports can be made by email or telephone. Section 12.10(b)(2) provides the requirements for written reports by outlining three categories of incidents and indicating whether a written report is required: (i) Any death, serious injury, or rescue that is considered or alleged to be project-related (written report required); (ii) any death that is not project-related (copy of media article or law enforcement report accepted); and (iii) any serious injury or rescue that is not project-related (no written report required). The revisions to § 12.10(b) should clarify the reporting requirements for each type of incident. In addition, the final rule deletes § 12.10(b)(3) from the NOPR as it provided an outdated form of hard copy submittal (newspaper clipping). The final rule also revises § 12.10(b)(3)(iii) to include in the definition of ''project-related,'' any deaths, serious injuries, or rescues that ''involve of a licensee employee, contractor, or other person performing work at a licensed project facility and are related in whole or in part to the work being performed.''

4. Engineering Guidelines

168. The Commission also received comments on the four draft chapters of the Engineering Guidelines (Chapters 15–18) that were issued concurrently with the NOPR. Some of these comments were similar to those received on the NOPR and have been addressed above (*e.g.,* additional cost and effort related to new requirements for preparing preliminary reports, conducting a comprehensive assessment review meeting, and reviewing and providing supplemental record analyses included in draft Chapter 16 of the Engineering Guidelines). A few commenters stated that the scope of the Potential Failure Mode Analysis in draft Chapter 17 of the Engineering Guidelines is too encompassing and the risk analysis process described in draft Chapter 18 of the Engineering Guidelines goes beyond what should be required for a risk analysis at this level of study and that both will increase costs for licensees.

169. Regarding the scope of the Potential Failure Mode Analysis, the Commission carefully evaluated specific weaknesses in the current Potential Failure Mode Analysis process identified by the Oroville Forensic Team and their recommendations for improvements to the process.[130] The improvements to the Potential Failure Mode Analysis process, described in Chapter 17 of the Engineering Guidelines, are necessary to reduce identified shortcomings in the existing process and to provide a comprehensive and systematic approach to identifying and evaluating potential failure modes to discover and mitigate future dam safety concerns and incidents.

170. In response to the comment that the risk analysis process described in Chapter 18 of the Engineering Guidelines goes beyond what should be required for a risk analysis at this level, the Commission has reviewed risk analysis approaches and procedures used by other federal agencies for conducting risk analysis for similar levels of studies. The Commission has modeled the scope and detail of the Level 2 risk analysis process in Chapter 18 of the Engineering Guidelines after the Corps and Reclamation's semi-quantitative risk analysis process documented in their *Best Practices in Dam and Levee Safety Risk Analysis* document.[131] The scope and detail of the Level 2 risk analysis process also closely follows the periodic risk analysis described in FEMA's *Federal Guidelines for Dam Safety Risk Management.*[132]

5. Annual Burden and Cost Estimates

171. The Commission has considered all comments on the NOPR and the four draft chapters of the Engineering Guidelines in estimating the incremental burden and cost associated with the revised regulations adopted in this final rule. Aside from adding the burden and cost estimates associated with subpart F's Owner's Dam Safety Program for informational purposes and updating the cost estimates to reflect 2021 dollars, no revisions were made to the burden and cost estimates provided in the NOPR.

[130] *See supra* note 14.

[131] Reclamation and the Corps, *Chapter A–04 Semi-Quantitative Risk Analysis, Best Practices in Dam and Levee Safety Risk Analysis* (July 2019). *https://www.iwrlibrary.us/#/series/Best%20Practices-Manual.*

[132] *See supra* note 24.

172. Table 1 itemizes the estimated annual burden [133] and direct cost [134] of the changes resulting from this final rule. Record keeping requirements are included in the burden and cost estimates for the development and collection of the data and reports. The final rule's direct cost estimates have been updated to reflect 2021 dollars.

TABLE 1—ANNUAL BURDEN AND DIRECT COST CHANGES RESULTING FROM THE FINAL RULE IN DOCKET NO. RM20–9–000 [135]

Type of respondent A.	Type of response B.	Number of respondents C.	Average number of annual responses per respondent D.	Average annual burden hours and cost per response E.	Total number of annual responses (Col. C × Col. D) F.	Total annual burden hours and cost (Col. E × Col. F) G.
Applicant [136] or Licensee [137]	Reports of Project-Related Deaths, Serious Injuries, or Rescues [138].	[139] 65	[140] 2.14	2 hrs.; $174	139	278 hrs.; $24,186.
Licensee of Simple Hydro Facility [141].	Ind. Cons. Team Proposals and Reports on PIs and CAs [142].	[143] 375	[144] 0.1	0 hrs.; $0	37.5	0 hrs.; $0.
Licensee of Complex Hydro Facility.	Ind. Cons. Team Proposals and Reports on PIs and CAs [145].	375	0.1	[146] 0.6 hrs.; $52.20.	37.5	22.5 hrs.; $1,957.50.
Licensee	Exemption Requests [147]	10	1	2 hrs.; $174	10	20 hrs.; $1,740.
Licensee of a Small Program [148] with a High or Significant Hazard Potential Dam or Other Project Work.	Owner's Dam Safety Program (ODSP) Document.	[149] 180	[150] 0.2	[151] 60 hrs.; $5,220.	36	2160 hrs.; $187,920.

[133] ''Burden'' is the total time, effort, or financial resources expended by persons to generate, maintain, retain, or disclose or provide information to or for a Federal agency. For further explanation of what is included in the information collection burden, refer to Title 5 Code of Federal Regulations 1320.3.

[134] Direct costs are those costs (generally labor costs) associated with the applicant's or licensee's staff in the performance of the efforts related to the final rule. These do not include the costs for professional services, although the direct costs do include the costs associated with the applicant's or licensee's administration and execution of contracts for professional services.

[135] Commission staff believes that, in terms of cost for wages and benefits, industry is similarly situated to Commission staff. Therefore, we are using the FERC 2021 average cost (for wages plus benefits) for one FERC full-time equivalent (FTE) of $180,703 (or $87.00 per hour). We note that the NOPR provided cost estimates in 2020 dollars.

[136] As defined by 18 CFR 12.1(a)(2).

[137] As defined by 18 CFR 12.1(a)(1) and (a)(3).

[138] Revisions of 18 CFR 12.10(b)(1), 12.10(b)(2), and 12.10(b)(4) for written reports of project-related deaths, serious injuries, or rescues at project works or involving project operations.

[139] Commission staff assumes the average number of respondents who will file a 12.10(b) public safety incident report documenting a rescue at a hydroelectric project will equal the average number of respondents who filed a 12.10(b) public safety incident report documenting a death or serious injury over the 10-year period from January 1, 2009 through December 31, 2018.

[140] Commission staff assumes the average number of 12.10(b) public safety incident reports documenting rescues at hydroelectric projects will equal the average number of 12.10(b) reports for deaths and serious injuries over the 10-year period from January 1, 2009 through December 31, 2018.

[141] Commission staff estimates no incremental change in direct costs due to the final rule change as compared to the current burden and costs.

[142] Includes direct costs associated with the preparation and submittal of Independent Consultant Team Proposals (18 CFR 12.34) and Reports for Periodic Inspections and Comprehensive Assessments (18 CFR 12.36 and 12.38).

[143] Approximately 750 project developments licensed by the Commission will be subject to the reporting requirement changes resulting from this final rule. This table defines a single response as the consolidated filings associated with the typical 10-year cycle for Independent Consultant's Safety Inspections, which would take effect following implementation of a final rule. A single response includes one each of the reports and other filings required under the scope of a Periodic Inspection and a Comprehensive Assessment. Thus, the total number of responses over a 10-year period will be the number of projects (750), divided equally between the ''Simple'' and ''Complex'' categories of hydroelectric facilities.

[144] As previously noted, this table defines a single response as the consolidated filings associated with the typical 10-year cycle for Independent Consultant's Safety Inspections. Therefore, the number of annual responses is averaged over the 10-year period, or 0.1 responses on average per year.

[145] *See supra* note 141.

[146] Burden costs include hourly wages estimated based on complexity of project, scope of inspection, experience and number of assigned staff, and were compared to industry estimates provided by fewer than nine industry representatives who were contacted by Commission staff.

[147] 18 CFR 12.33(a) includes a provision for licensees to submit a written request to be excluded from the requirements of Subpart D.

[148] A small program is a licensee with less than three high or significant hazard potential dams or other project works.

[149] Commission staff assumes the number of respondents who will file an Owner's Dam Safety Program document will equal the number of respondents who filed an original Owner's Dam Safety Program document over the period from January 1, 2013, through December 31, 2019. Commission staff estimates that 80% of the respondents are from small programs. Thus, the total number of responses (225) times 0.8 is the number of responses from licensees from small programs.

[150] The number of annual responses is averaged over the five-year period, or 0.2 responses on average per year.

[151] Burden costs include hourly wages estimated based on complexity of project, size of program, and scope based on Commission staff estimate.

[152] A large program is a licensee with three or more high or significant hazard potential dams or other project works.

[153] Commission staff assumes the number of respondents who will file an Owner's Dam Safety Program document will equal the number of respondents who filed an original Owner's Dam Safety Program document over the period from January 1, 2013, through December 31, 2019. Commission staff estimates that 20% of the respondents are from large programs. Thus, the total number of responses (225) times 0.2 is the number of responses from licensees from large programs.

[154] *See supra* note 149.

[155] *See supra* note 150.

[156] Commission staff assumes the number of respondents who will file an Owner's Dam Safety Program document will equal the number of respondents that filed an original Owner's Dam Safety Program document over the period from January 1, 2013, through December 31, 2019.

[157] Commission staff assumes the number of respondents who will file an Owner's Dam Safety statement of qualification for external audit or peer review will equal the total number of respondents that filed an original statement of qualification for external audit or peer review over the period from January 1, 2013, through December 31, 2019.

[158] *See supra* note 149.

[159] Commission staff assumes the number of respondents that will file an Owner's Dam Safety report of external audit or peer review will equal the number of respondents that filed an original Owner's Dam Safety Program report of external audit or peer review over the period from January 1, 2013, through December 31, 2019. Commission staff estimates that 80% of the respondents are from small programs. Thus, the total number of responses (225) times 0.8 is the number of responses from licensees from small programs.

[160] Commission staff assumes the number of respondents that will file an Owner's Dam Safety report of external audit or peer review will equal the number of respondents that filed an original Owner's Dam Safety Program report of external audit or peer review over the period from January 1, 2013, through December 31, 2019. Commission staff estimates that 20% of the respondents are from large programs. Thus, the total number of responses (225) times 0.2 is the number of responses from licensees from large programs.

[161] Commission staff assumes the average number of respondents that will file a request for an extension of time to file an Owner's Dam Safety Program submittal will equal the average number of respondents that filed such a request from January 1, 2013, through December 31, 2019.

TABLE 1—ANNUAL BURDEN AND DIRECT COST CHANGES RESULTING FROM THE FINAL RULE—Continued IN DOCKET NO. RM20–9–000 [135]

Type of respondent	Type of response	Number of respondents	Average number of annual responses per respondent	Average annual burden hours and cost per response	Total number of annual responses (Col. C × Col. D)	Total annual burden hours and cost (Col. E × Col. F)
A.	B.	C.	D.	E.	F.	G.
Licensee of a Large Program [152] with a High or Significant Hazard Potential Dam or Other Project Work.	ODSP Document	[153] 45	[154] 0.2	[155] 120 hrs.; $10,440.	9	1080 hrs.; $93,960.
Licensee with a High or Significant Hazard Potential Dam or Other Project Work.	ODSP Document Revisions	[156] 225	1	6 hrs.; $522	225	1350 hrs.; $117,450.
Licensee with a High or Significant Hazard Potential Dam or Other Project Work.	ODSP External Audit or Peer Review Qualification Statement.	[157] 225	[158] 0.2	2 hrs.; $174	45	90 hrs.; $7,830.
Licensee of Small Program with a High or Significant Hazard Potential Dam or Other Project Work.	ODSP External Audits or Peer Review Report.	[159] 180	0.2	2 hrs.; $174	36	72 hrs.; $6,264.
Licensee of Large Program with a High or Significant Hazard Potential Dam or Other Project Work.	ODSP External Audits or Peer Review Report.	[160] 45	0.2	2 hrs.; $174	9	18 hrs.; $1,566.
Licensee with a High or Significant Hazard Potential Dam or Other Project Work.	ODSP Extension of Time Request.	[161] 5	1	4 hrs.; $348	5	20 hrs.; $1,740.
Totals		1,730			589	5,110.5 hrs.; $444,613.50.

173. Table 2 itemizes the estimated annual burden and annual contracting costs for professional services [162] of the information collections that are affected by this final rule. Record keeping requirements are included in the burden and cost estimates for the development and collection of the data and reports. The final rule's cost estimates for professional services have been updated to reflect 2021 dollars.

[162] Contracting costs include costs for professional services, including labor, travel and subsistence, and other indirect costs incurred by the contractor or consultant. Contracting costs do not include direct costs incurred by the applicant or licensee in the administration or execution of the contract for professional services; those are included in the previous table, as applicable.

[163] As defined by 18 CFR 12.1(a)(2).

[164] As defined by 18 CFR 12.1(a)(1) and (a)(3).

[165] Revisions of 18 CFR 12.10(b)(1), (b)(2), and (b)(4) for written reports of project-related deaths, serious injuries, or rescues at project works or involving project operations.

[166] Includes contracting costs for professional services associated with the preparation and submittal of Independent Consultant Team Proposals (18 CFR 12.34) and Reports for Periodic Inspections and Comprehensive Assessments (18 CFR 12.36 and 12.38).

[167] Approximately 750 project developments licensed by the Commission will be subject to the reporting requirement changes resulting from this final rule. This table defines a single response as the consolidated filings associated with the typical 10-year cycle for Independent Consultant's Safety Inspections, which would take effect following implementation of a final rule. A single response includes one each of the reports and other filings required under the scope of a Periodic Inspection and a Comprehensive Assessment. Thus, the total number of responses over a 10-year period will be the number of projects (750), divided equally between the ''Simple'' and ''Complex'' categories of hydroelectric facilities.

[168] As previously noted, this table defines a single response as the consolidated filings associated with the typical 10-year cycle for Independent Consultant's Safety Inspections. Therefore, the number of annual responses is averaged over the 10-year period, or 0.1 responses on average per year.

[169] Burden costs include hourly wages estimated based on complexity of project, scope of inspection, experience and number of assigned staff, and were compared to industry estimates provided by fewer than nine industry representatives. 2020 cost information escalated by five percent to 2021 costs.

[170] *See supra* note 165.

[171] *See supra* note 168.

[172] 18 CFR 12.33(a) includes a provision for licensees to submit a written request to be excluded from the requirements of subpart D.

[173] Commission staff assumes the number of respondents that will file an Owner's Dam Safety Program statement of qualification for external audit or peer review will equal the number of respondents that filed an original statement of qualification for external audit or peer review over the period from January 1, 2013, through December 31, 2019.

[174] The number of annual responses is averaged over the five-year period, or 0.2 responses on average per year.

[175] Commission staff assumes the number of respondents that will file an Owner's Dam Safety report of audit or peer review will equal the number of respondents who filed an original Owner's Dam Safety Program report of audit or peer review over the period from January 1, 2013, through December 31, 2019. Commission staff estimates that 80% of the respondents are from small programs. Thus, the total number of responses (225) times 0.8 is the number of responses from licensees from small programs.

[176] Burden costs include hourly wages estimated based on complexity of project, size of program, and scope based on Commission staff estimate.

[177] Commission staff assumes the number of respondents who will file an Owner's Dam Safety report of external audit or peer review will equal the number of respondents that filed an original Owner's Dam Safety Program report of external audit or peer review over the period from January 1, 2013, through December 31, 2019. Commission staff estimates that 20% of the respondents are from large programs. Thus, the total number of responses (225) times 0.2 is the number of responses from licensees from large programs.

TABLE 2—ANNUAL BURDEN AND CONTRACTING COST FOR PROFESSIONAL SERVICES CHANGES RESULTING FROM THE FINAL RULE IN DOCKET NO. RM20–9–000

Type of respondent A.	Type of response B.	Number of respondents C.	Average number of annual responses per respondent D.	Average annual burden hours and cost per response E.	Total number of annual responses (Col. C × Col. D) F.	Total annual burden hours and cost (Col. E × Col. F) G.
Applicant [163] or Licensee [164]	Reports of Project-Related Deaths, Serious Injuries, or Rescues [165].	There are no anticipated costs for contracted professional services affected by this final rule.				
Licensee of Simple Hydro Facility	Ind. Cons. Team Proposals and Reports on PIs and CAs [166].	[167] 375	[168] 0.1	12 hrs.; [169] $2,651.	37.5	450 hrs.; $99,412.50.
Licensee of Complex Hydro Facility.	Ind. Cons. Team Proposals and Reports on PIs and CAs [170].	375	0.1	32 hrs.; [171] $7,329.	37.5	1,200 hrs.; $274,837.50.
Licensee	Exemption Requests [172]	There are no anticipated costs for contracted professional services affected by this final rule.				
Licensee of a Small Program with a High or Significant Hazard Potential Dam or Other Project Work.	ODSP Document	There are no anticipated costs for contracted professional services affected by this final rule change.				
Licensee of a Large Program with a High or Significant Hazard Potential Dam or Other Project Work.	ODSP Document	There are no anticipated costs for contracted professional services affected by this final rule change.				
Licensee with a High or Significant Hazard Potential Dam or Other Project Work.	ODSP Document Revisions	There are no anticipated costs for contracted professional services affected by this final rule change.				
Licensee with a High or Significant Hazard Potential Dam or Other Project Work.	ODSP External Audit or Peer Review Qualification Statement.	[173] 225	[174] 0.2	6 hrs; $522	45	270 hrs; $23,490.
Licensee of a Small Program with a High or Significant Hazard Potential Dam or Other Project Work.	ODSP External Audit or Peer Review Report.	[175] 180	0.2	60 [176] hrs; $15,750.	36	2160 hrs; $567,000.
Licensee of a Large Program with a High or Significant Hazard Potential Dam or Other Project Work.	ODSP External Audits or Peer Review Report.	[177] 45	0.2	240 hrs; $75,600.	9	2160 hrs; $680,400.
Licensee with a High or Significant Hazard Potential Dam or Other Project Work.	ODSP Extension of Time Request.	There are no anticipated costs for contracted professional services affected by this final rule change.				
Totals		1200			165	6,240 hrs.; $1,645,140

174. Table 3 itemizes the estimated annual burden and total cost (direct costs [from Table 1] and costs for contracted professional services [from Table 2]), of the changes due to this final rule. Record keeping requirements are included in the burden and cost estimates for the development and collection of the data and reports.

TABLE 3—TOTAL ANNUAL BURDEN AND COST CHANGES RESULTING FROM THE FINAL RULE IN DOCKET NO. RM20–9–000

Type of respondent A.	Type of response B.	Number of respondents C.	Average number of annual responses per respondent D.	Average annual burden hours and cost per response E.	Total number of annual responses (Col. C × Col. D) F.	Total annual burden hours and cost (Col. E × Col. F) G.
Applicant [178] or Licensee [179]	Reports of Project-Related Deaths, Serious Injuries, or Rescues [180].	65	2.14	2 hrs.; $174	139	278 hrs.; $24,186.
Licensee of Simple Hydro Facility [181].	Ind. Cons. Team Proposals and Reports on PIs and CAs [182].	375	0.1	12 hrs.; $2,651	37.5	450 hrs.; $99,412.50.
Licensee of Complex Hydro Facility [183].	Ind. Cons. Team Proposals and Reports on PIs and CAs.	375	0.1	32.6 hrs.; $7,381.20.	37.5	1,222.5 hrs.; $276,795.
Licensee	Exemption Requests [184]	10	1	2 hrs.; $174	10	20 hrs.; $1,740.

[178] As defined by 18 CFR 12.1(a)(2).

[179] As defined by 18 CFR 12.1(a)(1) and (a)(3).

[180] Revisions of 18 CFR 12.10(b)(1), (b)(2), and (b)(4) for written reports of project-related deaths, serious injuries, or rescues at project works or involving project operations.

[181] Includes direct and contracting burden and cost.

[182] Includes direct costs associated with the preparation and submittal of Independent Consultant Team Proposals (18 CFR 12.34) and Reports for Periodic Inspections and Comprehensive Assessments (18 CFR 12.36 and 12.38).

[183] Includes direct and contracting burden and cost.

[184] 18 CFR 12.33(a) includes a provision for Licensees to submit a written request to be excluded from the requirements of subpart D.

[185] Includes direct and contracting burden and cost.

[186] Includes direct and contracting burden and cost.

[187] Includes direct and contracting burden and cost.

TABLE 3—TOTAL ANNUAL BURDEN AND COST CHANGES RESULTING FROM THE FINAL RULE IN DOCKET NO. RM20–9–000—Continued

Type of respondent	Type of response	Number of respondents	Average number of annual responses per respondent	Average annual burden hours and cost per response	Total number of annual responses (Col. C × Col. D)	Total annual burden hours and cost (Col. E × Col. F)
A.	B.	C.	D.	E.	F.	G.
Licensee of a Small Program with a High or Significant Hazard Potential Dam or Other Project Work.	ODSP Document	180	0.2	60 hrs.; $5,220	36	2160 hrs.; $187,920.
Licensee of a Large Program with a High or Significant Hazard Potential Dam or Other Project Work.	ODSP Document	45	0.2	120 hrs.; $10,440.	9	1080 hrs.; $93,960.
Licensee with a High or Significant Hazard Potential Dam or Other Project Work.	ODSP Document Revisions	225	1	6 hrs.; $522	225	1350 hrs.; $117,450.
Licensee with a High or Significant Hazard Potential Dam or Other Project Work [185].	ODSP External Audit or Peer Review Qualification Statement.	225	0.2	8 hrs.; $696	45	360 hrs; $31,320.
Licensee of a Small Program with a High or Significant Hazard Potential Dam or Other Project Work [186].	ODSP External Audits or Peer Review Report.	180	0.2	62 hrs.; $15,924	36	2232 hrs.; $573,264.
Licensee of a Large Program with a High or Significant Hazard Potential Dam or Other Project Work [187].	ODSP External Audit or Peer Review Report.	45	0.2	242 hrs.; $75,774.	9	2178 hrs.; $681,966.
Licensee with a High or Significant Hazard Potential Dam or Other Project Work.	ODSP Extension of Time Request.	5	1	4 hrs.; $348	5	20 hrs.; $1,740.
Total Direct Costs & Contracting Costs due to Final Rule in RM20–9–000 & AD20–20, –21, –22, & –23.		1730			589	11,350.5 hrs.; $2,089,753.50.

175. *Title:* FERC–517, Safety of Water Power Projects and Project Works.

176. *Action:* Revision to the scope of independent consultant safety inspections and reports, codification of the Owner's Dam Safety Program, and addition of reporting requirements related to public safety incidents at hydroelectric projects.

177. *OMB Control No.:* 1902–TBD.

178. *Respondents:* Hydroelectric licensees (and applicants, as applicable), including municipalities, businesses, private citizens, and for-profit and not-for-profit institutions.

179. *Frequency of Information:* On occasion, except for reports on periodic inspections and comprehensive assessment, which must be submitted under 18 CFR 12.40:

- For any project that was inspected in accordance with 18 CFR part 12 prior to January 1, 2022, a periodic inspection or comprehensive assessment must be completed, and a report on it filed, within five years of the due date of the most recent report. In addition, the first comprehensive assessment must be completed, and the report on it filed, by December 31, 2038.
- A licensed project development is subject to a different set of deadlines if the development was not inspected in accordance with 18 CFR part 12 prior to January 1, 2022, under the Commission's rules in effect on January 1, 2020. In these circumstances, the first comprehensive assessment and the report on it are due:
  - Not later than two years after the date of issuance of the order licensing a development or amending a license to include that development, if the development meets the criteria specified in §§ 12.30(a)(1) or 12.30(a)(2), and was constructed before the date of issuance of such order.
  - Not later than five years after the date of issuance of the order licensing that development, or amending a license to include that development, if the development was constructed after the date of issuance of such order.
  - No later than two years after a date specified by the Regional Engineer, for other developments that were not inspected prior to January 1, 2022, under the Commission's rules in effect on January 1, 2020.

180. *Necessity of Information:* The revisions in this final rule are necessary to enhance the ability of Commission staff to protect the safety of dams and the public; to reduce the risk to life, health, and property associated with hydroelectric projects; and to comply with guidance from FEMA's Interagency Committee on Dam Safety.

181. *Internal Review:* The Commission has reviewed the revisions and has determined that they are necessary. These requirements conform to the Commission's need for efficient information collection, communication, and management within the energy industry. The Commission has specific, objective support for the burden estimates associated with the information collection requirements.[188]

182. Interested persons may obtain information on the reporting requirements by contacting the Federal Energy Regulatory Commission at one of the following methods:

- *USPS:* Federal Energy Regulatory Commission, Ellen Brown, Office of the Executive Director, 888 First Street NE, Washington, DC 20426.
- *Hard copy communication other than USPS:* Federal Energy Regulatory Commission, Ellen Brown, Office of the Executive Director, 12225 Wilkins Avenue, Rockville, Maryland 20852.
- *Email: DataClearance@ferc.gov.*
- *Phone:* (202) 502–8663, or by fax: (202) 273–0873.

183. Please send comments concerning the collection of information and the associated burden estimates to: Office of Information and Regulatory Affairs, Office of Management and Budget [Attention: Federal Energy Regulatory Commission Desk Officer]. Due to security concerns, comments should be sent directly to

[188] Commission staff contacted fewer than nine parties to obtain supporting information in order to benchmark burden estimates.

www.reginfo.gov/public/do/PRAMain. Comments submitted to OMB should be sent within 30 days of publication of this notice in the **Federal Register** and refer to FERC–517 and OMB Control No. 1902–TBD.

B. Environmental Analysis

184. The Commission is required to prepare an environmental assessment or an environmental impact statement for any action that may have a significant effect on the human environment.[189] Excluded from this requirement are rules that are clarifying, corrective, or procedural, or that do not substantially change the effect of legislation or the regulations being amended.[190] This final rule revises the Commission's dam safety regulations by incorporating a two-tier structure for independent consultant safety inspections, codifying guidance requiring licensees to develop an owner's dam safety program and a public safety plan; expanding the scope of public safety incident reporting; and incorporating various minor revisions. Because this final rule does not substantially change the effect of the Commission's part 12 regulations, preparation of an environmental assessment or environmental impact statement is not required.

C. Regulatory Flexibility Act

185. The Regulatory Flexibility Act of 1980 (RFA)[191] generally requires a description and analysis of final rules that will have significant economic impact on a substantial number of small entities. The RFA mandates consideration of regulatory alternatives that accomplish the stated objectives of a final rule and minimize any significant economic impact on a substantial number of small entities.[192] In lieu of preparing a regulatory flexibility analysis, an agency may certify that a final rule will not have a significant economic impact on a substantial number of small entities.[193]

186. The Small Business Administration's (SBA) Office of Size Standards develops the numerical definition of a small business.[194] The SBA size standard for electric utilities is based on the number of employees, including affiliates.[195] Under SBA's current size standards, a hydroelectric power generator (NAICS code 221111)[196] is small if, including its affiliates, it employs 500 or fewer people.[197]

187. The final rule's revisions to part 12, subpart D would directly affect all licensees that are currently required to file independent consultant safety inspection reports. Since the number of licensed projects per respondent varies from one to more than 50, the number of respondents does not correlate directly to the number of responses. Based on data over the preceding 10-year-period, Commission staff estimated the expected number of responses from entities that qualify as small. In total, approximately 132 entities qualify as small and would be expected to file approximately 225 responses (30%) with the Commission over the 10-year cycle. The remaining 525 responses (70%) would be filed by 106 entities that do not qualify as small.

188. The Commission notes that the projects owned by entities that qualify as small entities are typically smaller and/or less complex than those owned by large entities. Thus, the annual incremental cost to small entities would likely skew towards the ''Simple Hydroelectric Facility'' category presented in the burden estimates provided above in the Information Collection Statement section.[198] In addition, this final rule incorporates provisions that grant Commission staff the authority, upon demonstration by the licensee and Commission review and acceptance of appropriate justification, to waive or reduce the scope of specific components of an independent consultant safety inspection (*e.g.,* waiving the requirement to perform a Potential Failure Mode Analysis or risk analysis) or to change the type of inspection report (*e.g.,* by allowing an inspection scheduled as a comprehensive assessment to be performed instead as a periodic inspection). The Commission has included these provisions to focus effort on those projects that present greater risk to life, health, and property, and to alleviate the potential economic impact on licensees of simple projects that present less risk. Since the burden estimates include all components of an independent consultant safety inspection, utilization of these provisions may result in a lower incremental cost for small entities.

189. The addition of part 12, subpart F, which codifies the Owner's Dam Safety Program, would apply only to entities that are responsible for one or more projects classified as having a high hazard potential. The Commission expects the Owner's Dam Safety Program to improve communication and understanding within licensee organizations as to their responsibilities for ensuring dam safety and protection of the public, and may contribute to an increased likelihood that preventable dam safety issues are caught and addressed before they present an imminent danger to life safety or property. Because those licensees required to prepare an Owner's Dam Safety Program due to their project's hazard potential classification have already done so,[199] the Commission does not anticipate that the addition of subpart F will be unduly burdensome on licensees, regardless of their status as a small or large entity.

190. With respect to the filing of public safety incidents involving the rescue of any person at a hydroelectric facility, the Commission estimates that most affected entities qualify as small entities. But, as reflected in the burden and cost estimates provided above, the Commission expects an additional two burden hours (and corresponding $166, an amount that would not be considered significant) for licensees or applicants, regardless of their status as small or large.

191. While the revisions to subpart D may have some increased economic impact on a limited number of small entities, these improvements to the independent consultant safety inspection process are necessary, and the associated costs justified, by the Commission's Congressionally-mandated mission to ensure the protection of life, health, and property from risks associated with licensed hydroelectric facilities. In addition, the revisions to subpart D are intended to help prevent future dam safety incidents that could potentially result in significant economic impacts on small entities (*e.g.,* financial costs associated with causing life loss or property damage, major project repairs, lost revenue due to the inability to operate the project, etc.).

192. In summary, based on the estimated costs included in Table 3 above, the estimated economic impacts on small entities as a result of the final

[189] *Regulations Implementing the National Environmental Policy Act of 1969,* Order No. 486, 52 FR 47897 (Dec. 17, 1987), FERC Stats. & Regs. ¶ 30,783 (1987) (cross-referenced at 41 FERC ¶ 61,284).

[190] 18 CFR 380.4(a)(2)(ii) (2021).

[191] 5 U.S.C. 601–612.

[192] *Id.* 603(c).

[193] *Id.* 605(b).

[194] 13 CFR 121.101 (2021).

[195] *Id.* 121.201.

[196] The North American Industry Classification System (NAICS) is an industry classification system that Federal statistical agencies use to categorize businesses for the purpose of collecting, analyzing, and publishing statistical data related to the U.S. economy. United States Census Bureau, *North American Industry Classification System, https://www.census.gov/eos/www/naics/.*

[197] 13 CFR 121.201 (Sector 22—Utilities).

[198] *See* discussion and accompanying tables *supra* Part V.A.

[199] *See supra* P 155.

rule could range from approximately $174 (for the submittal of a one-time request for an exemption from part 12, subpart D) to over $7,380 per year for each complex project. A representative cost for a typical small entity with one or more simple projects would be approximately $2,650 per year per project subject to part 12, subpart D.[200] Commission staff estimates that over 80% of the small entities have two or fewer projects subject to subpart D. The above estimates do not include the burden and cost associated with the Owner's Dam Safety Program as those licensees required to prepare an Owner's Dam Safety Program have already done so. Generally, however, the estimated costs associated with the Owner's Dam Safety Program for small entities could range from approximately $3,850 per year for a small program to approximately $15,825 per year for a large program. Commission staff estimates that ninety percent of the small entities have small programs.

193. Accordingly, pursuant to section 605(b) of the RFA, the Commission certifies that this final rule will not have a significant economic impact on a substantial number of small entities.

D. Document Availability

194. In addition to publishing the full text of this document in the **Federal Register**, the Commission provides all interested persons an opportunity to view and print the contents of this document via the internet through the Commission's Home Page (*http://www.ferc.gov*). At this time, the Commission has suspended access to the Commission's Public Reference Room due to the President's March 13, 2020 proclamation declaring a National Emergency concerning the Novel Coronavirus Disease (COVID–19).

195. From the Commission's Home Page on the internet, this information is available on eLibrary. The full text of this document is available on eLibrary in PDF and Microsoft Word format for viewing, printing, and/or downloading. To access this document in eLibrary, type the docket number excluding the last three digits of this document in the docket number field.

196. User assistance is available for eLibrary and the Commission's website during normal business hours from the Commission's Online Support at (202) 502–6652 (toll free at 1–866–208–3676) or email at *ferconlinesupport@ferc.gov,* or the Public Reference Room at (202) 502–8371, TTY (202) 502–8659. Email the Public Reference Room at *public.referenceroom@ferc.gov.*

E. Effective Date and Congressional Notification

197. These regulations are effective April 11, 2022. The Commission has determined, with the concurrence of the Administrator of the Office of Information and Regulatory Affairs of OMB, that this rule is not a major rule as defined in section 251 of the Small Business Regulatory Enforcement Fairness Act of 1996.[201] This rule is being submitted to the Senate, House, Government Accountability Office, and Small Business Administration.

List of Subjects in 18 CFR Part 12

Electric power, Reporting and recordkeeping requirements, Safety.

By direction of the Commission. Commissioner Phillips is not participating.

Issued: December 16, 2021.

Debbie-Anne A. Reese,

Deputy Secretary.

In consideration of the foregoing, the Federal Energy Regulatory Commission amends part 12, chapter I, title 18, Code of Federal Regulations, as follows:

PART 12—SAFETY OF WATER POWER PROJECTS AND PROJECT WORKS

■ 1. The authority citation for part 12 is revised to read as follows:

Authority: 16 U.S.C. 791a-825r; 42 U.S.C. 7101–7352.

Subpart A—General Provisions

■ 2. Amend § 12.3 by:
■ a. Revising paragraphs (b)(3), (b)(4) introductory text, and (b)(4)(ii), (v), and (xi);
■ b. Redesignating paragraph (b)(4)(xiii) as (b)(4)(xix);
■ c. Adding a new paragraph (b)(4)(xiii);
■ d. Redesignating paragraph (b)(11) as (b)(14);
■ e. Adding new paragraph (b)(11), (12) and (13).

The revisions and additions read as follows:

§ 12.3 Definitions.

* * * * *

(b) * * *

(3) *Authorized Commission representative* means the Director of the Office of Energy Projects, the Director of the Division of Dam Safety and Inspections, the Regional Engineer, or any other member of the Commission staff whom the Commission may specifically designate.

(4) *Condition affecting the safety of a project or project works* means any condition, event, or action at the project which might compromise the safety, stability, or integrity of any project work or the ability of any project work to function safely for its intended purposes, including navigation, water power development, or other beneficial public uses, including recreation; or which might otherwise adversely affect life, health, or property. Conditions affecting the safety of a project or project works include, but are not limited to:

* * * * *

(ii) Failure of, misoperation of, or failure to operate when attempted any facility that controls the release or storage of impounded water, such as a gate or a valve;

* * * * *

(v) Internal erosion, piping, slides, or settlements of materials in any dam, foundation, abutment, dike, or embankment;

* * * * *

(xi) Security incidents (physical and/or cyber);

* * * * *

(xiii) Overtopping of any dam, abutment, or water conveyance;

* * * * *

(11) *Water conveyance* means any canal, penstock, tunnel, flowline, flume, siphon, or other project work, constructed or natural, which facilitates the movement of water for the generation of hydropower, environmental benefit, or other purpose required by the project license.

(12) *Owner's Dam Safety Program* means the written document that formalizes a licensee's dam safety program, including, but not limited to, the licensee's dam safety policies; objectives; expectations; responsibilities; training program; communication, coordination, and reporting; record keeping; succession planning; continuous improvement; and audits and assessments.

(13) *Hazard potential* for any dam or water conveyance is a classification based on the potential consequences in the event of failure or misoperation of the dam or water conveyance, and is subdivided into categories (*e.g.,* Low, Significant, High).

(i) *High hazard potential* generally indicates that failure or misoperation will probably cause loss of human life.

(ii) *Significant hazard potential* generally indicates that failure or misoperation will probably not cause loss of human life but may have some amount of economic, environmental, or other consequences.

[200] Commission staff estimates that more than half of the 132 small entities have one or more simple projects and no complex projects.

[201] 5 U.S.C. 804(2).

(iii) *Low hazard potential* generally indicates that failure or misoperation will probably not cause loss of human life but may have some amount of economic, environmental, or other consequences, typically limited to project facilities.

* * * * *

■ 3. Amend § 12.4 by:

■ a. Revising paragraphs (b)(1)(i), (b)(2)(ii)(B), and (b)(2)(iii)(A) and (B);

■ b. Adding paragraphs (b)(2)(iii)(C) and (D);

■ c. Adding paragraphs (b)(2)(iii)(C) and (D);

■ d. Revising paragraphs (c)(1), (c)(2) introductory text, and (c)(3); and

■ e. Adding paragraph (d).

The revisions and addition read as follows:

§ 12.4 Staff administrative responsibility and supervisory authority.

* * * * *

(b) * * *

(1) * * *

(i) Achieving or protecting the safety, stability, security, and integrity of the project works or the ability of any project work to function safely for its intended purposes, including navigation, water power development, or other beneficial public uses; or

(ii) * * *

(2) * * *

(ii) * * *

(B) Any condition affecting the safety of a project or project works or any death, serious injuries, or rescues that occur at, or might be attributable to, the water power project;

(iii) * * *

(A) Any emergency action plan filed under subpart C of this part;

(B) Any Owner's Dam Safety Program filed under subpart F of this part;

(C) Any plan of corrective measures, including related schedules, submitted after the report of an independent consultant pursuant to § 12.36 or § 12.38 or any other inspection report; or

(D) Any public safety plan filed under § 12.52(b).

* * * * *

(c) * * *

(1) Any order or directive issued under this part by a Regional Engineer or other authorized Commission representative may be appealed to the Commission under § 385.207 of this chapter.

(2) Any order or directive issued under this part by a Regional Engineer or other authorized Commission representative is immediately effective and remains in effect until:

* * * * *

(3) An appeal or motion for rescission, amendment, or stay of any order or directive issued under this part must contain a full explanation of why granting the appeal or the request for rescission or amendment of the order or directive, or for stay for the period requested, will not endanger life, health, or property.

(d) *Failure to comply.* If a licensee fails to comply with any order or directive issued under this part by the Commission, a Regional Engineer, or other authorized Commission representative, the licensee may be subject to sanctions, including, but not limited to, civil penalties, orders to cease generation, or license revocation.

Subpart B—Reports and Records

■ 4. Amend § 12.10 by revising paragraph (a)(1), the first sentence of paragraph (a)(2), and paragraph (b) to read as follows:

§ 12.10 Reporting safety-related incidents.

(1) * * * *Initial reports.* An applicant or licensee must report by email or telephone to the Regional Engineer any condition affecting the safety of a project or projects works, as defined in § 12.3(b)(4). The initial report must be made as soon as practicable after that condition is discovered, preferably within 72 hours, without unduly interfering with any necessary or appropriate emergency repair, alarm, or other emergency action procedure.

(2) * * * Following the initial report required in paragraph (a)(1), the applicant or licensee must submit to the Regional Engineer a written report on the condition affecting the safety of the project or project works verified in accordance with § 12.13. * * *

* * * * *

(b) *Deaths, serious injuries, or rescues.* (1) *Initial reports.* An applicant or licensee must report to the Regional Engineer any drowning or other incident resulting in death, serious injury, or rescue that occurs at the project works or involves project operation. The initial report must be made promptly after the incident is discovered, may be provided via email or telephone, and must include a description of the cause and location of the incident.

(2) *Written reports.* Following the initial report required in paragraph (b)(1), the applicant or licensee must submit to the Regional Engineer a written report.

(i) For any death, serious injury, or rescue that is considered or alleged to be project-related, or occurs at the project works, the applicant or licensee must submit to the Regional Engineer a written report that describes any remedial actions taken or proposed to avoid or reduce the chance of similar occurrences in the future. The written report must be verified in accordance with § 12.13.

(ii) For any death that is not project-related, the applicant or licensee may report the death by providing a copy of an article from print or electronic media or a report from a law enforcement agency, if available.

(iii) Serious injuries and rescues that are not project-related do not require a written report.

(3) For the purposes of this paragraph (b), *project-related* includes any deaths, serious injuries, or rescues that:

(i) Involve a project dam, spillway, intake, outlet works, tailrace, power canal, powerhouse, powerline, other water conveyance, or other appurtenances;

(ii) Involve changes in water levels or flows caused by generating units, project gates, or other flow regulating equipment;

(iii) Involve a licensee employee, contractor, or other person performing work at a licensed project facility and are related in whole or in part to the work being performed; or

(iv) Are otherwise attributable to project works and/or project operations.

(5) For the purposes of this paragraph (b), *serious injury* includes any injury that results in treatment at a medical facility or a response by licensee staff or another trained professional.

■ 5. Amend § 12.12 by revising paragraphs (a)(1)(ii) and (b)(3) and adding paragraph (d) to read as follows:

§ 12.12 Maintenance of records.

(a) * * *

(1) * * *

(ii) Instrumentation observations and data collected during construction, operation, or maintenance of the project, including continuously maintained tabular records and graphs illustrating the data collected pursuant to § 12.51; and

* * * * *

(b) * * *

(3) In accordance with the provisions of part 125 of this chapter, the applicant or licensee may select its own storage media to maintain original records or record copies at the project site, provided that appropriate equipment is available to view the records.

* * * * *

(d) *Provision of records.* If the project is subject to subpart D of this part, or if requested by the Regional Engineer, the applicant or licensee must provide to the Regional Engineer physical and electronic copies of the documents

listed in paragraph (a)(1) of this section, except as provided in paragraph (a)(2) of this section.

Subpart C—Emergency Action Plans

§ 12.20 [Amended]

■ 6. Amend § 12.20 in paragraph (a) by removing the words ''three copies of''.

§ 12.22 [Amended]

■ 7. Amend § 12.22 as follows:

■ a. In paragraph (a)(1) introductory text, remove the phrase ''conform with the guidelines established, and from time to time revised, by the Director of the Office of Energy Projects (available from the division of Inspections or the Regional Engineer) to''; and

■ b. In paragraph (a)(2) introductory text, remove ''conforming with the guidelines established by the Director of the Office of Energy Projects''.

§ 12.24 [Amended]

■ 8. Amend § 12.24 in paragraph (c)(3) by removing the words ''three copies of''.

■ 9. Revise subpart D to read as follows:

Subpart D—Review, Inspection, and Assessment by Independent Consultant

Sec.

12.30 Applicability.
12.31 Definitions.
12.32 General inspection requirement.
12.33 Exemption.
12.34 Approval of independent consultant team.
12.35 Periodic inspection.
12.36 Report on a period inspection.
12.37 Comprehensive assessment.
12.38 Report on a comprehensive assessment.
12.39 Evaluation of spillway adequacy.
12.40 Time for inspections and reports.
12.41 Corrective measures.
12.42 Preliminary reports.

Subpart D—Review, Inspection, and Assessment by Independent Consultant

§ 12.30 Applicability.

This subpart D applies to any licensed project development that:

(a) Has a dam

(1) That is more than 32.8 feet (10 meters) in height above streambed, as defined in § 12.31(c); or

(2) With an impoundment gross storage capacity of more than 2,000 acre-feet (2.5 million cubic meters), as defined in § 12.31(d);

(b) Has a project work (dam or water conveyance) or any portion thereof that has a high hazard potential, as defined in § 12.3(b)(13)(i); or

(c) Is determined by the Regional Engineer or other authorized Commission representative to require inspection by an independent consultant under this subpart D.

§ 12.31 Definitions.

For purposes of this subpart D:

(a) *Independent consultant* means any person who:

(1) Is a licensed professional engineer;

(2) Has at least 10 years of experience and expertise in dam design and construction and in the investigation of the safety of existing dams;

(3) Is not an employee of the licensee or its affiliates;

(4) Has not been an employee of the licensee or its affiliates within two years prior to performing engineering and/or scientific services for an inspection or assessment under this subpart D; and

(5) Has not been an agent acting on behalf of the licensee or its affiliates, prior to performing engineering and/or scientific services for an inspection or assessment under this subpart D.

(b) An *independent consultant team* means a group of one or more people that:

(1) Includes at least one independent consultant, as defined in paragraph (a) of this section;

(2) Includes additional qualified engineering and scientific professionals as supporting team members, as needed, who meet the requirements of paragraphs (a)(3) through (5) of this section;

(3) Has demonstrable experience and expertise in dam design, construction, and the evaluation and assessment of the safety of existing dams and their appurtenances, commensurate with the scale, complexity, and relevant technical disciplines of the project and type of review, inspection, and assessment being performed (periodic inspection or comprehensive assessment, as defined in this section).

(c) *Height above streambed* means:

(1) For a dam with a spillway, the vertical distance from the lowest elevation of the natural streambed at the downstream toe of the dam to the maximum water storage elevation possible without any discharge from the spillway. The maximum water storage elevation is:

(i) For gated spillways, the elevation of the tops of the gates; and

(ii) For ungated spillways, the elevation of the spillway crest or the top of any flashboards, whichever is higher.

(2) For a dam without a spillway, the vertical distance from the lowest elevation of the natural streambed at the downstream tow of the dam to the lowest point on the crest of the dam.

(d) Gross storage capacity means the maximum possible volume of water impounded by a dam with zero spill, that is, without the discharge of water over the dam or a spillway.

(e) Periodic inspection means an inspection that meets the requirements of § 12.35 and is performed by an independent consultant team.

(f) Comprehensive assessment means a project review, inspection, and assessment that meets the requirements of § 12.37 and is performed by an independent consultant team.

(g) Previous Part 12D Inspection means the most recent inspection performed in accordance with the provisions of this subpart D (a periodic inspection, comprehensive assessment, or an inspection performed in accordance with the rules established by Order 122).

(h) Previous Part 12D Report means the report on the Previous Part 12D Inspection.

§ 12.32 General inspection requirement.

The project works of each development to which this subpart applies, excluding transmission and transformation facilities, must be inspected on a periodic basis by an independent consultant team to identify any actual or potential deficiencies that might endanger life, health, or property, including deficiencies that may be in the condition of those project works or in the quality or adequacy of project maintenance, safety, methods of operation, analyses, and other conditions. A report must be prepared by the independent consultant team, by or under the direction of at least one independent consultant, who may be a member of a consulting firm, to document the findings and evaluations made during their inspection. The inspection must be performed by the independent consultant team, and the report must be filed by the licensee, in accordance with the procedures in this subpart D. The licensee must ensure that the independent consultant team's report meets all of the requirements set forth in this subpart D.

§ 12.33 Exemption.

(a) Upon written request from the licensee, the Director of the Division of Dam Safety and Inspections may grant an exemption from the requirements of this subpart D in circumstances that clearly establish good cause for exemption.

(b) Good cause for exemption may include the finding that the development in question has no dam, canal, or other water conveyance except those that meet the criteria for low hazard potential as defined in § 12.3(b)(13)(iii).

(c) The Director of the Division of Dam Safety and Inspections, for good cause shown, may rescind any exemption from this subpart D granted by the Director, and may require that a comprehensive assessment be completed prior to considering a subsequent request for exemption from the licensee.

§ 12.34 Approval of independent consultant team.

(a) The licensee must obtain written approval of the independent consultant team, and the facilitator(s) for a potential failure mode analysis or risk analysis, from the Director of the Division of Dam Safety and Inspections, prior to the performance of a periodic inspection or comprehensive assessment under this subpart D.

(b) At least 180 days prior to performing a periodic inspection or comprehensive assessment under this subpart D, the licensee must submit to the Director of the Division of Dam Safety and Inspections, with a copy to the Regional Engineer, a detailed part 12D inspection plan that includes an independent consultant team proposal that describes the technical disciplines and level of expertise required to perform the inspection.

(1) If the independent consultant team comprises one person, the detailed independent consultant team proposal must:

(i) Describe the experience of the independent consultant; and

(ii) Show that the independent consultant meets the requirements as defined in §§ 12.31(a) and 12.31(b)(3).

(2) If the independent consultant team comprises more than one person, the detailed independent consultant team proposal must:

(i) Designate one or more persons to serve as independent consultant(s);

(ii) Describe the experience of each member of the independent consultant team;

(iii) Show that each independent consultant meets the requirements as defined in § 12.31(a);

(iv) Show that each member of the independent consultant team who is not designated as an independent consultant meets the requirements as defined in § 12.31(a)(3) through (5); and

(v) Show that the independent consultant team meets the requirements as defined in § 12.31(b)(3).

(3) If any member of the independent consultant team has performed or substantially contributed to any previous investigation, analysis, or other work product that is required to be reviewed and evaluated by the independent consultant team as part of the inspection being performed, the independent consultant team proposal must include a clear delineation of roles and responsibilities that ensures no team member will be responsible for reviewing and evaluating their own previous work.

(4) If required information about any supporting team member(s) is not available at the time the independent consultant team proposal is submitted to the Director of the Division of Dam Safety and Inspections, the independent consultant team proposal must state that the information will be provided in the preliminary report required by § 12.42.

(5) The 180-day period in paragraph (b) is measured from the scheduled date of the physical field inspection, potential failure mode analysis, or risk analysis, whichever occurs first.

(c) Regardless of experience and qualifications, any independent consultant may be disapproved by the Director of the Division of Dam Safety and Inspections for good cause, such as having had one or more reports on an inspection under this subpart D rejected by the Commission within the preceding five years.

(d) The Director of the Division of Dam Safety and Inspections may, for good cause shown, grant a waiver of the 10-year requirement in § 12.31(a)(2). Any petition for waiver under this paragraph must be filed in accordance with § 385.207 of this chapter.

§ 12.35 Periodic inspection.

A periodic inspection must include:

(a) *Review of prior reports.* The independent consultant team must review and consider all relevant reports on the safety of the development made by or written under the direction of Federal or state agencies, submitted under Commission regulations, or made by other consultants. The licensee must provide to the independent consultant team all information and reports necessary to fulfill the requirements of this section. The independent consultant team must perform sufficient review to have, at the time of the periodic inspection, a full understanding of the design, construction, performance, condition, upstream and downstream hazard, monitoring, operation, and potential failure modes of the project works.

(b) *Physical field inspection.* The independent consultant team must perform a physical field inspection of accessible project works, including galleries, adits, vaults, conduits, earthen and concrete-lined spillway chutes, the exterior of water conveyances, and other non-submerged project works that may require specialized access to facilitate inspection. The inspection shall include review and assessment of all relevant data concerning:

(1) Settlement;

(2) Movement;

(3) Erosion;

(4) Seepage;

(5) Leakage;

(6) Cracking;

(7) Deterioration;

(8) Hydraulics;

(9) Hydrology;

(10) Seismicity;

(11) Internal stress and hydrostatic pressures in project structures and their foundations and abutments;

(12) The condition and performance of foundation drains, dam body drains, relief wells, and other pressure-relief systems;

(13) The condition and performance of any post-tensioned anchors installed, and other major modifications completed, to improve the stability of project works;

(14) The stability of critical slopes adjacent to a reservoir or project works; and

(15) Regional and site geological conditions.

(c) *Review of surveillance and monitoring plan and data.* The independent consultant team must:

(1) Review the surveillance procedures, instrumentation layout, installation details, monitoring frequency, performance history, data history and trends, and relevance to potential failure modes; and

(2) Review the frequency and scope of other surveillance activities.

(d) *Review of dam and public safety programs.* The independent consultant team must review the programs specified in this paragraph.

(1) *Hazard potential.* The independent consultant team must review the potential inundation area and document any significant changes in the magnitude and location of the population at risk since the previous inspection under this subpart D.

(2) *Emergency Action Plan.* If the project development is subject to subpart C of this part, the independent consultant team must review the emergency action plan, including the emergency action plan document itself, the licensee's training program, and any related time-sensitivity assessment(s).

(3) *Public Safety Program.* The independent consultant team must review the public access restrictions and public safety warning signs and devices near the project works pursuant to § 12.52.

(4) *Owner's Dam Safety Program.* If the project is subject to subpart F of this part, the independent consultant team

must review the implementation of the licensee's Owner's Dam Safety Program with respect to the project development being inspected under this subpart D.

§ 12.36 Report on a periodic inspection.

(a) *Scope.* The report must include documentation of all the items listed in § 12.35.

(b) *Specific evaluation.* The report must include specific evaluation of:

(1) The history of performance of the project works through visual observations, analysis of data from monitoring instruments, and previous inspections;

(2) The quality and adequacy of maintenance, surveillance, methods of project operations, and risk reduction measures for the protection of public safety and continued project operation;

(3) Potential failure modes, including:

(i) Each identified potential failure mode associated with the project works and whether any potential failure mode is active or developing; and

(ii) Whether any inspection observations or other conditions indicate that an unidentified potential failure mode is active, developing, or is of sufficient concern to warrant development through a supplemental potential failure mode analysis;

(4) Whether any observed conditions warrant reconsideration of the current hazard potential classification; and

(5) The adequacy of the project's:

(i) Emergency action plan;

(ii) Public safety program; and

(iii) Implementation of the Owner's Dam Safety Program with respect to the project development being inspected under this subpart D.

(c) *Changes since the previous inspection.* The report must include a status update and evaluation of any changes since the Previous Part 12D Inspection concerning:

(1) *Hydrology.* Identify any events that may affect the conclusions of the hydrologic or hydraulic analyses of record and evaluate the effect on the safety and stability of project works.

(2) *Seismicity.* Identify any seismic events that may affect the conclusions of the seismicity analyses of record and evaluate the effect on the safety and stability of project works.

(3) *Modifications to project works.* Identify any modifications made to project works and evaluate the performance thereof with respect to the design intent.

(4) *Methods of operation.* Describe any changes to standard operating procedures, equipment available for project operation, and evaluate the effect on the safety and stability of project works.

(5) *Results of special inspections.* Summarize the findings of any special inspections (dive inspection, rope-access gate inspection, toe drain inspection, etc.), if any.

(6) *Previous recommendations.* List and document the status of recommendations made by the independent consultant(s) in the Previous Part 12D Report, and any earlier recommendations that remained incomplete at the time of the Previous Part 12D Report.

(7) *Outstanding studies and studies completed since the previous inspection.* List and document the status of any studies completed since the Previous Part 12D Inspection and those that remain outstanding at the time of the periodic inspection.

(d) *Recommendations.* Based on the independent consultant team's field observations, evaluations of the project works, and the maintenance, surveillance, and methods of operation of the development, the report must contain recommendations by the independent consultant(s) regarding:

(1) Any corrective measures, described in § 12.41, necessary for the structures, maintenance or surveillance procedures, or methods of operation of the project works;

(2) A reasonable time to carry out each corrective measure; and

(3) Any new or additional monitoring instruments, periodic observations, special inspections, or other methods of monitoring project works or conditions that may be required.

(e) *Dissenting views.* If the inspection and report were conducted and prepared by more than one independent consultant, the report must clearly identify and describe any dissenting views concerning the evaluations or recommendations of the report that might be held by any individual consultant.

(f) *List of participants.* The report must identify all professional personnel who have participated in the inspection of the project or in preparation of the report and the independent consultant(s) who directed those activities.

(g) *Statement of independence.* Each independent consultant responsible for the report must declare that all conclusions and recommendations in the report are made independently of the licensee, its employees, and its representatives.

(h) *Signature.* The report must be signed and sealed, with a professional engineer's seal, by each independent consultant responsible for the report.

§ 12.37 Comprehensive assessment.

A comprehensive assessment must include:

(a) *Review of prior reports and analyses of record.* The independent consultant team must review and consider all relevant reports on the safety of the development made by or written under the direction of Federal or state agencies, submitted under Commission regulations, or made by other consultants. The licensee must provide to the independent consultant team all information, reports, and analyses of record necessary to fulfill the requirements of this section.

(1) In addition to the requirements of § 12.35(a), the independent consultant team must have a full understanding of the risk associated with the project works.

(2) The independent consultant team shall perform a detailed review of the as-built drawings; monitoring data; and the methods, assumptions, calculations, results, and conclusions of the analyses of record pertaining to:

(i) Geology and seismicity;

(ii) Hydrology and hydraulics;

(iii) Stability and structural integrity of project works; and

(iv) Any other analyses relevant to the safety, stability, and operation of project works.

(b) *Physical field inspection.* The independent consultant team must perform a physical field inspection that complies with § 12.35(b).

(c) *Review of surveillance and monitoring plan and data.* The independent consultant team must perform a review of surveillance and monitoring plan and data that complies with § 12.35(c).

(d) *Review of dam and public safety programs.* The independent consultant team must perform a review of dam and public safety programs that complies with § 12.35(d).

(e) *Supporting Technical Information Document.* The comprehensive assessment shall include a review of the Supporting Technical Information Document.

(f) *Potential failure mode analysis.* The comprehensive assessment shall include a potential failure mode analysis.

(g) *Risk analysis.* The comprehensive assessment shall include a risk analysis. The Regional Engineer may, for good cause shown, grant a waiver of the requirement to complete a risk analysis. Any petition for waiver under this paragraph must be filed in accordance with § 385.207 of this chapter.

§ 12.38 Report on a comprehensive assessment.

(a) *Scope.* The comprehensive assessment report must include documentation of all the items listed in § 12.37.

(b) *Specific evaluation.* In addition to the items listed in § 12.36(b)(1) through § 12.36(b)(5), the comprehensive assessment report must evaluate:

(1) The adequacy of spillways, including the effects of overtopping of nonoverflow structures, as described in § 12.39;

(2) The structural adequacy and stability of structures under all credible loading conditions;

(3) The potential for internal erosion and/or piping of embankments, foundations, and abutments;

(4) The design and construction practices used during original construction and subsequent modifications, in comparison with the industry best practices in use at the time of the inspection under this subpart D;

(5) The adequacy of the Supporting Technical Information Document and the attached electronic records; and

(6) The adequacy and findings of the potential failure mode analysis and risk analysis report(s).

(c) *Analyses of record.* The comprehensive assessment report must include the independent consultant team's evaluation of the assumptions, methods, calculations, results, and conclusions of the items listed in § 12.37(a)(2)(i) through (iv). The evaluation must:

(1) Address the accuracy, relevance, and consistency with the current state of the practice of dam engineering;

(2) Be accompanied by sufficient documentation of the independent consultant team's rationale, including, as needed, new calculations by the independent consultant team to verify that the assumptions, methods, calculations, results, and conclusions in the analyses of record are correct; and

(3) If the independent consultant team is unable to review the analyses of record for any of the items listed in § 12.37(a)(2)(i) through (iv); or if the independent consultant team disagrees with the assumptions, methods, calculations, results, or conclusions therein; the independent consultant(s) must recommend that the licensee complete new analyses to address the identified concerns.

(d) *Changes since the previous inspection.* The requirements of this section are the same as described in § 12.36(c).

(e) *Recommendations.* The requirements of this section are the same as described in § 12.36(d).

(f) *Dissenting views.* The requirements of this section are the same as described in § 12.36(e).

(g) *List of participants.* The requirements of this section are the same as described in § 12.36(f).

(h) *Statement of independence.* The requirements of this section are the same as described in § 12.36(g).

(i) *Signature.* The requirements of this section are the same as described in § 12.36(h).

§ 12.39 Evaluation of spillway adequacy.

The adequacy of any spillway must be evaluated, as part of a comprehensive assessment or as otherwise requested by the Regional Engineer, by considering hazard potential which would result from failure of the project works during normal and flood flows.

(a) If failure would present a hazard to human life or cause significant property damage, the independent consultant team must evaluate the following for floods up to and including the probable maximum flood:

(1) The ability of project works to withstand the loading or overtopping which may occur during floods;

(2) The capacity of spillways to prevent the reservoir from rising to an elevation that would endanger the project works; and

(3) The potential for misoperation of; failure to operate; blockage of; or debilitating damage to a spillway and its appurtenances (including but not limited to structural, mechanical, and electrical components of gates, valves, chutes, and training walls); and the effect thereof on the maximum reservoir level and potential for surcharged loading or overtopping to occur during floods.

(b) If failure would not present a hazard to human life or cause significant property damage, spillway adequacy may be evaluated by means of a design flood of lesser magnitude than the probable maximum flood provided that the most recent comprehensive assessment report required by § 12.38 provides a detailed explanation of and rationale for the finding that structural failure would not present a hazard to human life or cause significant property damage.

§ 12.40 Time for inspections and reports.

(a) *Projects previously inspected by independent consultant.* For any project that was inspected under this subpart D prior to April 11, 2022, under the Commission's rules in effect on January 1, 2022:

(1) A periodic inspection or comprehensive assessment must be completed, and the report on it filed, within five years of the due date of the Previous Part 12D Report.

(2) For any report due to be filed under this subpart D after October 11, 2023, the Regional Engineer may require that it be a report on a comprehensive assessment or a report on a periodic inspection.

(3) The first comprehensive assessment under this subpart must be completed, and the report on it filed, by December 31, 2038.

(b) *Projects not previously inspected by independent consultant.* For any project that was not inspected under this subpart D prior to April 11, 2022, under the Commission's rules in effect on January 1, 2022:

(1) For any development that meets the criteria specified in § 12.30(a)(1) or § 12.30(a)(2), and was constructed before the date of issuance of the order licensing that development, or amending a license to include that development, the first comprehensive assessment under this subpart D must be completed, and the report on it filed, not later than two years after the date of issuance of the order licensing that development or amending the license to include that development.

(2) For any development that was constructed after the date of issuance of the order licensing that development, or amending a license to include that development, the first comprehensive assessment under this subpart D must be completed, and the report on it filed, not later than five years after the date of issuance of the order licensing that development or amending the license to include that development.

(3) For any development not set forth in either paragraph (b)(1) or (b)(2) of this section, the first comprehensive assessment under this subpart D must be completed, and the report on it filed, by a date specified by the Regional Engineer. The filing date must not be more than two years after the date of notification that a comprehensive assessment and report under this subpart D are required.

(c) *Subsequent inspections and reports.* For subsequent reports filed under this subpart D:

(1) A comprehensive assessment must be completed, and the report on it filed, within 10 years of the date the previous comprehensive assessment report was due to be filed.

(2) A periodic inspection must be completed, and the report on it filed, within five years of the date the previous comprehensive assessment report was due to be filed.

(d) *Extension of time.* For good cause shown, the Regional Engineer may extend the time for filing the report on

a comprehensive assessment or periodic inspection under this subpart D.

(e) *Type of Report.* For good cause, the Regional Engineer may require that any report due to be filed under this subpart D be a report on a comprehensive assessment or a report on a periodic inspection, notwithstanding the type of review (periodic inspection or comprehensive assessment) scheduled to be performed under paragraphs (c)(1) and (c)(2) of this section.

§ 12.41 Corrective measures.

(a) *Corrective measures.* For items identified during a periodic inspection or comprehensive assessment as requiring corrective action, the following conditions apply:

(1) *Corrective plan and schedule.* (i) Not later than 60 days after a report on a periodic inspection or comprehensive assessment is filed with the Regional Engineer, the licensee must submit to the Regional Engineer a plan and schedule for addressing the recommendations of the independent consultant(s) and for investigating, designing, and carrying out any corrective measures that the licensee proposes to implement.

(ii) The plan and schedule may include any proposal, including taking no action, that the licensee considers a preferable alternative to any corrective measure recommended in the report of the independent consultant(s). Any proposed alternative must be accompanied by the licensee's complete justification and detailed analysis and evaluation in support of that alternative.

(2) *Carrying out the plan.* The licensee must complete all corrective measures in accordance with the plan and schedule submitted to, and approved or modified by, the Regional Engineer, and on an annual basis must submit a status report on the corrective measures until all have been completed.

(3) *Extension of time.* For good cause shown, the Regional Engineer may extend the time for filing the plan and schedule required by this section.

(b) *Emergency corrective measures.* The licensee must provide that if, in the course of a periodic inspection or comprehensive assessment conducted under this subpart D, an independent consultant discovers any condition for which emergency corrective measures are advisable, such as a condition affecting the safety of a project or project works as defined in § 12.3(b)(4) of this part, the independent consultant must immediately notify the licensee and the licensee must report that condition to the Regional Engineer pursuant to § 12.10(a) of this part. Emergency corrective measures must be included in the corrective plan and schedule required by paragraph (a)(1) of this section, and are also subject to paragraphs (a)(2) and (a)(3) of this section.

§ 12.42 Preliminary reports.

At least 30 days prior to the performance of a periodic inspection or comprehensive assessment, a preliminary report prepared by the independent consultant team must be filed by the licensee with the Regional Engineer to document the initial findings, understanding, and preparation of the independent consultant team.

(a) For any periodic inspection, the 30-day period is measured from the scheduled date of the physical field inspection.

(b) For any comprehensive assessment, the 30-day period is measured from the scheduled date of the physical field inspection, potential failure mode analysis, or risk analysis, whichever occurs first.

(c) If the Regional Engineer determines that the preliminary report does not clearly demonstrate that the independent consultant team is adequately prepared for the inspection, the Regional Engineer may require the inspection to be postponed. Any such postponement shall not constitute good cause for an extension of time under § 12.40(d).

(d) If any required supporting team member information was not provided with the independent consultant team proposal required by § 12.34(b), it must be provided with the preliminary report.

Subpart E—Other Responsibilities of Applicant or Licensee

§ § 12.40 through 12.44 [Redesignated as §§ 12.50 through 12.54]

■ 10. Redesignate §§ 12.40 through 12.44 as §§ 12.50 through 12.54, respectively.

§ § 12.55 through 12.59 [Reserved]

■ 11. Add reserved §§ 12.55 through 12.59.

■ 12. Amend newly designated § 12.50 in paragraph (a) by removing ''§ 12.39'' and adding in its place ''§ 12.41''.

■ 13. Revise newly redesignated § 12.52 to read as follows:

§ 12.52 Warning and safety devices.

(a) To the satisfaction of, and within a time specified by the Regional Engineer, an applicant or licensee must install, operate, and maintain any signs, lights, sirens, barriers, or other safety devices that may reasonably be necessary or desirable to warn the public of fluctuations in flow from the project or otherwise to protect the public in the use of project lands and waters.

(b) The Regional Engineer may require the applicant or licensee to prepare, periodically update, and file with the Commission a public safety plan that formalizes the installation, operation, and maintenance of all necessary public safety devices.

§ 12.54 [Amended]

■ 14. Amend newly redesignated § 12.54 as follows:

■ a. In paragraph (b)(2), remove ''the periodic'' and add in its place ''an'' and add ''gate'' directly following the second appearance of the word ''spillway''; and

■ b. In paragraph (c)(2), remove ''the periodic'' and add in its place ''an''.

■ 15. Add subpart F, consisting of §§ 12.60 through 12.65, to read as follows:

Subpart F—Owner's Dam Safety Program

Sec.

12.60 Applicability.
12.61 Definitions.
12.62 General requirements.
12.63 Contents of Owner's Dam Safety Program.
12.64 Annual review and update of Owner's Dam Safety Program.
12.65 Independent external audit and peer review.

§ 12.60 Applicability.

The licensee of any dam or other project work classified as having a high or significant hazard potential, as defined in § 12.3(b)(13)(i) and (ii), is required to submit an Owner's Dam Safety Program to the Regional Engineer.

§ 12.61 Definitions.

For purposes of this subpart F:

(a) *Chief Dam Safety Engineer* means the designated individual, who is a licensed professional engineer with experience in dam safety, who oversees the implementation of the Owner's Dam Safety Program and has primary responsibility for ensuring the safety of the licensee's dam(s) and other project works.

(b) *Chief Dam Safety Coordinator* means the designated individual, who is not required to be a licensed professional engineer, who oversees the implementation of the Owner's Dam Safety Program and has primary responsibility for ensuring the safety of the licensee's dam(s) and other project works.

§ 12.62 General requirements.

(a) The Owner's Dam Safety Program shall designate either a Chief Dam Safety Engineer or Chief Dam Safety Coordinator, as defined in § 12.61. Any Owner's Dam Safety Program that includes one or more dams or other project works classified as having a high hazard potential, as defined in § 12.3(b)(13)(i), shall designate a Chief Dam Safety Engineer.

(b) The Owner's Dam Safety Program must be signed by the Owner and, as applicable, the Chief Dam Safety Engineer or the Chief Dam Safety Coordinator.

(c) The Owner's Dam Safety Program must be reviewed and updated on a periodic basis as described in § 12.64 and, if applicable, must undergo an independent external audit or peer review as described in § 12.65.

(d) The Owner may delegate to others, such as consultants, the work of establishing and implementing the Owner's Dam Safety Program and the role of Chief Dam Safety Engineer or Chief Dam Safety Coordinator, as applicable.

(1) If the role of Chief Dam Safety Engineer or Chief Dam Safety Coordinator is delegated to an outside party who does not oversee the day-to-day implementation of the Owner's Dam Safety Program, the Owner must designate an individual responsible for overseeing the day-to-day implementation.

(2) Any delegation made in accordance with paragraph (d) of this section must be documented in the Owner's Dam Safety Program.

(3) The Owner retains ultimate responsibility for the safety of the dam(s) and other project works covered by the Owner's Dam Safety Program.

§ 12.63 Contents of Owner's Dam Safety Program.

The Owner's Dam Safety Program shall contain, at a minimum, the following sections:

(a) Dam safety policy, objectives, and expectations;

(b) Responsibilities for dam safety;

(c) Dam safety training program;

(d) Communication, coordination, reporting, and reports;

(e) Record keeping and databases; and

(f) Continuous improvement.

§ 12.64 Annual review and update of Owner's Dam Safety Program.

The Owner's Dam Safety Program, and the implementation thereof, shall be reviewed at least once annually by the licensee's dam safety staff and discussed with senior management of the Owner's organization. The licensee shall submit the results of the annual review, including findings, analysis, corrective measures, and/or revisions to the Owner's Dam Safety Program, to the Regional Engineer.

§ 12.65 Independent external audit and peer review.

(a) *Applicability.* For licensees of one or more dams or other project works classified as having a high hazard potential, as defined in § 12.3(b)(13)(i), an independent external audit or peer review of the Owner's Dam Safety Program, and the implementation thereof, shall be performed at an interval not to exceed five years.

(b) *Qualifications.* A statement of qualifications for the proposed auditor(s) or peer review team that demonstrates independence from the licensee and its affiliates shall be submitted to the Regional Engineer for review, and written acceptance thereof must be obtained from the Regional Engineer prior to performing the audit or peer review.

(c) *Reporting.* (1) The auditor(s) or peer review team shall document their findings in a report.

(2) The report on the audit or peer review shall be reviewed by the Owner, Chief Dam Safety Engineer or Chief Dam Safety Coordinator, and management having responsibility in the area(s) audited or reviewed.

(3) The report on the audit or peer review shall be submitted to the Regional Engineer.

[FR Doc. 2021–27736 Filed 1–10–22; 8:45 am]

BILLING CODE 6717–01–P

FEDERAL REGISTER

Vol. 87 Tuesday,

No. 7 January 11, 2022

Part III

Department of Veterans Affairs

38 CFR Part 4

Schedule for Rating Disabilities: The Digestive System; Proposed Rule

DEPARTMENT OF VETERANS AFFAIRS

38 CFR Part 4

RIN 2900–AQ90

Schedule for Rating Disabilities: The Digestive System

AGENCY: Department of Veterans Affairs.

ACTION: Proposed rule.

SUMMARY: The Department of Veterans Affairs (VA) proposes to amend the Schedule for Rating Disabilities (VASRD or rating schedule) that addresses the Digestive System. These changes add medical conditions not currently in the rating schedule, revise the rating criteria to reflect medical advances that have occurred since the last revision, clarify existing rating criteria, and update medical terminology. The proposed rule also reflects recommendations from the 2007 report of the National Academy of Sciences, Institute of Medicine, ''A 21st Century System for Evaluating Veterans for Disability Benefits.'' In fashioning this proposed rule, VA considered the most up-to-date medical knowledge and clinical practice of gastroenterology and hepatology specialties.

DATES: VA must receive comments on or before March 14, 2022.

ADDRESSES: Comments may be submitted through *www.regulations.gov* or mailed to, Compensation Service, 21C, 1800 G Street NW, Suite 644A, Washington, DC 20006. Comments should indicate that they are submitted in response to RIN 2900–AQ90—Schedule for Rating Disabilities: The Digestive System. Comments received will be available at *regulations.gov* for public viewing, inspection or copies.

FOR FURTHER INFORMATION CONTACT: Ioulia Vvedenskaya, M.D., M.B.A., Medical Officer, Regulations Staff, (210A), Compensation Service, Veterans Benefits Administration, Department of Veterans Affairs, 810 Vermont Avenue NW, Washington, DC 20420, *211PolicyStaff.Vbavaco@va.gov,* (202) 461–9700. (This is not a toll-free telephone number.)

SUPPLEMENTARY INFORMATION: Since the last update to the rating schedule section on digestive disorders, important advances in the science and medical care have occurred in the fields of nutrition, gastroenterology, and hepatology. Aware of the impact of these changes, the Veterans Benefits Administration (VBA) collaborated with the Veterans Health Administration (VHA) to update the VASRD. The VHA Office of Specialty Care provided VBA with access to leading authorities in their respective fields to help in this update.

VA proposes to revise 38 CFR 4.110–4.114 pertaining to the digestive system based on the most up-to-date understanding of gastrointestinal disorders and associated functional impairment. The Rome Foundation, a non-profit organization assisting in the diagnosis and treatment of functional gastrointestinal disorders, has introduced a system and classification of the various forms of gastrointestinal dysfunction, known as ''Rome IV.'' See Brian Lacy, ''Bowel Disorders,'' Gastroenterology, 150: 1393–1407 (2016).

In the context of the VASRD, VA has incorporated the concepts and diagnostic criteria outlined by Rome IV in several DCs covering functional digestive disorders, including the revised DC 7319 (Irritable Bowel Syndrome) and new DC 7356 (Gastrointestinal Dysmotility), as discussed below. VA proposes to use these criteria to rate certain other functional gastrointestinal conditions. VA discusses the specific amendments proposed in detail below.

Proposed Deletion of 38 CFR 4.110

Section 4.110 advises rating personnel to consider ulcer location (*e.g.,* gastric, duodenal, marginal) when providing graduated descriptions and evaluations of peptic ulcers. VA proposes to eliminate this instruction as obsolete, along with current DCs 7304, 7305, and 7306, all of which also classify ulcers by location. Modern medicine understands that most peptic ulcers are not due to location but either to infection (*Helicobacter pylori*), or the use of medications, such as aspirin or other non-steroidal anti-inflammatory drugs (NSAIDs). See E. Lew, ''Chapter 15: Peptic Ulcer Disease,'' in ''Current Diagnosis & Treatment: Gastroenterology, Hepatology, & Endoscopy'' (N.J. Greenberger, et al. eds., 2nd ed. 2012). *https://accessmedicine.mhmedical.com/content.aspx?sectionid=105183277&bookid=1621&Resultclick=2.* Thus, VA proposes to delete § 4.110.

Proposed Deletion of 38 CFR 4.111

The current § 4.111 discusses a subset of post-gastrectomy syndromes known as dumping syndrome. However, this section does not accurately reflect this specific clinical condition, nor does it offer specific guidance on rating it. Post-gastrectomy syndromes result from altered form and function of the stomach, which disrupts the stomach's reservoir capacity, mechanical digestion, and gastric emptying. Post-gastrectomy syndromes result in persistent gastrointestinal symptoms such as epigastric pain, nausea, vomiting, early satiety, bloating, diarrhea, or weight loss. Davis J.L., Ripley R.T., Postgastrectomy Syndromes and Nutritional Considerations Following Gastric Surgery, Surg Clin North Am. 2017 Apr;97(2):277–293. (last visited Oct 6, 2021) *https://www.clinicalkey.com/#!/content/playContent/1-s2.0-S0039610916521951?returnurl=https:%2F%2Flinkinghub.elsevier.com%2Fretrieve%2Fpii%2FS0039610916521951%3Fshowall%3Dtrue&referrer=https:%2F%2Fwww.ncbi.nlm.nih.gov%2Fpubmed%2F28325187.*

As discussed in more detail below, VA proposes to rate dumping syndrome under new DC 7303, titled ''Chronic complications of upper gastrointestinal surgery,'' which includes operations, including bariatric surgery, performed on the esophagus, stomach, pancreas, and small intestine. Therefore, the material in § 4.111 is unnecessary and, accordingly, VA proposes to remove it.

Proposed Revisions to 38 CFR 4.112

When first published in 1964, § 4.112 discussed issues related to significant weight loss in general terms, referred to as ''appreciable weight loss.'' As part of a 2001 VASRD update, VA introduced and defined the terms ''substantial weight loss'' and ''baseline weight,'' as well as ''minor weight loss'' and ''inability to gain weight.'' 66 FR 29486 (May 31, 2001). VA incorporated these definitions in the VASRD to promote greater uniformity in decision making. Nevertheless, the weight loss requirements among conditions continue to vary. For instance, duodenal ulcer (DC 7305) currently requires weight loss productive of impairment of health, while ulcerative colitis (DC 7323) requires malnutrition.

In accordance with advancements in medicine and the current state of food and nutrition science, VA proposes to update the terms appearing in § 4.112. *See* Jane V. White et al., ''Consensus Statement of the Academy of Nutrition and Dietetics/American Society of Parenteral and Enteral Nutrition Regarding Adult Malnutrition (Undernutrition),'' 112 J. of Academy of Nutritional Dietetics 730–38 (2012). These changes would include modifications to the current definitions of ''substantial weight loss,'' ''minor weight loss,'' ''inability to gain weight,'' and ''baseline weight,'' and would provide alternative methods for obtaining a veteran's baseline weight when this information was not available in the records. All of these proposed changes are discussed in greater detail below.

Currently, 38 CFR 4.112 defines ''baseline weight'' as the average weight for the two-year period preceding the onset of the disease. Weight loss associated with digestive disease prior to military discharge is generally readily ascertainable from an individual's service medical records. However, weight loss associated with digestive disease after military discharge is often less clear, as weight in the military is not always available to physicians afterwards or the onset date of the disease is unknown. As such, VA proposes to redefine ''baseline weight'' (also known as ''usual body weight'') as either documented weight upon discharge from the armed service, if relevant, or the documented average weight for the two-year period preceding the onset of illness. If none of this information is available or is no longer relevant or applicable, VA proposes to estimate the ''baseline weight'' using the Hamwi formula for ideal body weight (IBW) or the Body Mass Index (BMI) table. VA acknowledges that the IBW might provide different results than the BMI tables, depending on the person's body frame and size. Bhumika Shah et al., ''Comparison of Ideal Body Weight Equations and Published Height-Weight Tables With Body Mass Index Tables for Healthy Adults in the United States,'' 21(3) Nutr. Clin. Pract. 312–19 (2006). VA therefore proposes using either method to provide the veteran with the most favorable or advantageous baseline weight under the situations above.

In addition to updating the definition of ''baseline weight,'' VA proposes to clarify the existing requirements regarding degrees of weight loss by including the term ''involuntary'' in reference to the ''weight loss,'' as well as indicating that the weight loss must alter other aspects of health. Moreover, using weight loss to evaluate digestive disorders assumes that it results in some degree of functional impairment. VA proposes to clarify this fact, as it is not clear from the current requirements.

VA also proposes to add the term ''undernutrition'' to § 4.112 to complete a comprehensive definition of weight loss severity. Nutritionists prefer the term ''undernutrition'' over ''malnutrition'' as the latter is more imprecise, denoting either over- or under-nutrition. VA intends to define ''undernutrition'' as a deficiency resulting from involuntary insufficient intake of one or more essential nutrients, or the inability of the body to absorb, utilize, or retain such nutrients. This deficiency results in the failure of the body to maintain normal organ functions and healthy tissues. Jane V. White et al., ''Consensus Statement of the Academy of Nutrition and Dietetics/American Society of Parenteral and Enteral Nutrition Regarding Adult Malnutrition (Undernutrition),'' 112 J. of Academy of Nutritional Dietetics 730–38 (2012). Signs and symptoms of undernutrition may include edema, loss of subcutaneous tissue, peripheral neuropathy, muscle wasting, weakness, abdominal distention, ascites, and BMI below normal range. Id.

Studies indicate that poor nutritional status, to include severe undernutrition, can lead to severe impairment of function. See F. Romagnoni et al., ''Malnutrition disability evaluation,'' 199 Aging (Milano) 194–99 (June 2011). Severe protein undernutrition can impair multiple organ systems. Id. Meanwhile, gastrointestinal cancer can lead to severe malabsorption, gastrointestinal obstruction, bleeding, chronic diarrhea, and intractable vomiting. Id. Maureen B. Huhmann and David A. August, ''Nutrition in Gastrointestinal Cancer,'' in ''Nutrition and Gastrointestinal Disease,'' 158–68 (Mark DeLegge ed. 2008), *https://link.springer.com/content/pdf/10.1007%2F978-1-59745-320-2.pdf.* Physicians confirm undernutrition by measuring weight, BMI, and laboratory results, including serum albumin, transferrin, total lymphocyte count, and delayed hypersensitivity index. Id. General treatment consists of correcting fluid and electrolyte imbalances, as well as nutritional replenishment. Id.

As certain digestive conditions can lead to severe undernutrition and disability requiring nutritional support, VA proposes rating criteria that provide for higher levels of disability based, among other factors, on the type of nutritional support needed. As discussed in more detail below, VA intends to provide higher ratings for individuals whose digestive conditions may require total parenteral nutrition (TPN) or assisted enteral nutrition. VA proposes to define these terms to assist rating personnel in their application. In brief, TPN involves a special liquid nutritional mixture given into the blood through an intravenous catheter. See ''What Is Parenteral Nutrition?'' The American Society for Parenteral and Enteral Nutrition (A.S.P.E.N.) (2012), *http://www.nutritioncare.org/About_Clinical_Nutrition/What_Is_Parenteral_Nutrition/* (last accessed Aug. 29, 2019). Assisted enteral nutrition, on the other hand, involves a special liquid food mixture given through a tube, catheter, or a surgically made hole into the stomach or small bowel. Id. at *http://www.nutritioncare.org/About_Clinical_Nutrition/What_Is_Enteral_Nutrition/* (last accessed Aug. 29, 2019).

Finally, to more accurately describe § 4.112, VA proposes to retitle it as ''Weight loss and nutrition.'' VA intends to reorganize this section into four paragraphs. Paragraph (a) would discuss and define ''substantial weight loss'' and ''minor weight loss;'' paragraph (b) would define ''baseline weight;'' paragraph (c) would define ''undernutrition;'' and paragraph (d) would explain TPN and assisted enteral nutrition.

Proposed Revisions to 38 CFR 4.114

Multiple Ratings Under 38 CFR 4.114

Currently, § 4.114 states that ''[r]atings under diagnostic codes 7301 to 7329, inclusive, 7331, 7342, and 7345 to 7348 inclusive will not be combined with each other. A single evaluation will be assigned under the diagnostic code which reflects the predominant disability picture, with elevation to the next higher evaluation where the severity of the overall disability warrants such elevation.''

As discussed below, VA proposes to add a number of new codes to the digestive system, including gastroesophageal reflux disease (DC 7206), Barrett's esophagus (DC 7207), chronic complications of upper gastrointestinal surgery (DC 7303), liver abscess (DC 7350), pancreas transplant (DC 7352), celiac disease (DC 7355), gastrointestinal dysmotility syndrome (DC 7356), and post pancreatectomy syndrome (DC 7357). VA personnel currently rate these conditions analogous to DCs that VA excludes from combining. VA may combine the new DCs 7206 and 7207, like other esophageal conditions, with other digestive conditions. However, VA proposes to preclude rating personnel

from combining the remaining new codes.

Diagnostic Codes 7200 Through 7202

DC 7200 is currently titled, ''Mouth, injuries of.'' VA proposes to rename it to clarify that it applies to soft tissue injuries that do not include the tongue or lips. Current criteria remain unchanged.

DC 7201 pertains to injuries of the lips; current criteria direct rating personnel to evaluate as disfigurement of the face. VA proposes to specify that it may be rated as either disfigurement of the face (under DC 7800) or as a painful scar (under DC 7804). This is intented to provide greater specificity for raters, and permit a potentially more advantageous rating to claimants based on the facts found by the rater.

DC 7202 is currently titled ''Tongue, loss of whole or part.'' This disability usually occurs in association with treatment for oropharyngeal cancers. The current criteria are based on the amount of tongue removed and degree of speech impairment. However, the criteria pose limitations that prevent the accurate assessment of the disability in this part of the digestive system. First, only the amount of residual tongue and speech impairment are considered. The most salient digestive function, swallowing, is completely excluded. Additionally, the criteria do not account for advances in both medical treatment and rehabilitation that can restore some (if not all) of any swallowing or speech function. See D. Lin, M.D., et al. ''Long-term Functional Outcomes of Total Glossectomy With or Without Total Laryngectomy.'' JAMA Otolaryngol Head Neck Surg, vol 14(9): Pgs 797–803. 2015, *https://jamanetwork.com/journals/jamaotolaryngology/fullarticle/2429579* (last visited Oct. 06, 2021).

The proposed revisions are intended to use criteria specifically focused upon disabilities arising from this part of the digestive system. The criteria would be revised to address swallowing from an anatomic perspective, so the criteria elements must reflect this reality. The 30-percent evaluation level would involve intact oral nutritional intake with permanently impaired swallowing function without prescribed dietary modification (for example, impaired swallowing can present as increased swallowing time or frequent aspiration). The 60-percent evaluation level involves intact oral nutritional intake with permanently impaired swallowing function that requires prescribed dietary modification. The 100-percent evaluation level involves absent oral nutritional intake. VA proposes two notes to accompany this diagnostic code. The first note would direct rating personnel to consider the possibility of awarding special monthly compensation under 38 CFR 3.350. The second note would indicate only a medical provider can prescribe dietary modifications for the purposes of this diagnostic code.

Esophageal Conditions

The proposed changes to esophageal conditions described under proposed DCs 7203 through 7207 reflect the advances in treatment and improved understanding of esophageal disease. The proposed DCs contain more detailed rating criteria involving structural and motility disorders of the esophagus.

Several validated studies incorporate swallowing dysfunction (due to stricture) as one of the major manifestations of severity in esophageal disorders. M. Dakkak and J.R. Bennett, ''A New Dysphagia Score With Objective Validation,'' 14(2) J. of Clinical Gastroenterology 99–100 (1992). Thus, the proposed classification and ratings account for this dysfunction, while also taking into account changes in weight, the requirement for nutritional support, complications, and other interventional needs. The proposed higher rating levels are not exclusively based on esophageal stricture-dilatation, but offer alternative descriptors for a more comprehensive evaluation than the current VASRD.

Diagnostic Code 7203

VA proposes to revise the rating criteria for esophageal disorders that manifest as stricture, currently evaluated under DC 7203. Although these conditions have a wide spectrum of causation, the manifestations are similar. As noted above, several validated studies incorporate swallowing dysfunction (due to stricture) as one of the major manifestations of severity in esophageal disorders. Dakkak, supra at 99. Thus, the proposed classification and rating reflects this feature. VA proposes to add Note (3) that provides a non-exhaustive list of the numerous conditions to which DC 7203 applies. These conditions include but are not limited to esophagitis, mechanical or chemical; Mallory Weiss syndrome (bleeding due to tears at the junction of esophagus and stomach) due to caustic ingestion of alkali or acid; drug-induced or infectious esophagitis due to Candida, virus, or other organism; idiopathic eosinophilic or lymphocytic esophagitis; esophagitis, radiation-therapy induced; esophagitis due to peptic stricture; and any esophageal condition that requires treatment with sclerotherapy. See Norton J. Greenberger et al., ''Section 2: Esophageal Diseases'' in ''Current Diagnosis & Treatment: Gastroenterology, Hepatology, & Endoscopy'' (N.J. Greenberger, et al. eds., 2d ed. 2012).

The current criteria focus on the most common symptom, dysphagia (difficulty with swallowing). In its most disabling form, dysphagia can lead to nutritional deficiencies as well as malnutrition in general (either of which can result in loss of earnings capacity). One of the shortcomings with the current criteria is with the subjective nature of terminology such as ''moderate'' and ''severe.'' No concrete, objective definitions exist for these terms as they pertain to dysphagia.

VA proposes to revise the evaluation criteria using the manner and intensity of treatment intervention as the underlying framework. Additionally, VA would take into consideration that the vast majority of esophageal strictures result from peptic disease. See D. J. Patterson, et al. ''Natural History of Benign Esophageal Stricture Treated By Dilatation,'' Gastroenterology, vol 85, pg 347. 1983, *https://www.gastrojournal.org/article/0016-5085(83)90322-0/pdf* (last visited Oct. 06, 2021). While some strictures are managed over a relatively short period of time (*i.e.,* within 24 months), other cases require a long, protracted intervention period. When this occurs, VA would categorize these cases as either recurrent (defined as the inability to maintain target esophageal diameter beyond 4 weeks after the target diameter has been achieved) and refractory (defined as the inability to achieve target esophageal diameter despite receiving no fewer than 5 dilation sessions performed at 2-week intervals). See M. Kochman, et al. ''The refractory and recurrent esophageal stricture: A definition (letter to the editor),'' Gastrointestinal Endoscopy, vol 62(3) pgs 474–475, 2005, *https://www.giejournal.org/article/S0016-5107(05)01917-6/pdf* (last visited Oct. 06, 2021). Once a case progresses to refractory benign esophageal stricture, only 1 in 3 cases ever achieve clinical resolution (defined as maintenance of dysphagia-free status for at least 6 months without the need for further intervention at the end of follow-up). See A. Repici, et al. ''Natural history and management of refractory benign esophageal strictures,'' Gastrointestinal Endoscopy, vol 84(2), pgs 222–228 (223). 2016. When longer and more intensive intervention occurs, more provider encounters are required, leading to a greater loss in earning capacity.

VA proposes a 0-percent evaluation level for a documented history of esophageal stricture(s) without daily symptoms or the requirement for daily medications. VA proposes a 10-percent evaluation for a documented history of esophageal stricture(s) that requires daily medications to control dysphagia that is otherwise asymptomatic. VA proposes a 30-percent evaluation for a documented history of recurrent or refractory esophageal stricture(s) causing dysphagia which requires dilatation no more than 2 times per year. VA proposes a 50-percent evaluation level for a documented history of recurrent or refractory esophageal stricture(s) causing dysphagia which requires at least one of the following: (1) Dilation 3 or more times per year, (2) dilation using steroids at least one time per year, or (3) esophageal stent placement. VA proposes an 80-percent evaluation for a documented history of recurrent or refractory esophageal stricture(s) causing dysphagia where at least one of the following symptoms is present: (1) Aspiration, (2) undernutrition, and/or (3) substantial weight loss as defined by § 4.112(a) and where such dysphagia was treated with either surgical correction or percutaneous esophago-gastrointestinal tube (PEG tube).

VA also proposes to list 5 notes with DC 7203. The first note would require medical findings to be documented by barium swallow, computerized tomography, or esophagogastroduodenoscopy. The second note would require non-gastrointestinal complications of procedures to be rated under the appropriate system. The third note would provide a non-exhaustive list of esophageal conditions to be evaluated under this DC. Note 4 and Note 5 would define recurrent and refractory strictures, respectively.

Diagnostic Code 7204

VA proposes to retitle this DC from ''esophagus, spasm of (cardiospasm)'' to ''esophageal motility disorder.'' The title change would capture several motor disorders of the esophagus—in addition to esophageal spasm—to which VA would apply DC 7204. These disorders include but are not limited to achalasia (cardiospasm), corkscrew and nutcracker esophagus, esophageal rings including Schatzki rings, mucosal webs or folds, and other conditions influencing motility, such as myasthenia gravis, scleroderma, and other neurological conditions.

VA would not substantively change the existing instruction to rate conditions falling under this DC as esophageal stricture (DC 7203). However, VA proposes to delete, as unnecessary, the prior instruction to evaluate an esophageal spasm not amenable to dilation as a stricture, because the proposed rating criteria for esophageal stricture under DC 7203 now consider the frequency of dilatation.

Diagnostic Code 7205

For clarity, VA proposes to add a note with a non-exhaustive list of conditions to which DC 7205, acquired diverticulum of the esophagus, can apply. These conditions include pharyngo-esophageal (Zenker's) diverticulum, as well as mid-esophageal and epiphrenic diverticula. The existing instruction to rate conditions under this DC as esophageal stricture (DC 7203) would remain without substantive change.

New Diagnostic Code 7206

VA proposes to add a new DC for rating gastroesophageal reflux disease (GERD). Historically, VA has rated this condition analogously to hiatal hernia (DC 7346). As discussed below, VA proposes to evaluate hiatal hernia using the revised criteria found in DC 7203 (Esophagus, stricture of) because the medical community now recognizes the close relationship between the majority of symptoms associated with these conditions. See Dakkak, supra. Similarly, VA proposes to evaluate GERD using rating criteria in DC 7203 because these criteria consider symptoms of esophageal obstruction and irritation, which are consistent with the symptoms of GERD. D. Armstrong et al., ''Canadian consensus conference on the management of gastroesophageal reflux disease in adults: Update 2004,'' 19(1) Canadian J. of Gastroenterology, 15–35 (Jan. 2005).

New Diagnostic Code 7207

VA proposes to add Barrett's esophagus to § 4.114 as a relevant medical condition that the VASRD does not presently address. Barrett's esophagus is characterized by the replacement of the normal squamous epithelium of the distal esophagus by dysplastic or aberrant cells (metaplasia), an anomalous cell overgrowth that may eventually become cancerous. ''Barrett's Esophagus'' in National Digestive Diseases Information Clearinghouse, National Institute of Diabetes and Digestive and Kidney Diseases, NIH Publication No. 13–4546 (Feb. 2013), *https://www.niddk.nih.gov/health-information/digestive-diseases/barretts-esophagus* (last visited Oct. 06, 2021). The vast majority of patients with Barrett's esophagus suffer no long-term effects other than the inconvenience of periodic endoscopy to monitor the appearance of adenocarcinoma. Kunal Jajoo, MD and John R. Saltzman, MD, ''Chapter 12: Barret Esophagus,'' in ''Current Diagnosis & Treatment: Gastroenterology, Hepatology, & Endoscopy'' (N.J. Greenberger, et al. eds., 2d ed. 2012), available at *http://accessmedicine.mhmedical.com/content.aspx?bookid=390&Sectionid=39819242* (last visited Oct. 06, 2021). Various medical texts describe periodic surveillance and acid suppression as adequate to manage the disease. Id. This condition is usually a long-term complication of GERD. ''Barrett's Esophagus,'' supra.

If a veteran with Barrett's esophagus also has stricture, VA proposes to evaluate the condition under DC 7203 (Esophagus, stricture of). This is consistent with the prohibition against pyramiding under 38 CFR 4.14. If, however, esophageal stricture is not present, VA proposes to evaluate Barrett's esophagus based on its progression toward cancer. Specifically, VA proposes a 30-percent evaluation for more advanced presentations (known as high-grade dysplasia), documented by pathologic diagnosis. VA proposes a 10-percent evaluation for less advanced presentations (known as low-grade dysplasia). High-degree dysplasia represents a higher risk of disease and requires closer surveillance, such as more frequent endoscopy, biopsy, etc., and in some cases preemptive esophagectomy for adenocarcinoma. See M.S. Dar et al., ''Can extent of high grade dysplasia in Barrett's esophagus predict the presence of adenocarcinoma at esophagectomy?'' 52 Gut 486–89 (2003). Low-degree dysplasia requires at least yearly endoscopy with biopsy. Id. The symptomatology of patients with Barrett's esophagus is indistinguishable from patients with GERD; thus, the rating of 30 percent is more consistent with higher degree of obstruction, while those at 10 percent have mild esophageal discomfort manageable with medications. See Jajoo, supra.

In addition to the above rating criteria, VA proposes to add a note to evaluate any developing malignancies under DC 7343 (Malignant neoplasms of the digestive system, exclusive of skin growths). VA proposes a second note to evaluate any residuals from successful treatment as DC 7203 (Esophagus, stricture of).

Other Digestive Disorders

Diagnostic Code 7301

VA proposes new rating criteria that consider both alimentary support (such

as parenteral nutrition or dietary modification) and recurrent obstruction. Under the present rating criteria, VA assigns ratings of 50, 30, 10, or 0 percent under DC 7301 based on whether peritoneal adhesions are ''severe,'' ''moderately severe,'' ''moderate,'' or ''mild.'' These terms are generic and undefined and may lead to inconsistent evaluations. Further, the rating criteria do not fully address the complexities of this condition, which may require intravenous nutrition and may not be repairable.

The current DC 7301 provides for a maximum 50-percent rating. However, as some adhesions do not respond to treatment or require nutritional support, VA intends to expand DC 7301 to include an 80-percent evaluation. Under the proposed criteria, VA would assign an 80-percent evaluation for persistent (continuous) partial bowel obstruction that is either inoperable and otherwise refractory to treatment or requires TPN for obstructive symptoms.

The 0-percent evaluation is currently described as ''mild'' without additional criteria, explanation, or definition. VA proposes to re-define the 0-percent evaluation by deleting ''mild'' and clarifying the criteria as ''a history of peritoneal adhesions, currently asymptomatic''. VA proposes to amend the 10-percent evaluation, and assign it for symptomatic adhesions, persisting or recurring after surgery, trauma, inflammatory disease process such as chronic cholecystitis or Crohn's disease, or infection, which includes at least one of the symptoms identified in the current VASRD (*e.g.,* abdominal pain, nausea, vomiting, colic, constipation, or diarrhea). VA proposes to amend the 30-percent evaluation, and assign it for documented symptomatic adhesions that meet the criteria for a 10-percent evaluation, but also require medically-directed dietary modification other than TPN. The current rating criteria provide a 50-percent rating for symptomatology warranting inpatient care (*e.g.,* severe peritonitis, ruptured appendix, perforated ulcer, or an operation with drainage). VA proposes to amend the 50-percent evaluation and assign it for documented symptomatic adhesions requiring hospitalization at least once per year, which also require medically-directed dietary modification, other than TPN, and at least one of the following: Diarrhea, constipation, colic, abdominal pain, nausea, or vomiting.

Currently, diagnostic code 7301 includes a note stating that ratings for adhesions only apply with a history of operative, traumatic, or infectious process and in the presence of at least two of the listed symptoms. This note indicates that VA would evaluate peritoneal adhesions caused by surgery, trauma, or infection. However, diagnostic codes 7310 (Stomach, injury of, residuals) and 7317 (Gallbladder, injury of) provide instructions to rate analogously to diagnostic code 7301 in certain cases. VA proposes to delete the current note to clarify that no adhesions are necessary when evaluating stomach or gallbladder injuries under DC 7301. VA would include in the title of diagnostic code 7301 the language indicating that peritoneal adhesions must be due to surgery, trauma, disease, or infection.

New Diagnostic Code 7303

As noted in the discussion regarding current § 4.111, VA proposes to add a DC entitled ''Chronic complications of upper gastrointestinal surgery,'' which includes the need for parenteral or enteral nutrition and the presence of chronic residual pain, motility issues, and dumping syndrome. Existing codes for these conditions (*e.g.,* DCs 7308–7310) would refer rating personnel to the new code, DC 7303, when appropriate. This proposed DC would contain evaluation criteria based on the criteria contained in existing DCs 7308–7310. However, VA is retaining the individual DCs so VA may continue to track specific claims and outcomes.

VA notes that existing DCs relevant to these conditions provide ratings at 20, 40, and 60 percent. As with other DCs, VA assigns these ratings when the disability level is mild, moderate, or severe, respectively. To better accommodate the various complications that arise with upper gastrointestinal surgery, VA proposes to change and expand the disability levels to 0, 10, 30, 50, and 80 percent. This change would not automatically impact any individuals with current disability ratings under existing DCs. If a Veteran's disability rating would be reduced under the amended version of DC 7303, no change in compensation would occur unless the Veteran applied for a change or reevaluation is otherwise warranted and the Veteran's disability is shown to have improved. *See* 38 U.S.C. 1155. If the Veteran's disability rating would increase under the amended version of DC 7303, the Veteran could reapply for that increase.

VA proposes to assign a 0-percent rating for asymptomatic, post-operative status to ensure that rating personnel understand when a noncompensable evaluation is appropriate. VA proposes a 10-percent rating when ongoing medical treatment manages either nausea or vomiting. This new category would allow VA to compensate those individuals whose effective treatment may preclude outward symptoms, but who nevertheless experience mild impairment due to the need for the treatment itself.

Current ratings provide a 20-percent rating when the level of disability is mild. With the proposed addition of the 10-percent disability level, VA proposes to eliminate the 20-percent disability level and instead evaluate individuals with 2 or more of the following symptoms as 30-percent disabled: (1) Vomiting two or more times per week or vomiting not controlled by medical treatment; (2) discomfort or pain within an hour of eating and requiring oral ongoing dietary modification; or (3) three to five watery bowel movements per day every day.

VA proposes to assign the next level of disability, 50-percent, when any of the following continued symptoms exist: (1) Daily vomiting not controlled by oral dietary modification or medication; (2) six or more watery bowel movements per day every day or explosive bowel movements that are difficult to predict or control; (3) post-prandial (meal-induced) light-headedness (syncope) with sweating, the need for medications (such as octreotide) specifically to treat complications of upper gastrointestinal surgery, including dumping syndrome or delayed gastric emptying (requiring promotility agents) following esophageal or stomach surgery.

VA proposes an 80-percent evaluation for complete dependence on TPN (*i.e.,* required continuous total parenteral nutrition) or tube feeding lasting for a period longer than 30 consecutive days in the past 6 months. Although some dependence on nutritional support such as TPN or tube feeding is expected immediately following surgery, a duration lasting longer than 30 consecutive days post-operatively is excessive and reflects a more severe ongoing disability picture. This evaluation is consistent with other disability ratings which require similar levels of nutritional support (*e.g.,* TPN).

Because of its differing presentation, VA proposes to include Note (1), which instructs rating personnel to evaluate complications following intestinal resection under DC 7328 (Intestine, small, resection, dysfunction or malabsorption). VA also proposes to include Note (2), directing that rating personnel evaluate vitamin/mineral deficiencies associated with pancreatic surgery under the appropriate vitamin/mineral deficiency code if a higher evaluation would result. Finally, to further assist rating personnel in accurately applying DC 7303, VA

intends to include Note (3), which indicates that this DC includes operations performed on the esophagus, stomach, pancreas, and small intestine, including bariatric surgery.

Diagnostic Codes 7304 Through 7306

At present, VA evaluates ulcers depending on their location under the following DCs: DC 7304 (Gastric); DC 7305 (Duodenal); and DC 7306 (Marginal gastrojejunal). While ulcers may vary in location, they produce the same array of symptoms and do not differ in functional incapacity. Therefore, VA proposes to eliminate DCs 7305 and 7306 and revise DC 7304, retitled ''Peptic ulcer disease,'' to include all evaluations previously done under current DCs 7304, 7305, 7306.

In 1984, Drs. Barry J. Marshall, and J. Robin Warren reported finding a curved bacillus, initially named *Campylobacter pyloridis,* and subsequently classified as *Helicobacter pylori* (H. pylori), in biopsies taken from patients with gastritis and peptic ulcers. B.J. Marshall and J.R. Warren, ''Unidentified curved bacilli in the stomach of patients with gastritis and peptic ulceration,'' Lancet 1(8390), 1311–15 (June 16, 1984). Drs. Marshall and Warren received the Nobel Prize for Medicine and Physiology in 2005 for their discovery that peptic ulcer disease (PUD) was primarily caused by *H. pylori,* a bacterium with acidic affinity.

Numerous studies have since shown that the eradication of this bacterium reduces ulcer recurrence and complications such as bleeding and cancer. See E. Lew, ''Chapter 15. Peptic Ulcer Disease,'' in ''Current Diagnosis & Treatment: Gastroenterology, Hepatology, & Endoscopy,'' (2d ed. 2012), *http://accessmedicine.mhmedical.com/content.aspx?bookid=390&Sectionid=39819246* (last visited Oct. 06, 2021). Studies have also shown that PUD is primarily related to either *H. pylori* infection or, to a lesser degree, the use of NSAIDS. Id. Other peptic ulcers are residuals of surgery (anastomotic or post-operative gastric). See C. Avunduk, ''Chapter 28. Postgastrectomy Disorders,'' in ''Manual of Gastroenterology: Diagnosis and Therapy,'' The management and outcome of PUD has been drastically changed by the introduction of acid-suppressive and proton pump inhibitor (PPI) therapy. Id. Improved hygiene and antibiotic use have also helped drastically reduced the overall incidence of PUD. Id. VA proposes that this code evaluate *H. pylori,* NSAID, anastomotic, and post-operative gastric ulcers, including treatable conditions.

Currently, VA evaluates ulcers as ''mild,'' ''moderate,'' ''moderately severe,'' ''severe,'' and ''pronounced.'' Although these terms refer to common symptoms such as abdominal pain, vomiting, melena (tarry stools), and weight loss, the criteria remain subjective and vague, which may lead to inconsistent evaluations. For example, under current DC 7305, VA assigns a 40-percent evaluation when the duodenal ulcer is ''Moderately severe; less than severe but with impairment of health manifested by anemia and weight loss; or recurrent incapacitating episodes averaging 10 days or more in duration at least 4 or more times a year.'' What constitutes ''less than severe'' symptomatology or an ''incapacitating episode'' is not defined. To better evaluate peptic ulcers, VA proposes to provide more specific rating criteria which clearly identify the major symptoms associated with PUD and evaluate the level of disability based on the presence of these symptoms, their frequency, and any treatment or outcomes.

VA proposes to assign a 0-percent evaluation for a history of PUD documented by endoscopy or X-ray. VA proposes a 20-percent evaluation for episodes of abdominal pain, nausea, or vomiting lasting for 3 days or more, occurring 3 times or less in the past 12 months, and the symptoms are managed by daily prescribed medication.

Current criteria for a 40-percent evaluation under DC 7305 and 7306 focus on ''recurrent incapacitating episodes,'' or ''intercurrent episodes of pain . . . [and] mild and transient episodes of vomiting or melena.'' As noted above, VA intends to reduce or eliminate ambiguity in its rating criteria by replacing vague terms such as ''recurrent,'' ''transient,'' and ''incapacitating episodes'' with clear, objective criteria. Therefore, VA proposes to assign a 40-percent evaluation for episodes of abdominal pain, nausea, or vomiting lasting for 3 days or more, occurring 4 or more times in the past 12 months.

VA intends to assign a 60-percent evaluation for continuous abdominal pain with intermittent vomiting, recurrent hematemesis (vomiting blood) or melena (tarry stools), and manifestations of anemia which require hospitalization at least once in the past 12 months. The requirement for hospitalization is indicative of severe disabling effects of PUD, which is resistant to treatment and more disabling in its outcome than the symptomatology in the 0-, 20-, and 40-percent evaluation levels.

VA proposes to assign a 100-percent evaluation for 3 months after surgical repair of a perforation or hemorrhage (Fitness for Work, K. Palmer, I. Brown, J. Hobson, Oxford U Press 2013, page 438). According to widely accepted occupational health reference and clinical guidelines, the three-month period for recuperation is recommended in cases of surgical repairs for perforated gastric ulcer or hemorrhage. (T. Palmer, I. Brown, and J. Hobson, Fitness for Work, 5th ed. (2013)). After three months, VA would determine the appropriate rating for residuals using a mandatory VA examination, as stated in the note to DC 7304.

Diagnostic Code 7307

While effective treatment of gastritis requires identification of the specific etiology (origin), the specific etiology has little relevance to functional incapacity, as its symptoms are consistent. Akiva J Marcus et al., ''Chronic Gastritis,'' Medscape (Jun 07, 2019), *http://emedicine.medscape.com/article/176156-overview* (last visited Oct. 06, 2021). Therefore, VA proposes to retitle DC 7307 from ''Gastritis, hypertrophic (identified by gastroscope)'' to the more generalized term of ''Gastritis, chronic.'' VA intends to remove the requirement for endoscopy (*e.g.,* gastroscope) as it is burdensome, unnecessary, or replaced by radiology. See K.R. McQuaid, ''Chapter 15. Gastrointestinal Disorders,'' in ''Current Medical Diagnosis & Treatment 2021,'' (M.A. Papadakis et al. eds. 2021), *https://accessmedicine.mhmedical.com/book.aspx?bookID=2957#249360894* (last visited Oct. 06, 2021). VA also proposes to add a note that lists some of the conditions to which this DC applies to help ensure consistent usage.

The medical community recognizes the symptomatology and functional incapacity associated with chronic gastritis is consistent with PUD. Id. Therefore, VA proposes to remove the existing rating criteria and replace it with a directive to evaluate the condition as a form of PUD under DC 7304.

Diagnostic Code 7308

Postgastrectomy syndromes (DC 7308) are complications of surgery on the stomach. Anatomic and physiological changes introduced by gastric surgery result in changes in the motor functions of the stomach, including disturbances in the gastric reservoir function, the mechanical-digestive function, and the transporting function. See Eagon, J.C., et al. Postgastrectomy syndromes. Surg Clin North Am. 1992 Apr;72(2):445–65.

(last visited Oct. 06, 2021) *https://www.sciencedirect.com/science/article/pii/S0039610916456896?via%3Dihub*. Therefore, VA proposes to remove the current rating criteria and direct rating personnel to use the new criteria of DC 7303 (Chronic complications of upper gastrointestinal surgery).

Diagnostic Code 7309

Currently, DC 7309 (Stomach, stenosis of) directs rating personnel to evaluate it as gastric ulcer, DC 7304. Although this condition is most often a complication of upper gastrointestinal surgery, it less commonly may be a complication of PUD. Jin Hyoung Kim, MD, et al., ''Fluoroscopically Guided Balloon Dilation for Benign Anastomotic Stricture in the Upper Gastrointestinal Tract,'' 9 Korean J. Radiology 4 (2008). As such, VA proposes to direct rating personnel to evaluate this condition under either DC 7303 (Chronic complications of upper gastrointestinal surgery) or DC 7304 (Peptic ulcer disease).

Diagnostic Code 7310

Currently, DC 7310 directs rating personnel to evaluate injuries to the stomach using the criteria of DC 7301 (Peritoneum, adhesion of). However, certain gastrointestinal procedures can also result in injury to the stomach, as well as such neighboring viscera as the pancreas and intestines. Therefore, VA proposes to amend the existing direction to state that rating personnel should continue to evaluate pre-operative injuries to the stomach using the criteria of DC 7301 (Peritoneum, adhesions of, due to surgery, trauma, disease, or infection), while they should evaluate post-operative injuries under the new DC 7303 (Chronic complications of upper gastrointestinal surgery). VA proposes to further amend the instruction for pre-operative injuries to clarify that no adhesions are necessary when evaluating stomach injuries under DC 7301.

Diagnostic Code 7312

The current DC 7312 is entitled ''Cirrhosis of the liver, primary biliary cirrhosis, or cirrhotic phase of sclerosing cholangitis.'' As the two latter conditions are forms of cirrhosis, VA proposes to simplify the title of DC 7312 to ''Cirrhosis of the liver.'' Currently, VA evaluates conditions within the scope of DC 7312 using physical status, functional limitation, laboratory findings, and imaging studies.

Since last modifying this rating criteria, the medical community has increasingly accepted the Model for End-Stage Liver Disease (MELD), a mathematical model developed by the Mayo Clinic to predict survival and outcome in liver disease. P.S. Kamath et al., ''Model for End-Stage Liver Disease (MELD),'' 45 Hepatology 797 (2007); David Wolf, *https://aasldpubs.onlinelibrary.wiley.com/doi/full/10.1002/hep.21563* (last visited Oct. 06, 2021). The MELD score is used throughout the United States to prioritize and stage patients waiting for liver transplants. It also serves as the Social Security Administration's basis for the SSA Chronic Liver Disease (SSA CLD) score used for calculating the severity of chronic liver disease. Disability Evaluation Under Social Security: Blue Book, Chapter 5.00 Digestive System—Adult, section 505: Chronic Liver Disease, Paragraph G, (Sept. 2008). The MELD score is well suited to rating disabilities because of its high correlation with clinical features, including functional status. The MELD also predicts prognosis (disease severity and mortality) in patients with liver cirrhosis and alcoholic hepatitis. F. Botta et al., ''MELD Scoring System in patients with liver cirrhosis and residual liver function,'' 52 Gut 134–39 (2003), *http://gut.bmj.com/content/52/1/134.full.pdf+html* (last visited Oct. 06, 2021). Also, see Milan Sheth et al., ''Utility of the Mayo End-Stage Liver Disease (MELD) score in assessing prognosis of patients with alcoholic hepatitis,'' 2 BMC Gastroenterology 2 (2002), *http://www.biomedcentral.com/content/pdf/1471-230x-2-2.pdf* (last visited Oct. 06, 2021). Therefore, VA is proposing to include it in the rating criteria for cirrhosis alongside analogous clinical signs and symptoms.

The following three values form the MELD score: (1) International normalized ratio (INR) (prothrombin time); (2) serum bilirubin; and (3) serum creatinine. The mathematical equation below uses these values to produce a score between 6 and 40, with 40 indicating a gravely ill person with high risk of mortality.

$$\text{MELDScore} = 10 * ((0.957 * \ln(\text{Creatinine})) + (0.378 * \ln(\text{Bilirubin})) + (1.12 * \ln(\text{INR}))) + 6.43$$

See Wolf, supra at *https://emedicine.medscape.com/article/185856-overview#showall* (last visited Oct. 06, 2021). The scores from 6 to 15 correlate best with expected survival. Id. VA intends the rating criteria to list ranges of MELD scores that correspond to various levels of liver impairment correlated with clinical findings.

As the MELD score may not always be available, VA also proposes to include alternative means of determining functional impairment using clinical findings pertaining to physical status, functional incapacity, laboratory findings, and imaging studies.

VA intends to assign a 0-percent evaluation for a history of liver disease without current symptoms. Consistent with the current evaluation under DC 7312, VA would assign a 10-percent evaluation for either a MELD score greater than 6 but less than 10, or evidence of weakness, anorexia, abdominal pain, or malaise.

VA currently assigns a 30-percent evaluation for portal hypertension and splenomegaly, with weakness, anorexia, abdominal pain, malaise, and at least minor weight loss. VA proposes to eliminate the reference to ''minor weight loss'' and assign a 30-percent evaluation for either a MELD score of 10 or 11, or; portal hypertension (splenomegaly or ascites) with weakness, anorexia, abdominal pain, or malaise, which would fully reflect the severity of the disability.

The current DC 7312 assigns either a 50- or 70-percent evaluation depending on the number of episodes of ascites, hepatic encephalopathy, or hemorrhage from varices or portal gastropathy (erosive gastritis). VA proposes to eliminate the 50- and 70-percent levels of evaluation and assign a 60-percent evaluation for a MELD score greater than 11 but less than 15, or daily fatigue with at least 1 episode in the last year of variceal hemorrhage, portal gastropathy, or hepatic encephalopathy. This proposal would ensure VA rates individuals for chronic symptomatology, as well as episodic flare-ups.

VA proposes a 100-percent evaluation for either a MELD score of at least 15, or constant daily debilitating symptoms and generalized weakness with at least one of the following: Ascites (fluid in the abdomen), a history of spontaneous bacterial peritonitis, encephalopathy, variceal hemorrhage, coagulopathy, portal gastropathy, hepatopulmonary or hepatorenal syndrome.

In addition to the above rating criteria, VA proposes to add three notes. Note 1 would instruct rating personnel to evaluate hepatocellular carcinoma occurring with cirrhosis under DC 7343 (Malignant neoplasms of the digestive system, exclusive of skin growths) rather than cirrhosis. Note 2 would indicate that biochemical studies, imaging studies, or biopsies must confirm liver dysfunction, including hyponatremia, thrombocytopenia, and/or coagulopathy in order to receive an evaluation under DC 7312. Note 3 would instruct rating personnel to

evaluate the condition based on symptomatology where the evidence does not contain a MELD score.

Diagnostic Code 7314

DC 7314 is currently titled ''Cholecystitis, chronic,'' which is a persistent swelling and irritation of the gallbladder. The gallbladder is a sac adjacent to the liver that stores bile, a substance the liver makes and the intestines use to digest fats. See ''Gallstones,'' National Digestive Diseases Information Clearing House, NIH Publication No. 13–2897 (November 2017), *https://www.niddk.nih.gov/health-information/digestive-diseases/gallstones* (last visited Oct. 06, 2021). The symptoms of chronic cholecystitis are similar to other diseases of the biliary tract (the name for the liver and gallbladder ducts, which are related to the production, storage, and use of bile). See G. Paumgartner and N.J. Greenberger, ''Chapter 53. Gallstone Disease,'' in ''Current Diagnosis & Treatment: Gastroenterology, Hepatology, & Endoscopy,'' (N.J. Greenberger, et al. eds., 2d ed. 2012), *http://accessmedicine.mhmedical.com/content.aspx?bookid=390&Sectionid=39819290* (last visited Oct. 06, 2021). Therefore, VA proposes to expand this DC to cover all chronic diseases of the biliary tract by retitling it ''Chronic biliary tract disease.''

Currently, DC 7314 provides 30-, 10-, and 0-percent evaluations. VA assigns a 30-percent evaluation if the condition is severe, with frequent attacks of gallbladder colic. VA assigns a 10-percent evaluation if the condition is moderate, with gallbladder dyspepsia, confirmed by X-ray, and with infrequent attacks (not over 2 or 3 a year) of gallbladder colic, with or without jaundice. VA assigns a 0-percent evaluation if the condition is mild.

VA proposes to eliminate the subjective terms in the existing criteria as a way of reducing inconsistent evaluations, but continue rating these conditions on the frequency of ''attacks.'' To provide more objectivity to the rating process, VA proposes to specify the number of episodes and associated symptoms required for each level of disability.

VA proposes to assign a 30-percent evaluation for 3 or more clinically documented attacks of right upper quadrant pain with nausea and vomiting in the past 12 months; or when biliary tract strictures require dilatation at least once in the past 12 months. VA would assign a 10-percent evaluation for 1 or 2 clinically documented attacks of right upper quadrant pain with nausea and vomiting in the past 12 months. Under this proposal, VA would assign a 0-percent evaluation when the condition is asymptomatic and there is no history of a clinically documented attack of right upper quadrant pain with nausea and vomiting in the past 12 months.

In addition to the above criteria, VA proposes to note the following non-exhaustive list of conditions to which this DC applies: Cholangitis, biliary strictures, Sphincter of Oddi dysfunction, bile duct injury, and choledochal cyst. This note would also direct evaluating primary sclerosing cholangitis under the renamed DC 7345 (Chronic liver disease without cirrhosis), due to shared symptomatology.

Diagnostic Code 7315

DC 7315, Chronic choleslithiasis, currently directs rating personnel to evaluate this condition under DC 7314 (Cholecystitis, chronic). VA does not propose any changes other than amending the instruction to reflect the retitling of DC 7314.

Diagnostic Code 7316

DC 7316, chronic cholangitis, is one of several related conditions currently evaluated under DC 7314 (Cholecystitis, chronic). VA proposes to track this disability under DC 7314, so it proposes to eliminate DC 7316. This removal would not, in and of itself, alter existing evaluations or grants of service connection. Rather, VA would modify the individual's record to reflect the grant of service connection under DC 7314 instead of DC 7316.

Diagnostic Code 7317

Currently, VA directs rating personnel to rate gallbladder injuries under DC 7301 (Peritoneum, adhesions of). However, that code does not address all likely effects of injuries to the gallbladder. Therefore, VA proposes to evaluate this condition under whichever of the following DCs most effectively demonstrates the level of functional limitation: 7301 (Peritoneal adhesions), or 7314 (Chronic gallbladder and biliary tract disease), or 7318 (Cholecystectomy (gallbladder removal) complications of (such as strictures and biliary leaks)). VA also proposes to correct a typographical error, changing the title from ''Gall bladder, injury of,'' to ''Gallbladder, injury of.''

Further, VA proposes to add a note to DC 7317, clarifying that no adhesions are necessary when evaluating gallbladder injuries under DC 7301.

Diagnostic Code 7318

Currently, DC 7318 is titled, ''Gall bladder, removal of.'' As with DC 7317, VA is correcting the spelling to ''Gallbladder.'' However, the current title does not fully express the scope of complications of gallbladder removal. Also, the medical term for gallbladder removal is cholecystectomy. As rating personnel may encounter either term in medical records, VA proposes to retitle this DC as ''Cholecystectomy (gallbladder removal), complications of (such as strictures and biliary leaks).''

VA currently assigns a 30-percent evaluation for severe symptoms, a 10-percent evaluation for mild symptoms, and 0-percent evaluation if the condition is asymptomatic. Using subjective terms ''severe'' and ''mild'' without indicating specific symptoms may contribute to inconsistent evaluations.

Therefore, VA proposes new criteria that enumerate the complications and symptoms, to include abdominal pain and diarrhea, resulting from the removal of the gallbladder. See Steen W. Jensen, MD, ''Postcholecystectomy Syndrome,'' Medscape Reference (Jul 24, 2020), *http://emedicine.medscape.com/article/192761-overview* (last visited Oct. 06, 2021). Specifically, VA proposes to assign a 0-percent evaluation for a cholecystectomy without symptoms. VA proposes a 10-percent evaluation for intermittent (stopping and starting at intervals) abdominal pain and diarrhea characterized by one to two watery bowel movements per day. VA proposes a 30-percent evaluation for recurrent abdominal pain most often occurring after a meal (post-prandial) or at night time (nocturnal) and chronic diarrhea characterized by three or more watery bowel movements per day.

Diagnostic Code 7319

DC 7319 is currently titled ''Irritable colon syndrome (spastic colitis, mucous colitis, etc.).'' However, the medical community now refers to ''irritable colon syndrome'' as ''irritable bowel syndrome.'' Therefore, VA proposes to retitle this code ''Irritable Bowel Syndrome (IBS)'' to more accurately describe the condition to which it applies.

The current evaluation levels under this DC are 30, 10, and 0-percent. VA assigns a 30-percent evaluation if the condition is severe, ''with diarrhea or alternating diarrhea and constipation, with more or less constant abdominal distress.'' VA assigns a 10-percent evaluation if the condition is moderate, with ''frequent episodes of bowel disturbance with abdominal distress.'' VA assigns a 0-percent evaluation if the condition is mild, with ''disturbances of bowel function with occasional episodes of abdominal distress.''

VA proposes to replace current criteria with more objective criteria derived from the Rome IV criteria for IBS. See Brian Lacy, ''Bowel Disorders,'' Gastroenterology, 150: 1393–1407 (2016).

Specifically, VA proposes to assign a 10-percent evaluation when an individual has abdominal pain related to defecation at least once during the previous 3 months. In addition, this person must have had two or more of the following: Change in stool frequency, change in stool form, altered stool passage (straining and/or urgency), mucorrhea, abdominal bloating, or subjective distension.

VA proposes to assign a 20 percent evaluation when an individual has abdominal pain for at least 3 days per month during the previous 3 months. Additionally, this individual must have had two or more of the following: Change in stool frequency, change in stool form, altered stool passage (straining and/or urgency), mucorrhea, abdominal bloating, or subjective distension.

VA proposes a 30-percent evaluation when an individual has at least one episode per week of abdominal pain associated with defecation during the previous 3 months. Further, the individual must have exhibited two or more of the following: Change in stool frequency, change in stool form, altered stool passage (straining and/or urgency), mucorrhea, abdominal bloating, or subjective distension.

VA also proposes to add one note to DC 7319 to assist rating personnel in applying these criteria. This note would clarify that this DC pertains to functional digestive disorders (38 CFR 3.317), such as dyspepsia, functional bloating and constipation, and diarrhea. Rating personnel may evaluate other symptoms of functional digestive disorders not found under this code using new DC 7356 (gastrointestinal dysmotility syndrome), following the general principles of §§ 4.14 and 4.114.

Proposed Elimination of DC 7321, Amebiasis, DC 7322, Dysentery, Bacillary, and DC 7324, Distomiasis, Intestinal or Hepatic

All three diagnostic codes refer to conditions that are infectious in nature. There are two main types of dysentery: (1) Bacillary dysentery or shigellosis that is caused by shigella bacteria, and (2) amebic dysentery or amebiasis that is caused by an ameba (single-celled parasite) called Entamoeba histolytica. DC 7324 is currently titled ''Distomiasis, intestinal or hepatic'' and refers to the early 20th century medical texts that used this now outdated term when referring to an intestinal parasitosis caused by trematodes or flukes (Fasciola hepatica).

VA published a final rule in the **Federal Register** at 84 FR 28227 on June 18, 2019, to amend 38 CFR 4.88a and 4.88b, the portion of the VASRD dealing with infectious diseases, immune disorders, and nutritional deficiencies. In this final rule, VA introduced two new diagnostic codes, DC 6334 (Shigella infections) and 6320 (Parasitic diseases) otherwise not specified. DC 6334 addresses conditions previously covered under DC 7322 and DC 6320 addresses conditions previously covered under DC 7321 and DC 7324. Therefore, VA proposes to delete DC 7321 (Amebiasis), DC 7322 (Dysentery, bacillary), and DC 7324 (Distomiasis, intestinal or hepatic) from the portion of the rating schedule that addresses the digestive system.

This removal would not, in and of itself, alter existing evaluations or grants of service connection. Rather, VA would modify the individual's record to reflect the grant of service connection under the appropriate diagnostic code.

Diagnostic Code 7323

VA currently evaluates ulcerative colitis (DC 7323) at 100, 60, 30, or 10 percent. VA assigns a 100-percent evaluation if the condition is pronounced, resulting in marked malnutrition, anemia, and general debility, or if there are serious complications, such as liver abscess. A severe condition, consisting of numerous attacks yearly and malnutrition, with health only fair during remissions, warrants a 60-percent evaluation. VA assigns a 30-percent evaluation if the condition is moderately severe, with frequent exacerbations. A moderate condition, with infrequent exacerbations, warrants a 10-percent evaluation.

Ulcerative colitis is one of the primary forms of inflammatory bowel disease. While specific inflammatory bowel diseases merit different treatment, they share many common symptoms and resulting functional impairments. ''Ulcerative Colitis,'' University of Maryland Medical Center, Inflammatory Bowel Disease Center (Apr. 23, 2013), *http://www.umm.edu/programs/ibd/services/colitis* (last visited Oct. 06, 2021). Therefore, VA proposes to remove the existing criteria and replace it with an instruction to rate the condition using the criteria proposed for the newly created DC 7326, Crohn's disease, another form of inflammatory bowel disease.

Diagnostic Code 7325

Currently, VA evaluates chronic enteritis using the criteria under DC 7319 (Irritable colon syndrome). However, this process may not account for the most likely or most disabling of symptoms. Therefore, VA proposes to direct rating personnel to rate these conditions under either the revised DC 7319 (Irritable bowel syndrome) or DC 7326 (Crohn's disease), whichever is most appropriate.

Diagnostic Code 7326

Currently, DC 7326 is titled ''Enterocolitis, chronic.'' VA proposes to retitle it, ''Crohn's disease or undifferentiated form of inflammatory bowel disease'' to account for the array of inflammatory intestinal conditions that have similar symptoms and functional outcomes.

Currently, VA directs rating personnel to evaluate this condition using the criteria provided under DC 7319 (Irritable colon syndrome). However, the medical community has determined that inflammatory bowel conditions are distinct from irritable bowel conditions (see DC 7319) and are characterized by inflammation of unknown etiology that can affect any portion of the gastrointestinal tract from the mouth to the perianal area. See ''IBS and IBD: Two Very Different Disorders,'' Crohn's & Colitis Foundation of America (Oct. 2019), *https://www.crohnscolitisfoundation.org/what-is-ibd/ibs-vs-ibd* (last visited Oct. 06, 2021). See also ''What Is Crohn's Disease?'' Crohn's & Colitis Foundation of America, *http://www.crohnscolitisfoundation.org/what-are-crohns-and-colitis/what-is-crohns-disease/* (last visited Oct. 06, 2021). Transmural inflammation, coupled with the number of potentially affected organs, produces various signs and symptoms and corresponding functional outcomes.

Therefore, VA proposes new rating criteria based on the Truelove and Witts criteria for inflammatory bowel disease, to include Crohn's disease and ulcerative colitis (DC 7323). A. Kornbluth and D. Sachar, ''The Practice Guidelines for Ulcerative Colitis of the American College of Gastroenterology,'' 105 a.m. J. Gastroenterology, 501–23 (2010). These criteria focus on the frequency and severity of the hallmark clinical symptom, bloody diarrhea with rectal urgency. Id. In addition to these criteria, VA proposes to evaluate the severity of the disease based on the number and frequency of exacerbations, as well as the level of treatment used to control the disease.

According to the Truelove and Witts criteria, mild symptomatology involves fewer than four bowel movements per day with infrequent rectal bleeding; severe symptomatology involves six or more bowel movements per day with frequent rectal bleeding. VA therefore proposes to assign a 10-percent evaluation for minimal or mild symptomatic disease that is managed with oral or topical agents (other than immunosuppressants or other biologic agents) and is characterized by recurrent abdominal pain with 3 or less daily episodes of diarrhea and no signs of systemic toxicity.

VA proposes a 30-percent evaluation for mild to moderate disease, with recurrent abdominal pain, with 3 or less episodes of diarrhea per day, minimal signs of toxicity (fever, tachycardia, or anemia), and symptoms managed with topical or oral agents.

VA proposes to assign a 60-percent evaluation for moderate disease with recurrent abdominal pain, 4 to 5 daily episodes of diarrhea, and intermittent signs of toxicity (such as fever, tachycardia, or anemia), and requiring immunosuppressants or other biologic agents on an outpatient basis.

VA proposes a 100-percent evaluation for all cases of severe inflammatory bowel disease that are unresponsive to treatment, require hospitalization at least annually, and result in either an inability to work or are characterized by recurrent abdominal pain associated with at least 2 of the following features: 6 or more episodes per day of diarrhea, 6 or more episodes per day of rectal bleeding, recurrent episodes of rectal incontinence, or recurrent abdominal distention. VA also proposes to include three notes to assist rating personnel in applying DC 7326. The first note would direct that, following colectomy or colostomy with persistent or recurrent residuals, rating personnel should evaluate the condition under DC 7326 or DC 7329 (Intestine, large, resection of), whichever DC provides the highest rating. The second note would state that endoscopy or radiologic studies must confirm the diagnosis of IBD for VA rating purposes to ensure the proper application of this code. William A. Rowe et al., ''Inflammatory bowel disease,'' Medscape Reference (Apr 10, 2020), *http://emedicine.medscape.com/article/179037-overview* (last visited Oct. 06, 2021). Finally, the third note would inform personnel that inflammatory bowel disease may affect any segment of the gastrointestinal tract from the mouth to the anus.

VA acknowledges that, generally, the use of the terms ''minimal,'' ''mild,'' ''moderate,'' and ''severe'' may lead to inconsistent evaluations due to their subjectivity. However, VA proposes to provide more clarity in the assignment of ratings by defining these terms by the characteristics and criteria listed for each level under DC 7326.

Diagnostic Code 7327

Currently, DC 7327 is titled ''Diverticulitis.'' VA proposes to retitle it as ''Diverticulitis and diverticulosis'' to account for other conditions that rating personnel presently evaluate analogously under this code.

In its present form, DC 7327 does not provide specific criteria for diverticulitis but instead directs rating personnel to evaluate it as irritable colon syndrome (DC 7319), peritoneal adhesions (DC 7301), or ulcerative colitis (DC 7323), depending on the predominant disability picture. However, these criteria do not sufficiently capture its functional impairment. Therefore, VA proposes criteria specific to diverticulitis, such as fever, abdominal pain, elevated white cell count, the frequency of disabling episodes, the development of abdominal complications, intestinal bleeding, and hospitalizations. According to the National Institute of Diabetes and Digestive and Kidney Disease, diverticulosis is quite common, especially in the aging population. Survey data suggests while only about 35 percent of U.S. adults age 50 years or younger have diverticulosis, individuals older than age 60 are affected at a higher rate (58 percent). Furthermore, research suggests that less than 5 percent of people with diverticulosis would develop diverticulitis, but most people with diverticulosis will never develop symptoms or problems. See ''Diverticular Disease,'' National Digestive Diseases Information Clearing House, NIH Publication No. 13–1163 (May 2016), *https://www.niddk.nih.gov/health-information/digestive-diseases/diverticulosis-diverticulitis/definition-facts* (last visited Oct. 06, 2021).

Specifically, VA proposes assigning a 0-percent evaluation for asymptomatic diverticulitis or diverticulosis; or a symptomatic diverticulitis or diverticulosis that is managed by diet and medication. VA proposes a 20-percent evaluation for diverticular disease requiring hospitalization one or more times per year for abdominal distress, fever, and leukocytosis (elevated white blood cells) without associated hemorrhage, obstruction, abscess, peritonitis, or perforation. VA proposes a 30-percent evaluation for diverticular disease requiring hospitalization for abdominal distress, fever, and leukocytosis one or more times the past 12 months, with at least 1 of the following complications: Hemorrhage, obstruction, abscess, peritonitis, or perforation. VA also proposes to include one note to clarify that rating personnel should evaluate colectomy or colostomy under either this DC or DC 7329 (Intestine, large, resection of), whichever DC results in the highest evaluation.

Diagnostic Code 7328

VA currently evaluates resection of the small intestine as follows: A 60-percent evaluation if the condition shows ''marked interference with absorption and nutrition, manifested by severe impairment of health objectively supported by examination findings, including material weight loss;'' a 40-percent evaluation if the condition produces ''definite interference with absorption and nutrition, manifested by impairment of health objectively supported by examination findings, including definite weight loss;'' and a 20-percent evaluation if the condition is ''symptomatic, with diarrhea, anemia, and inability to gain weight.''

These criteria contain vague terms, such as ''material,'' ''definite,'' and ''marked.'' Also, the current criteria, based partly on weight loss or the inability to gain weight, are no longer appropriate because the availability of parenteral and supplemental nutrition will ordinarily allow patients to maintain body weight.

Therefore, VA proposes to provide rating criteria that are both more objective and more characteristic of the disabling effects of resection of the small intestine in light of modern medicine. The new criteria would consider the need for oral dietary supplementation or parenteral nutrition and the presence of diarrhea and other symptoms.

Based on the current clinical guidelines and reflective of functional outcomes of small intestine resection described below, VA proposes to assign a 0-percent evaluation for asymptomatic individuals with a history of resection of the small intestine. VA would assign a 20-percent evaluation for an individual who is status post intestinal resection and experiences 4 or more episodes of diarrhea per day. VA proposes a 40-percent evaluation when there is evidence of 4 or more episodes of diarrhea per day resulting in undernutrition and anemia, and the individual requires prescribed oral dietary supplementation and continuous medication. VA proposes a 60-percent evaluation for manifestations of undernutrition and anemia and

requiring prescribed oral dietary supplementation, continuous medication and intermittent total parental nutrition (TPN). VA proposes an 80-percent evaluation for manifestations of undernutrition and anemia that require total parenteral nutrition.

Additionally, VA proposes to include an explanatory note stating that this condition includes short bowel syndrome, mesenteric ischemic thrombosis, and post-bariatric surgery complications with instructions to consider a higher rating for short bowel syndrome with high-output syndrome (including high-output stoma) under DC 7329 ''Intestine, large, resection of.''

The average length of the adult human small intestine is approximately 600 cm (236.22 in), as calculated from studies performed on cadavers. According to Lennard-Jones and to Weser, the range extends from 260 (102.4 in) to 800 cm (315 in).[1] Any disease, traumatic injury, vascular accident, or other pathology that leaves less than 200 cm (78.7 in) of viable small bowel or results in a loss of 50 percent or more of the small intestine places the patient at risk for developing short-bowel syndrome. Short-bowel syndrome is a disorder clinically defined by malabsorption, diarrhea, steatorrhea (fatty stool), fluid and electrolyte disturbances, and malnutrition. The common etiologic factor in all causes of short-bowel syndrome is the functional or anatomic loss of extensive segments of small intestine so that absorptive capacity is severely compromised. Burt Cagir, M.D., FACS, ''Short Bowel Syndrome,'' Medscape Reference (May 22, 2019), *https://emedicine.medscape.com/article/193391-overview#showall* (last viewed Oct. 10, 2019). In some cases, short bowel syndrome can result in high-output syndrome (including high-output stoma), in which the increased elimination and reduced absorption in the colon produce an imbalance in certain electrolytes. Therefore, VA intends to direct rating personnel to consider whether they may assign a higher evaluation under proposed DC 7329 (Intestine, large, resection of), where VA provides for a 100-percent evaluation when a high-output syndrome has resulted in more than 2 episodes of dehydration requiring intravenous hydration in the past 12 months.

Diagnostic Code 7329

VA currently evaluates resection of the large intestine (DC 7329) based on undefined criteria of whether symptoms are ''severe'' (40 percent), ''moderate'' (20 percent), or ''slight'' (10 percent). VA proposes new rating criteria that replace these subjective terms with more objective indicators based on the amount/level of resection, the need for chronic intravenous hydration following surgery, and other surgical outcomes, such as colostomy and ileostomy.

Specifically, VA proposes evaluations at the 10, 20, and 40 percent levels for partial colectomy (resection of only part of the large intestines). VA proposes a 10-percent evaluation for a partial colectomy with reanastomosis (reconnection of the intestinal tube). VA proposes a 20-percent evaluation for a similar level of resection (partial colectomy), but loss of the ileocecal valve, which prevents the flow of bacteria from the large intestine to the small intestine, and with subsequent recurrent diarrhea of more than 3 times per day. See ''Short Bowel Syndrome and Crohn's Disease,'' Crohn's & Colitis Foundation of America, 3 (March 2018), *https://www.crohnscolitisfoundation.org/sites/default/files/legacy/assets/pdfs/short-bowel-disease-crohns.pdf* (last visited Oct. 06, 2021). Without the ileocecal valve, individuals may develop small-growth bacteria, which manifest as diarrhea, bloating, nausea, and vomiting. Id.

VA proposes a 40-percent evaluation for a partial colectomy with permanent colostomy (an opening in the abdominal wall that is made during surgery). Individuals with colostomies must live with small bags attached to their abdomen. These bags collect stool and individuals must empty them. See ''Colostomy,'' in ''A.D.A.M. Medical Encyclopedia,'' PubMed Health, U.S. National Library of Medicine (Oct. 05, 2021), *http://www.nlm.nih.gov/medlineplus/ency/article/002942.htm* (last visited Oct. 06, 2021).

Additionally, VA proposes higher ratings, 60 and 100 percent, for veterans with total colectomies, or complete removal of the large intestines (colon). Total colectomy is a procedure most commonly done to treat many diseases of the colon such as colon cancer, Crohn's disease, ulcerative colitis, or massive abdominal trauma. One of the major functions of the intact large intestine is to absorb water, electrolytes, and vitamins. Following total colectomies, increased amount of fluid may be excreted, resulting in a chronic salt and water depletion, which can result in a number of metabolic changes. Christl SU and Scheppach W., Metabolic consequences of total colectomy. Scand J Gastroenterol Suppl. 1997;222:20–4. (last visited Oct. 06, 2021) In some cases, total colectomy is performed in conjunction with ileostomy surgery (small intestine known as the ileum). Permanent ileostomies are created when the large intestine (colon) is damaged and needs removing. Occasionally, and most frequently seen in cases with ileostomies, individuals may experience ''high-output syndrome,'' in which the high intestinal output increases the risk of dehydration and fluid-electrolyte abnormalities, and seriously impairs the quality of life. K. McDoniel et al., ''Use of clonidine to decrease intestinal fluid losses in patients with high-output short bowel syndrome,'' 28 J. of Parenteral Enteral Nutrition 4: 265–68 (July–Aug. 2004). *https://www.ncbi.nlm.nih.gov/pubmed/15291409* (last visited Oct. 06, 2021)

To adequately compensate veterans with total colectomies, VA proposes a 60-percent evaluation for a total colectomy without high output syndrome. VA proposes a 100-percent evaluation for a total colectomy with formation of ileostomy (permanent opening), high-output syndrome, and more than 2 episodes of dehydration requiring intravenous hydration in the past 12 months.

Diagnostic Code 7330

DC 7330 is currently titled ''Intestine, fistula of, persistent, or after attempt at operative closure.'' However, this title does not address the full range of intestinal fistulas. Therefore, VA proposes to retitle this code as ''Intestinal fistulous disease, external,'' and include a note explaining that this code applies to external fistulas that have developed as a consequence of abdominal trauma, surgery, radiation, malignancy, infection, or ischemia. David E. Stein, MD, et al., ''Intestinal Fistulas Treatment and Management,'' Medscape Reference (Mar 08, 2018), *http://emedicine.medscape.com/article/179444-overview* (last visited Oct 06, 2021).

Currently, the amount and frequency of fecal discharge determines the evaluation under DC 7330. VA assigns a 100-percent evaluation if fecal discharge is ''copious and frequent;'' a 60-percent evaluation for discharge that is ''constant or frequent;'' and a 30-percent evaluation for ''slight'' and ''infrequent.'' VA evaluates healed fistulas as peritoneal adhesions. As previously noted, terms such as ''frequent'' and ''slight'' are too vague to allow for consistent evaluations. Through this update, VA proposes to replace such references with more specific and objective criteria.

Therefore, VA proposes new rating criteria which would account for the

quantity of drainage from the fistula, as well as any need for nutritional support. Specifically, VA proposes a 30-percent evaluation for intermittent fecal discharge with persistent drainage that lasts longer than 3 months in the past 12 months. VA proposes a 60-percent evaluation for mandatory enteral nutritional support along with at least one of the following: Daily drainage equivalent to 3 or less standard ostomy bags (sized 130 cubic centimeters); or requiring fewer than 10 pad changes per days; or a Body Mass Index (BMI) between 16 and 18 with persistent drainage of any amount for more than 2 months in the past 12 months. VA proposes a 100-percent evaluation for mandatory total parenteral nutrition; or enteral nutrition along with at least one of the following: Daily discharge equivalent to 4 or more standard ostomy bags (sized 130 cubic centimeters); or requiring 10 or more pad changes per days; or both a BMI less than 16 and persistent draining for more than 1 month during the past 12 months.

Diagnostic Code 7332

Current DC 7332 applies to impairment of sphincter control of the rectum and anus. VA proposes to include a note to ensure that rating personnel understand that such control may include either the inability to retain or the inability to expel stool at an appropriate time and place.

Currently, VA assigns: A 100-percent evaluation if the loss of sphincter control is complete; a 60-percent evaluation if there is ''extensive leakage and fairly frequent involuntary bowel movements;'' a 30-percent evaluation for occasional involuntary bowel movements, such that changing a pad is necessary; a 10-percent evaluation for constant slight, or occasional moderate, leakage; and a 0-percent evaluation if the condition is healed or slight, without leakage. These criteria contain numerous indefinite terms, such as ''extensive,'' ''frequent,'' ''occasional,'' and ''slight,'' which are open to interpretation.

Therefore, VA proposes to use the widely-recognized Cleveland Clinic Incontinence Scale (CCIS), a standardized, evidence-based measure that accounts for difficulties with retention and expulsion of stool. This scale determines the severity of sphincter impairment by assigning a score between 0 (absent) and 4 (daily) in each of the following 5 categories: Incontinence to gas, incontinence to liquid, incontinence to solid, need to change a pad, and lifestyle changes. A.M. Kaiser, ''The McGraw-Hill Manual of Colorectal Surgery,'' 743 (2009).

VA's proposed rating criteria provide descriptive criteria that track the CCIS and objective means of determining functional impairment, such as a degree of stool incontinence, a need to change a pad, and lifestyle changes.

Specifically, VA proposes a 0-percent evaluation for a history of impairment of sphincter control, but without current symptoms. VA proposes a 10-percent evaluation when a veteran has incontinence or retention that is fully responsive to a physician-prescribed bowel program and requires either medication or special diet. Alternatively, VA may assign a 10-percent evaluation with incontinence to solids and/or liquids at least once every 6 months, and which requires wearing a pad at least once every 6 months.

VA proposes a 30-percent evaluation when a veteran has incontinence or retention that is fully responsive to a physician-prescribed bowel program and requires digital stimulation, medication (beyond laxative use), and special diet. Alternatively, a 30-percent evaluation is proposed with incontinence to solids and/or liquids 2 or more times per month, which requires changing a pad 2 or more times per month.

VA proposes a 60-percent evaluation when an individual has complete or partial loss of sphincter control characterized by incontinence or retention that is partially responsive to a physician-prescribed bowel program, which requires either surgery or digital stimulation, as well as prescribed medication (beyond laxative use) and special diet. Alternatively, VA may assign a 60-percent evaluation for incontinence to solids and/or liquids 2 or more times per week, which requires changing of a pad 2 or more times per week.

VA proposes a 100-percent evaluation when a veteran has complete loss of sphincter control characterized by incontinence or retention that is not responsive to a physician-prescribed bowel program and that requires either surgery or digital stimulation, with medication and diet. Alternatively, VA may assign a 100-percent evaluation for incontinence to solids and/or liquids 2 or more times per day, which requires changing a pad 2 or more times per day.

Diagnostic Code 7333

The current rating criteria for DC 7333, stricture of the rectum and anus, include: ''requiring colostomy'' for a 100-percent evaluation; ''great reduction of lumen, or extensive leakage'' for a 50-percent evaluation; and ''moderate reduction of lumen, or moderate constant leakage'' for a 30-percent evaluation. VA notes that this proposed rulemaking includes a separate DC, DC 7329, which adequately evaluates colostomy and ileostomy. As such, there is no longer a need to include colostomy in the rating criteria for DC 7333. Instead, VA proposes to add a Note (2), directing rating personnel to evaluate an ostomy as DC 7329 (Intestine, large, resection of).

Further, VA proposes to remove from the rating criteria the indefinite terms, such as ''great,'' ''extensive,'' and ''moderate,'' and instead replace them with objective criteria on the extent of reduction of the lumen (or the opening of the anal canal). Brisinda, G., et al., Surgical treatment of anal stenosis, World J Gastroenterol. 2009 Apr 28; 15(16): 1921–1928 (last visited Oct 06, 2021) *https://www.ncbi.nlm.nih.gov/pmc/articles/PMC2675080/*. Specifically, VA proposes: A 10-percent evaluation for luminal narrowing with or without straining during defecation, which is managed by dietary intervention; a 30-percent evaluation for reduction of the lumen by less than 50 percent, with straining during defecation; a 60-percent evaluation for the reduction of the lumen by at least 50 percent, with pain and straining during defecation; and a 100-percent evaluation for the inability to open the anus accompanied by the inability to expel solid feces. Carrington, Emma V., at al., Advances in the evaluation of anorectal function, Nat Rev Gastroenterol Hepatol. 2018 May; 15(5): 309–323., (last visited Oct. 06, 2021) *https://www.ncbi.nlm.nih.gov/pmc/articles/PMC6028941/*.

VA also advises in Note (1) that rating personnel may use this code to evaluate such conditions as dyssynergic defecation (levator ani) and anismus (functional constipation).

Diagnostic Code 7334

DC 7334, Prolapse of the rectum, currently provides the following evaluations: 50 percent for ''severe (or complete), persistent'' rectal prolapse; 30 percent for ''moderate, persistent or frequently recurring'' rectal prolapse; and 10 percent for mild rectal prolapse ''with constant slight or occasional moderate leakage.'' These criteria, employing such terms as ''mild,'' ''moderate,'' ''severe,'' or ''frequently recurring,'' are vague and subjective and may lead to inconsistent decisions.

VA proposes to remove the subjective language and apply new rating criteria based on precipitating factors, whether or not prolapse can be reduced, along with whether or not surgical repair can be performed. These elements are easily measured and represent accurate

proxies for occupational impairment. Seenivasagam, T., et al., Irreducible Rectal Prolapse: Emergency Surgical Management of Eight Cases and A Review of the Literature Med J Malaysia Vol 66 No 2 June 2011 (last visited Oct. 06, 2021) *http://www.e-mjm.org/2011/v66n2/Rectal_Prolapse.pdf*.

Specifically, VA proposes a 10-percent evaluation for spontaneously reducible prolapse that is not repairable. VA proposes a 30-percent evaluation for manually reducible prolapse of the rectum that is not repairable and occurs only after bowel movements, exertion, or performing the Valsalva maneuver. VA proposes a 50-percent evaluation for manually reducible prolapse that is not repairable and occurs at times other than bowel movements, exertion, or while performing the Valsalva maneuver. VA proposes to add a 100-percent evaluation for persistent prolapse of the rectum that is irreducible, regardless of whether it is repairable. A note would continue a 100-percent evaluation for 2 months following any repair and provide that VA would then evaluate the residual condition and apply 38 CFR 3.105(e) to any change.

VA also proposes a second note instructing rating personnel to provide a single evaluation under DC 7332 (Rectum and anus, impairment of sphincter control) when sphincter control is the predominant disability.

Diagnostic Code 7335

''Fistula-in-ano'' (DC 7335) is also known as ''anorectal fistula.'' The criteria in this DC also apply to anorectal abscesses. Therefore, VA proposes to add these names to the title to help rating personnel correctly apply the criteria.

Currently, VA evaluates this condition analogously to DC 7332 (Rectum and anus, impairment of sphincter control). VA assigns evaluations of 0, 10, 30, 60, or 100 percent based on loss of sphincter control and involuntary bowel movements. However, the current rating criteria for impairment of sphincter control does not consider the primary disabling effects of fistulas, which are abscesses, pain, and drainage. See J.L. Poggio, ''Fistula-in-Ano,'' Medscape Reference (Mar. 27, 2020), *http://emedicine.medscape.com/article/190234-overview#showall* (last visited Oct. 06, 2021). Therefore, VA proposes the following rating criteria to address the specific disabling effects of fistula-in-ano: A 10-percent evaluation for a single fistula with pain and discharge, but which is not accompanied by abscess; a 20-percent evaluation for 2 or more simultaneous fistulas with some drainage and pain, but not accompanied by abscess; a 40-percent evaluation for 1 or 2 simultaneous fistulas accompanied by abscess, drainage, and pain; and a 60-percent evaluation for more than 2 constant or near-constant fistulas with abscess, drainage, and pain, which are refractory to medical and surgical treatment.

Diagnostic Code 7336

VA currently evaluates hemorrhoids (DC 7336) by assigning: A 20-percent evaluation for ''persistent bleeding and with secondary anemia, or for fissures;'' a 10-percent evaluation for hemorrhoids that are ''large or thrombotic, irreducible, with excessive redundant tissue, evidencing frequent recurrences;'' and a 0-percent evaluation if they are ''mild or moderate.''

Current medical understanding recognizes there are differences in the expected presentations, exam findings, and treatment approaches between internal hemorrhoids and external hemorrhoids. See Scott C. Thornton,''Hemorrhoids'' Medscape Reference Sep. 24, 2019. *https://emedicine.medscape.com/article/775407-overview* (last visited Oct. 06, 2021). However, the current rating criteria do not differentiate between internal and external hemorrhoids. As such, VA proposes to include location in the rating criteria, as well as remove subjective terms such as ''mild,'' ''moderate,'' ''excessive,'' and ''frequent,'' which may lead to inconsistent evaluations. VA would replace them with more objective criteria that apply, in part, to any type of hemorrhoid and, in part, only to either internal or external hemorrhoids.

VA therefore proposes to assign a 10-percent evaluation for prolapsed internal hemorrhoids with 2 or less episodes per year of thrombosis, or for external hemorrhoids with three or more episodes per year of thrombosis. VA proposes a 20-percent evaluation for either of the following: Internal or external hemorrhoids with persistent bleeding and anemia, or continuously prolapsed internal hemorrhoids with 3 or more episodes per year of thrombosis.

Diagnostic Code 7337

Pruritis ani (DC 7337) is an itching and a compelling need to scratch the area around the anus. Therefore, for clarity, VA proposes to add ''anal itching'' to the title of this code.

This condition is generally a symptom of another condition, such as a skin disorder or hemorrhoids. Currently, VA directs rating personnel to evaluate pruritis ani under the criteria provided for the underlying condition. However, in many cases, this practice does not account for the actual itching. Therefore, VA proposes to associate specific rating criteria to better evaluate it, in addition to the underlying condition.

Specifically, VA proposes to assign a 0-percent evaluation for anal itching without bleeding or excoriation (tearing of the skin). VA proposes to assign a maximum 10-percent evaluation if the condition is associated with bleeding or excoriation.

Diagnostic Codes 7338, 7339 and 7340

Currently DC 7338 is titled as ''Hernia, inguinal,'' DC 7339 is titled ''Hernia, ventral, postoperative,'' and DC 7340 is titled ''Hernia, femoral.'' For the reasons set forth below, VA proposes to combine these three diagnostic codes into one diagnostic code, titled ''Hernia, including femoral, inguinal, umbilical, ventral, incisional, and other (but not including hiatal).'' These different types of hernia have similar functional impairments that arise from the weakness and/or defects of the abdominal wall and associated pain. Even though the location of the hernia may differ, this functional impairment results in disabilities that can be quantified using similar elements, permitting development of universally applicable evaluation criteria. The elements for the proposed evaluation criteria are both objective and measurable, which in turn ensures greater consistency of adjudication process (inter-rater reliability).

A hernia is defined as a protrusion, bulge, or projection of an organ or a part of an organ through the body wall that normally contains it. There are a lot of different types of hernias to include groin hernias (inguinal and femoral), umbilical, ventral, incisional, hiatal, and other less common types such as epigastric, giant abdominal, and spigelian. See WebMD Medical Reference, Medically Reviewed by Neha Pathak, MD on September 21, 2020, What Are the Types of Hernias? (last visited Oct. 06, 2021) *https://www.webmd.com/digestive-disorders/types-of-hernias#1*. Most of the hernias, with exception of hiatal hernias, share common features of functional impairment due to abdominal wall defect, surgical approaches, and treatment prognosis (functional outcomes). Hiatal hernias are different from the other hernias because they involve a diaphragm, an internal muscle that separates the chest from the abdominal cavity. With a hiatal hernia there is no visible protrusion, but symptoms may include heartburn, chest

pain, and a bad taste in the mouth, which are due to the upward flow of stomach acid, air, or bile. Hiatal hernia is rated under DC 7346.

VA proposes to combine evaluations currently done under DCs 7338, 7339, and 7340 under new retitled DC 7338, ''Hernia, including femoral, inguinal, umbilical, ventral, incisional, and other (but not including hiatal).'' VA takes into consideration pain or discomfort somewhere on the surface of the abdomen or in the groin area; however, a hernia can also be painless and only appear as a bulge. VA proposes to base its evaluation of disability due to new or recurrent hernia that is present for 12 months or more on: (1) The size of the abdominal wall defect, (2) the ability to surgically repair or reduce hernia (repairable versus irreparable), and (3) the degree of postoperative functional impairment.

VA proposes to evaluate the size of the abdominal wall defect using the concept of ''loss of domain'' (LOD). LOD expresses the relationship between the size of a hernia and abdominal volume (contents of the abdominal cavity) where herniated contents of the abdominal cavity permanently inhabit the hernia sac. See Parker, S. G., et al., What Exactly is Meant by ''Loss of Domain'' for Ventral Hernia? Systematic Review of Definitions. World J Surg. 2019; 43(2): 396–404. (last visited Oct. 06, 2021) *https://www.ncbi.nlm.nih.gov/pmc/articles/PMC6329734/*. LOD is widely used to predict operative difficulty and success, which in turn is indicative of any future functional impairment and associated disability. See E. Tanaka ''A computerized tomography scan method for calculating the hernia sac and abdominal cavity volume in complex large incisional hernia with loss of domain.'' Hernia, vol. 14, Pg 64. 2010. (last visited Oct. 06, 2021) *https://link.springer.com/article/10.1007%2Fs10029-009-0560-8*. Multiple sources identify the ''cut-off'' threshold or percentage proportion above which LOD becomes clinically significant (*i.e.* the point at which closing an abdominal defect becomes very difficult and development of complications is more likely), when a hernia's size is equal to 15 cm or greater in one dimension. See Buenafe A. A., Lee-Ong, A., Lateral release in the repair of large ventral hernia. Ann Laparosc Endosc Surg 2019; 4:24 (last visited Oct. 06, 2021) *http://ales.amegroups.com/article/view/5038/html*.

VA proposes to evaluate the degree of postoperative functional impairment based on the Carolinas Comfort Scale (CCS). CCS is a validated, disease-specific, quality of life (QOL) questionnaire developed for patients undergoing hernia repair, which takes into consideration an individual's ability to (1) bend over, (2) perform activities of daily living (ADLs), (3) walk, and (4) climb stairs in the presence or absence of postoperative pain. The presence of pain during these activities increases the odds that a patient will not return to work. See B. T. Heniford, ''Carolinas Comfort Scale as a Measure of Hernia Repair Quality of Life,'' Annals of Surgery, vol 267(1), Pg. 175. January 2018. (last visited Oct. 06, 2021) *https://insights.ovid.com/pubmed?pmid=27655239*. Furthermore, pain is the most common symptom associated with hernia repair and can severely affect an individual's functional status. See L. Chung, et. al., ''Pain and its effects on physical activity and quality of life before operation in patients undergoing elective inguinal and ventral hernia repair,'' Am J Surg vol 208(3), Pg. 406–411. 2014. The CCS questionnaire proved to be a reliable instrument for assessing quality of life and functional impairment after hernia repair and has become a predominant outcome measure in this discipline of surgery.

VA proposes a 100-percent evaluation for new or recurrent irreparable hernia, which is present for 12 months or more, and with both of the following features and symptoms that are present for 12 months or more: (1) Hernia size equal to 15 cm or greater in one dimension; and (2) pain is present when performing at least three of the following activities: Bending over, ADLs, walking, and climbing stairs. In similar cases where pain is present when performing two of the aforementioned activities, VA proposes a 60-percent disability evaluation.

VA proposes a 30-percent evaluation for new or recurrent irreparable hernia, which is present for 12 months or more, and with both of the following features and symptoms that are present for 12 months or more: (1) Size is equal to 3 cm or greater but less than 15 cm in one dimension; and (2) pain is present when performing at least two of the aformentioned activities. In similar cases where pain is present when performing one of the aforementioned activities, VA proposes a 20-percent disability evaluation.

VA proposes a 10-percent disability evaluation for new or recurrent irreparable hernia, which is present for 12 months or more and with hernia size smaller than 3 cm. VA proposes a 0-percent evaluation for asymptomatic hernia, which is either present and repairable, or was repaired.

Diagnostic Code 7344

VA proposes to add a note to DC 7344 clarifying that the conditions evaluated under DC 7344 ''Benign neoplasms, exclusive of skin growths'' include lipoma, leiomyoma, colon polyps, and villous adenoma. VA would not substantively change the instruction to evaluate the predominant disability or the specific residuals after treatment under an appropriate DC.

Diagnostic Code 7345

Currently, DC 7345 is titled ''Chronic liver disease without cirrhosis (including Hepatitis B, chronic active hepatitis, autoimmune hepatitis, hemochromatosis, drug-induced hepatitis, etc., but excluding bile duct disorders and Hepatitis C).'' VA proposes to simplify this title to ''Chronic liver disease without cirrhosis,'' which would be consistent with current medical terminology.

The current rating criteria for DC 7345 assigns evaluations as follows: A 100-percent evaluation for ''near-constant debilitating symptoms (such as fatigue, malaise, nausea, vomiting, anorexia, arthralgia, and right upper quadrant pain);'' a 60-percent evaluation for ''daily fatigue, malaise, and anorexia with substantial weight loss (or other indication of undernutrition), and hepatomegaly; or incapacitating episodes (with symptoms such as fatigue, malaise, nausea, vomiting, anorexia, arthralgia, and right upper quadrant pain) having a total duration of at least 6 weeks during the past 12-month period, but not occurring constantly;'' a 40-percent evaluation for ''daily fatigue, malaise, and anorexia, with minor weight loss and hepatomegaly, or incapacitating episodes (with symptoms such as fatigue, malaise, nausea, vomiting, anorexia, arthralgia, and right upper quadrant pain) having a total duration of at least 4 weeks, but less than 6 weeks, during the past 12-month period;'' a 20-percent evaluation for ''daily fatigue, malaise, and anorexia (without weight loss or hepatomegaly) requiring dietary restriction or continuous medication; or incapacitating episodes (with symptoms such as fatigue, malaise, nausea, vomiting, anorexia, arthralgia, and right upper quadrant pain) having a total duration of at least 2 weeks, but less than 4 weeks, during the past 12-month period;'' a 10-percent evaluation for ''intermittent fatigue, malaise, and anorexia, or incapacitating episodes (with symptoms such as fatigue, malaise, nausea, vomiting, anorexia, arthralgia, and right upper quadrant pain) having a total duration of at least

1 week, but less than 2 weeks, during the past 12-month period;'' and a 0-percent evaluation if the condition is not symptomatic.

Current rating criteria contain numerous references to subjective factors, such as what constitutes an ''incapacitating episode'' and how long it lasts, which may contribute to inconsistent adjudication decisions. Similarly, the difference between ''minor'' versus ''substantial'' weight loss is ambiguous. Therefore, VA proposes to include more objective factors, such as required medication and laboratory evidence of liver damage. VA also intends to reduce the number of disability levels from six (0, 10, 20, 40, 60, and 100) to five (0, 20, 40, 60, and 100) because using more objective evidence-based factors requires clearer distinctions between disability levels. Veterans currently rated under DC 7345 would not see their disability evaluations change solely because of these proposed revisions. Additionally, VA takes into consideration significant advances in the treatment and management of patients with viral hepatitis which occurred during the last decade. Two major classes of antiviral therapeutics have been adopted to treat the infection: Drugs that directly interfere with virus replication (direct antiviral agents) and drugs that modulate antiviral immune response (immunomodulatory drugs). As a result, people experience better outcomes, fewer side effects and shorter treatment times. For example, with the use of new antiviral drugs, hepatitis C has become a curable disease in more that 95 percent of the treated patients. See Roderburg, C. et al., Antiviral Therapy in Patients with Viral Hepatitis and Hepatocellular Carcinoma: Indications and Prognosis. Visc Med. 2016 Apr; 32(2): 121–126. (last visited Oct. 06, 2021) *https://www.ncbi.nlm.nih.gov/pmc/articles/PMC4926886/*.

VA recognizes that occupationally relevant symptoms, such as fever, nausea, muscle aches and soreness, joint pain, and profound fatigue, are common during hepatitis treatment. In some instances, headache, insomnia, weight loss, or difficulties with memory or concentration, can also occur. Bertoletti, A. and Le Bert, N., Immunotherapy for Chronic Hepatitis B Virus Infection, Gut Liver. 2018 Sep; 12(5): 497–507. (last visited Oct. 06, 2021) *https://www.ncbi.nlm.nih.gov/pmc/articles/PMC6143456/, https://pubmed.ncbi.nlm.nih.gov/29316747/*. Furthermore, treatment total effectiveness (''cure'') or sustained off-treatment control (''functional cure'') of hepatitis infection is determined by the inability to detect virus load for 6 months after discontinuing therapy. VA proposes to maintain a 100-percent evaluation during treatment with both parenteral (infusion) direct antiviral agents (such as entecavir, lamivudine, tenofovir, telbivudine, and other) and parenteral immunomodulatory drugs (such as interferon and other). In a new Note (1), VA proposes to continue a 100-percent evaluation for six months following discontinuance of treatment (parenteral antiviral therapy and parenteral immunomodulatory drugs). Thereafter, six months after discontinuance of parenteral antiviral therapy and parenteral immunomodulatory drugs, VA proposes to determine the appropriate disability rating by mandatory VA exam. Lastly, VA proposes to apply the provisions of § 3.105(e) to any change in evaluation based upon that or any subsequent examination.

VA proposes a 60-percent evaluation for progressive chronic liver disease that requires continuous medication and causes substantial weight loss and at least two of the following symptoms: Daily fatigue, malaise (feeling ill), anorexia (loss of appetite), hepatomegaly (enlarged liver), pruritus (itch), and arthralgia (joint pain). VA proposes a 40-percent evaluation for progressive chronic liver disease that requires continuous medication and causes minor weight loss and at least two of the following symptoms: Daily fatigue, malaise, anorexia, hepatomegaly, pruritus, and arthralgia. VA proposes a 20-percent evaluation for chronic liver disease accompanied by at least one of the following symptoms: Intermittent fatigue, malaise, anorexia, hepatomegaly, or pruritus. VA proposes to assign a 0-percent evaluation for a history of liver disease without current symptoms.

VA proposes to retain existing Note (1) but re-designate it as Note (4). VA recognizes that some individuals may not be able to receive parenteral (infusion) antiviral or immunomodulatory therapy or a second oral antiviral medication, despite physician recommendation, because the use of such medications may be contraindicated in their specific case. Therefore, VA proposes Note (2) that instructs rating personnel to evaluate such cases under DC 7312 ''Cirrhosis of the liver.'' To further assist VA adjudicators in delivering consistent rating decisions, VA proposes an explanatory Note (3), which provides a list of the disorders to be evaluated underusing this diagnostic code: Hepatitis B, Primary Biliary Cirrhosis (PBC), Primary Sclerosing Cholangitis (PSC), autoimmune liver disease, Wilson's disease, Alpha-1-antitrypsin deficiency, hemochromatosis, drug-induced hepatitis, and non-alcoholic steatohepatitis (NASH). The proposed Note (3) would also contain the information discussed in current Note (3), namely, that serologic testing must confirm Hepatitis B. Additionally, Note (3) would clarify that while VA would evaluate Hepatitis C using the criteria under DC 7345, rating personnel should code it under DC 7354 ''Hepatitis C (or non-A, non-B hepatitis)'' so VA can track the claims and decisions regarding Hepatitis C in the veterans' population.

Diagnostic Code 7346

Hiatal hernias occur when part of the stomach protrudes upwards through the diaphragm (the muscle across the bottom of the rib cage that helps control breathing). Symptoms are rare, but when present are due to the upward flow of stomach acid, air, or bile. See ''Hiatal Hernia,'' in ''A.D.A.M. Medical Encyclopedia,'' PubMed Health, U.S. National Library of Medicine (April 24, 2017), *https://medlineplus.gov/ency/article/001137.htm* (last accessed Nov. 6, 2018). Therefore, VA proposes to retitle this DC as ''Hiatal hernia and paraesophageal hernia'' to more accurately reflect the conditions VA is likely to evaluate under this code.

VA currently assigns evaluations for hiatal hernias as follows: A 60-percent evaluation for symptoms of ''pain, vomiting, material weight loss, and hematemesis or melena with moderate anemia, or other symptom combinations productive of severe impairment of health;'' a 30-percent evaluation for ''persistently recurrent epigastric distress with dysphagia, pyrosis, and regurgitation, accompanied by substernal or arm or shoulder pain, productive of considerable impairment of health;'' and a 10-percent evaluation for 2 or more of the same symptoms as for the 30 percent evaluation, but of less severity.

However, as discussed above, the medical community now recognizes that impairment of the esophageal sphincter creates the majority of symptoms. See Dakkak, supra. As such, VA proposes to delete the existing rating criteria and instead instruct rating personnel to evaluate this condition under DC 7203 (Esophagus, stricture of).

Diagnostic Code 7347

Currently, DC 7347 is titled ''Pancreatitis.'' Acute pancreatitis can be a very serious, even life threatening, condition but most individuals can expect complete recovery. Nevertheless, acute pancreatitis can become chronic if

pancreatic tissue sustains irreversible damage and develops scarring (fibrosis). Therefore, VA proposes to retitle this DC as ''Pancreatitis, chronic'' to more adequately reflect long-term functional impairment of this condition.

The pancreas is the organ that produces enzymes necessary for digestion. The inflammation from chronic pancreatitis disrupts the production of necessary digestive enzymes, creating pancreatic insufficiency. Etemad, B. and Whitcomb, D.C., Chronic pancreatitis: Diagnosis, classification, and new genetic developments. Gastroenterology 2001: Diagnostics & Therapeutics. Gastroenterology, Volume 120, Issue 3, February 2001, Pages 682–707 (last visited Oct. 06, 2021) *https://www.sciencedirect.com/science/article/pii/S001650850100796X?via%3Dihub*. Abdominal pain, with intermittent attacks of severe pain, is the most prevalent symptom in individuals with chronic pancreatitis. Other symptoms associated with chronic pancreatitis include diarrhea and weight loss. Chronic pancreatitis is a severe progressive debilitating illness that can worsen over time, leading to permanent impairment. The clinical picture is complex, involving multiple systems with occasional extreme debility and confinement.

The current criteria for assigning evaluations are as follows: A 100-percent evaluation for frequently recurring disabling attacks of abdominal pain with few pain-free intermissions and with steatorrhea (excess fat in the stools), malabsorption, diarrhea, and severe malnutrition; a 60-percent evaluation for frequent attacks of abdominal pain, loss of normal body weight, and other findings showing continuous pancreatic insufficiency between acute attacks; a 30-percent evaluation for a moderately severe condition, with at least 4–7 typical attacks of abdominal pain per year with good remission between attacks; and a 10-percent evaluation for at least 1 recurring attack of typical severe abdominal pain in the past year.

VA proposes new rating criteria that incorporate medical advances in pain management, digestive enzyme replacement, and assisted nutrition (tube enteral feeding). Additionally, the new rating criteria accounts for complications resulting from pancreatic insufficiency, the number of annual episodes, pain management, and hospitalizations.

VA proposes to remove the current 10-percent disability level, which accounts for a single attack of abdominal pain in the past year, which does not require any treatment or cause any long-term complications. This level of functional impairment would have minimal to no impact on earning capacity. VA proposes a 30-percent disability evaluation for confirmed diagnosis of pancreatitis with at least one episode per year of abdominal or mid-back pain that requires an ongoing outpatient medical treatment for pain, digestive problems, or management of related complications such as cyst or pseudocyst, intestinal obstruction, or ascites. VA proposes a 60-percent evaluation for three or more episodes of abdominal or mid-back pain per year, with at least one episode per year requiring hospitalization for management of complications related to abdominal pain or requiring enteral feeding. VA proposes a 100-percent evaluation for daily episodes of abdominal or mid-back pain requiring 3 or more hospitalizations per year, as well as pain management by a physician, with maldigestion and malabsorption requiring dietary restriction and pancreatic enzyme supplementation.

In addition to the revised rating criteria, VA proposes to make nonsubstantive changes to the existing Note (1) requiring laboratory evidence or clinical studies confirming pancreatitis as the cause of abdominal pain, as many other causes for such pain may exist. VA proposes to delete the current Note (2). A newly proposed code, DC 7357 (Post-pancreatectomy syndrome), eliminates the need to instruct personnel to rate total or partial pancreatectomy a minimum of 30 percent.

VA proposes replacing the current Note (2) with a note instructing personnel to separately rate diabetes due to pancreatic insufficiency under DC 7913 (Diabetes mellitus).

Diagnostic Code 7348

DC 7348, Vagotomy with pyloroplasty or gastroenterostomy, evaluates complications that may occur following certain abdominal surgeries. At one time, physicians commonly used these procedures to treat gastric ulcer disease. See R.A. Hejazi et al., ''Postsurgical Gastroparesis,'' in ''Gastroparesis: Pathophysiology, Presentation, and Treatment,'' 194 (Henry P. Parkman and Richard W. McCallum eds. 2012). However, medication now treats the majority of gastric ulcer disease. Today, vagotomy most often follows lung transplant surgery. Id. Therefore, VA proposes to remove the current reference to ''recurrent ulcer'' in the criteria for a 20-percent evaluation, so it would then read simply ''with incomplete vagotomy.'' VA would not change the remainder of the criteria.

Rating personnel are likely to continue to encounter veterans who experienced permanent complications after surgeries to treat gastric ulcers. Therefore, VA would retain the existing note on evaluating recurrent gastric ulcer following complete vagotomy. However, to maintain consistency with the overall amendments, the note would refer rating personnel to the revised DC 7304 (Peptic ulcer disease), which VA is proposing to expand to include all ulcer disease, rather than DC 7305 (Ulcer, duodenal), which VA is proposing to discontinue.

The current note under DC 7348 also instructs rating personnel to evaluate dumping syndrome under DC 7308. As explained above in DC 7308, VA believes that the most appropriate criteria for evaluating postgastrectomy syndromes are in the new DC 7303, and proposes to update the current note accordingly.

New Diagnostic Code 7350

A liver abscess is an infection of the liver that generally produces symptoms of fever, chills, right upper quadrant pain, loss of appetite, and a general feeling of poor health. Effective treatment generally involves drainage of the abscess followed by antibiotics, although prolonged antibiotic treatment may be used exclusively if the individual is too ill to tolerate the drainage procedure. Ruben Peralta, MD et al., ''Liver Abscess,'' Medscape Reference (Mar. 27, 2020) *http://emedicine.medscape.com/article/188802* (last visited Oct. 06, 2021). Without treatment, liver abscess results in death. Id.

Liver abscess is relevant to veterans because it is associated with travel to developing countries. M.P. Sharma et al., ''Amoebic Liver Abscess,'' 4 J. of Indian Acad. of Clinical Med., 107 (Apr. 2003). VA proposes a new DC for the three major types of liver abscess, including pyogenic (infectious), amebic (due to Entamoeba hystolytica), and fungal (related to Candida albicans and others). VA proposes a new note under DC 7350 to inform rating personnel of the various types of abscesses considered under the code.

VA proposes to assign a 100-percent evaluation for six months from the onset of this condition (date of initial diagnosis) followed by a mandatory VA examination to determine the appropriate evaluation based on any residuals. VA would apply the provisions of § 3.105(e) to any reduction in evaluation. Furthermore, despite the availability of anti-microbial agents,

modern antibiotics, and recent drainage techniques, liver abscesses can still lead to severe debilitation and systemic manifestations of anemia, infection, and liver function abnormalities that generally resolve after a convalescence period lasting anywhere from 6 to 12 months. Therefore, VA proposes to rate the condition based on chronic residuals under the appropriate body system.

Diagnostic Code 7351

VA proposes to maintain the existing criteria for liver transplant (DC 7351), but intends to add a minimum 60-percent evaluation for those awaiting retransplantation. Complications, such as side effects of necessary medications, from an earlier transplant can contribute significantly to functional impairment. Johnny C. Hong, MD, FACS et al., ''Predictive Index for Long-Term Survival After Retransplantation of the Liver in Adult Recipients: Analysis of a 26-Year Experience in a Single Center'', 254 Annals of Surgery, 444 (Sept. 2011).

VA also proposes to amend the existing note to direct rating personnel to evaluate the residuals of any recurrence of the underlying liver disease under the appropriate DC, and combine that evaluation with other post-transplant residuals under the appropriate body system(s), subject to the provisions of § 4.14 and 4.114.

New Diagnostic Code 7352

VA proposes to add a DC for pancreatic transplant. VA published its existing rating schedule before surgeons first performed the procedure. They now perform it with sufficient frequency to warrant inclusion. Dixon B Kaufman MD, Ph.D., ''Pancreas Transplantation'', Medscape Reference (Jul. 12, 2021), *http://emedicine.medscape.com/article/429408* (last visited Oct. 06, 2021).

VA proposes to assign a 100-percent evaluation beginning on the day of hospital admission for transplant surgery. In addition, a note would require a VA examination one year following hospital discharge to determine the appropriate evaluation based on residuals, subject to the provisions of § 3.105(e). VA would assign a minimum 30-percent evaluation for residuals of the necessary long-term immunosuppressive medication. This practice conforms to the concept of horizontal equity in other systems, such as a minimum 30 percent for cardiac transplantation. In addition to the reference above by Kaufman, see ''Outcomes of Recipients With Pancreatic Transplant Alone Who Develop End-Stage Renal Disease: S.K. Singh; S.J. Kim et. al. Am. Journal of Transplantation 2016: 16(2):535–540.

Diagnostic Code 7354

The current rating criteria for Hepatitis C (or non-A, non-B hepatitis) are identical to that for DC 7345 (Chronic liver disease without cirrhosis). VA does not intend to apply different criteria for Hepatitis C than for other types of hepatitis. For simplicity, VA proposes to delete the existing rating criteria associated with this code and replace it with a statement to evaluate Hepatitis C as DC 7345 (Chronic liver disease without cirrhosis). As noted above, VA would retain the separate DC for Hepatitis C for purposes of tracking information about claims and rating decisions.

New Diagnostic Code 7355

Celiac disease, also known as gluten-sensitive enteropathy, is a chronic autoimmune disorder with gastrointestinal and extraintestinal (systemic) manifestations. Individuals with celiac disease cannot tolerate gluten (a protein commonly found in wheat, rye, and barley) and experience symptoms that interfere with the digestion and absorption of food nutrients. Gastrointestinal symptoms include chronic diarrhea, abdominal bloating and pain, vomiting, constipation, flatulence, and pale, foul-smelling, or fatty stool (steatorrhea). The prognosis for patients with correctly diagnosed and treated celiac disease is excellent. However, the prognosis for patients with celiac disease who are not responding to gluten withdrawal and corticosteroid treatment is generally poor. Furthermore, celiac disease with poor response to the treatment has significant and often debilitating maldigestive and malabsorption syndrome that affects multiple organ systems. See ''Celiac Disease,'' in National Digestive Diseases Information Clearinghouse, National Institute of Diabetes and Digestive and Kidney Diseases, NIH Publication No. 08–4269 (Oct 2020), *https://www.niddk.nih.gov/health-information/digestive-diseases/celiac-disease/definition-facts* (last visited Oct. 06, 2021). The main systemic (extraintestinal) manifestations of celiac disease are based on malabsorption syndrome. Malabsorption refers to the impaired absorption of nutrients and includes defects that occur both during the digestion and absorption of food nutrients in the gastrointestinal tract. Sometimes, absorption of a single nutrient component may be impaired (such as lactose intolerance due to lactase deficiency). However, in the case of systemic diseases such as celiac disease or Crohn's disease (which affects the whole intestine), the absorption of almost all nutrients is impaired. In severe cases, malabsorption causes significant weight loss, anemia, hypocalcemia (low level of calcium in the blood), osteopenia and osteoporosis (loss of calcium from bones), Vitamin B deficiency, dermatitis herpetiformis (a skin rash), lymph node enlargement, hormonal disorders (amenorrhea and infertility in women and impotence and infertility in men), and a three-fold increased risk for development of intestinal T cell-non Hodgkin's lymphoma, and other gastrointestinal cancers such as adenocarcinoma of the small intestine and pharynx. C. Catassi et al., ''Risk of Non-Hodgkin's Lymphoma in Celiac Disease,'' 287(11) J. of the Am. Med. Asscn., 1413–19 (2002).

In its new rating criteria, VA proposes to account for both systemic (extraintestinal) and digestive manifestations of the disease. VA proposes a 30-percent evaluation for malabsorption syndrome with chronic diarrhea that is managed by medically-prescribed dietary intervention such as a prescribed gluten-free diet, and without nutritional deficiencies. VA proposes a 50-percent evaluation for individuals with malabsorption syndrome that causes chronic diarrhea managed by medically-prescribed dietary intervention, such as a prescribed gluten-free diet, with present nutritional deficiencies due to lactase and pancreatic insufficiency; and with systemic manifestations including but not limited to, weakness and fatigue, dermatitis, lymph node enlargement, hypocalcemia, low vitamin levels, or atrophy of the inner intestinal lining shown on biopsy. VA proposes an 80-percent evaluation for individuals with malabsorption syndrome that causes weakness which interferes with ADLs. Additionally, these individuals exhibit weight loss, which results in wasting and nutritional deficiencies, and systemic manifestations of the disease including, but not limited to, weakness and fatigue, dermatitis, lymph node enlargement, hypocalcemia, low vitamin levels, anemia related to malabsorption, and episodes of abdominal pain and diarrhea due to lactase deficiency or pancreatic insufficiency. In addition to these rating criteria, VA proposes to include a Note (1) directing that appropriate serum antibody testing or endoscopy with biopsy (intestinal) must confirm the diagnosis of celiac disease. For evaluation of celiac disease with the

predominant disability of malabsorption (inability to absorb nutrients from a diet), VA proposes to add a second note directing rating personnel to select the greater evaluation between the rating criteria under DC 7328 and the criteria under new DC 7355.

New Diagnostic Code 7356

VA proposes a new code to evaluate and track a group of gastrointestinal conditions characterized by chronic or recurrent symptoms that are unexplained by any structural, endoscopic, laboratory, or other objective signs of injury or disease. In the American veterans population, these gastrointestinal conditions are often associated with service in the Southwest Asia theater of operations during the Persian Gulf War. Gastrointestinal dysmotility syndrome is a broad term which is used to cover a spectrum of gastrointestinal disorders with abnormal intestinal contractions (spasms or intestinal paralysis). Coordinated movements of the esophagus, stomach, and intestines are required to digest and move intestinal contents along the digestive tract. See Paine. P., et al., Review article: The assessment and management of chronic severe gastrointestinal dysmotility in adults. (last visited Oct. 06, 2021) *https://onlinelibrary.wiley.com/doi/full/10.1111/apt.12496*. These digestive disorders occur in the absence of tissue damage in the gastrointestinal tract and are functional, rather than structural, in nature. At the request of Congress, the Institute of Medicine (IOM) extensively studied conditions resulting from deployment during the 1991 Persian Gulf War. Institute of Medicine (US) Committee on Gulf War and Health: Health Effects of Serving in the Gulf War, Update 2009. Washington (DC): National Academies Press (US); 2010. (last visited Oct. 06, 2021) *https://www.ncbi.nlm.nih.gov/books/NBK220118/*. In its reports, the IOM determined that Gulf War service causes, ''post-traumatic stress disorder (PTSD) and that service is associated with multisymptom illness; gastrointestinal disorders such as irritable bowel syndrome; alcohol and other substance abuse; and anxiety disorders and other psychiatric disorders.'' The IOM report identified and validated functional digestive disorders as disabling and provided the basis for VA to presume their relationship to military service. ''Presumptive Service Connection for Diseases Associated with Service in the Southwest Asia Theater of Operations in the Persian Gulf War: Functional Gastrointestinal Disorders,'' 76 FR 41696 (July 15, 2011). Therefore, VA proposes a new diagnostic code 7356, Gastrointestinal dysmotility syndrome, to evaluate a group of these functional digestive disorders.

VA proposes evaluation of gastrointestinal motility disorders based on the most common presentations, including but not limited to, abdominal pain, bloating, feeling of epigastric fullness, dyspepsia, nausea and vomiting, regurgitation, constipation, diarrhea, episodes of intestinal obstruction and pseudo-obstruction (absence of mechanical obstruction), and poor gastric emptying. Additionally, VA would take into consideration the presence of nutritional compromise (*i.e.,* requirement for assisted parental nutrition (tube feeding) and/or total parental nutrition (TPN)) and response to treatment (*i.e.,* requirement for ambulatory and/or inpatient care). See Mia L Manabat ''Intestinal Motility Disorders,'' Medscape Reference, (Sep. 16, 2020). *https://emedicine.medscape.com/article/179937-overview* (last visited Oct. 06, 2021). This evaluation is consistent with other disability ratings which require similar levels of nutritional support such as TPN or tube feeding.

Specifically, VA proposes a 10-percent evaluation for intermittent abdominal pain with epigastric fullness associated with bloating, and without evidence of a structural gastrointestinal disease. VA proposes a 30-percent evaluation for symptoms of pseudo-obstruction (CIPO) as well as symptoms of intestinal motility disorder such as abdominal pain, bloating, feeling of epigastric fullness, dyspepsia, nausea and vomiting, regurgitation, constipation, and diarrhea, managed by ambulatory care and requiring prescribed dietary management or manipulation. VA proposes a 50-percent evaluation where intermittent tube feeding is required and the individual has recurrent emergency treatment for episodes of intestinal obstruction or regurgitation due to poor gastric emptying, abdominal pain, recurrent nausea, or vomiting. VA proposes an 80-percent evaluation for complete dependence on total parenteral nutrition (TPN) or continuous tube feeding for nutritional support. VA proposes to add a note that this DC is applicable to illnesses associated with 38 CFR 3.317(a)(2)(i)(B)(3) (medically unexplained chronic multisymptom illness involving functional gastrointestinal disorders in Persian Gulf veterans), other than those which can be evaluated under DC 7319.

New Diagnostic Code 7357

As noted above, VA proposes to add a DC to § 4.114 to evaluate veterans that have post-pancreatectomy syndromes, which follow therapeutic pancreatectomies either to remove cancers or to treat complications of chronic pancreatitis. The post-pancreatectomy condition resulting from the removal of the pancreas can vary in degrees of severity, but is generally less severe than prior to surgery. See Lewis Rashid and Vic Velanovich, ''Symptomatic change and gastrointestinal quality of life after pancreatectomy,'' 14(1) HPB 9, 11 (Jan. 2012), *http://www.ncbi.nlm.nih.gov/pmc/articles/PMC3252985/pdf/hpb0014-0009.pdf* (last visited Oct. 06, 2021). See also D.G. Heidt et al., ''Total Pancreatectomy: Indications, Technique, Sequelae,'' 11 J. of Gastrointestinal Surgery 209 (2007).

VA proposes to rate this condition based on the highest evaluation under either DC 7347 (Pancreatitis, chronic), DC 7303 (Chronic complications of upper gastrointestinal surgery, including operations performed on the esophagus, stomach, pancreas, and small intestine, including bariatric surgery), or residuals, such as malabsorption (DC 7328), diarrhea (DC 7319 or 7326), diabetes (DC 7913), or chronic pancreatitis pain (DC 7347). Consistent with the current rating schedule, VA would assign a minimum rating of 30 percent if no higher evaluation is warranted under this or other DCs.

Executive Orders 12866 and 13563

Executive Orders 12866 and 13563 direct agencies to assess the costs and benefits of available regulatory alternatives and, when regulation is necessary, to select regulatory approaches that maximize net benefits (including potential economic, environmental, public health and safety effects, and other advantages; distributive impacts; and equity). Executive Order 13563 (Improving Regulation and Regulatory Review) emphasizes the importance of quantifying both costs and benefits, reducing costs, harmonizing rules, and promoting flexibility. The Office of Information and Regulatory Affairs has determined that this rule is an economically significant regulatory action under Executive Order 12866. The Regulatory Impact Analysis associated with this rulemaking can be found as a supporting document at *www.regulations.gov*.

Regulatory Flexibility Act

The Secretary hereby certifies that this rule will not have a significant economic impact on a substantial number of small entities as they are defined in the Regulatory Flexibility Act (5 U.S.C. 601–612). The certification is based on the fact that small entities or businesses are not affected by revisions to the VASRD. Therefore, pursuant to 5 U.S.C. 605(b), the initial and final regulatory flexibility analysis requirements of 5 U.S.C. 603 and 604 do not apply.

Unfunded Mandates

The Unfunded Mandates Reform Act of 1995 requires, at 2 U.S.C. 1532, that agencies prepare an assessment of anticipated costs and benefits before issuing any rule that may result in the expenditure by State, local, and tribal governments, in the aggregate, or by the private sector, of $100 million or more (adjusted annually for inflation) in any given year. This proposed rule would have no such effect on State, local, and tribal governments, or on the private sector.

Paperwork Reduction Act

This document contains no provisions constituting a collection of information under the Paperwork Reduction Act (44 U.S.C. 3501–3521).

Catalog of Federal Domestic Assistance Numbers and Titles

The Catalog of Federal Domestic Assistance program numbers and titles for this rule are 64.104, Pension for Non-Service-Connected Disability for Veterans; 64.109, Veterans Compensation for Service-Connected Disability; and 64.110, Veterans Dependency and Indemnity Compensation for Service-Connected Death.

List of Subjects in 38 CFR Part 4

Disability benefits, Pensions, Veterans.

Signing Authority

Denis McDonough, Secretary of Veterans Affairs, approved this document on July 6, 2021, and authorized the undersigned to sign and submit the document to the Office of the Federal Register for publication electronically as an official document of the Department of Veterans Affairs.

Luvenia Potts,

Regulation Development Coordinator Office of Regulation Policy & Management, Office of General Counsel, Department of Veterans Affairs.

For the reasons set out in the preamble, VA proposes to amend 38 CFR part 4 as set forth below:

PART 4—SCHEDULE FOR RATING DISABILITIES

Subpart B—Disability Ratings

■ 1. The authority citation for part 4, subpart B, continues to read as follows:

Authority: 38 U.S.C. 1155, unless otherwise noted.

§ 4.110 [Removed and Reserved]

■ 2. Remove and reserve § 4.110.

§ 4.111 [Removed and Reserved]

■ 3. Remove and reserve § 4.111.

■ 4. Revise § 4.112 to read as follows:

§ 4.112. Weight loss and nutrition.

The following terms apply when evaluating conditions in 38 CFR 4.114:

(a) *Weight loss.* ''Substantial weight loss'' means involuntary loss greater than 20 percent of an individual's baseline weight sustained for three months with diminished quality of self-care or work tasks. The term ''minor weight loss'' means involuntary weight loss between 10 and 20 percent of an individual's baseline weight sustained for three months with gastrointestinal-related symptoms, involving diminished quality of self-care or work tasks, or decreased food intake. The term ''inability to gain weight'' means substantial weight loss with the inability to regain it despite following appropriate therapy.

(b) *Baseline weight:* ''Baseline weight'' means the clinically documented average weight for the two-year period preceding the onset of illness or, if relevant, the weight recorded at the veteran's most recent discharge physical. If neither of these weights is available or currently relevant, then use ideal body weight as determined by either the Hamwi formula or Body Mass Index tables, whichever is most favorable to the veteran.

(c) *Undernutrition:* ''Undernutrition'' means a deficiency resulting from insufficient intake of one or multiple essential nutrients, or the inability of the body to absorb, utilize, or retain such nutrients. Undernutrition is characterized by failure of the body to maintain normal organ functions and healthy tissues. Signs and symptoms may include: Loss of subcutaneous tissue, edema, peripheral neuropathy, muscle wasting, weakness, abdominal distention, ascites, and Body Mass Index below normal range.

(d) *Nutritional support:* The following describe various nutritional support methods used to treat certain digestive conditions.

(1) Total parenteral nutrition or hyperalimentation is a special liquid mixture given into the blood through an intravenous catheter. The mixture contains proteins, carbohydrates (sugars), fats, vitamins, and minerals. Total parenteral nutrition bypasses the normal digestion in the stomach and bowel.

(2) Assisted enteral nutrition requires a special liquid mixture (containing proteins, carbohydrates (sugar), fats, vitamins and minerals) to be delivered into the stomach or bowel through a flexible feeding tube. Percutaneous endoscopic gastrostomy is a type of assisted enteral nutrition in which a flexible feeding tube is inserted through the abdominal wall and into the stomach. Nasogastric or nasoenteral feeding tube is a type of assisted parental nutrition in which a flexible feeding tube is inserted through the nose into the stomach or bowel.

■ 5. Amend § 4.114 by:

■ a. Revising the introductory text;

■ b. Revising the entries for diagnostic codes 7200 through 7205;

■ c. Adding in numerical order diagnostic codes 7206 and 7207;

■ d. Revising the entry for diagnostic code 7301;

■ e. Adding in numerical order an entry for diagnostic code 7303;

■ f. Revising the entry for diagnostic code 7304;

■ g. Removing diagnostic codes 7305 and 7306;

■ h. Revising the entries for diagnostic codes 7307 through 7310, 7312, 7314, and 7315;

■ i. Removing diagnostic code 7316;

■ j. Revising the entries for diagnostic codes 7317 through 7319;

■ k. Removing diagnostic codes 7321 and 7322;

■ l. Revising the entry for diagnostic code 7323;

■ m. Removing diagnostic code 7324;

■ n. Revising the entries for diagnostic codes 7325 through 7330, and 7332 through 7338;

■ o. Removing diagnostic codes 7339 and 7340;

■ p. Revising diagnostic codes 7344 through 7348;

■ q. Adding in numerical order an entry for diagnostic code 7350;

■ r. Revising the entry for diagnostic code 7351;

■ s. Adding in numerical order an entry for diagnostic code 7352;

■ t. Revising the entry for diagnostic code 7354;

■ u. Adding in numerical order entries for diagnostic codes 7355 through 7357.

The revisions and additions read as follows:

§ 4.114 Schedule of ratings—digestive system.

Do not combine ratings under diagnostic codes 7301 to 7329 inclusive, 7331, 7342, 7345 to 7350 inclusive, 7352, and 7355 to 7357 inclusive, with each other. Instead, assign a single evaluation under the diagnostic code that reflects the predominant disability picture, elevating it to the next higher evaluation as warranted by the severity of the overall disability.

	Rating
7200 Soft tissue injury of the mouth, other than tongue or lips:	
Rate as for disfigurement (diagnostic codes 7800 and 7804) and impairment of mastication.	
7201 Lips, injuries of:	
Rate as disfigurement (diagnostic codes 7800 and 7804).	
7202 Tongue, loss of whole or part:	
Absent oral nutritional intake	100
Intact oral nutritional intake with permanently impaired swallowing function that requires prescribed dietary modification	60
Intact oral nutritional intake with permanently impaired swallowing function without prescribed dietary modification	30
Note (1): Review for entitlement to special monthly compensation under § 3.350 of this chapter.	
Note (2): Dietary modifications due to this condition must be prescribed by a medical provider.	
7203 Esophagus, stricture of:	
Documented history of recurrent or refractory esophageal stricture(s) causing dysphagia with at least one of the symptoms present: (1) Aspiration, (2) undernutrition, and/or (3) substantial weight loss as defined by § 4.112(a) and treatment with either surgical correction or percutaneous esophago-gastrointestinal tube (PEG tube)	80
Documented history of recurrent or refractory esophageal stricture(s) causing dysphagia which requires at least one of the following (1) dilation 3 or more times per year, (2) dilation using steroids at least one time per year, or (3) esophageal stent placement	50
Documented history of recurrent or refractory esophageal stricture(s) causing dysphagia which requires dilatation no more than 2 times per year	30
Documented history of esophageal stricture(s) that requires daily medications to control dysphagia otherwise asymptomatic	10
Documented history without daily symptoms or requirement for daily medications	0
Note (1): Findings must be documented by barium swallow, computerized tomography, or esophagogastroduodenoscopy.	
Note (2): Non-gastrointestinal complications of procedures should be rated under the appropriate system.	
Note (3): This diagnostic code applies, but is not limited to, esophagitis, mechanical or chemical; Mallory Weiss syndrome (bleeding at junction of esophagus and stomach due to tears) due to caustic ingestion of alkali or acid; drug-induced or infectious esophagitis due to Candida, virus, or other organism; idiopathic eosinophilic, or lymphocytic esophagitis; esophagitis due to radiation therapy; esophagitis due to peptic stricture; and any esophageal condition that requires treatment with sclerotherapy.	
Note (4): Recurrent esophageal stricture is defined as the inability to maintain target esophageal diameter beyond 4 weeks after the target diameter has been achieved.	
Note (5): Refractory esophageal stricture is defined as the inability to achieve target esophageal diameter despite receiving no fewer than 5 dilation sessions performed at 2-week intervals.	
7204 Esophageal motility disorder:	
Rate as esophagus, stricture of (DC 7203).	
Note: This diagnostic code applies, but is not limited to, achalasia (cardiospasm), diffuse esophageal spasm (DES), corkscrew esophagus, nutcracker esophagus, and other motor disorders of the esophagus; esophageal rings (including Schatzki rings), mucosal webs or folds, and impairment of the esophagus caused by systemic conditions such as myasthenia gravis, scleroderma, and other neurologic conditions..	
7205 Esophagus, diverticulum of, acquired:	
Rate as esophagus, stricture of (DC 7203).	
Note: This diagnostic code, applies, but is not limited to, pharyngo- esophageal (Zenker's) diverticulum, mid-esophageal diverticulum, and epiphrenic (distal esophagus) diverticulum.	
7206 Gastroesophageal reflux disease:	
Rate as esophagus, stricture of (DC 7203).	
7207 Barrett's esophagus:	
With esophageal stricture: Rate as esophagus, stricture of (DC 7203).	
Without esophageal stricture:	
Documented by pathologic diagnosis with high-grade dysplasia	30
Documented by pathologic diagnosis with low-grade dysplasia	10
Note (1): If malignancy develops, rate as malignant neoplasms of the digestive system, exclusive of skin growths (DC 7343).	
Note (2): If the condition is resolved via surgery, radiofrequency ablation, or other treatment, rate residuals as esophagus, stricture of (DC 7203).	
7301 Peritoneum, adhesions of, due to surgery, trauma, disease, or infection:	
Persistent partial bowel obstruction that is either inoperable and refractory to treatment, or requires total parenteral nutrition (TPN) for obstructive symptoms	80
Symptomatic peritoneal adhesions, persisting or recurring after surgery, trauma, inflammatory disease process such as chronic cholecystitis or Crohn's disease, or infection, as determined by a healthcare provider; and clinical evidence of recurrent obstruction requiring hospitalization at least once a year; and medically-directed dietary modification other than total parenteral nutrition; and at least one of the following: (1) Abdominal pain, (2) nausea, (3) vomiting, (4) colic, (5) constipation, or (6) diarrhea	50
Symptomatic peritoneal adhesions, persisting or recurring after surgery, trauma, inflammatory disease process such as chronic cholecystitis or Crohn's disease, or infection, as determined by a healthcare provider; and medically-directed dietary modification other than total parenteral nutrition; and at least one of the following: (1) Abdominal pain, (2) nausea, (3) vomiting, (4) colic, (5) constipation, or (6) diarrhea	30

	Rating
Symptomatic peritoneal adhesions, persisting or recurring after surgery, trauma, inflammatory disease process such as chronic cholecystitis or Crohn's disease, or infection, as determined by a healthcare provider, and at least one of the following: (1) Abdominal pain, (2) nausea, (3) vomiting, (4) colic, (5) constipation, or (6) diarrhea	10
History of peritoneal adhesions, currently asymptomatic	0
7303 Chronic complications of upper gastrointestinal surgery:	
Requiring continuous total parenteral nutrition (TPN) or tube feeding for a period longer than 30 consecutive days in the last six months	80
Any one of the following symptoms with or without pain: (1) Daily vomiting not controlled by oral dietary modification or medication; (2) six or more watery bowel movements per day every day, or explosive bowel movements that are difficult to predict or control; (3) post-prandial (meal-induced) light-headedness (syncope) with sweating and the need for medications to specifically treat complications of upper gastrointestinal surgery such as dumping syndrome or delayed gastric emptying	50
With two or more of the following symptoms: (1) Vomiting two or more times per week or vomiting not controlled by medical treatment; (2) discomfort or pain within an hour of eating and requiring ongoing oral dietary modification; (3) three to five watery bowel movements per day every day	30
With either nausea or vomiting managed by ongoing medical treatment	10
Post-operative status, asymptomatic	0
Note (1): For resection of small intestine, use DC 7328.	
Note (2): If pancreatic surgery results in a vitamin or mineral deficiency (*e.g.,* B12, iron, calcium, or fat-soluble vitamins), evaluate under the appropriate vitamin/mineral deficiency code and assign the higher rating. For example, evaluate Vitamin A, B, C or D deficiencies under DC 6313; ocular manifestations of vitamin deficiencies, such as night blindness, under DC 6313; keratitis or keratomalacia due to Vitamin A deficiency under DC 6001; Vitamin E deficiency under neuropathy; and Vitamin K deficiency under prolonged clotting (*e.g.,* DC 7705).	
Note (3): This diagnostic code includes operations performed on the esophagus, stomach, pancreas, and small intestine, including bariatric surgery.	
7304 Peptic ulcer disease:	
Post-operative for perforation or hemorrhage, for three months	100
Continuous abdominal pain with intermittent vomiting, recurrent hematemesis (vomiting blood) or melena (tarry stools); and manifestations of anemia which require hospitalization at least once in the past 12 months	60
Episodes of abdominal pain, nausea, or vomiting, that: Last for at least three consecutive days in duration; occur four or more times in the past 12 months; and are managed by daily prescribed medication	40
Episodes of abdominal pain, nausea, or vomiting, that: Last for at least three consecutive days in duration; occur three times or less in the past 12 months; and are managed by daily prescribed medication	20
History of peptic ulcer disease documented by endoscopy or X-ray	0
Note: After three months at the 100-percent evaluation, rate on residuals as determined by mandatory VA medical examination.	
7307 Gastritis, chronic:	
Rate as peptic ulcer disease (DC 7304).	
Note: This diagnostic code includes Helicobacter pylori infection, drug-induced gastritis, Zollinger-Ellison syndrome, and portal-hypertensive gastropathy with varix-related complications.	
7308 Postgastrectomy syndrome:	
Rate residuals as chronic complications of upper gastrointestinal surgery (DC 7303).	
7309 Stomach, stenosis of:	
Rate as chronic complications of upper gastrointestinal surgery (DC 7303) or peptic ulcer disease (DC 7304), depending on the predominant disability.	
7310 Stomach, injury of, residuals:	
Pre-operative: Rate as adhesions of peritoneum due to surgery, trauma, disease, or infection (DC 7301). No adhesions are necessary when evaluating under DC 7301.	
Post-operative: Rate as chronic complications of upper gastrointestinal surgery (DC 7303).	
* * * * * *	
7312 Cirrhosis of the liver:	
Liver disease with Model for End-Stage Liver Disease score greater than or equal to 15; or with continuous daily debilitating symptoms, generalized weakness and at least one of the following: (1) Ascites (fluid in the abdomen), or (2) a history of spontaneous bacterial peritonitis, or (3) encephalopathy, or (4) variceal hemorrhage, or (5) coagulopathy, or (6) portal gastropathy, or (7) hepatopulmonary or hepatorenal syndrome	100
Liver disease with Model for End-Stage Liver Disease score greater than 11 but less than 15; or with daily fatigue and at least one episode in the last year of either (1) variceal hemorrhage, or (2) portal gastropathy or hepatic encephalopathy	60
Liver disease with Model for End-Stage Liver Disease score of 10 or 11; or with signs of portal hypertension such as splenomegaly or ascites (fluid in the abdomen) and either weakness, anorexia, abdominal pain, or malaise	30
Liver disease with Model for End-Stage Liver Disease score greater than 6 but less than 10; or with evidence of either anorexia, weakness, abdominal pain or malaise	10
Asymptomatic, but with a history of liver disease	0
Note (1): Rate hepatocellular carcinoma occurring with cirrhosis under DC 7343 (Malignant neoplasms of the digestive system, exclusive of skin growths) in lieu of DC 7312.	
Note (2): Biochemical studies, imaging studies, or biopsy must confirm liver dysfunction (including hyponatremia, thrombocytopenia, and/or coagulopathy).	
Note (3): Rate condition based on symptomatology where the evidence does not contain a Model for End-Stage Liver Disease score.	
7314 Chronic biliary tract disease:	
With three or more clinically documented attacks of right upper quadrant pain with nausea and vomiting during the past 12 months; or requiring dilatation of biliary tract strictures at least once during the past 12 months	30
With one or two clinically documented attacks of right upper quadrant pain with nausea and vomiting in the past 12 months	10

	Rating
Asymptomatic, without history of a clinically documented attack of right upper quadrant pain with nausea and vomiting in the past 12 months	0
Note: This diagnostic code includes cholangitis, biliary strictures, Sphincter of Oddi dysfunction, bile duct injury, and choledochal cyst. Rate primary sclerosing cholangitis under chronic liver disease without cirrhosis (DC 7345).	
7315 Cholelithiasis, chronic:	
Rate as chronic biliary tract disease (DC 7314).	
7317 Gallbladder, injury of:	
Rate as adhesions of the peritoneum due to surgery, trauma, disease, or infection (DC 7301); or chronic gallbladder and biliary tract disease (DC 7314), or cholecystectomy (gallbladder removal), complications of (such as strictures and biliary leaks) (DC 7318), depending on the predominant disability.	
Note: No adhesions are necessary when evaluating gallbladder injuries under DC 7301.	
7318 Cholecystectomy (gallbladder removal), complications of (such as strictures and biliary leaks):	
With recurrent abdominal pain (post-prandial or nocturnal) ; and chronic diarrhea characterized by three or more watery bowel movements per day	30
With intermittent abdominal pain; and diarrhea characterized by one to two watery bowel movements per day	10
Asymptomatic	0
7319 Irritable bowel syndrome (IBS):	
Abdominal pain related to defecation at least one day per week during the previous three months; and two or more of the following: (1) Change in stool frequency, (2) change in stool form , (3) altered stool passage (straining and/or urgency), (4) mucorrhea, (5) abdominal bloating, or (6) subjective distension	30
Abdominal pain related to defecation for at least three days per month during the previous three months; and two or more of the following: (1) Change in stool frequency, (2) change in stool form, (3) altered stool passage (straining and/or urgency), (4) mucorrhea, (5) abdominal bloating, or (6) subjective distension	20
Abdominal pain related to defecation at least once during the previous three months; and two or more of the following: (1) Change in stool frequency, (2) change in stool form, (3) altered stool passage (straining and/or urgency), (4) mucorrhea, (5) abdominal bloating, or (6) subjective distention	10
Note (1): This diagnostic code may include functional digestive disorders (see 38 CFR § 3.317), such as dyspepsia, functional bloating and constipation, and diarrhea. Evaluate other symptoms of a functional digestive disorder not encompassed by this diagnostic code under the appropriate diagnostic code, to include gastrointestinal dysmotility syndrome (DC 7356), following the general principles of §§ 4.14 and 4.114.	
7323 Colitis, ulcerative:	
Rate as Crohn's disease or undifferentiated form of inflammatory bowel disease (DC 7326).	
7325 Enteritis, chronic:	
Rate as Irritable Bowel Syndrome (DC 7319) or Crohn's disease or undifferentiated form of inflammatory bowel disease (DC 7326), depending on the predominant disability.	
7326 Crohn's disease or undifferentiated form of inflammatory bowel disease:	
Severe inflammatory bowel disease that is unresponsive to treatment; and requires hospitalization at least once per year; and results in either an inability to work or is characterized by recurrent abdominal pain associated with at least two of the following: (1) Six or more episodes per day of diarrhea, (2) six or more episodes per day of rectal bleeding, (3) recurrent episodes of rectal incontinence, or (4) recurrent abdominal distention	100
Moderate inflammatory bowel disease that is managed on an outpatient basis with immunosuppressants or other biologic agents; and is characterized by recurrent abdominal pain, four to five daily episodes of diarrhea; and intermittent signs of toxicity such as fever, tachycardia, or anemia	60
Mild to moderate inflammatory bowel disease that is managed with oral and topical agents (other than immunosuppressants or other biologic agents); and is characterized by recurrent abdominal pain with three or less daily episodes of diarrhea and minimal signs of toxicity such as fever, tachycardia, or anemia	30
Minimal to mild symptomatic inflammatory bowel disease that is managed with oral or topical agents (other than immunosuppressants or other biologic agents); and is characterized by recurrent abdominal pain with three or less daily episodes of diarrhea and no signs of systemic toxicity	10
Note (1): Following colectomy/colostomy with persistent or recurrent symptoms, rate either under DC 7326 or DC 7329 (Intestine, large, resection of), whichever provides the highest rating.	
Note (2): VA requires diagnoses under DC 7326 to be confirmed by endoscopy or radiologic studies.	
Note (3): Inflammation may involve small bowel (ileitis), large bowel (colitis), or inflammation of any component of the gastrointestinal tract from the mouth to the anus.	
7327 Diverticulitis and diverticulosis:	
Diverticular disease requiring hospitalization for abdominal distress, fever, and leukocytosis (elevated white blood cells) one or more times in the past 12 months; and with at least one of the following complications: (1) Hemorrhage, (2) obstruction, (3) abscess, (4) peritonitis, or (5) perforation	30
Diverticular disease requiring hospitalization for abdominal distress, fever, and leukocytosis (elevated white blood cells) one or more times in the past 12 months; and without associated (1) hemorrhage, (2) obstruction, (3) abscess, (4) peritonitis, or (5) perforation	20
Asymptomatic; or a symptomatic diverticulitis or diverticulosis that is managed by diet and medication	0
Note: For colectomy or colostomy, use DC 7327 or DC 7329 (Intestine, large, resection of), whichever results in a higher evaluation.	
7328 Intestine, small, resection of:	
Status post intestinal resection with undernutrition and anemia; and requiring total parenteral nutrition (TPN)	80
Status post intestinal resection with undernutrition and anemia; and requiring prescribed oral dietary supplementation, continuous medication and intermittent total parental nutrition (TPN)	60
Status post intestinal resection with four or more episodes of diarrhea per day resulting in undernutrition and anemia; and requiring prescribed oral dietary supplementation and continuous medication	40
Status post intestinal resection with four or more episodes of diarrhea per day	20
Status post intestinal resection, asymptomatic	0

	Rating
Note: This diagnostic code includes short bowel syndrome, mesenteric ischemic thrombosis, and post-bariatric surgery complications. Where short bowel syndrome results in high-output syndrome, to include high-output stoma, consider assigning a higher evaluation under DC 7329 (Intestine, large, resection of).	
7329 Intestine, large, resection of:	
Total colectomy with formation of ileostomy, high-output syndrome, and more than two episodes of dehydration requiring intravenous hydration in the past 12 months	100
Total colectomy without high-output syndrome	60
Partial colectomy with permanent colostomy	40
Partial colectomy with reanastomosis (reconnection of the intestinal tube) with loss of ileocecal valve and recurrent episodes of diarrhea more than 3 times per day	20
Partial colectomy with reanastomosis (reconnection of the intestinal tube)	10
7330 Intestinal fistulous disease, external:	
Requiring total parenteral nutrition (TPN); or enteral nutrition along with at least one of the following: (1) Daily discharge equivalent to four or more ostomy bags, (2) requiring ten or more pad changes per day, or (3) both a Body Mass Index (BMI) less than 16 and persistent drainage (any amount) for more than 1 month during the past 12 months	100
Requiring enteral nutritional support along with at least one of the following: (1) Daily discharge equivalent to three or less ostomy bags (sized 130 cc), (2) requiring fewer than ten pad changes per day, or (3) a Body Mass Index (BMI) of 16 to 18 inclusive and persistent drainage (any amount) for more than 2 months in the past 12 months	60
Intermittent fecal discharge with persistent drainage for more than 3 months in the past 12 months	30
Note: This code applies to external fistulas that have developed as a consequence of abdominal trauma, surgery, radiation, malignancy, infection, or ischemia..	
* * * * * *	
7332 Rectum and anus, impairment of sphincter control:	
Complete loss of sphincter control characterized by incontinence or retention that is not responsive to a physician-prescribed bowel program and requires either surgery or digital stimulation, medication (beyond laxative use), and special diet; or incontinence to solids and/or liquids two or more times per day, which requires changing a pad two or more times per day	100
Complete or partial loss of sphincter control characterized by incontinence or retention that is partially responsive to a physician-prescribed bowel program and requires either surgery or digital stimulation, medication (beyond laxative use), and special diet; or incontinence to solids and/or liquids two or more times per week, which requires wearing a pad two or more times per week	60
Complete or partial loss of sphincter control characterized by incontinence or retention that is fully responsive to a physician-prescribed bowel program and requires digital stimulation, medication (beyond laxative use), and special diet; or incontinence to solids and/or liquids two or more times per month, which requires wearing a pad two or more times per month	30
Complete or partial loss of sphincter control characterized by incontinence or retention that is fully responsive to a physician-prescribed bowel program and requires medication or special diet; or incontinence to solids and/or liquids at least once every six months, which requires wearing a pad at least once every six months.	10
History of loss of sphincter control, currently asymptomatic	0
Note: Complete or partial loss of sphincter control refers to the inability to retain or expel stool at an appropriate time and place.	
7333 Rectum and anus, stricture of:	
Inability to open the anus with inability to expel solid feces	100
Reduction of the lumen 50 percent or more, with pain and straining during defecation	60
Reduction of the lumen by less than 50 percent, with straining during defecation	30
Luminal narrowing with or without straining, managed by dietary intervention	10
Note (1): Conditions rated under this code include dyssynergic defecation (levator ani) and anismus (functional constipation)	
Note (2): Evaluate an ostomy as Intestine, large, resection of (DC 7329).	
7334 Rectum, prolapse of:	
Persistent irreducible prolapse, repairable or unrepairable	100
Manually reducible prolapse that is not repairable and occurs at times other than bowel movements, exertion, or while performing the Valsalva maneuver	50
Manually reducible prolapse that is not repairable and occurs only after bowel movements, exertion, or while performing the Valsalva maneuver	30
Spontaneously reducible prolapse that is not repairable	10
Note (1): For repairable prolapse of the rectum, continue the 100-percent evaluation for two months following repair. Thereafter, determine the appropriate evaluation based on residuals by mandatory VA examination. Apply the provisions of § 3.105(e) of this chapter to any change in evaluation based upon that or any subsequent examination.	
Note (2): Where impairment of sphincter control constitutes the predominant disability, rate under diagnostic code 7332 (Rectum and anus, impairment of sphincter control).	
7335 Ano, fistula in, including anorectal fistula and anorectal abscess:	
More than two constant or near-constant fistulas with abscesses, drainage, and pain, which are refractory to medical and surgical treatment	60
One or two simultaneous fistulas, with abscess, drainage, and pain	40
Two or more simultaneous fistulas with drainage and pain, but without abscesses	20
One fistula with drainage and pain, but without abscess	10
7336 Hemorrhoids, external or internal:	
Internal or external hemorrhoids with persistent bleeding and anemia; or continuously prolapsed internal hemorrhoids with three or more episodes per year of thrombosis	20
Prolapsed internal hemorrhoids with two or less episodes per year of thrombosis; or external hemorrhoids with three or more episodes per year of thrombosis	10
7337 Pruritus ani (anal itching):	

	Rating
With bleeding or excoriation	10
Without bleeding or excoriation	0
7338 Hernia, including femoral, inguinal, umbilical, ventral, incisional, and other (but not including hiatal).	
Irreparable hernia (new or recurrent) present for 12 months or more; with both of the following present for 12 months or more:	
1. Size equal to 15 cm or greater in one dimension; and	
2. Pain when performing at least three of the following activities: (1) Bending over, (2) activities of daily living (ADLs), (3) walking, and (4) climbing stairs	100
Irreparable hernia (new or recurrent) present for 12 months or more; with both of the following present for 12 months or more:	
1. Size equal to 15 cm or greater in one dimension; and	
2. Pain when performing two of the following activities: (1) Bending over, (2) activities of daily living (ADLs), (3) walking, and (4) climbing stairs	60
Irreparable hernia (new or recurrent) present for 12 months or more; with both of the following present for 12 months or more:	
1. Size equal to 3 cm or greater but less than 15 cm in one dimension; and	
2. Pain when performing at least two of the following activities: (1) Bending over, (2) activities of daily living (ADLs), (3) walking, and (4) climbing stairs	30
Irreparable hernia (new or recurrent) present for 12 months or more; with both of the following present for 12 months or more:	
1. Size equal to 3 cm or greater but less than 15 cm in one dimension; and	
2. Pain when performing one of the following activities: (1) Bending over, (2) activities of daily living (ADLs), (3) walking, and (4) climbing stairs	20
Irreparable hernia (new or recurrent) present for 12 months or more; with hernia size smaller than 3 cm	10
Asymptomatic hernia; present and repairable, or repaired	0
Note (1): With two compensable inguinal hernias, evaluate the more severely disabling hernia first, and then add 10 percent to that rating to account for the second compensable hernia. Do not add 10 percent to that rating if the more severely disabling hernia is rated at 100-percent.	
Note (2): Any one of the following activities of daily living are sufficient for evaluation: Bathing, dressing, hygiene, and/or transfers.	
* * * * * *	
7344 Benign neoplasms, exclusive of skin growths:	
Evaluate under a diagnostic code appropriate to the predominant disability or the specific residuals after treatment.	
Note: This diagnostic code includes lipoma, leiomyoma, colon polyps, or villous adenoma.	
7345 Chronic liver disease without cirrhosis:	
Progressive chronic liver disease requiring use of both parenteral antiviral therapy (direct antiviral agents), and parenteral immunomodulatory therapy (interferon and other); and for six months following discontinuance of treatment	100
Progressive chronic liver disease requiring continuous medication and causing substantial weight loss and at least two of the following: (1) Daily fatigue, (2) malaise, (3) anorexia, (4) hepatomegaly, (5) pruritus, and (6) arthralgia	60
Progressive chronic liver disease requiring continuous medication and causing minor weight loss and at least two of the following: (1) Daily fatigue, (2) malaise, (3) anorexia, (4) hepatomegaly, (5) pruritus, and (6) arthralgia	40
Chronic liver disease with at least one of the following: (1) Intermittent fatigue, (2) malaise, (3) anorexia, (4) hepatomegaly, or (5) pruritus	20
Previous history of liver disease, currently asymptomatic	0
Note (1): 100-percent evaluation shall continue for six months following discontinuance of parenteral antiviral therapy and administration of parenteral immunomodulatory drugs. Six months after discontinuance of parenteral antiviral therapy and parenteral immunomodulatory drugs, determine the appropriate disability rating by mandatory VA exam. Apply the provisions of § 3.105(e) to any change in evaluation based upon that or any subsequent examination.	
Note (2): For individuals for whom physicians recommend both parenteral antiviral therapy and parenteral immunomodulatory drugs, but for whom treatment is medically contraindicated, rate according to DC 7312 (Cirrhosis of the liver).	
Note (3): This diagnostic code includes Hepatitis B (confirmed by serologic testing), primary biliary cirrhosis (PBC), primary sclerosing cholangitis (PSC), autoimmune liver disease, Wilson's disease, Alpha-1-antitrypsin deficiency, hemochromatosis, drug-induced hepatitis, and non-alcoholic steatohepatitis (NASH). Track Hepatitis C (or non-A, non-B hepatitis) under DC 7354 but evaluate it using the criteria above.	
Note (4): Evaluate sequelae, such as cirrhosis or malignancy of the liver, under an appropriate diagnostic code, but do not use the same signs and symptoms as the basis for evaluation under DC 7354 and under a diagnostic code for sequelae. (See § 4.14).	
7346 Hiatal hernia and paraesophageal hernia:	
Rate as esophagus, stricture of (DC 7203).	
7347 Pancreatitis, chronic:	
Daily episodes of abdominal or mid-back pain that require three or more hospitalizations per year; and pain management by a physician; and maldigestion and malabsorption requiring dietary restriction and pancreatic enzyme supplementation	100
Three or more episodes of abdominal or mid-back pain per year and at least one episode per year requiring hospitalization for management either of complications related to abdominal pain or complications of tube enteral feeding	60
At least one episode per year of abdominal or mid-back pain that requires ongoing outpatient medical treatment for pain, digestive problems, or management of related complications including but not limited to cyst, pseudocyst, intestinal obstruction, or ascites	30
Note (1): Appropriate diagnostic studies must confirm that abdominal pain in this condition results from pancreatitis.	
Note (2): Separately rate endocrine dysfunction resulting in diabetes due to pancreatic insufficiency under DC 7913 (Diabetes mellitus).	
7348 Vagotomy with pyloroplasty or gastroenterostomy:	
Following confirmation of postoperative complications of stricture or continuing gastric retention	40
With symptoms and confirmed diagnosis of alkaline gastritis, or with confirmed persisting diarrhea	30
With incomplete vagotomy	20

	Rating
Note: Rate recurrent ulcer following complete vagotomy under DC 7304 (Peptic ulcer disease), with a minimum rating of 20 percent; and rate post-operative residuals not addressed by this diagnostic code under DC 7303 (Chronic complications of upper gastrointestinal surgery).	
7350 Liver abscess:	
Assign a rating of 100 percent for 6 months from the date of initial diagnosis. Six months following initial diagnosis, determine the appropriate disability rating by mandatory VA examination. Thereafter, rate the condition based on chronic residuals under the appropriate body system. Apply the provisions of § 3.105(e) to any reduction in evaluation.	
Note: This diagnostic code includes abscesses caused by bacterial, viral, amebic (*e.g.,* E. hystolytica), fungal (*e.g.,* C. albicans), and other agents.	
7351 Liver transplant:	
For an indefinite period from the date of hospital admission for transplant surgery	100
Awaiting retransplantation, minimum rating	60
Minimum rating	30
Note: Assign a rating of 100 percent as of the date of hospital admission for transplant surgery. One year following discharge, determine the appropriate disability rating by mandatory VA examination. Apply the provisions of § 3.105(e) of this chapter to any change in evaluation based upon that or any subsequent examination. Rate residuals of any recurrent underlying liver disease under the appropriate diagnostic code and, when appropriate, combine with other post-transplant residuals under the appropriate body system(s), subject to the provisions of §§ 4.14 and 4.114.	
7352 Pancreas transplant:	
For an indefinite period from the date of hospital admission for transplant surgery	100
Minimum rating	30
Note: Assign a rating of 100 percent as of the date of hospital admission for transplant surgery. One year following discharge, determine the appropriate disability rating by mandatory VA examination. Apply the provisions of § 3.105(e) of this chapter to any change in evaluation based upon that or any subsequent examination.	
7354 Hepatitis C (or non-A, non-B hepatitis):	
Rate under DC 7345 (Chronic liver disease without cirrhosis).	
7355 Celiac disease:	
Malabsorption syndrome that causes weakness which interferes with activities of daily living; and weight loss resulting in wasting and nutritional deficiencies; and with systemic manifestations including but not limited to, weakness and fatigue, dermatitis, lymph node enlargement, hypocalcemia, low vitamin levels; and anemia related to malabsorption; and episodes of abdominal pain and diarrhea due to lactase deficiency or pancreatic insufficiency	80
Malabsorption syndrome that causes chronic diarrhea managed by medically-prescribed dietary intervention such as prescribed gluten-free diet, with nutritional deficiencies due to lactase and pancreatic insufficiency; and with systemic manifestations including, but not limited to, weakness and fatigue, dermatitis, lymph node enlargement, hypocalcemia, low vitamin levels, or atrophy of the inner intestinal lining shown on biopsy	50
Malabsorption syndrome with chronic diarrhea managed by medically-prescribed dietary intervention such as prescribed gluten-free diet; and without nutritional deficiencies	30
Note (1): An appropriate serum antibody test or endoscopy with biopsy must confirm the diagnosis.	
Note (2): For evaluation of celiac disease with the predominant disability of malabsorption, use the greater evaluation between DC 7328 or celiac disease under DC 7355.	
7356 Gastrointestinal dysmotility syndrome:	
Requiring complete dependence on total parenteral nutrition (TPN) or continuous tube feeding for nutritional support	80
Requiring intermittent tube feeding for nutritional support; with recurrent emergency treatment for episodes of intestinal obstruction or regurgitation due to poor gastric emptying, abdominal pain, recurrent nausea, or recurrent vomiting	50
With symptoms of intestinal pseudo-obstruction (CIPO); and symptoms of intestinal motility disorder, including but not limited to, abdominal pain, bloating, feeling of epigastric fullness, dyspepsia, nausea and vomiting, regurgitation, constipation, and diarrhea, managed by ambulatory care; and requiring prescribed dietary management or manipulation	30
Intermittent abdominal pain with epigastric fullness associated with bloating; and without evidence of a structural gastrointestinal disease	10
Note: Use this diagnostic code for illnesses associated with 38 CFR 3.317(a)(2)(i)(B)(3), other than those which can be evaluated under DC 7319.	
7357 Post pancreatectomy syndrome:	
Following total or partial pancreatectomy, evaluate under Pancreatitis, chronic (DC 7347), Chronic complications of upper gastrointestinal surgery (DC 7303), or based on residuals such as malabsorption (Intestine, small, resection of, DC 7328), diarrhea (Irritable bowel syndrome, DC 7319, or Crohn's disease or undifferentiated form of inflammatory bowel disease, DC 7326), or diabetes (DC 7913), whichever provides the highest evaluation. Minimum	30

■ 6. Amend appendix A to part 4 by:

■ a. Adding entries for §§ 4.110, 4.111 and 4.112;

■ b. In the entry for § 4.114:

■ i. Adding in numerical order entries for diagnostic codes 7200 through 7207 and 7301 through 7303;

■ ii. Revising the entries for diagnostic codes 7304 through 7305;

■ iii. Adding in numerical order entries for diagnostic codes 7306 and 7307;

■ iv. Revising the entry for diagnostic code 7308;

■ v. Adding in numerical order entries for diagnostic codes 7309 and 7310;

■ vi. Revising the entry for diagnostic code 7312;

■ vii. Adding in numerical order entries for diagnostic codes 7314 through 7318;

■ viii. Revising the entries for diagnostic codes 7319 and 7321;

■ ix. Adding in numerical order entries for diagnostic codes 7322 through 7327;

■ x. Revising the entries for diagnostic codes 7328 through 7330 and 7332;

■ xi. Adding in numerical order an entry for diagnostic code 7333;

■ xii. Revising the entry for diagnostic codes 7334;

■ xiii. Adding in numerical order entries for diagnostic codes 7335 through 7338;

■ xiv. Revising the entry for diagnostic code 7339;

■ xv. Adding in numerical order an entry for diagnostic code 7340;

■ xvi. Revising the entries for diagnostic codes 7344 through 7348;

■ xvii. Adding in numerical order an entry for diagnostic code 7350;

■ xviii. Revising the entry for diagnostic code 7351;

■ xix. Adding in numerical order an entry for diagnostic code 7352;

■ xx. Revising the entry for diagnostic code 7354; and

■ xxi. Adding in numerical order entries for diagnostic codes 7355 through 7357;

The revisions and additions read as follows:

Appendix A to Part 4—Table of Amendments and Effective Dates Since 1946

Sec.	Diagnostic code No.	
*	*	* * * * *
4.110		Removed and reserved [*Effective date of final rule*].
4.111		Removed and reserved [*Effective date of final rule*].
4.112		Revised [*Effective date of final rule*].
*	*	* * * * *
4.114		Introduction paragraph revised March 10, 1976; introduction paragraph revised [*Effective date of final rule*].
	7200	Title, criterion [*Effective date of final rule*].
	7201	Criterion [*Effective date of final rule*].
	7202	Evaluation, criterion, note [*Effective date of final rule*].
	7203	Evaluation, criterion, note [*Effective date of final rule*].
	7204	Title, note [*Effective date of final rule*].
	7205	Note [*Effective date of final rule*].
	7206	Added [*Effective date of final rule*].
	7207	Added [*Effective date of final rule*].
	7301	Title, Evaluation, criterion, note [*Effective date of final rule*].
	7302	Removed April 8, 1959.
	7303	Added [*Effective date of final rule*].
	7304	Evaluation November 1, 1962; title, evaluation, criterion, and note [*Effective date of final rule*].
	7305	Evaluation November 1, 1962; Removed [*Effective date of final rule*].
	7306	Criterion April 8, 1959; Removed [*Effective date of final rule*].
	7307	Evaluation May 22, 1964; Criterion May 22, 1964; Note May 22, 1964; title, evaluation, criterion, and note [*Effective date of final rule*].
	7308	Title April 8, 1959; evaluation April 8, 1959; evaluation and criterion [*Effective date of final rule*].
	7309	Evaluation [*Effective date of final rule*].
	7310	Evaluation [*Effective date of final rule*].
*	*	* * * * *
	7312	Evaluation March 10, 1976; evaluation July 2, 2001; title, evaluation, criterion, and note [*Effective date of final rule*].
	7314	Title, evaluation, note [*Effective date of final rule*].
	7315	Evaluation [*Effective date of final rule*].
	7316	Removed [*Effective date of final rule*].
	7317	Note [*Effective date of final rule*].
	7318	Title, evaluation, and criterion [*Effective date of final rule*].
	7319	Title November 1, 1962; evaluation November 1, 1962; title, evaluation, criterion, and note [*Effective date of final rule*].
	7321	Evaluation July 6, 1950; criterion March 10, 1976; Removed [*Effective date of final rule*].
	7322	Removed [*Effective date of final rule*].
	7323	Criterion and note [*Effective date of final rule*].
	7324	Removed [*Effective date of final rule*].
	7325	Note November 1, 1962; note [*Effective date of final rule*].
	7326	Note November 1, 1962; title, evaluation, criterion and note [*Effective date of final rule*].
	7327	Evaluation November 1, 1962; criterion November 1, 1962; note November 1, 1962; title, evaluation, criterion, and note [*Effective date of final rule*].
	7328	Evaluation November 1, 1962; title, evaluation, criterion, and note [*Effective date of final rule*].
	7329	Evaluation November 1, 1962; evaluation, criterion, and note [*Effective date of final rule*].
	7330	Evaluation November 1, 1962; criterion and note [*Effective date of final rule*].
*	*	* * * * *
	7332	Evaluation November 1, 1962; evaluation, criterion, and note [*Effective date of final rule*].
	7333	Evaluation, criterion, and note [*Effective date of final rule*].
	7334	Evaluation July 6, 1950; evaluation November 1, 1962; evaluation, criterion, and note [*Effective date of final rule*].
	7335	Evaluation and criterion [*Effective date of final rule*].
	7336	Criterion November 1, 1962; criterion [*Effective date of final rule*].
	7337	Title, evaluation, and criterion [*Effective date of final rule*].
	7338	Title, evaluation, criterion, and note [*Effective date of final rule*].
	7339	Criterion March 10, 1976; removed [*Effective date of final rule*].
	7340	Removed [*Effective date of final rule*].
*	*	* * * * *
	7344	Criterion July 2, 2001; note [*Effective date of final rule*].
	7345	Evaluation August 23, 1948; evaluation February 17, 1955; evaluation July 2, 2001; title [*Effective date of final rule*]; evaluation, criterion, and note [*Effective date of final rule*].

Sec.	Diagnostic code No.	
	7346	Evaluation February 1, 1962; title [*Effective date of final rule*]; evaluation, criterion, and note [*Effective date of final rule*].
	7347	Added September 9, 1975; title [*Effective date of final rule*]; evaluation, criterion, and note [*Effective date of final rule*].
	7348	Added March 10, 1976; criterion and note [*Effective date of final rule*].
	7350	Added [*Effective date of final rule*].
	7351	Added July 2, 2001; evaluation, criterion, and note [*Effective date of final rule*].
	7352	Added [*Effective date of final rule*].
	7354	Added July 2, 2001; evaluation, criterion, and note [*Effective date of final rule*].
	7355	Added [*Effective date of final rule*].
	7356	Added [*Effective date of final rule*].
	7357	Added [*Effective date of final rule*].
*	*	* * * * *

■ 7. Amend appendix B to part 4 in the table under ''The Digestive System'' by:

■ a. Revising the entries for diagnostic codes 7200, 7202, and 7204;

■ b. Adding in numerical order entries for diagnostic codes 7206 and 7207;

■ c. Revising the entry for diagnostic code 7301;

■ d. Adding in numerical order an entry for diagnostic code 7303;

■ e. Revising the entries for diagnostic codes 7304 through 7307, 7312, 7314, 7316 through 7319, 7321, 7322, 7324, 7326 through 7328, 7330, 7332, 7335 through 7340, and 7344 through 7348;

■ f. Adding in numerical order entries for diagnostic codes 7350 and 7352;

■ g. Revising the entry for diagnostic code 7354; and

■ h. Adding in numerical order entries for diagnostic codes 7355 through 7357.

The revisions and additions read as follows:

Appendix B to Part 4—Numerical Index of Disabilities

Diagnostic code No.	
* * * * * * *	
THE DIGESTIVE SYSTEM	
7200	Soft tissue injury of the mouth, other than tongue or lips.
* * * * * * *	
7202	Tongue, loss of whole or part.
* * * * * * *	
7204	Esophageal motility disorder.
* * * * * * *	
7206	Gastroesophageal reflux disease.
7207	Barrett's esophagus.
* * * * * * *	
7301	Peritoneum, adhesions of, due to surgery, trauma, or infection.
7303	Chronic complications of upper gastrointestinal surgery.
7304	Peptic ulcer disease.
7305	Removed.
7306	Removed.
7307	Gastritis, chronic.
* * * * * * *	
7312	Cirrhosis of the liver.
7314	Chronic biliary tract disease.
* * * * * * *	
7316	Removed.
7317	Gallbladder, injury of.
7318	Cholecystectomy (gallbladder removal), complications of (such as strictures and biliary leaks).
7319	Irritable bowel syndrome (IBS).
* * * * * * *	
7321	Removed.
7322	Removed.
* * * * * * *	
7324	Removed.
* * * * * * *	
7326	Crohn's disease or undifferentiated form of inflammatory bowel disease.

Diagnostic code No.	
7327	Diverticulitis and diverticulosis.
7328	Intestine, small, resection of.
* * * * * * *	
7330	Intestinal fistulous diseases, external.
* * * * * * *	
7332	Rectum and anus, impairment of sphincter control.
* * * * * * *	
7335	Ano, fistula in, including anorectal fistula, anorectal abscess.
7336	Hemorrhoids, external or internal.
7337	Pruritus ani (anal itching).
7338	Hernia, including femoral, inguinal, umbilical, ventral, incisional, and other (but not including hiatal).
7339	Removed.
7340	Removed.
* * * * * * *	
7344	Benign neoplasms, exclusive of skin growths.
7345	Chronic liver disease without cirrhosis.
7346	Hiatal hernia and paraesophageal hernia.
7347	Pancreatitis, chronic.
7348	Vagotomy with pyloroplasty or gastroenterostomy.
7350	Liver abscess.
* * * * * * *	
7352	Pancreas transplant.
7354	Hepatitis C (or non-A, non-B hepatitis).
7355	Celiac disease.
7356	Gastrointestinal dysmotility syndrome.
7357	Post pancreatectomy syndrome.
* * * * * * *	

■ 8. Amend appendix C to part 4 by:

■ a. Adding in alphabetical order under the entry for ''Abscess'', entries for ''Anorectal'' and ''Liver'';

■ b. Revising the entry for ''Cholangitis, chronic'';

■ c. Adding in alphabetical order an entry for ''Cholecystectomy (gallbladder removal), complications of (such as strictures and biliary leaks)'';

■ d. Adding in alphabetical order under the entry for ''Disease'', entries for ''Celiac'', ''Crohn's'', ''Gallbladder and biliary tract, chronic'', and ''Inflammatory bowel'';

■ e. Removing the entry for ''Diverticulitis'' and adding in its place an entry for ''Diverticulitis and diverticulosis'';

■ f. Adding in alphabetical order under the entry for ''Esophagus'', entries for ''Barrett's'' and ''Motility disorder'';

■ g. Removing the entry for ''Gastritis, hypertrophic'' and adding in its place an entry for ''Gastritis, chronic'';

■ h. Adding, in alphabetical order, an entry for ''Gastroesophageal reflux disease'';

■ i. Removing, under the entry for ''Hernia'', entries for ''Femoral,'' and ''Hiatal'' and adding in their place entries for ''Femoral, inguinal, umbilical, ventral, incisional, and other'' and ''Hiatal and parasophageal'', respectively;

■ j. Removing, under the entry for ''Hernia'', entries for ''Inguinal'' and ''Ventral'';

■ k. Removing, under the entry for ''Injury'', the entries for ''Gall bladder'' and ''Mouth'' and adding in their place entries for ''Gallbladder'' and ''Mouth, soft tissue'', respectively;

■ l. Removing the entry for ''Intestine, fistula of'' and adding in its place an entry for ''Intestine:'';

■ m. Adding in alphabetical order under the entry for ''Intestine'', entries for ''Fistulous disease, external'', ''Large, resection of'', and ''Small, resection of'';

■ n. Removing the entry for ''Irritable colon syndrome'' and adding in its place an entry for ''Irritable bowel syndrome (IBS)'';

■ o. Removing the entry for ''Pancreatitis'' and adding in its place an entry for ''Pancreas:'';

■ p. Adding in alphabetical order under the entry for ''Pancreas'', entries for ''Chronic pancreatitis'', ''Post pancreatectomy syndrome'', ''Surgery, complications of'', and ''Transplant'';

■ q. Revising the entry for ''Pruritus ani'';

■ r. Removing the entry for ''Stomach, stenosis of'' and adding in its place an entry for ''Stomach:'';

■ s. Adding in alphabetical order under entry for ''Stomach'', entries for ''Postgastrectomy syndrome'', ''Stenosis of'', and ''Surgery, complications of'';

■ t. Adding in alphabetical order under the entry for ''Syndromes'', entries for ''Gastrointestinal dysmotility'', ''Postgastrectomy'', and ''Post pancreatectomy'';

■ u. Removing the entry for ''Ulcer'' and adding in its place an entry for ''Ulcer, peptic'';

■ v. Removing under the entry for ''Ulcer, peptic'' the entries for ''Duodenal'', ''Gastric'', and ''Marginal''.

The revisions and additions read as follows:

Appendix C to Part 4—Alphabetical Index of Disabilities

	Diagnostic Code No.
* * * * * * *	
Abscess:	
Anorectal	7335
* * * * * * *	
Liver	7350
* * * * * * *	
* * * * * * *	
Cholangitis, chronic	7314
Cholecystectomy (gallbladder removal) complications of (such as strictures and biliary leaks)	7318
* * * * * * *	
Disease:	
* * * * * * *	
Celiac	7355
* * * * * * *	
Crohn's	7326
Gallbladder and biliary tract, chronic	7314
* * * * * * *	
Inflammatory bowel	7326
* * * * * * *	
Diverticulitis and diverticulosis	7327
* * * * * * *	
Esophagus:	
Barrett's	7207
* * * * * * *	
Motility disorder	7204
* * * * * * *	
Gastritis, chronic	7307
Gastroesophageal reflux disease	7206
* * * * * * *	
Hernia:	
Femoral, inguinal, umbilical, ventral, incisional, and other	7338
Hiatal and parasophageal	7346
* * * * * * *	
Injury:	
* * * * * * *	
Gallbladder	7317
* * * * * * *	
Mouth, soft tissue	7200
* * * * * * *	
Intestine:	
Fistulous disease, external	7330
Large, resection of	7329
Small, resection of	7328
Irritable bowel syndrome (IBS)	7319
* * * * * * *	
Pancreas:	
Chronic pancreatitis	7347
Post pancreatectomy syndrome	7357
Surgery, complications of	7303
Transplant	7352
* * * * * * *	
Pruritus ani (anal itching)	7337
* * * * * * *	
Stomach:	

	Diagnostic Code No.
Postgastrectomy syndrome	7308
Stenosis of	7309
Surgery, complications of	7303
* * * * * * *	
Syndromes:	
* * * * * * *	
Gastrointestinal dysmotility	7356
* * * * * * *	
Postgastrectomy	7308
Post pancreatectomy	7357
* * * * * * *	
* * * * * * *	
Ulcer, peptic	7304
* * * * * * *	

[FR Doc. 2021–28314 Filed 1–10–22; 8:45 am]

BILLING CODE 8320–01–P

FEDERAL REGISTER

Vol. 87 Tuesday,

No. 7 January 11, 2022

Part IV

Department of Energy

10 CFR Parts 429, 430, and 431

Energy Conservation Program: Test Procedure for Consumer Water Heaters and Residential-Duty Commercial Water Heaters; Proposed Rule

DEPARTMENT OF ENERGY

10 CFR Parts 429, 430, and 431

[EERE–2019–BT–TP–0032]

RIN 1904–AE77

Energy Conservation Program: Test Procedure for Consumer Water Heaters and Residential-Duty Commercial Water Heaters

AGENCY: Office of Energy Efficiency and Renewable Energy, Department of Energy.

ACTION: Notice of proposed rulemaking and request for comment.

SUMMARY: The U.S. Department of Energy (DOE) proposes to amend the test procedure for consumer water heaters and residential-duty commercial water heaters to update the procedure to the latest versions of the industry standards that are incorporated by reference and to consider procedures that are included in a draft industry standard, which is not currently incorporated by reference. DOE also proposes to interpret the statutory definition of consumer water heater to cover larger capacity heat pump type units as commercial equipment and proposes several new definitions for water heaters that cannot be appropriately tested with the current DOE test procedure, along with test methods to test these products. DOE is seeking comment from interested parties on the proposals.

DATES:

Comments: DOE will accept comments, data, and information regarding this notice of proposed rulemaking (NOPR) on or before March 14, 2022. See section V, ''Public Participation,'' for details.

Meeting: DOE will hold a webinar on Tuesday, January 25, 2022, from 1:00 p.m. to 5:00 p.m. See section V, ''Public Participation,'' for webinar registration information, participant instructions, and information about the capabilities available to webinar participants.

ADDRESSES: Interested persons are encouraged to submit comments using the Federal eRulemaking Portal at *www.regulations.gov.* Follow the instructions for submitting comments. Alternatively, interested persons may submit comments, identified by docket number EERE–2019–BT–TP–0032, by any of the following methods:

1. *Federal eRulemaking Portal: www.regulations.gov.* Follow the instructions for submitting comments.

2. *Email to: WaterHeaters2019TP0032@ee.doe.gov.* Include the docket number EERE–2019–BT–TP–0032 in the subject line of the message.

No telefacsimilies (faxes) will be accepted. For detailed instructions on submitting comments and additional information on this process, see section V of this document.

Although DOE has routinely accepted public comment submissions through a variety of mechanisms, including postal mail and hand delivery/courier, the Department has found it necessary to make temporary modifications to the comment submission process in light of the ongoing COVID–19 pandemic. DOE is currently suspending receipt of public comments via postal mail and hand delivery/courier, and instead, the Department is only accepting electronic submissions at this time. If a commenter finds that this change poses an undue hardship, please contact Appliance Standards Program staff at (202) 586–1445 to discuss the need for alternative arrangements. Once the COVID–19 pandemic health emergency is resolved, DOE anticipates resuming all of its regular options for public comment submission, including postal mail and hand delivery/courier.

Docket: The docket, which includes **Federal Register** notices, public meeting attendee lists and transcripts (if a public meeting is held), comments, and other supporting documents/materials, is available for review at *www.regulations.gov.* All documents in the docket are listed in the *www.regulations.gov* index. However, some documents listed in the index, such as those containing information that is exempt from public disclosure, may not be publicly available.

The docket web page can be found at *www.regulations.gov/docket?D=EERE-2019-BT-TP-0032.* The docket web page contains instructions on how to access all documents, including public comments, in the docket. See section V for information on how to submit comments through *www.regulations.gov.*

FOR FURTHER INFORMATION CONTACT:

Ms. Julia Hegarty, U.S. Department of Energy, Office of Energy Efficiency and Renewable Energy, Building Technologies Office, EE–5B, 1000 Independence Avenue SW, Washington, DC 20585–0121. Telephone: (202) 597–6737. Email *ApplianceStandardsQuestions@ee.doe.gov.*

Ms. Kristin Koernig, U.S. Department of Energy, Office of the General Counsel, GC–33, 1000 Independence Avenue SW, Washington, DC 20585–0121. Telephone: (202) 586–3593. Email: *kristin.koernig@hq.doe.gov.*

For further information on how to submit a comment, review other public comments and the docket, or participate in a public meeting (if one is held), contact the Appliance and Equipment Standards Program staff at (202) 287–1445 or by email: *ApplianceStandardsQuestions@ee.doe.gov.*

SUPPLEMENTARY INFORMATION: DOE proposes to incorporate by reference the following industry standards into part 430:

American Society of Heating, Refrigerating, and Air-Conditioning Engineers (ASHRAE) Standard 41.1–2020, (ASHRAE 41.1–2020), ''Standard Methods for Temperature Measurement,'' approved June 30, 2020.

American National Standards Institute (ANSI)/ASHRAE Standard 41.6–2014, (ASHRAE 41.6–2014), ''Standard Method for Humidity Measurement,'' ANSI approved July 3, 2014.

Copies of ASHRAE 41.1–2020 and ASHRAE 41.6–2014 can be obtained from the American Society of Heating, Refrigerating, and Air-Conditioning Engineers, Inc., 1791 Tullie Circle NE, Atlanta, GA 30329, (800) 527–4723 or (404) 636–8400, or online at: *www.ashrae.org.*

American Society for Testing and Materials International (ASTM) Standard D2156–09 (Reapproved 2018) (ASTM D2156–09 (RA 2018)), ''Standard Test Method for Smoke Density in Flue Gases from Burning Distillate Fuels,'' reapproved October 1, 2018.

ASTM Standard E97–1987 (ASTM E97–1987 (W1991)), ''Standard Test Methods for Directional Reflectance Factor, 45-Deg 0-Deg, of Opaque Specimens by Broad-Band Filter Reflectometry,'' approved January 1987, withdrawn 1991.

Copies of ASTM D2156–09 (RA 2018) and ASTM E97–1987 (W1991) can be obtained from the American Society for Testing and Materials International, 100 Barr Harbor Drive, P.O. Box C700, West Conshohocken, PA 19428–2959 or online at: *www.astm.org.*

See section IV.M of this document for a further discussion of these industry standards.

Table of Contents

I. Authority and Background
A. Authority
B. Background
II. Synopsis of the Notice of Proposed Rulemaking
III. Discussion
A. Scope of Applicability
1. Definitions
B. Updates to Industry Standards

1. ASHRAE 41.1
2. ASHRAE 118.2
C. Test Procedure Requirements
1. Commercial Water Heater Draw Pattern
2. Terminology
3. Test Conditions
4. Mixing Valve
5. Mass Measurements
6. Very Small Draw Pattern Flow Rate
7. Low Temperature Water Heaters
8. Heat Pump Water Heater Heaters
9. Circulating Gas-Fired Water Heaters
10. Solar Water Heaters
11. Connected Water Heaters
12. Drain Down Test Method
13. Alternate Order 24-Hour Simulated-Use Test
14. Untested Provisions
D. Reporting
E. Test Procedure Costs and Harmonization
1. Test Procedure Costs and Impact
2. Harmonization With Industry Standards
F. Compliance Date and Waivers
IV. Procedural Issues and Regulatory Review
A. Review Under Executive Order 12866
B. Review Under the Regulatory Flexibility Act
1. Description of Reasons Why Action Is Being Considered
2. Objectives of, and Legal Basis for, Rule
3. Description and Estimate of Small Entities Regulated
4. Description and Estimate of Compliance Requirements
5. Duplication, Overlap, and Conflict With Other Rules and Regulations
6. Significant Alternatives to the Rule
C. Review Under the Paperwork Reduction Act of 1995
D. Review Under the National Environmental Policy Act of 1969
E. Review Under Executive Order 13132
F. Review Under Executive Order 12988
G. Review Under the Unfunded Mandates Reform Act of 1995
H. Review Under the Treasury and General Government Appropriations Act, 1999
I. Review Under Executive Order 12630
J. Review Under Treasury and General Government Appropriations Act, 2001
K. Review Under Executive Order 13211
L. Review Under Section 32 of the Federal Energy Administration Act of 1974
M. Description of Materials Incorporated by Reference
V. Public Participation
A. Participation in the Webinar
B. Submission of Comments
VI. Approval of the Office of the Secretary

I. Authority and Background

Consumer water heaters are included in the list of ''covered products'' for which DOE is authorized to establish and amend energy conservation standards and test procedures. (42 U.S.C. 6292(a)(4)) DOE's energy conservation standards and test procedure for consumer water heaters are currently prescribed at Title 10 of the Code of Federal Regulations (CFR), part 430, section 32(d), and 10 CFR part 430, subpart B, appendix E (appendix E). As discussed in this NOPR, residential-duty commercial water heaters, for which DOE is also authorized to establish and amend energy conservation standards and test procedures (42 U.S.C. 6311(1)(K)), must also be tested according to appendix E. 10 CFR 431.106(b)(1) (*See* 42 U.S.C. 6295(e)(5)(H)). DOE's energy conservation standards for residential-duty commercial water heaters are currently prescribed at 10 CFR 431.110(b)(1). The following sections discuss DOE's authority to establish and amend test procedures for consumer water heaters and residential-duty commercial water heaters, as well as relevant background information regarding DOE's consideration of test procedures for these products and equipment.

A. Authority

The Energy Policy and Conservation Act, as amended (EPCA),[1] authorizes DOE to regulate the energy efficiency of a number of consumer products and certain industrial equipment. (42 U.S.C. 6291–6317, as codified) Title III, Part B[2] of EPCA established the Energy Conservation Program for Consumer Products Other Than Automobiles, which sets forth a variety of provisions designed to improve energy efficiency. (42 U.S.C. 6291–6309, as codified) These products include consumer water heaters, the subject of this document. (42 U.S.C. 6292(a)(4)) Title III, Part C[3] of EPCA, added by Public Law 95–619, Title IV, section 441(a), established the Energy Conservation Program for Certain Industrial Equipment, which again sets forth a variety of provisions designed to improve energy efficiency. (42 U.S.C. 6311–6317, as codified) This equipment includes commercial water heaters, which are also the subject of this document. (42 U.S.C. 6311(1)(k))

The energy conservation program under EPCA consists essentially of four parts: (1) Testing, (2) labeling, (3) the establishment of Federal energy conservation standards, and (4) certification and enforcement procedures. Relevant provisions of EPCA specifically include definitions (42 U.S.C. 6291; 42 U.S.C. 6311), test procedures (42 U.S.C. 6293; 42 U.S.C. 6314), labeling provisions (42 U.S.C. 6294; 42 U.S.C. 6315), energy conservation standards (42 U.S.C. 6295; 42 U.S.C. 6313), and the authority to require information and reports from manufacturers (42 U.S.C. 6296; 42 U.S.C. 6316).

The Federal testing requirements consist of test procedures that manufacturers of covered products and commercial equipment must use as the basis for: (1) Certifying to DOE that their products comply with the applicable energy conservation standards adopted pursuant to EPCA (42 U.S.C. 6295(s); 42 U.S.C. 6296; 42 U.S.C. 6316(a)–(b)), and (2) making representations about the efficiency of those products (42 U.S.C. 6293(c); 42 U.S.C. 6314(d)). Similarly, DOE must use these test procedures to determine whether the products comply with relevant standards promulgated under EPCA. (42 U.S.C. 6295(s))

Federal energy efficiency requirements for covered products and covered equipment established under EPCA generally supersede State laws and regulations concerning energy conservation testing, labeling, and standards. (42 U.S.C. 6297(a)–(c); 42 U.S.C. 6316(a)–(b)) However, DOE may grant waivers of Federal preemption in limited circumstances for particular State laws or regulations, in accordance with the procedures and other provisions of EPCA. (42 U.S.C. 6297(d); 42 U.S.C. 6316(a); 42 U.S.C. 6316(b)(2)(D))

Under 42 U.S.C. 6293, the statute sets forth the criteria and procedures DOE must follow when prescribing or amending test procedures for covered products. Specifically, EPCA requires that any test procedures prescribed or amended shall be reasonably designed to produce test results which measure energy efficiency, energy use, or estimated annual operating cost of a covered product during a representative average use cycle or period of use and shall not be unduly burdensome to conduct. (42 U.S.C. 6293(b)(3)) Under 42 U.S.C. 6314, the statute sets forth the criteria and procedures DOE must follow when prescribing or amending test procedures for covered equipment, reciting similar requirements at 42 U.S.C. 6314(a)(2).

In addition, the Energy Independence and Security Act of 2007 (EISA 2007) amended EPCA to require that DOE amend its test procedures for all covered consumer products to integrate measures of standby mode and off mode energy consumption. (42 U.S.C. 6295(gg)(2)(A)) Standby mode and off mode energy consumption must be incorporated into the overall energy efficiency, energy consumption, or other energy descriptor for each covered product unless the current test procedures already account for and incorporate standby and off mode energy consumption or such integration

[1] All references to EPCA in this document refer to the statute as amended through Energy Act of 2020, Public Law 116–260 (Dec. 27, 2020).

[2] For editorial reasons, upon codification in the U.S. Code, Part B was redesignated Part A.

[3] For editorial reasons, upon codification in the U.S. Code, Part C was redesignated Part A–1.

is technically infeasible. (42 U.S.C. 6295(gg)(2)(A)(i)–(ii)) If an integrated test procedure is technically infeasible, DOE must prescribe a separate standby mode and off mode energy use test procedure for the covered product, if technically feasible. (42 U.S.C. 6295(gg)(2)(A)(ii)) Any such amendment must consider the most current versions of the International Electrotechnical Commission (IEC) Standard 62301 [4] and IEC Standard 62087,[5] as applicable. (42 U.S.C. 6295(gg)(2)(A))

The American Energy Manufacturing Technical Corrections Act (AEMTCA), Public Law 112–210, further amended EPCA to require that DOE establish a uniform efficiency descriptor and accompanying test methods to replace the energy factor (EF) metric for covered consumer water heaters and the thermal efficiency (TE) and standby loss (SL) metrics for commercial water-heating equipment [6] within one year of the enactment of AEMTCA. (42 U.S.C. 6295(e)(5)(B)–(C)) The uniform efficiency descriptor and accompanying test method were required to apply, to the maximum extent practicable, to all water-heating technologies in use at the time and to future water-heating technologies, but could exclude specific categories of covered water heaters that do not have residential uses, can be clearly described, and are effectively rated using the TE and SL descriptors. (42 U.S.C. 6295(e)(5)(F) and (H)) In addition, beginning one year after the date of publication of DOE's final rule establishing the uniform descriptor, the efficiency standards for covered water heaters were required to be denominated according to the uniform efficiency descriptor established in the final rule (42 U.S.C. 6295(e)(5)(D)); and for affected covered water heaters tested prior to the effective date of the test procedure final rule, DOE was required to develop a mathematical factor for converting the measurement of their energy efficiency from the EF, TE, and SL metrics to the new uniform energy descriptor. (42 U.S.C. 6295(e)(5)(E)(i)–(ii))

EPCA also requires that, at least once every 7 years, DOE evaluate test procedures for each type of covered product and covered equipment, including consumer water heaters and commercial water heaters that are the subject of this document, to determine whether amended test procedures would more accurately or fully comply with the requirements for the test procedures to not be unduly burdensome to conduct and be reasonably designed to produce test results that reflect energy efficiency, energy use, and estimated operating costs during a representative average use cycle (or additionally, period of use for consumer products). (42 U.S.C. 6293(b)(1)(A); 6314(a)(1))

If the Secretary determines, on her own behalf or in response to a petition by any interested person, that a test procedure should be prescribed or amended, the Secretary shall promptly publish in the **Federal Register** proposed test procedures and afford interested persons an opportunity to present oral and written data, views, and arguments with respect to such procedures. (42 U.S.C. 6293(b)(2); 42 U.S.C. 6314(b)) The comment period on a proposed rule to amend a test procedure shall be at least 60 days [7] and may not exceed 270 days. (42 U.S.C. 6293(b)(2)) In prescribing or amending a test procedure, the Secretary shall take into account such information as the Secretary determines relevant to such procedure, including technological developments relating to energy use or energy efficiency of the type (or class) of covered products involved. (42 U.S.C. 6293(b)(2)). If DOE determines that test procedure revisions are not appropriate, DOE must publish in the **Federal Register** its determination not to amend the test procedures. (42 U.S.C. 6293(b)(1)(A)(ii); 42 U.S.C. 6314(a)(1)(A)(ii)) DOE is publishing this NOPR in satisfaction of the 7-year review requirement specified in EPCA.

B. Background

As stated previously in this document, DOE's current test procedure for consumer water heaters appears at appendix E.

Pursuant to the requirements of the AEMTCA amendments to EPCA discussed previously, DOE updated the consumer water heater test procedure through a final rule published on July 11, 2014 (July 2014 final rule). 79 FR 40542. The July 2014 final rule: Established a uniform energy descriptor (*i.e.,* uniform energy factor (UEF)) for all consumer water heaters and for commercial water heaters with consumer applications (*i.e.,* those commercial water heaters that met the newly established definition of a ''residential-duty commercial water heater''); extended coverage to eliminate certain gaps in the previous version of the consumer water heater test procedure, including small-volume storage water heaters (*i.e.,* with storage volumes between 2 and 20 gallons), large volume water heaters (*i.e.,* greater than 100 gallons for gas-fired and oil-fired storage water heaters and greater than 120 gallons for electric storage water heaters), and electric instantaneous water heaters; updated the draw pattern from a single 24-hour simulated-use test draw pattern to include several different draw patterns that vary depending on equipment capacity as measured by the first-hour rating (FHR) or maximum gallons per minute (Max GPM) test; and updated the outlet water temperature test condition requirement. 79 FR 40542, 40545, 40548, 40551–40554 (July 11, 2014).

As indicated, the uniform energy descriptor and the consumer water heater test procedure apply to ''residential-duty commercial water heaters,'' which were initially defined in the July 2014 final rule and include commercial water heaters with consumer applications. *Id.* at 79 FR 40586; 10 CFR 431.106(b)(1) and 10 CFR 431.110(b). DOE later amended the definition of a ''residential-duty commercial water heater'' in a final rule published on November 10, 2016 (November 2016 final rule), to define such equipment as any gas-fired storage, oil-fired storage, or electric instantaneous commercial water heater that meets the following conditions: (1) For models requiring electricity, uses single-phase external power supply; (2) Is not designed to provide outlet hot water at temperatures greater than

[4] IEC 62301, *Household electrical appliances—Measurement of standby power* (Edition 2.0, 2011–01).

[5] IEC 62087, *Methods of measurement for the power consumption of audio, video, and related equipment* (Edition 3.0, 2011–04).

[6] The initial thermal efficiency and standby loss test procedures for commercial water heating equipment (including residential-duty commercial water heaters) were added to EPCA by the Energy Policy Act of 1992 (EPACT 1992), Public Law 102–486, and corresponded to those referenced in the ASHRAE and Illuminating Engineering Society of North America (IESNA) Standard 90.1–1989 (*i.e.,* ASHRAE Standard 90.1–1989). (42 U.S.C. 6314(a)(4)(A)) DOE subsequently updated the commercial water heating equipment test procedures on two separate occasions—once in a direct final rule published on October 21, 2004, and again in a final rule published on May 16, 2012. These rules incorporated by reference certain sections of the latest versions of ANSI Standard Z21.10.3, *Gas Water Heaters, Volume III, Storage Water Heaters with Input Ratings Above 75,000 Btu Per Hour, Circulating and Instantaneous,* available at the time (*i.e.,* ANSI Z21.10.3–1998 and ANSI Z21.10.3–2011, respectively). 69 FR 61974, 61983 (Oct. 21, 2004) and 77 FR 28928, 28996 (May 16, 2012).

[7] For covered equipment, if the Secretary determines that a test procedure amendment is warranted, the Secretary must publish proposed test procedures in the **Federal Register**, and afford interested persons an opportunity (of not less than 45 days' duration) to present oral and written data, views, and arguments on the proposed test procedures. (42 U.S.C. 6314(b))

180 °F; and (3) Does not meet any of the following criteria:

Water heater type	Indicator of non-residential application
Gas-fired Storage	Rated input >105 kBtu/h; Rated storage volume >120 gallons.
Oil-fired Storage	Rated input >140 kBtu/h; Rated storage volume >120 gallons.
Electric Instantaneous	Rated input >58.6 kW; Rated storage volume >2 gallons.

81 FR 79261, 79321–79322; 10 CFR 431.102.

In the November 2016 final rule DOE also, in relevant part, revised some of the definitions for consumer water heater product classes and removed others. Definitions for both ''electric heat pump water heater'' and ''gas-fired heat pump water heater'' were removed, and revisions were made to the definitions of ''electric storage water heater'' and ''gas-fired storage water heater,'' which made each sufficiently broad to cover electric heat pump water heaters and gas-fired heat pump water heaters, respectively. 81 FR 79261, 79320–79321 (Nov. 10, 2016). The November 2016 final rule also amended the definitions of ''electric instantaneous water heater'', ''gas-fired instantaneous water heater'', ''oil-fired instantaneous water heater'', and ''oil-fired storage water heater.'' *Id.*

On December 29, 2016, DOE published a final rule (December 2016 final rule) that denominated the efficiency standards for consumer water heaters and residential-duty commercial water heaters in terms of the uniform efficiency descriptor (*i.e.,* the UEF metric) and established mathematical conversion factors to translate the EF, TE, and SL metrics to the UEF metric. 81 FR 96204. The published conversion factors were applicable for converting test results for a period of one year after the publication of the December 2016 final rule as required by EPCA, as amended by AEMTCA. 42 U.S.C. 6295(e)(5)(E)(v)(II); 81 FR 96204, 96208 (Dec. 29, 2016). The conversion factors translating previously tested EF, TE, and SL values to converted UEF values were removed from 10 CFR 429.17 on December 29, 2017, at which time all rated UEF values were to be based on actual testing to the test procedure published in the July 2014 final rule (*i.e.,* to the UEF test procedure). 81 FR 96204, 96235.

Most recently, on April 16, 2020, DOE published in the **Federal Register** a request for information (April 2020 RFI) seeking comments on the existing DOE test procedure for consumer water heaters and residential-duty commercial water heaters. 85 FR 21104. The April 2020 RFI discussed a draft version of the ANSI/ASHRAE Standard 118.2, which was published in March 2019 (March 2019 ASHRAE Draft 118.2), which is very similar to the existing DOE test procedure of consumer water heaters and residential-duty commercial water heaters. 85 FR 21104, 21108–21110 (April 16, 2020).

In the April 2020 RFI, DOE requested comments, information, and data about a number of issues, including: (1) Differences between the March 2019 ASHRAE Draft 118.2 and the existing DOE test procedure; (2) test tolerances for supply water temperature, ambient temperature, relative humidity, voltage, and gas pressure; (3) the location of the instrumentation that measures water volume or mass; and (4) how to test certain types of consumer water heaters that cannot be easily tested to the existing DOE test procedure (*i.e.,* recirculating gas-fired instantaneous water heaters, water heaters that cannot deliver water at 125 °F ±5 °F, and water heaters with storage volumes greater than 2 gallons that cannot have their internal tank temperatures measured). *Id.* at 85 FR 21109–21114.

DOE received comments in response to the April 2020 RFI from the interested parties listed in Table I.1.

TABLE I.1—LIST OF COMMENTERS WITH WRITTEN SUBMISSIONS IN RESPONSE TO THE APRIL 2020 RFI

Commenter(s)	Reference in this NOPR	Commenter type *
A.O. Smith Corporation	A.O. SMITH	M.
Air-Conditioning, Heating, and Refrigeration Institute	AHRI	TA.
American Public Gas Association	APGA	TA.
Appliance Standards Awareness Project, American Council for an Energy-Efficient Economy, Consumer Federation of America, National Consumer Law Center, Natural Resources Defense Council, and Northeast Energy Efficiency Partnerships.	Joint Advocates	AG.
Bradford White Corporation	BWC	M.
California Energy Commission	CEC	State.
CSA Group	CSA	TL.
Edison Electric Institute	EEI	U.
Keltech Inc	Keltech	M.
M C	M C	I.
Northwest Energy Efficiency Alliance	NEEA	AG.
Pacific Gas and Electric Company, San Diego Gas and Electric, and Southern California Edison	CA IOUs	U.
Rheem Manufacturing Company	Rheem	M.
Rinnai America Corporation	Rinnai	M.
Stone Mountain Technologies, Inc	SMTI	M.

* AG: Advocacy Group; State: Government Organization; I: Individual; M: Manufacturer; TA: Trade Association; TL: Test Laboratory; U: Utility or Utility Trade Association.

A parenthetical reference at the end of a comment quotation or paraphrase provides the location of the item in the public record.[8]

II. Synopsis of the Notice of Proposed Rulemaking

In this NOPR, DOE proposes to update appendix E, and related sections of the CFR, as follows:

(1) Incorporate by reference current versions of industry standards referenced by the current and proposed DOE test procedures: ASHRAE 41.1, ASHRAE 41.6, the pending update to ASHRAE 118.2 (contingent on it being substantively the same as the current draft under review), ASTM D2156, and ASTM E97.

(2) Add definitions for ''circulating water heater'', ''low temperature water heater'', and ''tabletop water heater''.

(3) Specify how a mixing valve should be installed when the water heater is designed to operate with one.

(4) Modify flow rate requirements during the FHR test for water heaters with a rated storage volume less than 20 gallons.

(5) Modify timing of the first measurement in each draw of the 24-hour simulated-use test.

(6) Clarify the determination of the first recovery period.

(7) Clarify the mass of water to be used to calculate recovery efficiency.

(8) Modify the terminology throughout appendix E to explicitly state ''non-flow activated'' and ''flow-activated'' water heater, where appropriate.

(9) Clarify the descriptions of defined measured values for the standby period measurements.

(10) Modify the test condition specifications and tolerances, including electric supply voltage tolerance, ambient temperature, ambient dry bulb temperature, ambient relative humidity, standard temperature and pressure definition, gas supply pressure, and manifold pressure.

(11) Add provisions to address gas-fired water heaters with measured fuel input rates that deviate from the certified input rate.

(12) Clarify provisions for calculating the volume or mass delivered.

(13) Add specifications for testing for the newly defined ''low temperature water heaters''.

(14) Clarify testing requirements for the heat pump part of a split-system heat pump water heater.

(15) Define the use of a separate unfired hot water storage tank for testing water heaters designed to operate with a separately sold hot water storage tank.

(16) Clarify that any connection to an external network or control be disconnected during testing.

(17) Add procedures for estimating internal stored water temperature for water heater designs in which the internal tank temperature cannot be directly measured.

(18) Modify the provisions for untested water heater basic models within 10 CFR 429.70(g) to include electric instantaneous water heaters.

DOE's proposed actions are summarized in Table II.1 and compared to the current test procedure; the reason for the proposed change is also listed.

TABLE II.1—SUMMARY OF CHANGES IN PROPOSED TEST PROCEDURE RELATIVE TO CURRENT TEST PROCEDURE

Current DOE test procedure	Proposed test procedure	Attribution
References the 1986 (Reaffirmed 2006) version of ASHRAE 41.1 for methods for temperature measurement.	References the updated 2020 version of ASHRAE 41.1 ...	Industry TP Update to ASHRAE 41.1.
The 1982 version of ASHRAE 41.6 for methods for humidity measurement is referenced within the 1986 version of ASHRAE 41.1.	References the 2014 version of ASHRAE 41.6, which is referenced by ASHRAE 41.1–2020.	Industry TP Update to ASHRAE 41.6.
References the 2009 version of ASTM D2156 for testing smoke density in flue gases from burning distillate fuels.	References the version of ASTM D2156 that was reaffirmed in 2018.	Industry TP Update to ASTM D2156.
The 1987 version of ASTM E97 for testing directional reflectance factor, 45-deg 0-deg, of opaque specimens by broad-band filter reflectometry is referenced within ASTM D2156–09.	References the 1987 version of ASTM E97, which is referenced by ASTM D2156–09 (2018).	Industry TP Update to ASTM E97.
Does not define a ''circulating water heater'' as used in 10 CFR 430.2.	Adds a definition for ''circulating water heater'' to 10 CFR 430.2.	To improve the representativeness of the test procedure.
Does not define a ''tabletop water heater'' as used as a product class distinction at 10 CFR 430.32(d).	Adds a definition for ''tabletop water heater'' to 10 CFR 430.2.	Reinstate definition inadvertently removed by previous final rule.
Does not address how to configure a water heater for test when a mixing valve is required for proper operation.	Specifies how a mixing valve should be installed when the water heater is designed to operate with one.	To improve the repeatability of the test procedure.
Requires the flow rate during the FHR test to be 1.0 ±0.25 gpm (3.8 ±0.95 L/min) for water heaters with a rated storage volume less than 20 gallons.	Requires the flow rate during the FHR test to be 1.5 ±0.25 gpm (3.8 ±0.95 L/min) for water heaters with a rated storage volume less than 20 gallons.	To improve the representativeness of the test procedure and to align with the industry test procedure ASHRAE 118.2.
Does not address the situation in which the first recovery ends during a draw when testing to the 24-hour simulated-use test.	Clarifies that the first recovery period will extend to the end of the draw in which the first recovery ended, and that if a second recovery initiates prior to the end of the draw, that the second recovery is part of the first recovery period as well.	To improve the repeatability of the test procedure.
The recovery efficiency equation for storage-type water heaters refers to the mass of water removed from the start of the test to the end of the first recovery period.	Clarifies that, for the calculation of recovery efficiency, the mass of water removed during the first recovery period includes water removed during all draws from the start of the test until the end of the first recovery period.	To improve the repeatability of the test procedure.

[8] The parenthetical reference provides a reference for information located in the docket of DOE's rulemaking to develop test procedures for consumer water heaters and residential-duty commercial water heaters. (Docket No. EERE–2019–BT–TP–0032, which is maintained at: *www.regulations.gov/docket/EERE-2019-BT-TP-0032*). The references are arranged as follows: (Commenter name, comment docket ID number, page of that document).

TABLE II.1—SUMMARY OF CHANGES IN PROPOSED TEST PROCEDURE RELATIVE TO CURRENT TEST PROCEDURE—Continued

Current DOE test procedure	Proposed test procedure	Attribution
Appendix E uses the phrases "storage-type" and "instantaneous-type" to refer to "non-flow activated" and "flow-activated" water heaters, respectively.	Uses the terms "non-flow activated" and "flow-activated" water heater, where appropriate.	Clarification.
The descriptions for $Q_{su,0}$, $Q_{su,f}$, $\overline{T}_{su,0}$, $\overline{T}_{su,f}$, τstby,1, $\overline{T}_{t,stby,1}$, and $\overline{T}_{a,stby,1}$ only address when the standby period occurs between draw clusters 1 and 2.	The descriptions for $Q_{su,0}$, $Q_{su,f}$, $\overline{T}_{su,0}$, $\overline{T}_{su,f}$, τstby,1, $\overline{T}_{t,stby,1}$, and $\overline{T}_{a,stby,1}$ are generalized to refer to the section where the standby period is determined.	Clarification.
Specifies that the first required measurement for each draw of the 24-hour simulated-use test is 5 seconds after the draw is initiated.	Specifies that the first required measurement for each draw of the 24-hour simulated-use test is 15 seconds after the draw is initiated.	Reduce burden.
Requires the electric supply voltage to be within ±1 percent of the rated voltage for the entire test.	Requires the electric supply voltage to be within ±2 percent of the rated voltage beginning 5 seconds after the start of a recovery and ending 5 seconds before the end of a recovery.	Reduce burden.
Requires maintaining ambient temperature for non-heat pump water heaters within a range of 67.5 °F ±2.5 °F.	Requires maintaining the ambient temperature for non-heat pump water heaters within a range of 67.5 °F ±5 °F, and with an average of 67.5 °F ±2.5 °F.	Reduce burden.
Requires maintaining the dry bulb temperature for heat pump water heaters within a range of 67.5 °F ±1 °F.	Requires maintaining the dry bulb temperature for heat pump water heaters within a range of 67.5 °F ±5 °F, and with an average of 67.5 °F ±1 °F during recoveries and an average of 67.5 °F ±2.5 °F when not recovering.	Reduce burden.
Requires maintaining the relative humidity for heat pump water heaters within a range of 50 percent ±2 percent.	Requires maintaining the relative humidity for heat pump water heaters within a range of 50 percent ±5 percent, and at an average of 50 percent ±2 percent during recoveries.	Reduce burden.
Requires that the heating value be corrected to a standard temperature and pressure, but does not state what temperature and pressure is standard or how to correct the heating value to the standard temperature and pressure.	States that the standard temperature is 60 °F (15.6 °C) and the standard pressure is 30 inches of mercury column (101.6 kPa). Provides a method for converting heating value from the measured to the standard conditions.	To improve the repeatability of the test procedure.
Requires that the manifold pressure be within ±10 percent of the manufacturer recommended value.	Clarifies that the manifold pressure tolerance applies only to water heaters with a pressure regulator that can be adjusted. Requires that the manifold pressure be within the greater of ±10 percent of the manufacturer recommended value or ±0.2 inches water column.	Reduce burden.
Does not specify the input rate at which the gas supply pressure tolerance is determined.	Specifies that the gas supply pressure tolerance is to be maintained when operating at the maximum input rate.	Clarification.
Does not contain procedures for modifying the orifice of a water heater that is not operating at the manufacturer specified input rate.	Adds provisions regarding the modification of the orifice ..	To improve the repeatability of the test procedure.
Does not specify how to calculate the mass removed from the water heater when mass is calculated indirectly using density and volume measurements.	Specifies how to calculate the mass of water indirectly using density and volume measurements.	To improve the repeatability of the test procedure.
Does not accommodate testing of "low temperature water heaters" in appendix E.	Adds a definition of "low temperature water heater" in 10 CFR 430.2 and requires low temperature water heaters to be tested to their maximum possible delivery temperature in appendix E.	To improve the representativeness and repeatability of the test procedure.
Does not explicitly define the test conditions required for each part of a split-system heat pump water heater.	Explicitly states that the heat pump part of a split-system heat pump water heater is tested at the dry bulb temperature and relative humidity conditions required for heat pump water heaters, and that the storage tank is tested at the ambient temperature and relative humidity conditions required for non-heat pump water heaters.	To improve the repeatability of the test procedure.
Does not accommodate testing of water heaters that require a separately-sold hot water storage tank to properly operate.	Requires water heaters designed to operate with a separately-sold hot water storage tank to use an 80-gallon unfired hot water storage tank for testing.	To improve the representativeness of the test procedure.
Does not address water heaters with network connection capabilities.	Explicitly states that any connection to an external network or control be disconnected during testing.	To improve the repeatability of the test procedure.
Does not accommodate certain water heaters for which the mean tank temperature cannot be directly measured.	Adds a "drain down" procedure to estimate the mean tank temperature for certain water heaters for which the mean tank temperature cannot be directly measured.	To improve the representativeness of the test procedure.

TABLE II.1—SUMMARY OF CHANGES IN PROPOSED TEST PROCEDURE RELATIVE TO CURRENT TEST PROCEDURE—Continued

Current DOE test procedure	Proposed test procedure	Attribution
10 CFR 429.70(g) does not allow untested electric instantaneous water heaters to be certified, but does allow untested electric storage water heaters to be certified.	Extends the untested provisions within 10 CFR 429.70(g) to include electric instantaneous water heaters.	Reduce burden.

Additionally, DOE proposes to interpret the statutory definition of consumer water heater to exclude certain larger capacity heat pump type units and that such units would be covered as commercial equipment.

DOE has tentatively determined that the proposed amendments described in section III of this NOPR would not significantly affect the measured efficiency of consumer and residential-duty commercial water heaters. Discussion of DOE's proposed actions are addressed in detail in section III of this NOPR.

III. Discussion

A. Scope of Applicability

This document covers those products that meet the definition of consumer ''water heater,'' as defined in the statute at 42 U.S.C. 6291(27), as codified at 10 CFR 430.2. This document also covers commercial water heating equipment with residential applications, *i.e.,* ''residential-duty commercial water heater'' (10 CFR 431.102).

1. Definitions

In the context of covered consumer products, EPCA defines ''water heater'' as a product which utilizes oil, gas, or electricity to heat potable water for use outside the heater upon demand, including—

(a) Storage type units which heat and store water at a thermostatically controlled temperature, including gas storage water heaters with an input of 75,000 Btu per hour or less, oil storage water heaters with an input of 105,000 Btu per hour or less, and electric storage water heaters with an input of 12 kilowatts or less;

(b) Instantaneous type units which heat water but contain no more than one gallon of water per 4,000 Btu per hour of input, including gas instantaneous water heaters with an input of 200,000 Btu per hour or less, oil instantaneous water heaters with an input of 210,000 Btu per hour or less, and electric instantaneous water heaters with an input of 12 kilowatts or less; and

(c) Heat pump type units, with a maximum current rating of 24 amperes at a voltage no greater than 250 volts, which are products designed to transfer thermal energy from one temperature level to a higher temperature level for the purpose of heating water, including all ancillary equipment such as fans, storage tanks, pumps, or controls necessary for the device to perform its function. (42 U.S.C. 6291(27); 10 CFR 430.2)

In addition, at 10 CFR 430.2, DOE defines several specific categories of consumer water heaters, as follows:

(1) ''Electric instantaneous water heater'' means a water heater that uses electricity as the energy source, has a nameplate input rating of 12 kW or less, and contains no more than one gallon of water per 4,000 Btu per hour of input.

(2) ''Electric storage water heater'' means a water heater that uses electricity as the energy source, has a nameplate input rating of 12 kW or less, and contains more than one gallon of water per 4,000 Btu per hour of input.

(3) ''Gas-fired instantaneous water heater'' means a water heater that uses gas as the main energy source, has a nameplate input rating less than 200,000 Btu/h, and contains no more than one gallon of water per 4,000 Btu per hour of input.

(4) ''Gas-fired storage water heater'' means a water heater that uses gas as the main energy source, has a nameplate input rating of 75,000 Btu/h or less, and contains more than one gallon of water per 4,000 Btu per hour of input.

(5) ''Grid-enabled water heater'' means an electric resistance water heater that—

(a) Has a rated storage tank volume of more than 75 gallons;

(b) Is manufactured on or after April 16, 2015;

(c) Is equipped at the point of manufacture with an activation lock and;

(d) Bears a permanent label applied by the manufacturer that—

(i) Is made of material not adversely affected by water;

(ii) Is attached by means of non-water-soluble adhesive; and

(iii) Advises purchasers and end-users of the intended and appropriate use of the product with the following notice printed in 16.5 point Arial Narrow Bold font: ''IMPORTANT INFORMATION: This water heater is intended only for use as part of an electric thermal storage or demand response program. It will not provide adequate hot water unless enrolled in such a program and activated by your utility company or another program operator. Confirm the availability of a program in your local area before purchasing or installing this product.''

(6) ''Oil-fired instantaneous water heater'' means a water heater that uses oil as the main energy source, has a nameplate input rating of 210,000 Btu/h or less, and contains no more than one gallon of water per 4,000 Btu per hour of input.

(7) ''Oil-fired storage water heater'' means a water heater that uses oil as the main energy source, has a nameplate input rating of 105,000 Btu/h or less, and contains more than one gallon of water per 4,000 Btu per hour of input.

The definition for ''grid-enabled water heater'' includes the term ''activation lock,'' which is defined to mean a control mechanism (either by a physical device directly on the water heater or a control system integrated into the water heater) that is locked by default and contains a physical, software, or digital communication that must be activated with an activation key to enable the product to operate at its designed specifications and capabilities and without which the activation of the product will provide not greater than 50 percent of the rated first-hour delivery of hot water certified by the manufacturer. 10 CFR 430.2. As specified in this definition, the control mechanism must be physically incorporated into the water heater or, if a control system, integrated into the water heater to qualify as an activation lock. DOE is aware of certain state programs that encourage water heaters to be equipped with communication ports that allow for demand-response communication between the water heater and the utility.[9] DOE notes that

[9] On May 7, 2019, the State of Washington signed House Bill 1444, which amended the Revised Code of Washington (RCW) (*i.e.,* the statutory code in the State of Washington), Title 19, Chapter 19.260 (RCW 19.260). On January 6, 2020, the State of Washington amended the Washington Administrative Code (WAC) (*i.e.,* the regulatory code in the State of Washington), Title 194, Chapter 194–24 (WAC 194–24) (Washington January 2020 Amendment) to align with RCW 19.260. Similarly, the State of Oregon published a final rule (Oregon August 2020 final rule) on August 8, 2020, which amended the Oregon Administrative Rules (OAR), Chapter 330, Division 92 (OAR–330–092). The Washington House Bill 1444 and the Oregon August 2020 final rule established a definition for electric storage water heater (RCW 19.260.020(14); OAR–330–092–0010(10)), an effective date of January 1,

presence of such a communication port, in and of itself, would not qualify as an activation lock for the purpose of classifying a water heater as a grid-enabled water heater.

In the April 2020 RFI, DOE requested comment on the definitions currently applicable to consumer water heaters. 85 FR 21104, 21108 (April 16, 2020). Sections III.A.1.a through III.A.1.e address specific issues either requested by DOE or submitted by commenters.

a. Electric Heat Pump Storage Water Heater

In the April 2020 RFI, DOE requested feedback on the need for creating a separate definition for ''electric heat pump storage water heater,'' similar to the definition in the March 2019 ASHRAE Draft 118.2, or whether the current DOE definitions in 10 CFR 430.2 for ''electric storage water heater'' and ''water heater,'' which include ''heat pump type units,'' would adequately cover such products for the purpose of performing the DOE test procedure. 85 FR 21104, 21110 (April 16, 2020). Rheem supported the creation of a separate definition for electric heat pump storage water heaters, specifically to clarify power rating limits and to include different design types. (Rheem, No. 14 at p. 3) Rinnai supported the inclusion of a definition for electric heat pump water heaters but not the creation of a separate product category. (Rinnai, No. 13 at p. 4) EEI stated that DOE should adopt the March 2019 ASHRAE Draft 118.2 definition for electric heat pump storage water heaters. (EEI, No. 8 at p. 3) On the other hand, BWC stated that the definition for ''electric heat pump water heater'' is adequate at this time. (BWC, No. 12 at p. 2) A.O. Smith stated that the introduction of the electric heat pump water heater definition from the March 2019 ASHRAE Draft 118.2 is unnecessary and will cause confusion due to the difference in scope, and that DOE's definitions for heat pump type units with additional clarification regarding maximum amperage and input power would be sufficient. (A.O. Smith, No. 20 at p. 2) AHRI stated that DOE should carefully review the entire heat pump water heater market, consider how each of the various designs should be characterized, and consider changes to the definitions, as necessary. (AHRI, No. 17 at p. 4) NEEA stated that no change to the definition is needed yet as the ''heat pump type units'' definition is adequate as written. (NEEA, No. 21 at p. 6) NEEA also requested that DOE clarify the boundary between residential and commercial heat pump water heaters for testing purposes and further stated that residential is implied to include input rates lower than 6 kW,[10] whereas commercial is implied to include input rates greater than 12 kW, such that the 6–12 kW range is ambiguous. (*Id.* at pp. 1–3)

DOE's consideration of the March 2019 ASHRAE Draft 118.2 ''electric heat pump storage water heater'' definition, the comments received in response to the April 2020 RFI, and a review of the market, lead DOE to revisit its prior application of the water heater definition in the context of heat pump type water heaters. DOE is re-evaluating these terms with additional consideration of the distinction between heat pump water heater consumer products and commercial products. More specifically, DOE proposes to clarify the application of the ''heat pump type'' provision in the EPCA definition of ''water heater.'' DOE proposes that the ''heat pump type'' provision specifies the criteria to distinguish consumer water heaters that incorporate heat pumps from commercial water heaters that incorporate heat pumps.

As noted, EPCA defines water heater to include ''(A) storage type units which heat and store water at a thermostatically controlled temperature, including . . . electric storage water heaters with an input of 12 kilowatts or less; (B) instantaneous type units which heat water but contain no more than one gallon of water per 4,000 Btu per hour of input, including . . . electric instantaneous water heaters with an input of 12 kilowatts or less; and (C) heat pump type units, with a maximum current rating of 24 amperes at a voltage no greater than 250 volts, which are products designed to transfer thermal energy from one temperature level to a higher temperature level for the purpose of heating water, including all ancillary equipment such as fans, storage tanks, pumps, or controls necessary for the device to perform its function.'' (42 U.S.C. 6291(27))

''Storage type units'' and ''instantaneous type units'' are not exclusive of ''heat pump type units.'' Based on the ''water heater'' definition, an electric heat pump type unit could be covered under the water heater definition's description of storage type units (if it heats and stores water at a thermostatically controlled temperature with an input of 12 kilowatts or less) or instantaneous type unit (if it heats water and contains no more than one gallon of water per 4,000 Btu per hour of input and has an input of 12 kilowatts or less). EPCA is not explicit as to whether heat pump type units are considered a subcategory of storage type units and instantaneous type units.

The November 2016 final rule treated heat pump type units as a subcategory of the other two types of units listed in the definition of water heater. Specifically, DOE stated in the November 2016 final rule that a heat pump water heater with a total rated input of less than 12 kW would be a consumer water heater, as EPCA classifies electric water heaters with less than 12 kW rated electrical input as consumer water heaters. 81 FR 79261, 79301–79302 (Nov. 10, 2016). However, upon a review of EPCA and the water heater market, DOE has tentatively determined that the interpretation presented in the November 2016 final rule is not the best reading of EPCA.

The structure of the statutory definition of ''water heater'' in the Energy Conservation Program for Consumer Products in Part A of EPCA, lists each type of water heater at equal subparagraph designations. Therefore, when defining ''water heater'' for the purpose of determining whether a water heater is a consumer water heater, the energy use criteria specified for heat pump type units[11] is to be applied separately and distinctly from the criteria specified for the broader categorizations of storage type units[12] and instantaneous type units.[13]

This separate consideration of heat pump type units when defining the scope of the consumer water heater definition is further supported by

2021 in Washington and January 1, 2022 in Oregon (RCW 19.260.080(1); OAR–330–092–0015(17)), a requirement that electric storage water heaters must have a modular demand response communications port compliant with the March 2018 version of the ANSI/CTA–2045–A communication interface standard, or a standard determined to be equivalent (RCW 19.260.080(1)(a)–(b); OAR–330–092–0020(17)), and, in Oregon, must bear a label or marking on the products stating either ''DR-ready: CTA–2045–A'' or ''DR-ready: CTA–2045–A and [equivalent DR system protocol]'' (OAR–330–092–0045(17)).

[10] Power equals amperage times voltage, so the definition of consumer heat pump type unit corresponds to a maximum power rating of 6,000 W, or 6 kW (24 A times 250 V equals 6,000 W).

[11] For heat pump type units EPCA specifies a maximum current rating of 24 amperes at a voltage no greater than 250 volts. (42 U.S.C. 6291(27)(C))

[12] For storage type units EPCA specifies gas storage water heaters with an input of 75,000 Btu per hour or less, oil storage water heaters with an input of 105,000 Btu per hour or less, and electric storage water heaters with an input of 12 kilowatts or less. (42 U.S.C. 6291(27)(A))

[13] For instantaneous type units EPCA specifies gas instantaneous water heaters with an input of 200,000 Btu per hour or less, oil instantaneous water heaters with an input of 210,000 Btu per hour or less, and electric instantaneous water heaters with an input of 12 kilowatts or less. (42 U.S.C. 6291(27)(B))

considering the output capacities associated with the input limits specified for each type of unit. The electrical requirements for heat pump type water heaters (*i.e.,* less than or equal to 24 amperes (A) at 250 volts (V) or less) align with common electrical requirements for a residential electrical circuit.[14] EPCA's energy use criteria for heat pump type units corresponds to an input rate of 6 kW.[15] Whereas, DOE's interpretation in the November 2016 final rule additionally applies the 12 kW input rate limit to heat pump type units. A heat pump type unit with an input rate of 12 kW would have a heating capacity (*i.e.,* output capacity) of approximately 42 kW, which is 3.6 times the output heating capacity provided by the largest possible consumer electric storage type water heater (*i.e.,* 11.8 kW).[16] While a heat pump type unit with a 12 kW input capacity could theoretically be designed and installed in a residential application, a water heating capacity (*i.e.,* output capacity) of 42 kW would far exceed the water heating demand of any residential installation.

This tentative interpretation is supported by the current market. DOE reviewed manufacturers' product literature and found no electric heat pump water heaters marketed towards residential use that were designed to operate at greater than 24 A at 250 V.

This proposed interpretation of the ''heat pump type'' provision would define the scope of ''water heater'' for the purpose of Part A of EPCA. The interpretation would not be applicable in the context of determining product classes for water heaters. Any such consideration of product classes would be governed by 42 U.S.C. 6295(q). As stated previously, ''storage type units'' and ''instantaneous type units'' are not exclusive of ''heat pump type units.'' The criteria established in the statutory definition of water heater for each of these types of units in the definition of ''water heater'' excludes units with capacities that would be more appropriately addressed as commercial water heaters.

When considering the unit types included in the water heater definition (*i.e.,* ''storage type,'' ''instantaneous type,'' and ''heat pump type'') as separate and distinct elements, the statutory definition of consumer water heater includes only those heat pump type units that have a maximum current rating of 24 A at a voltage no greater than 250 V. Heat pump type water heaters with an input capacity greater than the 24 A at 250 V do not meet the EPCA definition of a covered water heater. Instead, such units would be commercial water heaters, *i.e.,* if a heat pump type water heater has either an amperage greater than 24 A or a voltage greater than 250 V, under the definition it would be a commercial water heater.

EPCA defines covered equipment as certain types of industrial equipment, including storage water heaters and instantaneous water heaters. (42 U.S.C. 6311(1)(K)) EPCA defines ''industrial equipment,'' in relevant part, as ''any article of equipment [. . .] which is not a ''covered product'' as defined in 42 U.S.C. 6291(a)(2). (42 U.S.C. 6311(2)(A)) In the context of covered equipment, EPCA defines ''storage water heater'' as a water heater that heats and stores water within the appliance at a thermostatically controlled temperature for delivery on demand. Such term does not include units with an input rating of 4,000 Btu per hour or more per gallon of stored water. (42 U.S.C. 6311(12)(A)) The term ''instantaneous water heater'' is defined in the context of covered equipment as a water heater that has an input rating of at least 4,000 Btu per hour per gallon of stored water. (42 U.S.C. 6311(12)(B)) Under these EPCA definitions, a heat pump type water heater that was not defined as a consumer water heater would be either a commercial storage water heater or a commercial instantaneous water heater, depending on the input rating.

DOE has tentatively determined that heat pump water heaters, which operate with a maximum current rating greater than 24 A or at a voltage greater than 250 V, are more appropriately covered as commercial water heaters than consumer water heaters.

As discussed in the November 2016 final rule, electric heat pump water heaters with greater than 24 A at 250 V and a total input rate less than or equal to 12kW would be covered by the energy conservation standards for consumer electric storage water heaters. *See* 81 FR 79261, 79301–79302. (Nov. 10, 2016). These standards for consumer electric storage water heaters effectively require electric resistance technology at less than or equal to 55 gallons of rated storage volume or baseline[17] heat pump technology at greater than 55 gallons of rated storage volume. However, section 1.12.3 of the DOE test procedure at the time[18] only included heat pump water heaters which have ''a maximum current rating of 24 amperes (including the compressor and all auxiliary equipment such as fans, pumps, controls, and, if on the same circuit, any resistive elements) for an input voltage of 250 volts or less.'' Therefore, electric heat pump water heaters with greater than 24 A at 250 V were not considered in the analysis of the April 2010 final rule, and, as such, the electric storage water heater standards are not applicable to these heat pump water heaters. Under the proposed interpretation in this NOPR, electric heat pump water heaters with greater than 24 A at 250 V and a total input rate less than or equal to 12kW would be subject to the commercial water heater standards, which specify a maximum standby loss. 10 CFR 431.110(a). DOE notes that it has established a test procedure for commercial water heaters (10 CFR 431.106), and any representation made by a manufacturer as to the energy efficiency or energy use of a commercial water heater must be based on testing in accordance with the DOE test procedure, and such representation must fairly disclose the results of such testing. (42 U.S.C. 6314(d)(1))

In determining the input rate of a water heater with a heat pump component for the purpose of classifying such a water heater as either a consumer water heater or a commercial water heater, DOE would consider the total input rate, including all heat pump components and the resistive elements. As specified in the definition of ''water heater'' and ''commercial heat pump water heater,'' determination of the rated electric power input includes all ancillary

[14] In a safely designed home electrical circuit, a circuit breaker should only service outlets and/or devices that add up to 80 percent of the maximum current rating for the circuit breaker (*i.e.,* a 30 A circuit breaker should only service up to 24 A across all outlets and/or devices connected to that circuit breaker). Further, large appliances, such as water heaters, if installed on a dedicated circuit, should not exceed 80 percent of the circuit rating. See section 550.12(D) of the 2019 California Electrical Code: *www.nfpa.org/codes-and-standards/all-codes-and-standards/codes-and-standards/free-access?mode=view.*

[15] Power (in watts) is calculated as current (*i.e.,* amperage) multiplied by voltage. The EPCA criteria of 24 A and 250 V correspond to a power of 6,000 W (*i.e.,* 24 × 250 = 6,000), or 6 kW.

[16] A 12-kW electric resistance water heater with an assumed recovery efficiency of 98 percent would have an output heating capacity of 11.8 kW (*i.e.,* 12 kW × 0.98 = 11.8 kW). Whereas, an electric heat pump type water heater with a 12 kW input capacity, with an assumed recovery efficiency of 350 percent, would have an output heating capacity of 42 kW (*i.e.,* 12 kW × 3.5 = 42 kW), which is 3.6 times greater than the 11.8 kW output heating capacity of an electric resistance water heater with equivalent input capacity.

[17] The electric storage water heater energy conservation standards established by the April 2010 final rule set a minimum efficiency level that was attainable by all heat pump water heaters available at the time. Therefore, the standard did not eliminate any heat pump water heaters from the market.

[18] At the time of the April 2010 final, rule, the DOE test procedure for consumer water heaters was last updated by a final rule published on July 20, 1998. 63 FR 38737.

equipment. 10 CFR 430.2 and 10 CFR 431.102. Similarly, DOE would consider all heat pump components and resistive elements in determining voltage and amperage.

DOE reviewed the electric heat pump water heater market and found that several new configurations of heat pump water heaters have either become available or will soon become available on the market. Based its review of the market, DOE has identified these new configurations as electric storage water heaters that are heat pump type units.

In the present market, a consumer heat pump water heater typically consists of an air-source heat pump and a storage tank that are integrated together into one assembly. This ''typical'' consumer heat pump water heater uses electricity, operates around 240 volts, and has two 4,500-watt backup resistance elements within the storage tank that operate non-simultaneously. The new configurations that DOE identified include split-system heat pump water heaters (which consist of a separate heat pump and storage tank that are sold together), heat pump only models (which are sold without a storage tank but require being paired with one), ''retrofit-ready'' or ''plug-in'' heat pump water heaters (which are integrated heat pump and storage tank water heaters that can operate on a shared 120V/15A circuit and plugged into a standard 120 V receptacle (*i.e.,* wall outlet)), and ground- or water-source heat pump water heaters.

Split-system heat pump water heaters are currently available and used in residential applications; however, they are relatively uncommon when compared to typical integrated heat pump water heaters. Although split-system heat pump water heaters are more prevalent outside of the United States, they are produced by manufacturers that sell water heaters within the United States. As such, split-system water heaters may become more prevalent in the U.S. market in the future, and the DOE test procedure should adequately test these products. The current DOE test procedure covers split-system heat pump water heaters and the relevant proposed amendments are discussed in section III.C.8.b of this document. DOE has tentatively determined that split-system heat pump water heaters are covered by the current definitions of ''electric storage water heater'' and ''heat pump type units.''

DOE has identified heat pump water heaters models that are sold with only the heat pump (heat pump only water heaters) and must be paired with an external storage tank in the field, with the specific tank characteristics depending on the hot water requirements of the installation (*i.e.,* the heat pump can be used with storage tanks of various storage volumes). Currently, these units are marketed only for commercial use. However, some models of these units have rated voltage and amperage values below the limits specified in the ''heat pump type unit'' consumer water heater definition. Further, DOE has identified models that will soon enter the market that are marketed for residential and light-commercial use. To the extent that a heat pump only water heater is covered by the definition of ''heat pump type unit'' consumer water heater, it would be subject to the DOE test procedure for consumer water heaters. DOE proposes to add a definition to cover heat pump only water heaters to 10 CFR 430.2. This definition is presented in section III.A.1.c of this document where products with a similar application are discussed. Test procedure amendments proposed in this document specific to heat pump only water heaters are discussed in section III.C.8.c of this NOPR.

DOE reviewed the plug-in (or ''retro-fit ready'') heat pump water heater market described previously (integrated heat pump and storage tank water heaters that can operate on a 120V/15A circuit and plugged into a standard 120 V receptacle (*i.e.,* wall outlet)) and has initially found that these products are still under development and are not commercially available at this time. On December 23, 2019, NEEA published version 7.0 of its Advanced Water Heating Specification,[19] which includes an appendix that describes plug-in heat pump water heaters. As reported, these products are being designed as an integrated heat pump and storage tank for space-constrained installations (*e.g.,* small closets) and to operate on a shared 120V/15A circuit. Indications are that plug-in heat pump water heaters will be marketed for residential use, have input rates at or below the 12 kW threshold to be considered a consumer electric storage water heater, and have voltage and amperage levels below the 250 V and 24 A limits to be considered a ''heat pump type unit.'' Based on the initial information available, plug-in heat pump water heaters would be covered by either the current definition of ''electric storage water heater'' or ''heat pump type units.'' As plug-in heat pump water heaters are not currently available on the market, DOE is not proposing any changes to the test procedure specific to these products in this NOPR. DOE may reevaluate this tentative determination at such time as when these models enter the market.

DOE has also identified heat pump water heaters that use alternative heat sources (*e.g.,* water- or ground-source) that, although more commonly installed in commercial applications, do have residential applications and are at or below the 12kW limit to be considered a consumer ''water heater.'' Alternative source heat pump water heaters were not prevalent in the market at the time DOE established the current consumer water heater test procedure and therefore were not considered in the development of the current DOE test procedure. 79 FR 40542, 40566–40567 (July 11, 2014).

Significant changes and clarifications to the test setup and test conditions would be required to appropriately represent the various alternative source heat pump water heater components and installation requirements. The current test procedure for consumer water heaters incorporates draw patterns to represent an average period of use for the products subject to the test procedure. Section 5.4.1 of appendix E. Alternative source heat pump water heaters were not considered in the development of the current draw pattern requirements. Based on a current review of the market, these water heaters continue to have a small market share and indications are that they are predominantly used in commercial applications. DOE currently does not have data as to the use of such water heaters as installed. Absent such data, DOE is unable to develop and propose test procedure provisions that would be representative of such water heaters during an average period of use. To the extent there is no test procedure for such covered water heaters, they would not be subject to energy conservation standards. Because of the limited market share and unavailability of usage data, DOE has tentatively determined not to propose test procedures for these products.

Based on the forgoing discussion, DOE has tentatively determined that the current definitions of ''heat pump type'' and ''electric storage water heaters'' adequately cover the electric heat pump water heaters on the market that are representative of residential use, including ''plug in'' and alternative source heat pump water heaters, and that a separate definition for ''electric heat pump water heaters'' is not needed at this time. However, as discussed previously in this NOPR, DOE is

[19] Version 7.0 of NEEA's Advanced Water Heater Specification can be found at: *www.neea.org/img/documents/Advanced-Water-Heating-Specification.pdf.*

proposing to add a new definition to cover heat pump only water heaters.

b. Gas-Fired Heat Pump Storage Water Heater

In the April 2020 RFI, DOE requested feedback on whether a separate definition for ''gas-fired heat pump storage water heater,'' similar to the definition in the March 2019 ASHRAE Draft 118.2, was needed or whether the current DOE definitions in 10 CFR 430.2 for ''gas-fired storage water heater'' and ''water heater,'' which include ''heat pump type units,'' would adequately cover such products for the purpose of performing the DOE test procedure. 85 FR 21104, 21110 (April 16, 2020). AHRI, A.O. Smith, BWC, EEI, Rheem, Rinnai, and SMTI recommended that DOE add a separate definition for ''gas-fired heat pump storage water heater.'' (AHRI, No. 17 at p. 4; A.O. Smith, No. 20 at p. 2; BWC, No. 12 at p. 2; EEI, No. 8 at p. 3; Rheem, No. 14 at p. 3; Rinnai, No. 13 at p. 4; SMTI, No. 19 at p. 2) A.O. Smith further stated that the gas-fired storage water heater input capacity limit (less than or equal to 75,000 Btu/h) is not appropriate for defining a gas-fired heat pump storage water heater that is representative of residential applications. (A.O. Smith, No. 20 at p. 2) AHRI stated that a separate definition for ''gas-fired heat pump water heater'' is appropriate and that DOE had already established a definition for it as part of the July 2014 final rule. (AHRI, No. 17 at p. 4) However, CEC stated there is no need to add a definition for ''gas-fired heat pump storage water heater'' because the definition currently in 10 CFR 430.2 for ''gas-fired storage water heater'' and ''water heater'' includes ''heat pump type units,'' which adequately covers gas-fired heat pump storage water heaters. (CEC, No. 11 at p. 2) CEC argued that introducing the new definition as suggested under the March 2019 ASHRAE Draft 118.2 would indirectly limit the scope of heat pump water heaters standards by limiting the size of the gas-fired heat pump water heaters to be tested. (*Id.*) NEAA agreed that the current definitions for ''gas-fired storage water heater'' and ''heat pump units'' are adequate to cover gas-fired heat pump storage water heaters for purposes of testing, but the commenter noted there is value in creating a definition for market clarity. (NEEA, No. 21 at p. 6)

In the July 2014 final rule, DOE defined a ''gas-fired heat pump water heater'' as ''a water heater that uses gas as the main energy source, has a nameplate input rating of 75,000 Btu/h (79 MJ/h) or less, has a maximum current rating of 24 amperes (including all auxiliary equipment such as fans, pumps, controls, and, if on the same circuit, any resistive elements) at an input voltage of no greater than 250 volts, has a rated storage volume not more than 120 gallons (450 liters), and is designed to transfer thermal energy from one temperature level to a higher temperature level to deliver water at a thermostatically controlled temperature less than or equal to 180 °F (82 °C).'' 79 FR 40542, 40567 (July 11, 2014). DOE also stated that gas-fired heat pump water heaters are covered by the test procedure established in the July 2014 final rule. *Id.* at 79 FR 40549. The November 2016 final rule replaced this definition with the current definition of ''gas-fired storage water heater.'' 81 FR 79261, 79320–79321 (Nov. 10, 2016). The current definition of ''water heater,'' which includes ''heat pump type units'' was added in a final rule published on February 7, 1989. 54 FR 6062, 6075. DOE reasoned in the November 2016 final rule that, because the definition of ''gas-fired heat pump water heater'' is not used in DOE's test procedures or energy conservation standards for consumer waters, removing this definition will have no effect on the implementation of DOE's regulations. 81 FR 79261, 79287.

Currently, a water heater that uses gas as the main energy source, has a nameplate input rating of 75,000 Btu/h or less, and contains more than one gallon of water per 4,000 Btu per hour of input is a gas-fired storage water heater. 10 CFR 430.2. If the gas-fired storage water heater also has a heat pump with a maximum current rating of 24 amperes at a voltage no greater than 250 volts, is designed to transfer thermal energy from one temperature level to a higher temperature level for the purpose of heating water, including all ancillary equipment such as fans, storage tanks, pumps, or controls necessary for the device to perform its function, it would be a heat pump type unit. 10 CFR 430.2. This definition of heat pump type unit is not exclusive of gas-fired units.

The input rate of models currently in development for residential application are less than 20,000 Btu/h, which the March 2019 ASHRAE Draft 118.2 defines as the limit for gas-fired heat pump water heaters, and which is well below the 75,000 Btu/h limit in DOE's regulations. Gas-fired heat pump water heaters currently under design will likely have voltage and amperage requirements below the DOE ''heat pump type unit'' requirements, as electricity is not the main fuel source. Recognizing that the market for heat pump type units that are gas-fired is still developing, limiting coverage to less than 20,000 Btu/h (consistent with March 2019 ASHRAE Draft 118.2) would not accommodate the potential for future products designed for residential applications that may have input rates above 20,000 Btu/h. Therefore, DOE has tentatively determined that the definitions of ''heat pump type'' and ''gas-fired storage water heaters'' adequately cover the water heaters that are within the ASHRAE definition of ''gas-fired heat pump water heaters,'' and a separate DOE regulatory definition is not needed at this time. Further, as DOE stated in the July 2014 final rule, gas-fired heat pump water heaters are covered by the DOE test procedure established in that rule. 79 FR 40542, 40549 (July 11, 2014).

c. Gas-Fired Instantaneous Water Heater

As discussed previously in this document, a gas-fired instantaneous water heater is a water heater that uses gas as the main energy source, has a nameplate input rating less than 200,000 Btu/h, and contains no more than one gallon of water per 4,000 Btu per hour of input. 10 CFR 430.2. In the April 2020 RFI, DOE requested feedback on the typical application of a specific configuration of gas-fired instantaneous water heaters, commonly referred to as ''circulating gas-fired instantaneous water heaters.'' 85 FR 21104, 21113 (April 16, 2020). As explained in the April 2020 RFI, DOE has found that several manufacturers produce consumer gas-fired instantaneous water heaters that are designed to be used with a volume of stored water (usually in a tank, but sometimes in a recirculating hot water system of sufficient volume, such as a hydronic space heating or designated hot water system) in which the water heater does not provide hot water directly to fixtures, such as a faucet or shower head, but rather replenishes heat lost from the tank or system through hot water draws or standby losses by circulating water to and from the tank or other system. *Id.* These circulating gas-fired instantaneous water heaters are typically activated by an aquastat [20] installed in a storage tank that is sold separately or by an inlet water temperature sensor. *Id.* DOE further stated that while the products identified by DOE are within the statutory and regulatory definition of a consumer water heater as a covered product, the design and application of circulating gas-fired instantaneous water heaters makes testing to the consumer water

[20] An ''aquastat'' is a temperature measuring device typically used to control the water temperature in a separate hot water storage tank.

heater test procedure difficult, if not impossible, as these products are not capable of delivering water at the temperatures and flow rates specified in the UEF test method. *Id.*

In response to the April 2020 RFI, AHRI, APGA, Rheem, and Rinnai recommended generally that DOE amend the regulatory definitions of gas-fired instantaneous water heaters to exclude models designed exclusively for commercial use with input rates below the consumer water heater input rate limit *(i.e.,* ≤200,000 Btu/h) and provided circulating gas-fired instantaneous water heaters as an example. (AHRI, No. 17 at p. 2; APGA, No. 16 at pp. 1–2; Rheem, No. 14 at p. 2; Rinnai, No. 13 at p. 2) A.O. Smith addressed circulating gas-fired water heaters specifically, stating that these models are produced at input rates both above and below the consumer water heater input rate cut-off for gas-fired instantaneous water heaters, and that all circulating water heaters, regardless of input rate, serve commercial applications; as such, they should be excluded from the consumer water heater regulations. (A.O. Smith, No. 20 at pp. 1–2) AHRI, Rheem, and Rinnai stated that these types of water heaters are sold into commercial building applications and should not be tested using a residential draw profile, which would not be applicable. (AHRI, No. 17 at p. 11; Rheem, No. 14 at p. 8; Rinnai, No. 13 at p. 10)

Currently, an enforcement policy [21] is in place addressing circulating water heaters. As provided in the enforcement policy, DOE will not seek civil penalties for the failure to properly certify covered products or the distribution in commerce by a manufacturer or private labeler of covered products that are not in compliance with an applicable energy conservation standard, if the violation occurs on or before December 31, 2021, with respect to an individual model of water heater that:

- Meets the statutory definition of an instantaneous type of consumer water heater per 42 U.S.C. 6291(27);
- Does not have an operational scheme in which the burner or heating element initiates and terminates heating based on sensing flow;
- Has a water temperature sensor located at the inlet of the water heater or in a separate storage tank that is the primary operating temperature means of initiating and terminating heating;
- Must be used in combination with a recirculating pump and either a separate storage tank or water circulation loop in order to achieve the water flow and temperature conditions recommended in the manufacturer's installation and operation instructions;
- Is designed to provide outlet hot water at a thermostatically controlled temperature greater than 180 °F; and
- Meets the corresponding energy conservation standards in 10 CFR 431.110.

As provided in the enforcement policy, a water heater must first meet the statutory definition of an instantaneous type of consumer water heater per 42 U.S.C. 6291(27) in order to be a circulating water heater. Inherent to being a water heater per 42 U.S.C. 6291(27), a product must be a ''consumer product.'' DOE's authority under the Energy Conservation Program for Consumer Products Other Than Automobiles established by EPCA (42 U.S.C. 6291–6309) applies to ''consumer products.'' (*See* 42 U.S.C. 6292)

In relevant part, 42 U.S.C. 6291(1) states that a ''consumer product'' means any article of a type which, to any significant extent, is distributed in commerce for personal use or consumption by individuals. Through an examination of product literature, DOE has found that circulating water heaters are predominately marketed for commercial applications. However, the input rates of many of the available models are below the maximum input rate of a consumer water heater and can therefore be suitable for residential applications. As such, DOE has tentatively determined that circulating water heaters are covered ''consumer products.'' Further, circulating water heaters operate similarly to the heat pump only water heaters discussed in section III.A.1.a, which DOE tentatively determined are marketed towards consumers and have residential applications (*e.g.,* they extract water from a storage tank, heat the water, and return the heated water to the storage tank). The circulating water heaters currently on the market circulate water at high flow rates (*e.g.,* greater than 10 gpm) and are, for the most part, designed to deliver water at a temperature greater than 180 °F. These characteristics suggest that the circulating water heaters on the market would not be appropriate for residential applications. However, when developing the test procedure currently in appendix E, DOE is required to develop a test procedure that applied, to the maximum extent practicable, to all water heating technologies in use and to future water heating technologies. (42 U.S.C. 6295(e)(5)(H)) As a circulating water heater could be designed to operate in a similar manner to other consumer water heaters (*i.e.,* heat pump only water heaters) and at conditions appropriate for residential applications, DOE is required to amend appendix E to address these products.

DOE proposes to add the definition described below for circulating water heaters to 10 CFR 430.2. The proposed definition also covers heat pump only water heaters which are discussed in section III.A.1.a in this NOPR. Test procedure amendments for circulating water heaters are discussed in section III.C.9 of this document.

DOE proposes to define ''circulating water heater'' at 10 CFR 430.2 as ''an instantaneous or heat pump type water heater that does not have an operational scheme in which the burner, heating element, or compressor initiates and terminates heating based on sensing flow; has a water temperature sensor located at the inlet of the water heater or in a separate storage tank that is the primary means of initiating and terminating heating; and must be used in combination with a recirculating pump and either a separate storage tank or water circulation loop in order to achieve the water flow and temperature conditions recommended in the manufacturer's installation and operation instructions.''

With regard to the other gas-fired instantaneous water heaters referenced by commenters, DOE has also examined the market for gas-fired instantaneous water heaters with an emphasis on product lines with input rates both above and below the consumer and commercial input rate threshold of 200,000 Btu/h. The models with an input rate at or below the 200,000 Btu/h threshold could be used in consumer applications, are nearly indistinguishable from water heaters marketed and used in consumer applications, and are completely self-contained; that is, no other components would be required for these products to operate within a residence. As such, DOE has tentatively determined that these models continue to be considered ''consumer products'' and are subject to the test procedures and energy conservation standards for consumer gas-fired instantaneous water heaters.

DOE has also examined gas-fired water heaters with input rates of 200,000 Btu/h or less, containing less than one gallon of water per 4,000 Btu/h of input, and with rated storage volumes greater than 2 gallons. In the July 2014 final rule, storage volume requirements were removed from the definition of a ''gas-fired instantaneous water heater.'' 79 FR 40542, 40567 (July 11, 2014). In the December 2016 final

[21] Enforcement policy for circulating water heaters is available at: *www.energy.gov/sites/prod/files/2019/09/f66/Enforcement%20Policy-CirculatingWH.92019.pdf.*

rule, DOE stated that definitions for consumer water heaters added to EPCA under the National Appliance Energy Conservation Act of 1987 (NAECA; Pub. L. 100–12 (March 17, 1987)), which amended EPCA, do not place any limitation on the storage volume of consumer water heaters. (42 U.S.C. 6291(27); 81 FR 96204, 96210 (Dec. 29, 2016)) DOE further stated that the energy conservation standards established by EPCA for consumer water heaters apply to all consumer water heaters regardless of storage volume. 81 FR 96204, 96210. DOE also acknowledged that its delay in issuing test procedures for such products, as well as statements it has made in the past, may have caused confusion about whether these products are covered by energy conservation standards for consumer water heaters, and that achieving compliance with the statutory standards immediately would be quite burdensome for industry. *Id.* at 81 FR 96211. As such, DOE stated that it will not enforce the statutory standards applicable to these products until some point after DOE finalizes a conversion factor and the converted standards applicable to those products. *Id.* DOE has tentatively determined that the interpretation presented in the December 2016 final rule for gas-fired instantaneous water heaters with storage volume greater than 2 gallons is still valid.

d. Tabletop Water Heaters

On January 17, 2001, DOE published a final rule (January 2001 final rule) that established definitions and created a separate product class for tabletop water heaters. 66 FR 4474. A ''tabletop water heater,'' was defined in the January 2001 final rule as a water heater in a rectangular box enclosure designed to slide into a kitchen countertop space with typical dimensions of 36 inches high, 25 inches deep, and 24 inches wide. *Id.* at 66 FR 4497. The definition for ''tabletop water heater'' was removed from appendix E as part of the July 2014 final rule and was inadvertently not added to 10 CFR 430.2. 79 FR 40542, 40567–40568 (July 11, 2014). However, energy conservation standards for tabletop water heaters are still specified at 10 CFR 430.32(d).

In the April 2020 RFI, DOE requested feedback on whether the previous definition for ''tabletop water heater'' is still appropriate, and whether such products should continue to be considered separately from other classes of consumer water heaters. 85 FR 21104, 21108 (April 16, 2020). AHRI, A.O. Smith, BWC, Rheem, and Rinnai commented that the definition for ''tabletop water heater'' is still appropriate and should remain as a separate product class. (AHRI, No. 17 at p. 3; A.O. Smith, No. 20 at p. 2; BWC, No. 12 at p. 2; Rheem, No. 14 at p. 2; Rinnai, No. 13 at p. 2) EEI suggested that the definition include a rated capacity of at least 20 gallons and exclude the phrases ''rectangular box'' and ''designed to slide into a kitchen countertop space'' to make the definition broader. (EEI, No. 8 at p. 3) Keltech stated that point-of-use (POU) units may benefit from being classified as a ''tabletop water heater'' and that a category should be created for POU water heaters that can be installed under a countertop. (Keltech, No. 7 at p. 1)

In the January 2001 final rule, DOE separated tabletop water heaters from the electric storage water heater product class ''due to strict size limitations for these products.'' 66 FR 4474, 4478 (Jan. 17, 2001). Tabletop water heaters are a unique type of water heater that are designed to fit into a countertop and provide a working surface in the installed location; as such, they are inherently size-constrained. DOE has tentatively determined that excluding the phrases ''rectangular box'' and ''designed to slide into a kitchen countertop space'' would make the tabletop water heater definition broader but would also remove the distinction of the key features that distinguish tabletop water heaters from electric storage water heaters (*i.e.,* the tabletop water heater product class addresses the very specific size limitations and location installations associated with these products). Further, the addition of a minimum rated storage volume of 20 gallons would define a scope of coverage that might not include the full volume range of water heaters in a rectangular box enclosure designed to slide into a kitchen countertop space. Therefore, DOE has tentatively determined not to add a minimum rated storage volume.

A POU water heater is, in general terms, a water heater that is located where the hot water is needed (*e.g.,* under a sink or counter). Water heaters that are installed under sinks or counters are typically small electric storage water heaters (30 gallons or less) or electric instantaneous water heaters. For small electric storage water heaters, these products are currently covered by the definition for electric storage water heater, which does not have storage volume requirements. *See* 10 CFR 430.2. The test procedure for electric storage water heaters varies slightly depending on the delivery capacity of the water heater, which is a result of the first-hour rating test. *See* section 5.4.1 of appendix E. DOE has tentatively determined that POU or small electric storage water heaters are adequately covered by the current DOE test procedure when tested to the very small or low draw patterns. The same can be said for electric instantaneous water heaters, for which the test procedure also varies slightly depending on the delivery capacity of the water heater, which is a result of the Max GPM test. *See* section 5.4.1 of appendix E.

For the reasons discussed previously, DOE proposes to add the ''tabletop water heater'' definition that was removed from appendix E in the July 2014 final rule to 10 CFR 430.2.

e. Residential-Duty Commercial Water Heaters

In the April 2020 RFI, DOE requested comment on the definition for ''residential-duty commercial water heater,'' which defines a category of commercial water heaters that are subject to the consumer water heater test procedure. 85 FR 21104, 21108 (April 16, 2020). AHRI, A.O. Smith, Rheem, and Rinnai supported the current definition of ''residential-duty commercial water heater'' and had no recommended changes. (AHRI, No. 17 at p. 3; A.O. Smith, No. 20 at p. 2; Rinnai, No. 13 at p. 3; Rheem, No. 14 at p. 2) Keltech recommended adding the intended market for the water heater as another criteria for determining whether a water heater is a residential-duty commercial water heater and stated that if a water heater is not intended for sale in a consumer setting, it should not be held to consumer requirements. (Keltech, No. 7 at p. 1) DOE acknowledges that some water heaters, which are intended for commercial use, are covered by the residential-duty commercial water heater definition and tested and rated to the consumer water heater test procedure and residential-duty commercial water heater energy conservation standards. These water heaters have characteristics that are similar to water heaters with residential applications and, as such, under 42 U.S.C. 6295(e)(5)(F), cannot be excluded from being tested and rated using the consumer water heaters test procedure and residential-duty commercial water heater energy conservation standards. Further, DOE has tentatively determined that whether a product is marketed as commercial or residential may not always be indicative of the intended installation location. For example, water heaters intended for residential use are sometimes marketed as ''commercial-grade'' as a means to convey

reliability.[22] Therefore, DOE has tentatively determined not to amend the definition for ''residential-duty commercial water heater.''

B. Updates to Industry Standards

The current DOE test procedure in appendix E references the following industry standards:

- ASHRAE 41.1–1986 (Reaffirmed 2006), Standard Method for Temperature Measurement (ASHRAE 41.1–1986 (RA 2006)); and
- ASTM D2156–09, (ASTM D2156–09), Standard Test Method for Smoke Density in Flue Gases from Burning Distillate Fuels.

ASHRAE 41.1–1986 (RA 2006) was superseded by ASHRAE 41.1–2013 on January 30, 2013 (ASHRAE 41.1–2013). ASHRAE 41.1–2013 was superseded by ASHRAE 41.1–2020 on June 30, 2020. Updates to ASHRAE 41.1 are discussed in section III.B.1.

ASTM D2156–09 was reapproved without modification in 2018 (ASTM D2156–09 (RA 2018)). Therefore, DOE proposes to update the reference of ASTM D2156–09 to the most recent industry standard (*i.e.,* ASTM D2156–09 (RA 2018)). ASTM D2156–09 and ASTM D2156–09 (RA 2018) directly reference ASTM E97–1987 (W1991), which is necessary to perform the procedures within ASTM D216–09 and ASTM D2156–09 (RA 2018). Therefore, DOE also proposes to incorporate by reference ASTM E97–1987 (W1991).

ASHRAE maintains a published water heater test procedure titled, ''ANSI/ASHRAE Standard 118.2–2006 (RA 2015), Method of Testing for Rating Residential Water Heaters'' (ANSI/ASHRAE 118.2–2006 (RA 2015)). The ANSI/ASHRAE 118.2–2006 (RA 2015) test procedure is similar to the DOE test procedure that was in effect prior to the July 2014 final rule, although neither the former nor the current DOE consumer water heater test procedure reference ANSI/ASHRAE Standard 118.2–2006 (RA 2015). In March 2019, ASHRAE published the March 2019 ASHRAE Draft 118.2, the second public review draft of Board of Standards Review (BSR) ANSI/ASHRAE Standard 118.2–2006R, ''Method of Testing for Rating Residential Water Heaters and Residential-Duty Commercial Water Heaters,'' which DOE referenced in the April 2020 RFI. 85 FR 21104, 21109–21111 (April 16, 2020). In April 2021, ASHRAE published substantive changes to a previous public review draft[23] of BSR ANSI/ASHRAE Standard 118.2–2006R, ''Method of Testing for Rating Residential Water Heaters and Residential-Duty Commercial Water Heaters.'' (April 2021 ASHRAE Draft 118.2) The March 2019 ASHRAE Draft 118.2 and April 2021 ASHRAE Draft 118.2 are examined together in section III.B.2. Both the March 2019 ASHRAE Draft 118.2 and April 2021 ASHRAE Draft 118.2 are similar to the current DOE test procedure but include some differences throughout, some of which would result in test procedure results different from the current DOE test procedure.

As discussed previously in this document, DOE will adopt industry test standards as DOE test procedures for covered products and equipment, unless such methodology would be unduly burdensome to conduct or would not produce test results that reflect the energy efficiency, energy use, water use (as specified in EPCA) or estimated operating costs of that equipment during a representative average use cycle. 10 CFR part 430, subpart C, appendix A, Section 8(c). While DOE would only consider adopting through incorporation by reference (IBR) a finalized version of ASHRAE 118.2, DOE is interested in receiving comments on the merits of the draft in anticipation of such a possibility, or to consider incorporating aspects of the draft into a revised DOE test procedure. The differences between the March 2019 ASHRAE Draft 118.2, the April 2021 ASHRAE Draft 118.2, and the DOE test procedure are discussed in section III.B.2 of this NOPR.

1. ASHRAE 41.1

As stated previously, ASHRAE 41.1–1986 (RA 2006) was superseded by ASHRAE 41.1–2013 and ASHRAE 41.1–2013 was superseded by ASHRAE 41.1–2020. ASHRAE 41.1–2013 removed the aspirated wet bulb psychrometer descriptions and stated they would be included in the next revision to ASHRAE 41.6, ''Standard Method for Humidity Measurement.'' ASHRAE 41.6 was updated on July 3, 2014 and included the aspirated wet bulb psychrometer descriptions that were removed in ASHRAE 41.1–2013. ASHRAE 41.1–2013 also added uncertainty analysis for temperature measurements, information for thermistor-type devices, descriptions for thermopiles, and reorganized the standard to be consistent with other ASHRAE standards. ASHRAE 41.1–2020 added conditional steady-state test criteria and further updated the standard to meet ASHRAE's mandatory language requirements.

Section 3.2.1 of appendix E requires that temperature measurements be made in accordance with ASHRAE 41.1–1986 (RA 2006), and section 3.2.2 of appendix E provides accuracy and precision requirements for air dry bulb, air wet bulb, inlet and outlet water, and storage tank temperatures. Sections 5.2.2.1 and 5.3.2 of appendix E effectively require steady-state operation in which the flow-activated water heater is operating at the maximum input rate, is supplied with water at a temperature of 58 °F ±2 °F, and delivers water at a temperature of 125 °F ±5 °F.

DOE reviewed ASHRAE 41.1–1986 (RA 2006), ASHRAE 41.1–2013, and ASHRAE 41.1–2020 and found that the sections most relevant to appendix E are the temperature measurement sections (*i.e.,* sections 5 through 11 of ASHRAE 41.1–1986 (RA 2006), section 7 of ASHRAE 41.1–2013, and section 7 of ASHRAE 41.1–2020)[24] and the steady-state test criteria added in ASHRAE 41.1–2020. The information in the temperature measurement sections of the three versions of ASHRAE 41.1 examined does not vary significantly. The additional steady-state test criteria of ASHRAE 41.1–2020 varies significantly from and is more stringent than[25] the criteria specified in sections 5.2.2.1 and 5.3.2 of appendix E; however, the appendix E criteria supersedes those in ASHRAE 41.1–2020. DOE has tentatively determined that updating the reference of ASHRAE 41.1–1986 (RA 2006) to the most recent version of the industry standard (*i.e.,* ASHRAE 41.1–2020) would not have a significant effect on the test results, as the content of the relevant sections of the ASHRAE 41.1 standards have not changed significantly and the new

[22] A water heater designed to be installed in commercial applications will typically be used more often and be subjected to environments that are harsher than would be experienced by a water heater designed to be installed in residential application. Therefore, a ''commercial-grade'' water heater could be considered more reliable, as it can operate longer in such an environment without malfunctioning.

[23] The April 2021 ASHRAE Draft 118.2 shows only the proposed substantive changes to the March 2019 ASHRAE Draft 118.2. All sections not included in the April 2021 ASHRAE Draft 118.2 are as proposed in the March 2019 ASHRAE Draft 118.2 or have not been changed in a way that their content affects the results of the test procedure proposed in the March 2019 ASHRAE Draft 118.2.

[24] Sections 5 through 11 of ASHRAE 41.1–1986 (RA 2006) were combined into section 7 of ASHRAE 41.1–2013.

[25] If adopted, section 5.5.3 of ASHRAE 41.1–2020 would be used to determine steady-state operation within sections 5.2.2.1 and 5.3.2 of appendix E. Using this criteria, a flow-activated water heater delivering water between 120 °F and 121 °F, which is within the current delivery temperature range of 125 °F ±5 °F, would not be considered in steady-state due to the difference in temperature between the average of the sample and the set point temperature.

content published in ASHRAE 41.1–2020 is superseded by appendix E. As such, DOE proposes to update the reference of ASHRAE 41.1–1986 (RA 2006) to ASHRAE 41.1–2020. ASHRAE 41.1–2020 references ASHRAE 41.6–2014 and requires its use when measuring the wet bulb temperature. The wet bulb temperature is required when testing heat pump water heaters to appendix E and, therefore, DOE proposes to incorporate by reference ASHRAE 41.6–2014.

2. ASHRAE 118.2

a. Scope

Section 2 of the March 2019 ASHRAE Draft 118.2 defines the scope of products covered by the industry test standard more narrowly than the definitions for consumer water heaters and relevant commercial water heater definitions contained in EPCA. For example, section 2 of the March 2019 ASHRAE Draft 118.2 limits the storage volume for storage-type water heaters to 120 gallons or less and limits the maximum delivery temperature to 180 °F (82 °C), whereas EPCA does not define limits on storage volume or maximum delivery temperature (42 U.S.C. 6291(27); 42 U.S.C. 6311(12)(A)–(B).

In the April 2020 RFI, DOE requested comment on whether the March 2019 ASHRAE Draft 118.2 test method could be applied to water heaters beyond the scope defined in the March 2019 ASHRAE Draft 118.2 to cover all water heaters included within the scope of DOE's definitions for consumer water heaters and residential-duty commercial water heaters. 85 FR 21104, 21110 (April 16, 2020). And if modifications to the March 2019 ASHRAE Draft 118.2 would be required, DOE requested comment on what those modifications should be. *Id.* CA IOUs and Rinnai expressed their understanding that the March 2019 ASHRAE Draft 118.2 applies to all water heaters within the current scope of DOE's test procedure. (CA IOUs, No. 18 at p. 3; Rinnai, No. 13 at p. 5) A.O. Smith stated that most aspects of the March 2019 ASHRAE Draft 118.2 could be applied to water heaters beyond the scope defined in section 2 of the March 2019 ASHRAE Draft 118.2 with similar characteristics. (A.O. Smith, No. 20 at p. 3) Rheem supported application of the March 2019 ASHRAE Draft 118.2 test method to cover a broader scope, including all water heaters within DOE's definitions of consumer water heaters. However, Rheem commented that modification may be required to address key differences, along with validation testing of any changes. (Rheem, No. 14 at pp. 3)

The April 2021 ASHRAE Draft 118.2 did not propose changes to the scope; therefore, section 2 of the April 2021 ASHRAE Draft 118.2 is the same as the March 2019 ASHRAE Draft 118.2. DOE has tentatively reached a similar conclusion as the commenters that the March 2019 ASHRAE Draft 118.2 and April 2021 ASHRAE Draft 118.2 could be applied to water heaters that are outside of the scope found in section 2 of the March 2019 ASHRAE Draft 118.2 and within the scope of DOE's current consumer water heater test procedure. As noted previously in this section, the March 2019 ASHRAE Draft 118.2 scope limits the maximum rated storage capacity at 120 gallons and the maximum delivery temperature at 180 °F; whereas the scope prescribed by EPCA and the relevant implementing regulations does not include these limits. Further, DOE has found through testing that models with rated storage volumes above 120 gallons or that can deliver water above 180 °F can be tested to DOE's consumer water heater test procedure. Given the similarities between the current DOE test procedure and the March 2019 ASHRAE Draft 118.2 and April 2021 ASHRAE Draft 118.2, such models could also be tested using the ASHRAE test standard. Therefore, DOE has tentatively determined that the test procedure presented in the March 2019 ASHRAE Draft 118.2 and the April 2021 ASHRAE Draft 118.2 could be used to test water heaters outside of the scope presented in section 2 of the March 2019 ASHRAE Draft 118.2.

b. Test Setup

Figures

Section 6 of the March 2019 ASHRAE Draft 118.2 includes new figures that provide greater detail illustrating how to set up a water heater for test. For example, a by-pass (purge) loop is added to the inlet water line in Figures 1 through 8. Additional figures include: A test set-up for a storage water heater with a side inlet water line and top outlet water line; a test set-up for an instantaneous water heater with connections on the top; the placement of a thermal break in the inlet water line (the thermal break is added to the test set-up to prevent heat from traveling up the inlet piping into the by-pass loop section, as discussed in the next subsection); and two configurations for the thermocouple tree if it needs to be installed through the outlet water line.

In the April 2020 RFI, DOE requested feedback on whether the figures in appendix E should be updated to include additional detail, including the detail provided in the figures in the March 2019 ASHRAE Draft 118.2. 85 FR 21104, 21110 (April 16, 2020). If thought to be necessary, DOE asked that commenters address whether the additional specificity provided in the figures could be too restrictive for the purpose of the DOE test procedure, or whether such specificity would be justified by improving reproducibility of test results. *Id.* AHRI, A.O. Smith, CA IOUs, CSA, NEEA, Rheem, and Rinnai recommended that the figures in appendix E be updated to include additional detail in alignment with ASHRAE 118.2. (AHRI, No. 17 at p. 5; A.O. Smith, No. 20 at p. 3; CA IOUS, No. 18 at p. 3; CSA, No. 10 at p. 3; NEEA, No. 21 at p. 6; Rheem, No. 14 at p. 4; Rinnai, No. 13 at p. 5) Rheem stated further that the figures in the March 2019 ASHRAE Draft 118.2 represent test set-up configurations that have been utilized by the AHRI contract laboratories and were also developed through a best practices effort to improve test consistency and repeatability across different labs. (Rheem, No. 14 at p. 4) However, A.O. Smith suggested that any updates to the figures in appendix E be used for reference only and not be required, in order to avoid being overly restrictive. (A.O. Smith, No. 20 at p. 3)

Upon further comparison of the figures within the March 2019 ASHRAE Draft 118.2 and appendix E, DOE found that the location in which the inlet temperature is measured in figures 2A, 2B, and 3 of the March 2019 ASHRAE Draft 118.2 is different than in the corresponding figures 2 and 3 within appendix E. In the March 2019 ASHRAE Draft 118.2, the inlet temperature is measured on the upstream side of the heat trap formed by the U-bend in the required piping, while in appendix E the inlet temperature measurement location is on the downstream side of the U-bend. All figures in the March 2019 ASHRAE Draft 118.2 have the inlet temperature location on the upstream side of the U-bend, while the figures in appendix E vary depending on the type of water heater being tested. Maintaining the same inlet temperature location for all water heater types would simplify the test setup as compared to the current requirements of appendix E. Further, given the short pipe distance between the upstream and downstream side of the U-bend (on the order of a few inches), it is unlikely that changing the location from the downstream side to the upstream side would result in a measurable difference in temperature.

However, DOE does not have adequate test data to fully understand the effect that changing the location of the inlet temperature measurement will have on test results and therefore is not proposing the use of the inlet temperature locations specified in the March 2019 ASHRAE Draft 118.2. DOE welcomes information or data that may demonstrate any impact of inlet temperature measurement location on energy efficiency results.

Thermal Break

Section 6 of the March 2019 ASHRAE Draft 118.2 includes new figures that provide greater detail illustrating how to set up a water heater for test. These additional figures include the installation location of a thermal break in the inlet water line. Figure 9 of the March 2019 ASHRAE Draft 118.2 shows the thermal break installed in greater detail than the other figures and provides more detail on the material properties of the thermal break. The thermal break is added to the test set-up to prevent heat from traveling up the inlet piping into the by-pass loop section. When purging before a draw, any heat that is transferred from the water heater through the inlet piping to the by-pass loop section would be lost, as the by-pass loop is replenished with cold supply water. The thermal break helps to prevent this heat loss.

In the April 2020 RFI, DOE requested feedback on whether a definition of ''thermal break'' [26] should be added to its consumer water heater test procedure. 85 FR 21104, 21110 (April 16, 2020). AHRI, A.O. Smith, BWC, CSA, Keltech, NEEA, Rheem, and Rinnai supported the addition of a definition for ''thermal break'' to the test procedure. (AHRI, No. 17 at p. 5; A.O. Smith, No. 20 at p. 3; BWC, No. 12 at p. 2; CSA, No. 10 at pp. 3; Keltech, No. 7 at p. 1; NEEA, No. 21 at p. 6; Rheem, No. 14 at p. 4; Rinnai, No. 13 at p. 5) However, CEC argued that there is no need to add the definition to the test procedure since the definition can be incorporated by referencing a finalized version of ASHRAE 118.2. (CEC, No. 11 at p. 2)

In the April 2020 RFI, DOE requested feedback on the necessity of a thermal break if no by-pass or purge loop is included in the test set-up. 85 FR 21104, 21110 (April 16, 2020). AHRI, A.O. Smith, and Rinnai stated that a thermal break should be included in the test set-up regardless of whether there is a by-pass or purge loop. (AHRI, No. 17 at p. 5; A.O. Smith, No. 20 at p. 3; Rinnai, No. 13 at p. 5) CSA, NEEA, and Rheem stated that a thermal break is not needed if no by-pass or purge loop is present. (CSA, No. 10 at p. 4; NEEA, No. 21 at p. 6; Rheem, No. 14 at p. 4)

Thermal breaks are not typically installed in the field. Therefore, installation of a thermal break is not representative of an actual installation configuration. The purpose of a thermal break is to minimize unrepresentative effects of other parts of the test setup. A by-pass loop is a method test labs use to ensure inlet water temperatures are within the bounds of the test procedure (*i.e.,* within 58 °F ±2 °F by the first measurement of the draw, which occurs at either 15 or 5 seconds from the start of draw when testing to the first-hour rating or 24-hour simulated-use test, respectively), but its inclusion in the test setup can create a condition whereby a constant low temperature can remove energy from the water heater at a higher rate than would be removed in the field. Heat naturally travels through the inlet piping during standby, and the flow rates and inlet temperatures required by the test procedure do not always counteract this heating of the inlet piping before the required inlet temperature measurements are taken. The addition of a thermal break can help prevent these unrepresentative tank losses due to the by-pass loop by creating a barrier between the highly conductive piping materials. The inclusion of a thermal break in test setups that use a by-pass loop would likely result in test results that are more representative than a test setup with a by-pass loop and no thermal break. However, use of a by-pass loop is not the only possible test setup for meeting the test conditions within appendix E and it is unclear the effect that requiring a thermal break in test setups would have on the results from testing using a setup other than one employing a by-pass loop. Absent such information DOE is not proposing to require the use of a thermal break at this time. Therefore, DOE has tentatively determined that a definition for ''thermal break'' is not necessary to include, and DOE is not proposing one in this NOPR.

In the April 2020 RFI, DOE requested feedback on whether the maximum temperature the thermal break must be able to withstand would appropriately be set at 150 °F, as is set in the March 2019 ASHRAE Draft 118.2. 85 FR 21104, 21110 (April 16, 2020). AHRI, A.O. Smith, BWC, CSA, Rheem, and Rinnai commented that a temperature of at least 150 °F is an appropriate temperature for a thermal break to be able to withstand. (AHRI, No. 17 at p. 5; A.O. Smith, No. 20 at p. 3; BWC, No. 12 at p. 2; CSA, No. 10 at pp. 3–4; Rheem, No. 14 at p. 4; Rinnai, No. 13 at p. 5–6) AHRI and BWC further commented that a thermal break should be made of plastic or another material that is not thermally conductive. (AHRI, No. 17 at p. 5; BWC, No. 12 at p. 2) Keltech stated that thermal breaks should be able to withstand a maximum temperature of at least 200 °F, stating that 150 °F might pose a problem for water heaters capable of producing more than 125 °F. (Keltech, No. 7 at p. 1)

The thermal break is installed on the inlet water line, upstream of the thermocouple measuring the inlet water temperature. DOE examined its test data and found that, when water was not being drawn off, the maximum temperature measured by the thermocouple measuring the inlet water temperature never exceeded 100 °F. Therefore, a thermal break that is installed upstream of the thermocouple measuring the inlet water temperature would not experience water temperatures exceeding 100 °F. However, as stated previously, DOE is not proposing to require the use of a thermal break and, as such, does not need to propose the maximum temperature the thermal break must be able to withstand.

c. First-Hour Rating

Flow Rate

The April 2021 ASHRAE Draft 118.2 indicates that the flow rate for water heaters with rated storage volumes less than 20 gallons would be 1.5 ±0.25 gpm (5.7 ±0.95 L/min). DOE has identified consumer water heaters with storage volumes less than 20 gallons and with input rates near or at the maximum input rate specified at 10 CFR 430.2 (*i.e.,* water heaters with low volume and high input rate). Section 5.3.3, ''First-Hour Rating Test'' of appendix E requires that water heaters with a storage volume less than 20 gallons be tested at 1.0 ±0.25 gallons per minute (gpm) (3.8 ±0.95 liters (L)/minute (min)), as opposed to 3.0 ±0.25 gpm (11.4 ±0.95 L/min) required for water heaters with rated storage volumes greater than or equal to 20 gallons. Water heaters with low volume and high input rates can potentially operate indefinitely at the 3.0 ±0.25 gpm (11.4 ±0.95 L/min) flow rate. When tested as currently required by appendix E, such products would have a measured FHR around 60 gallons (227 L) and, therefore, would be required to use the medium draw pattern, although such models could be

[26] A ''thermal break'' is defined in the March 2019 ASHRAE Draft 118.2 as a nipple made of material that has thermal insulation properties (*e.g.,* plastics) to insulate the by-pass loop from the inlet piping. It should be able to withstand a pressure of 150 psi and a temperature of 150 °F.

used in applications similar to water heaters that are required to test using the high draw pattern (*e.g.,* flow-activated instantaneous water heaters with high input rates and storage water heaters with greater than 20 gallons stored water and high input rates and/or volumes). As such, the current method of testing these products may not best represent how they are used in the field.

In the April 2020 RFI, DOE requested feedback on the consumer water heater test procedure with respect to testing the delivery capacity of non-flow activated water heaters with low volume and high input rate. 85 FR 21104, 21114 (April 16, 2020). If amendments were thought to be warranted, DOE requested comment on what method(s) would be appropriate for determining the delivery capacity of such models and what attributes can be used to distinguish these water heaters from non-flow activated water heaters more appropriately tested by the FHR test. *Id.* Rheem stated that there is a need to update the test procedure for testing delivery capacity of non-flow activated water heaters with low volume and high input rate. (Rheem, No. 14 at p. 9) DOE submitted a comment on this issue to the March 2019 ASHRAE Draft 118.2, and a solution was proposed in the April 2021 ASHRAE Draft 118.2 in which the flow rate for water heaters with rated storage volumes less than 20 gallons would be 1.5 ±0.25 gpm (5.7 ±0.95 L/min) instead of the 1.0 ±0.25 gpm (3.8 ±0.95 L/min) currently specified in the consumer water heater test procedure. This change would allow a water heater that can run continuously (*i.e.,* low volume and high input rate) to have a FHR that would correspond to the high draw pattern. Further, lower capacity water heaters would not be able to continuously deliver hot water at 1.5 gpm, which would result in them continuing to be rated in a lower draw pattern.

DOE tested three electric storage water heaters with rated storage volumes below 20 gallons to the current DOE FHR test (*i.e.,* 1.0 ±0.25 gpm (3.8 ±0.95 L/min)) and a FHR test at a flow rate of 1.5 ±0.25 gpm (5.7 ±0.95 L/min). All three electric storage water heaters are rated in the very small draw pattern (*i.e.,* they have low input rates). The three electric storage water heaters were tested 4 times to each version of the FHR test (*i.e.,* 8 tests per unit and 24 tests total). The results of the tests are shown in Table III.1.

TABLE III.1—AVERAGE FIRST-HOUR RATING BASED ON A FLOW RATE OF 1.0 gpm AND 1.5 gpm

Unit No.	Average FHR at 1.0 gpm (3.8 L/min) (gallons)	Average FHR at 1.5 gpm (5.7 L/min) (gallons)	Change (%)
1	7.3	7.5	+3.4
2	6.4	6.2	−2.2
3	6.9	7.2	+4.7

As shown in Table III.1, changing the flow rate from 1.0 gpm to 1.5 gpm resulted in an average change in FHR between −2.2 percent and +4.7 percent. As the FHR rating did not increase above 10 gallons (*i.e.,* the threshold for determining whether to test to the very small or low draw patterns during the 24-hour simulated-use test) when tested at 1.5 gpm, the water heaters would continue to be tested to the very small draw pattern when tested to the 24-hour simulated-use test.

Based on the testing of the three models, changing the flow rate during the FHR test for water heaters with a rated storage volume less than 20 gallons from 1.0 ±0.25 gpm (3.8 ±0.95 L/min) to 1.5 ±0.25 gpm (5.7 ±0.95 L/min) would have a relatively minimal impact on the FHR for water heaters with low input rates, and the resultant FHR and associated draw pattern for the 24-hour simulated-use test would still be representative of the expected use in the field. However, for water heaters with high input rates the change in flow rate could significantly increase the FHR and result in some models being tested and rated for UEF using a higher draw pattern, which would provide ratings that are more representative of their actual use. For these reasons, DOE is proposing to change the flow rate during the FHR test for water heaters with a rated storage volume less than 20 gallons from 1.0 ±0.25 gpm (3.8 ±0.95 L/min) to 1.5 ±0.25 gpm (5.7 ±0.95 L/min). This proposed change is also consistent with the April 2021 ASHRAE Draft 118.2, and, in development of the final rule, DOE will consider the flow rate as finalized in the update to ASHRAE 118.2.

Initiation Criteria

The April 2021 ASHRAE Draft 118.2 includes additional criteria defining the start of the FHR test, as compared to DOE's test procedure. Section 5.3.3.3 of appendix E of the current DOE test procedure states that prior to the start of the FHR test, if the water heater is not operating (*i.e.,* heating water), initiate a draw until cut-in [27] (*i.e.,* when the water heater begins heating water). The draw is then terminated any time after cut-in, and the water heater is operated until cut-out.[28] Once the maximum mean tank temperature is observed after cut-out, the initial draw of the FHR test begins. Section 7.3.3.3 of the April 2021 ASHRAE Draft 118.2 specifies that the draw preceding the initial draw of the FHR test must proceed until the outlet temperature drops 15 °F below the maximum outlet temperature observed, or until the draw time limit [29] is reached. If the draw time limit is reached before the outlet temperature drops 15 °F below the maximum outlet temperature observed, then the main heating source of the water heater is shut off and the draw is continued until the outlet temperature has dropped 15 °F below the maximum outlet temperature. Requiring the outlet temperature to drop 15 °F below the maximum outlet temperature may provide a more consistent starting condition for the FHR test compared to the pre-conditioning method specified in the current DOE test procedure because draws of varying lengths can create different internal tank temperature profiles. Thus, the additional requirement to tie the length

[27] ''Cut-in'' is defined in section 1 of appendix E as ''the time when or water temperature at which a water heater control or thermostat acts to increase the energy or fuel input to the heating elements, compressor, or burner.''

[28] ''Cut-out'' is defined in section 1 of appendix E as ''the time when or water temperature at which a water heater control or thermostat acts to reduce to a minimum the energy or fuel input to the heating elements, compressor, or burner.''

[29] The draw time limit is the rated storage capacity divided by the flow rate times 1.2 (*i.e.,* for a 75-gallon water heater the draw time limit would be 30 minutes, or 75 gallons divided by 3 gpm times 1.2).

of the initial draw to a specific outlet temperature, which in some cases would extend the draw length as compared to the current DOE test procedure, could increase the repeatability of the FHR test.

The March 2019 ASHRAE Draft 118.2 specified two criteria for terminating the water draw prior to the start of the FHR test: A 15 °F drop in outlet temperature from the maximum outlet temperature observed and a cut-in. The draft requirement for a cut-in was replaced with the draw time limit in the April 2021 ASHRAE Draft 118.2.

In the April 2020 RFI, DOE requested feedback on whether the addition of an outlet temperature drop criterion for terminating the water draw prior to the start of the FHR test within the March 2019 ASHRAE Draft 118.2 is appropriate and/or necessary. 85 FR 21104, 21109 (April 16, 2020). If an outlet temperature drop criterion is appropriate, DOE requested comment and data on whether 15 °F is sufficiently representative, given consumer expectation, or whether a different threshold should be considered. *Id.* DOE also requested information on any potential impact to the testing burden that would result from an outlet temperature drop criterion. *Id.* Further, DOE requested comment on how to address water heaters that would not meet both initiation criteria (*i.e.,* both a cut-in and an outlet temperature drop) due to the ability to continuously deliver hot water at the prescribed test conditions. *Id.* AHRI generally agreed that the 15 °F drop is sufficiently representative. However, AHRI stated there are oil-fired water heaters available that cannot achieve this temperature drop. AHRI recommended that additional review and testing be done to determine how to address water heaters that would not meet both initiation criteria (*i.e.,* the 15 °F drop in outlet water temperature and a cut-in). (AHRI, No. 17 at p. 4) A.O. Smith, BWC, NEEA, Keltech, Rheem, and Rinnai agreed with AHRI's statements. (A.O. Smith, No. 20 at p. 2; BWC, No. 12 at p. 3; Keltech, No. 7 at p. 1; NEEA, No. 21 at p. 5; Rheem, No. 14 at p. 2; Rinnai, No. 13 at p. 3) CSA stated that it is part of a working group for ASHRAE Draft 118.2 to address this issue. (CSA, No. 10 at p. 2) NEEA stated that for water heaters with enough output capacity to never drop 15 °F, the FHR test is not necessary, and the water heater should be tested to the Max GPM test, even if the water heater is not technically flow-activated. (NEEA, No. 21 at p. 5)

The combination of the 15 °F drop in outlet water temperature and the draw time limit criteria to the start of the FHR test would provide a more repeatable pre-FHR draw, as the criteria to end the draw would be explicitly stated (in contrast to the current test procedure, which allows for any length of pre-FHR test draw, as long as a cut-in occurs before the end of the draw). Because the pre-FHR test draw would be more repeatable, the available energy content of the tank at the start of the FHR test would be more consistent among different test runs. In both the current DOE test procedure and the procedure in the April 2021 ASHRAE Draft 118.2, the FHR test is initiated after a cut-out from the recovery that occurs due to the pre-FHR test draw. Therefore, in both cases, the water heater can be considered ''fully heated'' and to have similar internal energy content, although differences may be present due to the internal water temperature gradient throughout the tank. However, it is unclear how these differences in internal tank temperature will affect the test results. Absent information as to the impact of the differences in internal tank temperature on the test results, DOE is not proposing to amend appendix E to include the pre-FHR test conditioning proposed in the April 2021 ASHRAE Draft 118.2.

Additionally, in the April 2020 RFI, DOE raised concerns over high input rate water heaters that can heat water quicker than it is being drawn off. 85 FR 21104, 21113–21114 (April 16, 2020). The solution [30] presented in the April 2021 ASHRAE Draft 118.2 was the addition of a draw time limit, which eliminates the chances of an indefinite water draw. The procedure currently in appendix E [31] also would not allow an indefinite draw and, as stated previously, it is unclear the effect the draw time limit proposal would have on test results. Therefore, DOE is not proposing to include the draw time limit within appendix E.

DOE agrees in principle with NEEA that the Max GPM test may provide a representative value of delivery capacity and could be used to determine the appropriate draw pattern of a water heater with a sufficiently high input rate and low storage volume, despite not being flow-activated. However, it is unclear at this time how these types of non-flow activated water heaters could be separated from other non-flow activated water heaters that are appropriately tested with the FHR test and would be inappropriately tested with the Max GPM test.

Minimum Outlet Temperature

Section 7.3.3.3 of the March 2019 ASHRAE Draft 118.2 and section 7.3.3.4 of the April 2021 ASHRAE Draft 118.2 include additional criteria regarding water draws during the FHR test, as compared to the current DOE test procedure. The FHR test required in section 5.3.3 of appendix E specifies a series of water draws over the course of one hour. After each water draw is initiated, the draw is terminated when the outlet water temperature decreases 15 °F from the maximum outlet water temperature measured during the draw. For example, if after initiating a water draw, the outlet water temperature reaches a maximum temperature of 125 °F, the water draw would continue until the outlet water temperature drops to 110 °F, at which time the water draw would be terminated. Section 7.3.3.4 of the April 2021 ASHRAE Draft 118.2 specifies that water draws during the FHR test terminate if either: (1) The outlet water temperature decreases 15 °F from the maximum outlet water temperature measured during the draw, or (2) the outlet water temperature decreases to 105 °F, regardless of the maximum outlet water temperature measured during the draw. Setting a minimum temperature threshold of 105 °F would reflect that in practice because consumers would likely stop drawing water when it gets below 105 °F, as the water would no longer be considered ''hot.''

In the April 2020 RFI, DOE requested feedback on whether the addition of a minimum outlet temperature as a criterion for terminating draws during the FHR test is appropriate and/or necessary. 85 FR 21104, 21109 (April 16, 2020). If a minimum outlet temperature criterion is appropriate, DOE requested comment and data on whether 105 °F would be sufficiently representative given consumer expectation, or whether a different threshold should be considered. *Id.* DOE also requested information on any potential impact this minimum outlet temperature may have on testing burden. *Id.* BWC and NEEA supported the minimum outlet temperature of 105 °F for terminating draws of the FHR test. (BWC, No. 12 at p. 2; NEEA, No. 21 at p. 5) Rheem supported a minimum outlet temperature, but suggested a 100 °F limit would be more appropriate and would better represent usable hot water temperatures, especially when considering electric water heaters used for point-of-use, such as handwashing applications. (Rheem, No. 14 at p. 3)

[30] The draw time limit solution was the result of the working group in which CSA stated it was a part of. (CSA, No. 10 at p. 2)

[31] Appendix E requires that the pre-FHR test draw be terminated after the water heater initiates a recovery.

AHRI and Rinnai stated that a 15 °F drop in outlet temperature or 105 °F minimum outlet temperature, whichever is higher, would be sufficiently representative. (AHRI, No. 17 at p. 4; Rinnai, No. 13 at p. 4) A.O. Smith and Rheem suggested more testing and investigation are necessary before any decisions are made. (A.O. Smith, No. 20 at p. 2; Rheem, No. 14 at p. 3) CSA stated that, when testing to the March 2019 ASHRAE Draft 118.2, all draws would be terminated at 105 °F regardless of outlet temperature, but stated that this can potentially create a bias for conducting the procedure at the higher end of 125 ±5 °F tolerance. CSA further stated that some water heaters start stacking [32] after the first draw, resulting in the outlet temperature going above 130 °F during the FHR test, and questioned how that would affect the overall FHR and draw pattern bin. (CSA, No. 10 at p. 2)

Based on a review of existing test data, the 105 °F outlet temperature criteria would affect only a small number of tests, if any. The test currently requires that the draw be terminated after a 15 °F drop in outlet temperature, and the outlet temperature is required to be between 120 °F and 130 °F when setting the thermostat. Therefore, the outlet temperature is unlikely to be below 105 °F during the test, as most draws should terminate before that point. The maximum outlet temperature of the draw would have to be below 120 °F for the 105 °F criteria to be triggered. As a result, DOE understands CSA's comment that all draws will be terminated at 105 °F, if tested to ASHRAE Draft 118.2, to be incorrect. Section 7.3.3.4 of the April 2021 ASHRAE Draft 118.2 includes a statement that requires the draw be terminated at 105 °F or when the outlet temperature is 15 °F below the maximum outlet temperature measured during the draw, ''whichever is higher.'' Therefore, if the maximum outlet temperature of a draw was 125 °F, for example, then the draw would end after a 15 °F drop, or once the outlet water temperature is 110 °F, which is higher than 105 °F. Also, Rheem's suggestion of a 100 °F limit to address handwashing water heaters would not be appropriate for water heaters generally and would be more appropriately addressed as part of development of a method to appropriately test such water heaters (*see* section III.C.7). DOE is not proposing to add the 105 °F minimum outlet temperature criteria to the FHR test draw termination criteria, as further test data is needed to assess the effect on the FHR test results.

Scaling of the Last Draw Volume

Section 5.3.3.3 of appendix E includes a provision for the FHR test requiring that if the final draw is not initiated prior to one hour from the start of the test, then a final draw is imposed at the elapsed time of one hour. In this situation, calculations presented in section 6.1 of appendix E are used to determine the volume drawn during the final draw for purposes of calculating FHR. The volume of the final draw is scaled based on the temperature of the water delivered during the final draw as compared to the temperature of the water delivered during the previous draw. The calculated final draw volume is added to the total volume drawn during the prior draws to determine the FHR. The April 2021 ASHRAE Draft 118.2 does not include a final draw volume scaling calculation for the case in which a draw is not in progress at one hour from the start of the test and a final draw is imposed at the elapsed time of one hour. Instead, the April 2021 ASHRAE Draft 118.2 method calculates FHR as the sum of the volume of hot water delivered without any scaling of the final draw.

The methodology for conducting the FHR test, and in particular the issue of whether to scale the final draw, was considered by DOE in a final rule that was published on May 11, 1998 (May 1998 final rule). In the May 1998 final rule, DOE determined that scaling the final draw volume based on the outlet water temperature was appropriate and was included to adjust the volume of the last draw to account for the lower heat content of the last draw compared to the earlier draws with fully heated water. 63 FR 25996, 26004–26005 (May 11, 1998).

In the April 2020 RFI, DOE requested comment on whether the scaling of final draw volume should be maintained as part of the FHR calculation, in the case that a draw is not initiated prior to one hour from the start of the test but is imposed at that time before the water has been heated to the specified temperature to initiate the draw. 85 FR 21104, 21111 (April 16, 2020). DOE further requested feedback on the effect that removing the scaling of the final draw volume would have on the rated FHR, draw pattern, and rated UEF values of the various types of non-flow activated water heaters that are tested to the FHR test. *Id.* In response, AHRI, A.O. Smith, BWC, Rheem, Rinnai, and SMTI suggested that DOE remove the final draw volume scaling calculation, which would be consistent with the March 2019 ASHRAE Draft 118.2. (AHRI, No. 17 at p. 6; A.O. Smith, No. 20 at p. 3; BWC, No. 12 at p. 3; Rheem, No. 14 at p. 5; Rinnai, No. 13 at p. 6; SMTI, No. 19 at p. 3) AHRI, A.O. Smith, Rinnai, and Rheem further stated that removing the final draw volume scaling would have minimal impact on the rated FHR, draw pattern, and rated UEF values. (AHRI, No. 17 at p. 6; A.O. Smith, No. 20 at p. 3; Rinnai, No. 13 at p. 6; Rheem, No. 14 at p. 5) CSA stated that the current final draw volume scaling method should be maintained and that a water heater delivering water at 106 °F should not be equal to a water heater delivering water at 110 °F. According to CSA, the outlet water temperatures would most likely be tempered by the end user, and the water heater delivering 110 °F water would supply more tempered water than a water heater delivering 106 °F, even though the volume of the last draw, as measured, would be roughly the same. CSA stated further that removing the scaling of the final draw volume could possibly move water heaters to the next highest draw pattern. (CSA, No. 10 at p. 5)

The scaling of the final draw accounts for the possible lower heat content of the last draw as compared to earlier draws. The test procedure specifies a constant flow rate throughout testing. The flow rate is fixed, and, as water is drawn, the water temperature decreases. In practice, water used by the consumer is typically at a lower temperature than is delivered by the water heater (*i.e.,* water drawn from the water heater is mixed with water from the cold tap). The flow rate of water delivered to the consumer by a faucet or showerhead is fixed by the faucet or showerhead. As the heat content of the water delivered by the water heater decreases, the flow rate of water from the water heater is increased to maintain the temperature of the mixed water delivered by the faucet

[32] ''Stacking'' refers to when a storage water heater has hot water within the storage tank that is well above the temperature that is typically stored, which can result from successive short duration draws in a short amount of time. During typical operation, a draw removes hot water from the top of the storage tank, and the removed water is replaced with cold water that enters near the bottom the tank. The thermostat that controls the burner or element operation is also located near the bottom of the tank. Repeated short-duration draws result in multiple ''bursts'' of cold water entering the bottom of the tank; however, because the draws are short-duration, the total amount of water drawn is relatively small, and the temperature at the top of the tank may remain ''hot'' at the target setpoint. These short bursts of cold water entering near the thermostat may trigger a cut-in, and the water heater will begin heating despite the temperature at the top of the tank still being hot at the target setpoint. As the already-hot tank is being heated further, the temperature within the tank increases above the temperature that the water heater typical operates.

or showerhead (*i.e.,* in practice, as water temperature decreases, the flow rate of water from the water heater is increased). Thus, DOE has tentatively determined that scaling the final draw volume based on outlet temperature is more representative of the actual use in the field.

Further, removing the scaling of the final draw volume would result in many FHR values having to be recertified as many models have the final draw imposed at the one-hour mark (only those models that initiated their final draw prior to 1 hour would not be affected). Because the change is to the calculation of FHR only, retesting would not be needed unless the resulting FHR value required a new 24-hour simulated-use test due to a change in the applicable draw pattern bin (*e.g.,* if the FHR increases such that a model moves from the medium to the high draw pattern). DOE agrees with commenters that most models would not require a new 24-hour simulated-use test. However, any retesting would be a burden on manufacturers and, as stated previously, removing the scaling provisions would result in a less representative test.

Removing or amending the scaling of the final draw volume would change the FHR value, which could change the required draw pattern to use for the simulated-use test, as defined in section 5.4.1 of appendix E. The current draw pattern thresholds were determined based on the current final draw scaling methodology, and are therefore representative of actual use only when used with FHR values based on the current final draw scaling methodology. Removing or amending the scaling of the final draw volume could require adjusting the draw pattern thresholds to ensure that the applicable draw patterns (based on FHR value thresholds) remain representative of actual use.

The FHR metric is a method to compare the amount of usable water that a water heater can produce in a given amount of time. As long as the metric is applied consistently throughout the market, the consumer can use it to make comparisons among different models. Removing the scaling of the final draw volume may increase test burden on some manufacturers while resulting in a less representative test, and could require an update to the draw pattern thresholds. As described, changes to the draw pattern threshold could result in water heaters being classified in a lower draw pattern than they are currently, and it is uncertain as to the extent the reclassification would result in a test procedure that is representative for such models. Therefore, DOE has tentatively determined not to remove or amend the scaling of the final draw volume.

In response to the April 2020 RFI, SMTI stated that, if the scaling of the final draw volume was maintained, the equation should be amended to use the inlet water temperature as opposed to the minimum outlet temperature of the previous draw. According to SMTI, this change would make the overall calculation more representative of the energy availability in the final draw. (SMTI, No. 19 at p. 3–4) However, while basing the scaling calculation on inlet water temperature as opposed to outlet water temperature would be more representative of the energy availability in the tank, it would not be more representative of the energy availability in the final draw. The energy that is useful to the consumer is based on the energy of water delivered at a temperature at or above the consumer's desired temperature. The consumer's desired temperature is approximated in the FHR test by the minimum delivery temperature of the draw and not the inlet water temperature. Therefore, DOE has tentatively determined that scaling the final draw volume based on the inlet water temperature would result in a less representative test and a metric that could mislead the consumer as to how much hot water they actually have available. Further, the change suggested by SMTI to base the scaling of the final draw volume on inlet water temperature would result in a FHR value that is higher than under the current DOE test procedure, but to a lesser degree than if the temperature scaling were removed. As stated, DOE has tentatively determined that amending scaling of the final draw volume to use the inlet water temperature as opposed to the minimum outlet water temperature would result in a less representative test and, therefore, DOE is not proposing this change.

d. 24-Hour Simulated-Use Test

Initiation Criteria

Similar to the initiation criteria discussed in section III.B.2.c for the FHR test, section 7.4.2 of the April 2021 ASHRAE Draft 118.2 includes criteria for a pre-24-hour simulated-use test draw, which ends after either the outlet temperature drops by 15 °F or the draw time limit is reached. Section 5.4.2 of appendix E currently requires that the water heater sit idle for 1 hour prior to the start of the 24-hour simulated-use test; during which time no water is drawn from the unit and no energy is input to the main heating elements, heat pump compressor, and/or burners. Appendix E provides no instruction on how to condition the tank prior to this one hour. However, as discussed in section III.B.2.c, it is unclear how the outlet temperature drop criteria and the draw time limit will affect the internal tank temperature at the start of the 24-hour simulated-use test and how this difference in internal tank temperatures will affect the test results. Therefore, DOE is not proposing to amend appendix E to include the preconditioning proposed in the April 2021 ASHRAE Draft 118.2. DOE welcomes data that provide information regarding the impact of the preconditioning provisions in the April 2021 ASHRAE Draft 118.2 on the UEF result.

Recovery Efficiency

Section 8.3.2 of the March 2019 ASHRAE Draft 118.2 includes language specifying that, when the first recovery of the 24-hour simulated-use test ends during a draw, the first recovery period extends until the end of that draw. The first recovery period is used in section 8.3.2 of the March 2019 ASHRAE Draft 118.2 and section 6.3.2 of appendix E to calculate recovery efficiency. DOE's test procedure does not explicitly address how to calculate recovery efficiency if the first recovery period ends during a draw. A recovery period is defined in section 1 of appendix E as ''the time when the main burner of a storage water heater is raising the temperature of the stored water.'' Each of the parameters in the recovery efficiency equation are recorded from the ''beginning of the test to the end of the first recovery period following the first draw.'' The DOE test procedure does not explicitly state whether values are recorded at the end of the recovery period that ends after the initiation of the first draw, or at the end of a recovery period that occurs after the end of the first draw.

In the April 2020 RFI, DOE requested feedback on whether additional specification should be added to appendix E addressing the first recovery period ending during a draw. 85 FR 21104, 21111 (April 16, 2020). DOE further requested that if extending the first recovery period to the end of the draw is thought to be appropriate, whether the test procedure should also address the situation where a second recovery is initiated prior to the ending of the draw. *Id.* DOE also requested how to appropriately find the maximum mean tank temperature after cut-out following the recovery period. *Id.* AHRI, A.O. Smith, CSA, Rheem, and Rinnai generally supported adding a specification in appendix E to address the first recovery period ending during a draw. (AHRI, No. 17 at p. 7; A.O.

Smith, No. 20 at p. 3; CSA, No. 10 at p. 5; Rheem, No. 14 at p. 5; Rinnai, No. 13 at p. 7) AHRI, A.O. Smith, Rheem, and Rinnai supported extending the first recovery period to the end of the draw to include all water heater activity up to and including the end of the draw. (AHRI, No. 17 at p. 7; A.O. Smith, No. 20 at p. 3; Rheem, No. 14 at p. 5; Rinnai, No. 13 at p. 7) AHRI and Rheem recommended that the maximum mean tank temperature just after the first cut-out be used. (AHRI, No. 17 at p. 7; Rheem, No. 14 at p. 5) CSA recommended that for the other scenarios outlined by DOE, testing should be conducted to determine the proper procedure. (CSA, No. 10 at p. 5) No comments were received directly addressing the issue of when a second recovery starts prior to the end of the draw in which the first recovery ended.

The situation in which a recovery ends during a draw likely occurs during draws with a low enough flow rate that the water heater can heat water more quickly than the draw is removing. The energy used for the recovery efficiency calculation includes energy used to heat water and auxiliary energy; therefore, the energy associated with the first recovery period should represent the entire draw to capture all energy use. Commenters generally agreed that the maximum mean tank temperature measured after the recovery should be right after cut-out (*i.e.,* in the middle of the draw). After cut-out, as the draw continues, the mean tank temperature will drop as heated water is replaced by cold inlet water; therefore, the mean tank temperature immediately after cut-out will be the maximum observed. As such, DOE proposes to explicitly provide that when the first recovery ends during a draw, the first recovery period is extended to the end of the draw and the mean tank temperature measured immediately after cut-out is used as the maximum mean tank temperature value in the recovery efficiency calculation.

On January 31, 2020, DOE published a Notice of Decision and Order [33] (Decision and Order) by which a test procedure waiver for certain basic models was granted to address the issue of a second recovery initiating during the draw during which the first recovery ended. 85 FR 5648. The Decision and Order prescribes an alternate test procedure that extends the first recovery period to include both the first and second recoveries. *Id.* at 85 FR 5652. In the context of the Decision and Order, DOE determined that the consideration of delivered water mass and inlet and outlet temperatures until the end of the draw is appropriately representative, and, therefore, the entire energy used from both recoveries is included. *Id.* at 85 FR 5651–5652.

In the April 2020 RFI, DOE requested feedback on whether the equation for recovery efficiency for water heaters with a rated storage volume greater than or equal to 2 gallons (7.6 L) should be updated to address when the recovery period lasts for more than one draw. 85 FR 21104, 21111 (April 16, 2020). CSA, EEI, NEEA, Rheem, and Rinnai recommended that DOE update the recovery efficiency calculation to account for the period extending beyond one draw to increase clarity. (CSA, No. 10 at p. 5; EEI, No. 8 at p. 4; NEEA, No. 21 at p. 6; Rheem, No. 14 at p. 6; Rinnai, No. 13 at p. 7) This change was presented in the March 2019 ASHRAE Draft 118.2 and is in the Notice of Decision and Order. 85 FR 5648, 5652 (Jan. 31, 2020). Consistent with the published Notice of Decision and Order and as supported by commenters, DOE proposes to update the recovery efficiency equation to specify accounting for the mass of water drawn for all draws initiated during the recovery period. As such, DOE is proposing to amend appendix E consistent with the alternate test procedure in the Decision and Order.

Standby Period

Appendix E includes a standby [34] period measured between the first and second draw clusters,[35] during which data is recorded that is used to calculate the standby heat loss coefficient. See section 5.4.2 of appendix E. Sections 7.4.2.1 and 7.4.2.2 of the March 2019 ASHRAE Draft 118.2 and sections 7.4.3.1 and 7.4.3.2 of the April 2021 ASHRAE Draft 118.2 add a condition that the standby period data can be recorded between the first and second draw clusters only if the time between the observed maximum mean tank temperatures after cut-out following the first draw cluster to the start of the second draw cluster is greater than or equal to 6 hours. Otherwise, the standby period data would be recorded after the last draw of the test. This condition would provide a sufficiently long standby period to determine standby loss, which might make this calculation more repeatable and the results more representative of standby losses experienced in an average period of use. However, this might also cause the test to extend beyond a 24-hour duration.

In the April 2020 RFI, DOE requested feedback on whether it should consider the addition of a minimum standby period length of 6 hours for use in the standby loss calculations, and on the appropriateness of recording this data after the final draw cluster when less than 6 hours of standby time occur between the first and second draw clusters. 85 FR 21104, 21110 (April 16, 2020). BWC stated that DOE should adopt a minimum standby period length of 6 hours for use in the standby loss calculation. (BWC, No. 12 at p. 3) NEEA stated that DOE should reduce the standby period to 4 hours, as it believed the increased burden to require a 6-hour standby period would be unwarranted. (NEEA, No. 21 at p. 4) AHRI and Rheem stated they do not support the addition of a minimum standby period length of 6 hours because it would extend the total test period time to over 24 hours. (AHRI, No. 17 at p. 6; Rheem, No. 14 at p. 4) A.O. Smith stated that adding 6 hours to the test would be significant and recommended that DOE investigate whether the addition is truly necessary, or if a less burdensome method could achieve the same goal. (A.O. Smith, No. 20 at p. 3) CSA referenced its test data, which included units with a standby period ranging from 5 minutes to over 7 hours, to demonstrate that standby time has very little effect on the overall UEF value. (CSA, No. 10 at p. 4)

The standby heat loss coefficient (*i.e.,* UA) is calculated from data recorded during the standby period. DOE reviewed its available test data and found that for the models reviewed, UA has very little effect on UEF, which is consistent with CSA's comment. UA is used only to adjust the daily water heating energy consumption to the nominal ambient temperature of 67.5 °F (19.7 °C). Given that the ambient temperature range is relatively narrow (*i.e.,* 65 °F to 70 °F (18.3 °C to 21.1 °C)), the adjustment has only a minimal impact on the daily water heating energy consumption. Further, DOE found that the length of the recovery period has little effect on the resulting UA value. Therefore, DOE has tentatively determined that requiring a 6-hour standby period would not affect UA and UEF enough to justify the increased test burden associated with a

[33] Notice of Decision and Order in response to BWC petition for waiver is available at: *www.regulations.gov/document?D=EERE-2019-BT-WAV-0020-0008.*

[34] ''Standby'' is defined in section 1.12 of appendix E as ''the time, in hours, during which water is not being withdrawn from the water heater.''

[35] A ''draw cluster'' is defined in section 1 of appendix E as ''a collection of water draws initiated during the 24-hour simulated-use test during which no successive draws are separated by more than 2 hours.'' There are two draw clusters in the very small draw pattern and three draw clusters in the low, medium, and high draw patterns.

test that already could last longer than 24 hours.

Last Hour

In the April 2020 RFI, DOE requested feedback on whether it should consider an alternate procedure, like that in section 7.4.2.2 of the March 2019 ASHRAE Draft 118.2 (and section 7.4.3.2 of the April 2021 ASHRAE Draft 118.2), for the last hour of the 24-hour simulated-use test. 85 FR 21104, 21111 (April 16, 2020). DOE further requested feedback on whether the addition of standby loss in the total energy use calculation adequately represents the auxiliary energy use that is not measured between the minute prior to the start of the recovery occurring between hours 23 and 24, and hour 24 of the 24-hour simulated-use test. *Id.*

CSA requested that DOE revisit the procedure for the last hour of the 24-hour simulated-use test. CSA raised a number of questions with how the test procedure in section 5.4.2, *Test Sequence for Water Heaters with Rated Storage Volumes Greater Than or Equal to 2 Gallons,* is implemented, specifically with regard to when power is to be turned off and on. (CSA, No. 10 at p. 4)

Although not stated explicitly in section 5.4.2 of appendix E, in the case that the standby period is between the first and second draw clusters, power to the main burner, heating element, or compressor is disabled during the last hour of the 24-hour simulated-use test. In the case that the standby period is after the last draw of the 24-hour simulated-use test, power to the main burner, heating element, or compressor is not disabled.

Section 5.4.2 of appendix E states that during the last hour of the 24-hour simulated-use test, power to the main burner, heating element, or compressor shall be disabled; at 24 hours, record the reading given by the gas meter, oil meter, and/or the electrical energy meter as appropriate; and determine the fossil fuel and/or electrical energy consumed during the entire 24-hour simulated-use test and designate the quantity as Q.

Section 5.4.2 of appendix E also provides that in the case that the standby period is after the last draw of the 24-hour simulated-use test, an 8-hour standby period is required, and this period may extend past hour 24. The procedures for the standby period after the last draw of the 24-hour simulated-use test allow for a recovery to occur at the end of the 8-hour standby period, which indicates that the power to the main burner, heating element, or compressor is not disabled. DOE's procedure as described may result in some confusion. Further, the method of determining the total energy use during the 24-hour simulated-use test, Q, and total test time are not explicitly stated for when a standby period occurs after the last draw of the 24-hour simulated-use test. As discussed in the following paragraphs, DOE is proposing to amend the procedures for the last hour of the 24-hour simulated-use test to explain how to end the test for both standby period scenarios.

CSA and NEEA stated that DOE should adopt the March 2019 ASHRAE Draft 118.2 approach. (CSA, No. 10 at p. 4; NEEA, No. 21 at p. 6)

In the March 2019 ASHRAE Draft 118.2 and April 2021 ASHRAE Draft 118.2, power is not disabled when the standby period occurs after the last draw of the test. But, if a recovery occurs between an elapsed time of 23 hours following the start of the test (hour 23) and 24 hours following the start of the test (hour 24), the following alternate approach is applied to determine the energy consumed during the 24-hour simulated-use test: The time, total energy used, and mean tank temperature are recorded at 1 minute prior to the start of the recovery occurring between hour 23 and hour 24, along with the average ambient temperature from 1 minute prior to the start of the recovery occurring between hour 23 and hour 24 to hour 24 of the 24-hour simulated-use test. These values are used to determine the total energy used by the water heater during the 24-hour simulated-use test. This alternate calculation combines the total energy used 1 minute prior to the start of the recovery occurring between hours 23 and 24 and the standby loss experienced by the tank during the time between the minute prior to the recovery start and hour 24. This provision in section 7.4.2.2 of the March 2019 ASHRAE Draft 118.2 and section 7.4.3.2 of the April 2021 ASHRAE Draft 118.2 does not require the water heater to be de-energized during the standby period. Disabling power to the water heater is typically a manual operation that requires the presence of a technician. In cases where the technician does not disable power at the correct time, a retest of the 24-hour simulated-use test may be necessary. To the extent this draft provision would eliminate the need to ensure that a unit is switched off for the last hour of the 24-hour simulated-use test, it could reduce test burden.

In response to the April 2020 RFI, CSA further stated that not including the pilot energy does not adequately represent auxiliary energy usage for water heaters with continuously burning pilot lights. (CSA, No. 10 at p. 5) DOE notes that in the last hour of the 24-hour simulated-use test, the power to the main burner is disabled. In practice, cutting off the gas flow to the main burner disables the pilot light as well. However, disabling power to the main burner could also be accomplished by reducing the thermostat setting to the minimum setting available, which would result in the water heater under test not initiating a recovery during the last hour and gas continuing to be supplied to the pilot light. Reducing the thermostat setting would be a manual operation performed by a technician, not an automated action, which increases the chances of an invalid test. CSA also stated that water heaters without standing pilots will have minimal energy consumption in the last hour compared to the overall energy consumption, and that the total energy use calculation adequately represents the auxiliary energy use for these water heaters. *Id.* AHRI and A.O. Smith stated that they are in the process of evaluating the March 2019 ASHRAE Draft 118.2 test procedure for the last hour of the 24-hour simulated-use test and will provide additional information after their evaluation is completed. (AHRI, No. 17 at p. 6; A.O. Smith, No. 20 at p. 3) Rheem stated that given the limited time for evaluation and testing of an alternate procedure, the current procedure for the last hour of the 24-hour simulated-use test in appendix E should be maintained. (Rheem, No. 14 at p. 5)

At this time, DOE has not been provided with the additional information from AHRI or A.O. Smith regarding the procedure for the last hour of the 24-hour simulated-use test, and agrees with Rheem that further evaluation of the alternate procedure presented in the March 2019 ASHRAE Draft 118.2 and April 2021 ASHRAE Draft 118.2 should be conducted before a determination is made. As stated previously, the procedure for the last hour of the 24-hour simulated-use test may benefit from further, more explicit instruction, and DOE proposes to explicitly state how to end the test depending on whether the standby period is between draw clusters 1 and 2 or after the last draw of the test.

C. Test Procedure Requirements

1. Commercial Water Heater Draw Pattern

In response to the April 2020 RFI, EEI suggested DOE consider a definition and test procedure for consumer water heaters used in commercial settings. EEI suggested that the test procedure would

include a daily water draw (*i.e.,* draw pattern) that is greater than the ''high'' draw pattern, which is the draw pattern with the largest amount of delivered water in the test procedure for consumer water heaters. (EEI, No. 8 at p. 3)

DOE has tentatively determined not to add a draw pattern with a delivered volume greater than the high draw pattern in appendix E, which would represent consumer water heaters installed in commercial applications. Under 42 U.S.C. 6293(b)(3), in relevant part, any test procedures prescribed or amended shall be reasonably designed to produce test results which measure energy efficiency of a covered product during a representative average use cycle or period of use. Consumer water heaters are designed for use in residential applications and, as such, a draw pattern representative of a commercial installation would not be representative of the product's average use cycle or period of use.

2. Terminology

In sections 5.3.3.1 and 5.3.3.2 of appendix E, which describe general requirements and draw initiation criteria, respectively, for the FHR test, the term ''storage-type water heaters'' is used. However, the FHR test applies to all water heaters that are not flow-activated, which includes non-flow activated instantaneous water heaters. In the April 2020 RFI, DOE requested feedback on whether to update the phrase ''storage-type water heaters'' in section 5.3.3 to ''non-flow activated water heaters.'' 85 FR 21104, 21112 (April 16, 2020). AHRI, Keltech, Rheem, and Rinnai stated that there is no need to change the phrase ''storage-type water heaters'' in section 5.3.3. (AHRI, No. 17 at p. 9; Keltech, No. 7 at p. 1; Rheem, No. 14 at p. 7; Rinnai, No. 13 at p. 9) AHRI stated that if instantaneous water heaters are properly classified, this issue would be resolved (AHRI, No. 17 at p. 9).

DOE submitted a comment to the March 2019 ASHRAE Draft 118.2 that suggested changing the language within sections 7.3.3.1 and 7.3.3.2 from ''storage-type'' to ''non-flow activated.'' This proposed change was accepted by the ASHRAE 118.2 committee and is present in section 7.3.3.1 of the April 2021 ASHRAE Draft 118.2. Section 7.3.3.2 was not included in the April 2021 ASHRAE Draft 118.2. In an effort to align terminology with that recognized by industry in proceedings subsequent to the April 2020 RFI, DOE proposes to change the phrase ''storage-type'' to ''non-flow activated'' within sections 5.3.3.1 and 5.3.3.2 of appendix E and further proposes to change ''storage-type'' and ''instantaneous-type'' to ''non-flow activated'' and ''flow-activated,'' respectively, throughout appendix E. This change would be a clarification only and would not change the current application of sections 5.3.3.1 and 5.3.3.2 of appendix E.

In section 6.3.3 of appendix E, titled ''Hourly Standby Losses,'' the descriptions for cumulative energy consumption ($Q_{su,0}$ and $Q_{su,f}$) [36] and mean tank temperature ($\overline{T}_{su,0}$ and $\overline{T}_{su,f}$,) at the start and end of the standby period, along with the elapsed time, average storage tank temperature, and average ambient temperature over the standby period ($\tau_{stby,1}$, $\overline{T}_{t,stby,1}$, and $\overline{T}_{a,stby,1}$, respectively) [37] specifically refer to the standby period that would occur after the first draw cluster, but do not explicitly address the case where the standby period occurs after the last draw of the test.

In the April 2020 RFI, DOE requested feedback on whether it should revise the descriptions of $Q_{su,0}$, $Q_{su,f}$, $\overline{T}_{su,0}$, $\overline{T}_{su,f}$, $\tau_{stby,1}$, $\overline{T}_{t,stby,1}$, and $\overline{T}_{a,stby,1}$ to explicitly include cases where the standby period occurs after the last draw of the test, in addition to cases where the standby period occurs after the first draw cluster. 85 FR 21104, 21113 (April 16, 2020). AHRI, A.O. Smith, CSA, and Rheem recommended not changing the descriptions. (AHRI, No. 17 at p. 10; A.O. Smith, No. 20 at p. 5; CSA, No. 10 at p. 8; Rheem, No. 14 at p. 8) BWC observed inconsistences in definitions of the variables in the current test procedure in sections 1.13 and 6.3.3 and stated further that many of these can be addressed by adopting the descriptions in the March 2019 ASHRAE Draft 118.2. (BWC, No. 12 at p. 6)

Within appendix E, the standby loss period could occur at multiple points in the test, depending on the operation of the water heater under test, but, as described previously, the descriptions of these variables ($Q_{su,0}$, $Q_{su,f}$, $\overline{T}_{su,0}$, $\overline{T}_{su,f}$, $\tau_{stby,1}$, $\overline{T}_{t,stby,1}$, and $\overline{T}_{a,stby,1}$) reference only one of the possible time periods. Therefore, DOE proposes to remove references to specific time periods to reduce the possibility of confusion and to align with the April 2021 ASHRAE Draft 118.2.

3. Test Conditions

a. Supply Water Temperature

Section 2.3 of appendix E specifies maintaining the supply water temperature at 58 °F ±2 °F (14.4 °C ±1.1 °C). During the 24-hour simulated-use test, maintaining the supply water temperature within this range can be difficult at the immediate start of a draw due to the short time between draw initiation and the first measurement at 5 seconds (with subsequent measurements every 3 seconds thereafter), as required by sections 5.4.2 and 5.4.3 of appendix E. In some test configurations, particularly during the lower flow rate water draws, the inlet water and piping may retain heat from a previous draw, causing the water entering the unit during the initial measurements to be slightly outside of tolerance. Any supply water temperature reading outside of the test tolerances would invalidate a test. However, due to the small percentage of total water use that would be affected, supply water temperatures that are slightly out of tolerance for the first one or two data points would have a negligible effect on the overall test result.[38] This issue is less evident during the FHR test, which specifies an initial temperature measurement 15 seconds after the start of the water draw. This is not an issue during the Max GPM test due to the system being in steady state during the entire test.

In the April 2020 RFI, DOE requested feedback on whether one or two supply water temperature data points outside of the test tolerance at the beginning of a draw would have a measurable effect on the results of the test. 85 FR 21104, 21111 (April 16, 2020). DOE further requested feedback on whether it should consider relaxing the requirement for supply water temperature tolerances at the start of a draw, and if so, which methods are most appropriate for doing so while maintaining accuracy and repeatability. *Id.* at 85 FR 21111–21112. A.O. Smith stated there would be no measurable effect on test results by allowing one or two supply water temperature data points outside of the test tolerance at the beginning of a draw. (A.O. Smith, No. 20 at p. 4) NEEA recommended DOE conduct a sensitivity analysis to determine a reasonable range and encouraged relaxing the requirements to ease test burden. (NEEA, No. 21 at p. 7) A.O.

[36] The subscript ''su,0'' refers to the start of the standby period in which the standby loss coefficient is determined, and the subscript ''su,f'' refers to the end of this standby period.

[37] The subscript ''stby,1'' refers to the standby period in which the standby loss coefficient is determined. The subscripts ''t'' and ''a'' refer to the mean tank temperature and ambient temperature, respectively.

[38] For example, the first two temperature readings would reflect 8 seconds of water flow, in comparison to total water draw durations ranging from 1 minute to over 8 minutes, according to the water draw patterns defined in Tables III.1, III.2, III.3, and III.4 of appendix E.

Smith, NEEA, and Rheem recommended that DOE allow the first one or two measurements of the supply water temperature to be outside of test tolerance to ease test burden. (A.O. Smith, No. 20 at p. 4; NEEA, No. 21 at p. 7; Rheem, No. 14 at p. 6) AHRI, A.O. Smith, BWC, CSA, Rheem, and Rinnai recommended that DOE increase the time between initiating a draw and the first data measurement from 5 seconds to 15 seconds within section 5.4.2 of appendix E. (AHRI, No. 17 at p. 7; A.O. Smith, No. 20 at p. 4; BWC, No. 12 at p. 3; CSA, No. 10 at p. 6; Rheem, No. 14 at p. 6; Rinnai, No. 13 at p. 8) SMTI recommended that the supply water temperature requirement be changed to: the average supply water temperature during draws shall be 58 °F ±2 °F, with all data points being 58 °F ±5 °F. (SMTI, No. 19 at p. 4) NEEA encouraged DOE to relax the tolerances at the start of the draw and suggested allowing a given maximum percentage deviation in mass-weighted temperature over the course of a single draw or to set a corresponding absolute number. (NEEA, No. 21 at p. 7) CSA recommended that DOE adopt the March 2019 ASHRAE Draft 118.2 piping diagrams, with the by-pass loop, to alleviate inlet temperature problems. (CSA, No. 10 at p. 6) DOE notes this supply water temperature issue has been observed in testing with the test setup described in the March 2019 ASHRAE Draft 118.2. Therefore, adopting the March 2019 ASHRAE Draft 118.2 test setup alone would not alleviate this issue.

As explained previously, DOE agrees with commenters that one or two supply water temperature measurements outside of tolerance at the start of the draw will likely have no measurable effect on test results. These outside of tolerance measurements typically occur during draws with lower flow rates, where the inlet water line (which has been heated slightly due to heat transferring from the water heater) is not cleared by the first data measurement. DOE notes that during its own testing, multiple retests were sometimes needed before a valid test was performed. To alleviate this issue, DOE proposes to increase the time between initiating the draw and first measurement from 5 seconds to 15 seconds in sections 5.4.2 and 5.4.3 of appendix E, as recommended by the commenters. This proposed change may reduce test burden by reducing the occurrence of a test being invalidated (which would require re-testing) due to the first one or two water temperature readings exceeding the defined temperature tolerance. Further, this proposed change would eliminate the need to amend the supply water temperature tolerances, which, outside of the time period at the start of a draw, are relatively easy to maintain.

b. Test Tolerances

Section 2.2 of appendix E specifies maintaining the ambient air temperature between 65.0 °F and 70.0 °F (18.3 °C and 21.1 °C) on a continuous basis for all types of consumer water heaters (and residential-duty commercial water heaters) other than heat pump water heaters. For heat pump water heaters, the dry bulb (ambient air) temperature must be maintained between 67.5 °F ±1 °F (19.7 °C ±0.6 °C), and the relative humidity must be maintained at 50% ±2% throughout the test. Appendix E does not specify a relative humidity tolerance for non-heat pump water heaters. For all water heaters, section 2.7.1 of appendix E specifies maintaining the electrical supply voltage within ±1% of the center of the voltage range specified by the manufacturer. Similar to the supply water temperature discussed previously, a brief measurement of air temperature, relative humidity, or electrical supply voltage that is only minimally outside of the test tolerance would invalidate a test, but likely would have a negligible effect on the results of the test, as the total time out of tolerance would be insignificant compared to the total time of the test. In the April 2020 RFI, DOE requested feedback on whether the tolerances for ambient air temperature, relative humidity, and electrical supply voltage are difficult to maintain at the start of a draw, and if so, whether DOE should consider relaxing these requirements at the start of a draw and to what extent. 85 FR 21104, 21112 (April 16, 2020).

AHRI recommended that the tolerances for the electric supply voltage be made less stringent and noted that the current electric supply voltage requirements require specialized equipment that is very costly and has little effect on the UEF results. (AHRI, No. 17 at p. 8) CSA, NEEA, Rheem, and Rinnai proposed increasing the electrical supply voltage tolerance to ±2 percent of the rated voltage, while BWC proposed a tolerance of ±5% of the rated voltage. (CSA, No. 10 at p. 6; NEEA, No. 21 at p. 3; Rheem, No. 14 at p. 6; Rinnai, No. 13 at p. 8; BWC, No. 12 at p. 4) CSA further stated that the electric supply voltage tolerance should apply only when the main heat source is on, as there are spikes in voltage when heating is turned on/off. (CSA, No. 10 at p. 6) Keltech stated that it might be difficult to maintain ±1 percent voltage tolerance, as there might be considerable voltage sag [39] for really high amperage units, and that the test procedure should be clearer about what is acceptable for a power supply source to recover. (Keltech, No. 7 at p. 1)

DOE agrees with commenters that maintaining the electric supply voltage within ±1 percent of the rated voltage is difficult and requires expensive equipment, and that maintaining this narrow tolerance range is likely not necessary to achieve repeatable and reproducible test results. DOE further agrees with CSA and Keltech that short spikes in the measured voltage that occur around the start and end of a recovery, when heating components are turning on or off, have little to no effect on UEF, but can invalidate a test. Therefore, to reduce the potential need to re-run tests and thereby potentially reduce test burden, DOE proposes to increase the electrical supply voltage tolerance from ±1 percent on a continuous basis to ±2 percent on a continuous basis and to add clarification that this tolerance is only applicable beginning 5 seconds after the start of a recovery to 5 seconds before the end of a recovery (*i.e.,* only when the water heaters is undergoing a recovery). These proposed changes may reduce test burden by reducing the need to re-run tests while maintaining the representativeness of the test procedure.

SMTI stated that for heat pump water heaters the average dry bulb temperature during recoveries should be 67.5 °F ±1 °F, with all data points being 67.5 °F ±5 °F, and that the average dry bulb temperature during standby period should be 67.5 °F ±2.5 °F, with all data points being 67.5 °F ±5 °F. (SMTI, No. 19 at p. 4) Rheem recommended a dry bulb temperature tolerance between 65.0 °F and 70.0 °F for heat pump water heaters. (Rheem, No. 14 at p. 6) Rinnai stated that the average ambient air temperature for non-heat pump water heaters should be 67.5 °F ±2.5 °F, and that a single data point outside of the range should not invalidate a test. (Rinnai, No. 13 at p. 8) A.O. Smith stated that relaxing ambient air tolerance for the first 15 minutes during the test will not have a measurable effect on the overall test results and that DOE should investigate whether relaxing this tolerance for the entirety of the test still provides results that are repeatable and representative of an average use cycle. (A.O. Smith, No. 20 at p. 4)

[39] A voltage sag (or swell) is a short duration change in voltage which can be caused by sudden load changes or excessive loads (*e.g.,* a water heater starting or ending a recovery).

Through a review of its available test data, DOE has found that short fluctuations in ambient temperature have little to no effect on the test results of non-heat pump water heaters. Therefore, in an effort to reduce the need to re-run tests in instances in which the results of the invalid test and the valid test would not differ significantly, and therefore reduce test burden, DOE proposes to change the ambient temperature requirement for non-heat pump water heaters to an average of 67.5 °F ±2.5 °F, with a maximum deviation of 67.5 °F ±5 °F, as opposed to only a maximum deviation of 67.5 °F ±2.5 °F as currently specified in the test procedure.

For heat pump water heaters, DOE agrees with SMTI that the dry bulb temperature tolerances are important to maintain during recoveries but are less important during standby periods when the air is not being used to heat water. Further, through its own testing, DOE has observed that short deviations outside of the dry bulb temperature tolerances have little to no effect on the test results. Therefore, in an effort to reduce the need to re-run tests in instances in which the results of the invalid test and the valid test would not differ significantly, DOE proposes to change the dry bulb temperature requirement for heat pump water heaters to an average of 67.5 °F ±1 °F during recoveries and an average of 67.5 °F ±2.5 °F when not recovering, with a maximum deviation of 67.5 °F ±5 °F, as opposed to only a maximum deviation of 67.5 °F ±1 °F as currently specified in the test procedure. This proposed change would maintain the stringency of the dry bulb temperature requirement while allowing for short deviations from the targeted dry bulb temperature range, which would reduce the need to re-run tests in instances in which the results of the invalid test and the valid test would not differ significantly, and therefore reduce test burden.

In response to the April 2020 RFI, SMTI stated that for heat pump water heaters, the relative humidity tolerance is only relevant during recoveries and suggested changing the relative humidity requirements to an average of 50% ±2%, with a maximum deviation of 50% ±10%. (SMTI, No. 19 at p. 4) A.O. Smith stated that relaxing relative humidity tolerance for the first 15 minutes during the test will not have a measurable effect on the overall test results and that DOE should investigate whether relaxing this tolerance for the entirety of the test still provides results that are repeatable and representative of an average use cycle. (A.O. Smith, No. 20 at p. 4) BWC and Rinnai supported relaxing the relative humidity tolerance, and NEEA stated that the relative humidity tolerance should be increased from ±2 percent to ±5 percent. (BWC, No. 12 at p. 4; Rinnai, No. 13 at p. 8; NEEA, No. 21 at p. 4)

For heat pump water heaters, DOE is proposing to increase the absolute relative humidity tolerance from ±2 percent to ±5 percent across the entire test, with the average relative humidity between 50% ±2% during recoveries. This change would reduce test burden by reducing the need to re-run tests in instances in which the results of the invalid test and the valid test would not differ significantly.

As noted, appendix E does not currently specify a relative humidity tolerance for non-heat pump water heaters. As described in the April 2020 RFI, DOE has conducted exploratory testing to investigate the effect of relative humidity on the measured UEF values of two consumer gas-fired instantaneous water heaters that are flow activated and have less than 2 gallons of storage volume. 85 FR 21104, 21112 (April 16, 2020). Of the two models tested, one used non-condensing technology and the other used condensing technology. For each model, two tests were performed at a relative humidity of 50 percent, and two tests were performed at a relative humidity of 80 percent (*i.e.,* a total of four tests for each model). *Id.* Increasing in relative humidity from 50 percent to 80 percent resulted in a maximum change in UEF for the non-condensing and condensing models of 0.011 and 0.015, respectively. *Id.* Given that DOE requires reporting UEF to the nearest 0.01 (*see* 10 CFR 429.17(b)(2)), a change in UEF on the order of 0.01–0.02 as suggested by DOE's test results could be considered as substantively impacting the test results. DOE is still examining this issue and requests comment and test data on whether a relative humidity requirement should be added to appendix E for non-heat pump water heaters.

DOE is also proposing a clarification regarding the correction of the heating value to a standard temperature and pressure. Section 3.7 of appendix E states that the heating values of natural gas and propane must be corrected from those reported at standard temperature and pressure conditions to provide the heating value at the temperature and pressure measured at the fuel meter, but does not specify standard temperature and pressure conditions.

AHRI maintains an Operations Manual for Residential Water Heater Certification Program (AHRI Operations Manual),[40] which addresses how testing will be done in the AHRI certification program. The procedures outlined in the AHRI Operations Manual are similar to appendix E and provide instruction for AHRI certification program testing that is not included within the DOE test procedure. In section A1.4.1 of the AHRI Operations Manual, an equation is provided that corrects the measured heating value, when using a dry gas[41] and a wet test meter,[42] to the heating value at the standard temperature and pressure of 60 °F (15.6 °C) and 30 inches of mercury column (101.6 kPa), respectively. Annex B of the March 2019 ASHRAE Draft 118.2 also provides a method for correcting the heating value from measured to standard conditions, which allows for the use of either dry or saturated gas[43] and either a dry[44] or wet test meter. Sections 2.4.1 and 3.1.1 of appendix O to part 430 correct the input rate to the standard conditions of 60 °F (15.6 °C) and 30 inches of mercury column (101.6 kPa). Therefore, to align with the AHRI Operations Manual and the current practice in other appendices with part 430 of the CFR, DOE is proposing to explicitly state that the standard temperature and pressure conditions for gas measurements be 60 °F (15.6 °C) and 30 inches of mercury column (101.6 kPa), respectively. Further, to detail the method in which the heating value must be corrected to standard conditions and to align with the consensus industry standard, DOE proposes to reference Annex B of a finalized ASHRAE 118.2.

c. Gas Pressure

For gas-fired water heaters, sections 2.7.2 and 2.7.3 of appendix E require maintaining the gas supply pressure in accordance with the manufacturer's specifications; or if the supply pressure is not specified, maintaining a supply pressure of 7 to 10 inches of water column (1.7 to 2.5 kPa) for natural gas and 11 to 13 inches of water column (2.7 to 3.2 kPa) for propane gas. In addition, for gas-fired water heaters with a pressure regulator, sections 2.7.2 and 2.7.3 require the regulator outlet pressure to be within ±10 percent of the manufacturer's specified manifold pressure. From a review of product

[40] The AHRI Operations Manual for Residential Water Heater Certification Program is available at: *www.ahrinet.org/App_Content/ahri/files/Certification/OM%20pdfs/RWH_OM.pdf.*

[41] Dry gas refers to non-saturated test gas that does not contain water vapor.

[42] A wet test meter measures the heating value of saturated test gas that contains water vapor.

[43] Saturated gas refers to test gas that contains water vapor.

[44] A dry test meter measures the heating value of dry test gas.

literature, DOE has found that many gas-fired water heaters with modulating input rate burners have a factory preset manifold pressure that is computer-controlled and cannot be adjusted directly. Further, the manufacturer-specified manifold pressure typically refers to when the water heater is operating at the maximum firing rate.

In the April 2020 RFI, DOE requested comment on whether sections 2.7.2 and 2.7.3 (Test Conditions for Natural and Propane Gas, respectively) should be amended to account for models where the manifold pressure cannot be adjusted directly and whether the ±10% tolerance on the manufacturer's specified manifold pressure should apply only when firing at the manufacturer specified maximum input rate. 85 FR 21104, 21112 (April 16, 2020). AHRI, CSA, Rheem, and Rinnai recommended that an alternate tolerance based on percentages be used when a ''zero-governor'' valve [45] is used. (AHRI, No. 17 at p. 8; CSA, No. 10 at p. 7; Rheem, No. 14 at p. 7; Rinnai, No. 13 at p. 9) Rheem commented that the ±10 percent tolerance should apply when operating at the manufacturer's specified firing rate, and that for modulating water heaters the ±10 percent tolerance should be applied to the maximum firing rate. (Rheem, No. 14 at p. 7) A.O. Smith and CSA suggested that sections 2.7.2 and 2.7.3 be amended to account for manifold pressure that cannot be adjusted directly, and specifically recommended that if the target manifold pressure cannot be achieved through manifold adjustment, then modifying the orifice should be required. (A.O. Smith, No. 20 at p. 4; CSA, No. 10 at p. 7)

Recognizing that certain gas-fired water heaters do not provide the capability to adjust the manifold pressure, DOE proposes to remove the ±10 percent manifold pressure tolerance for these products. DOE is proposing to add an absolute manifold pressure tolerance of ±0.2 inches water column, which would be used for gas-fired water heaters with a zero-governor valve for which the ±10 percent tolerance would be overly restrictive. For example, applying the ±10 percent to a manufacturer recommended gas pressure of 0.1 inches water column would result in a tolerance of ±0.01 inches of water column, which is less than both the accuracy and precision tolerances required for gas pressure instrumentation within section 3.1 of appendix E. Further, DOE proposes that the required gas pressures within appendix E apply when operating at the manufacturer's specified input rate or, for modulating input rate water heaters, the maximum input rate. Section III.C.3.d of this document provides further discussion on modifying the orifice of gas-fired water heaters that are not operating at the manufacturer specified input rate.

d. Input rate

In addition to the gas pressure requirements, section 5.2.3 requires maintaining an hourly Btu rating (*i.e.,* input rate) that is within ±2 percent of the value specified by the manufacturer (*i.e.,* the nameplate value). DOE has observed during testing that an input rate cannot be achieved that is within ±2 percent of the nameplate value while maintaining the gas supply pressure and manifold pressure within the required ranges for some gas-fired water heaters. In such instances, it is common practice for the testing laboratory to modify the size of the orifice that is shipped with the water heater; for example, the testing laboratory may enlarge the orifice to allow enough gas flow to achieve the nameplate input rating within the specified tolerance, if the input rate is too low with the orifice as supplied. For commercial water heating equipment, DOE addressed this issue by specifying in the product-specific enforcement provisions that, if the fuel input rate is still not within ±2 percent of the rated input after adjusting the manifold and supply pressures to their specified limits, DOE will attempt to modify the gas inlet orifice. 10 CFR 429.134(n)(ii).

In the April 2020 RFI, DOE requested comment on whether provisions should be added to the test procedure at appendix E to address water heaters that cannot operate within ±2 percent of the nameplate rated input as shipped from the factory. 85 FR 21104, 21112 (April 16, 2020). If so, DOE requested comment on how to address this issue, and whether it is appropriate to physically modify the orifice, similar to the direction for commercial water heaters. *Id.* AHRI, Rheem, and Rinnai recommended using the test procedure in the AHRI Operations Manual for Residential Water Heater Certification Program, which specifies procedures to adjust the test setup when the appliance's input rate is not within the ±2 percent of the specified input rate either by adjusting the manifold pressure, modifying the orifice of the unit, or checking/fixing any leaks. (AHRI, No. 17 at p. 8; Rheem, No. 14 at p. 7; Rinnai, No. 13 at p. 9) BWC stated that DOE should add provisions to address products that cannot operate within ±2 percent of the nameplate input rate, potentially by allowing manufacturers to provide testing facilities with alternate means to achieve the rated input, such as modifying the orifice(s) while the regulator outlet pressure is within ±10 percent of the manufacturer's specified manifold pressure. (BWC, No. 12 at p. 4) CEC recommended that DOE review, study, and provide results to stakeholders before allowing laboratories to make any physical modification to the size of the gas flow orifice to increase or decrease gas flow to achieve the nameplate input rating within the specified tolerance, further stating that this modification should be made by the manufacturer prior to testing, since this will lead to false efficiency readings that are not representative of actual use and could negatively impact the consumers ability to choose an efficient water heater. (CEC, No. 11 at p. 4)

After considering these comments, DOE proposes to add provisions to appendix E to provide further direction for achieving an input rate that is ± 2 percent of the nameplate value specified by the manufacturer. Specifically, DOE proposes to modify section 5.2.3 of appendix E to require that the following steps be taken to achieve an input rate that is ± 2 percent of the nameplate value specified by the manufacturer. First, attempt to increase or decrease the gas outlet pressure within ± 10 percent of the value specified on the nameplate to achieve the nameplate input (within ±2 percent). If the fuel input rate is still not within ±2 percent of the nameplate input, increase or decrease the gas supply pressure within the range specified on the nameplate. If the measured fuel input rate is still not within ±2 percent of the certified rated input, modify the gas inlet orifice as required to achieve a fuel input rate that is ± 2 percent of the nameplate input rate. Regarding commenters' suggestion to check for leaks as an additional step in the process, DOE notes that gas leak detection should be part of a test laboratory's normal operating procedures and, therefore, detection does not require specification within DOE's test procedures. In response to CEC's concern regarding representativeness, the purpose of adjusting the orifice during testing is to ensure that the performance of the water heater is representative of performance at the Btu rating specified by the manufacturer on the product's nameplate, which informs the field installation conditions. Allowing for

[45] A zero-governor valve controls the outlet pressure of the valve to a target of near-zero inches of water column (*i.e.,* zero pressure).

adjustment of the orifice reduces test burden and improves repeatability by providing test laboratories with a last resort to maintain the hourly Btu rating as specified by the manufacturer. Further, DOE is proposing that modification of the orifice be done only after other options have been exhausted.

DOE seeks further comment on its proposed amendments to clarify the procedure for achieving an input rate within ±2 percent of the nameplate input rating.

DOE also proposes to add enforcement specific provisions to 10 CFR 429.134 to require that if the fuel input rate still cannot be achieved within ±2 percent of the nameplate input rate after adjusting the burner as described above, the fuel input rate found via testing will be used for the purpose of determining compliance. DOE proposes similar provisions for oil-fired water heaters that cannot be adjusted to within ±2 percent of the nameplate value. DOE requests comment on this proposal.

e. Optional Test Conditions

In response to the April 2020 RFI, NEEA requested that DOE allow for optional reporting of additional efficiency ratings at two different ambient and inlet water temperature conditions within the Compliance Certification Management System (CCMS) database, specifically for heat pump water heaters. NEEA further recommended that testing and reporting of the lower compressor cut off temperature in the CCMS database, similar to NEEA's Advanced Water Heating Specification, be required. (NEEA, No. 21 at pp. 1–3) The Joint Advocates requested that DOE explore the usage of NEEA's Advanced Water Heating Specification and allowing for voluntary testing needed to calculate climate-specific efficiency. (Joint Advocates, No. 15 at pp. 1–2)

DOE recognizes that regional differences in ambient temperature, inlet water temperature, and relative humidity exist and that these differences can have an effect on the efficiency of heat pump water heaters. However, as required under EPCA, the DOE test procedure must be reasonably designed to produce test results which measure energy efficiency during a representative average use cycle or period of use. (42 U.S.C. 6293(b)(3)) Compliance with the applicable energy conservation standard, which was developed based on an analysis of water heaters nationally, must be determined using the current DOE test procedure. (42 U.S.C. 6295(s)). The conditions in appendix E are representative of the nation as a whole. Moreover, DOE does not have data to indicate what conditions would be representative for regional representations. As the test procedure must be representative of the nation as a whole, and as DOE has no data to indicate what conditions would be representative for regional representations, DOE has tentatively determined not to allow for optional reporting of additional efficiency ratings at test conditions other than those found in the DOE test procedure.

4. Mixing Valve

Through a review of product literature, DOE has found consumer water heaters on the market that are designed to, or have operational modes that, raise the temperature of the stored water significantly above the outlet water temperature requirements specified in section 2.4 of appendix E (*i.e.,* 125 °F ±5 °F (51.7 °C ±2.8 °C)). These water heaters are meant to be installed with a mixing valve, which may or may not be provided with, or built into, the unit, to temper the outlet water to a typical outlet water temperature. Generally, raising the temperature of the water in the storage tank significantly above the target output temperature (*i.e.,* ''over-heating'' the water) without the presence of a mixing valve would effectively increase the amount of hot water that a given size water heater can deliver (*e.g.,* a 50 gallon water heater with an over-heated storage tank temperature could provide the same amount of hot water as an 80 gallon water heater with a more typical storage tank temperature). An FHR test performed at an over-heated storage tank temperature would result in a higher FHR than a test performed at a lower, more typical storage tank temperature. The installation instructions in section 4 of appendix E do not address when a separate mixing valve should be installed, and the operational mode selection instructions in section 5.1 of appendix E do not specifically address when the water heater has an operational mode that can over-heat the water in the storage tank. However, section 5.1 of appendix E requires that the water heater be tested in its default mode, and where a default mode is not specified, to test the unit in all modes and rate the unit using the results of the most energy-intensive mode.

The ENERGY STAR program published a Test Method to Validate Demand Response [46] for connected residential water heaters on April 5, 2021 (ENERGY STAR Connected Test Method). Section 4.1 of the ENERGY STAR Connected Test Method, which was developed with input from industry, addresses the test setup in which a separate mixing valve is required. This setup requires the installing the mixing valve in accordance with the water heater and mixing valve manufacturer's instructions. Absent instruction from the water heater or mixing valve manufacturer, the mixing valve is to be installed in the outlet water line, upstream of the outlet water temperature measurement location, with the cold water supplied from a tee installed in the inlet water line, downstream of the inlet water temperature measurement location (*i.e.,* the mixing valve and cold water tee are installed within the inlet and outlet water temperature measurement locations). Section 4.1 of the ENERGY STAR Connected Test Method further clarifies that if the liquid flow rate and/or mass measuring instrumentation is installed on the outlet side of the water heater, that it shall be installed after the mixing valve.

To accommodate water heaters that are designed to, or have operational modes that, raise the temperature of the stored water significantly above the outlet water temperature requirements specified in section 2.4 of appendix E, DOE proposes to add instructions for the installation of a mixing valve similar to what is published in section 4.1 of the ENERGY STAR Connected Test Method.

5. Mass Measurements

In appendix E, both section 6.3.2, which provides for the computation of the recovery efficiency for gas, oil, and heat pump storage-type water heaters, and section 6.4.1, which provides for computation of the recovery efficiency for water heaters with rated storage volume less than 2 gallons, specify that the total mass of water removed (*i.e.,* mass of water that flows through the outlet) from the start of the 24-hour simulated-use test to the end of the first recovery period (M_1) is used to calculate recovery efficiency. The test procedure accommodates determining the total mass either directly (*e.g.,* through the use of a weighing scale), or indirectly by multiplying the total volume removed (V_1) (*i.e.,* total volume of hot water flow through the outlet) by the density of

[46] The Energy Star Test Method to Validate Demand Response for Connected Residential Water Heaters is available at: *www.energystar.gov/sites/default/files/ENERGY%20STAR%20Connected%20Residential%20Water%20Heaters%20Test%20Method%20to%20Validate%20Demand%20Response_0.pdf.*

water (ρ_1) as determined based on the water temperature at the point where the flow volume is measured.[47]

a. Flow Meter Location

The current test procedure does not specify where in the flow path the flow volume and density must be measured, which allows for laboratory test setups that measure the flow volume either on the cold inlet side of the water heater or on the hot outlet side. Allowing the flow meter to be located on either the inlet or outlet side, and calculating the mass of the water that is heated during the test based on the density of the water where the flow meter is located, could result in differences in the mass of water that is calculated depending on whether the flow meter is in the inlet water line or the outlet water line. Because the inlet water is colder than at the outlet, it is also denser, meaning that the same volume of water has more mass at the inlet than the outlet. In addition, some of the mass of inlet water could, after being heated, expand out of the water heater into the expansion tank and be purged prior to a draw.[48] Any ''expanded'' volume of water that is lost through the by-pass (purge) line could be included in a volume measurement taken at the inlet, but not be included in a volume measurement taken at the outlet.

In the April 2020 RFI, DOE requested feedback on whether the consumer water heater test procedure should require measurement of flow in the outlet water line to ensure that the mass of water removed from the tank is accurate. 85 FR 21104, 21113 (April 16, 2020). DOE further requested comment on whether requiring the density, ρ_1, to be determined based on the outlet temperature, rather than the temperature where the flow volume is measured, would alleviate this issue. *Id.* AHRI disagreed with requiring measurement of flow in the outlet water line and recommended that measurements be allowed on the inlet to ensure greater long-term reliability of the volume or mass flow measurement device used. (AHRI, No. 17 at p. 9) Rheem and Rinnai opposed requiring measurement of flow in the outlet water line, as they believe it is more consistent to measure the inlet. (Rheem, No. 14 at pp. 7–8; Rinnai, No. 13 at p. 10) BWC stated that DOE should continue to allow manufacturers and laboratories to maintain the option of placing a water meter as part of the inlet water piping. (BWC, No. 12 at p. 5) CSA and Keltech stated that flow rate should be measured at the outlet, not the inlet of a water heater. (CSA, No. 10 at p. 7; Keltech, No. 7 at p. 1) CSA also stated that measuring water based on mass would work and would give the best results since mass is measured directly and temperature measurements are not needed; however, CSA noted this would require the use of a mass flow meter. CSA stated that for labs that do not have a mass flow meter and instead use volume flow meters like a magnetic flow meter, the location of the temperature sensor to determine the density needs to be specified. (CSA, No. 10 at p. 7)

DOE conducted exploratory testing to evaluate the effect on the test results due to differences in recording the water delivered using a flow meter at the inlet and outlet of the water heater, compared to the mass delivered as measured with a scale. The mass delivered was measured directly using Coriolis flow meters and these values were compared to the mass measured by the scale. The three different mass values were used to determine the UEF and the results are shown in Table III.2. Table III.2 shows the measured mass of each draw of the 24-hour simulated-use test, the root-mean-square deviation[49] (RMSD) of the mass measurements, and the resulting UEF values for each mass measurement method used in the calculations. DOE's preliminary testing indicates that more accurate measurements of the mass of water delivered are obtained at the outlet flow meter as compared to the inlet flow meter. The difference in UEF between the outlet flow meter and the scale method was 0.002 and 0.016 for gas-fired storage and instantaneous water heaters, respectively; whereas the difference in UEF between the inlet flow meter and the scale method was 0.023 and 0.029 for gas-fired storage and instantaneous water heaters, respectively.

TABLE III.2—TEST RESULTS USING MASS MEASURED BY INLET AND OUTLET FLOW METERS AND AN OUTLET SCALE

Water heater description	Gas-fired storage water heater			Gas-fired instantaneous water heater		
Mass determination method	Inlet flow meter	Outlet flow meter	Outlet scale	Inlet flow meter	Outlet flow meter	Outlet scale
Resulting UEF	0.641	0.620	0.618	0.820	0.807	0.791
RMSD, lbs	1.97	0.39	N/A	2.67	2.10	N/A
Draw	lbs	lbs	Lbs	Lbs	lbs	lbs
1	222.5	218.7	218.3	223.2	222.0	214.5
2	16.3	15.6	15.0	16.1	15.6	13.9
3	8.2	7.7	7.1	7.9	7.7	7.1
4	74.1	72.2	72.3	74.5	73.0	72.8
5	124.9	122.2	121.7	123.4	122.2	121.5
6	41.0	39.6	39.9	41.2	40.8	40.3
7	8.0	7.1	7.1	8.0	7.1	6.6
8	8.1	7.4	7.3	7.7	7.4	6.6
9	8.1	7.3	7.1	8.4	8.0	7.5
10	16.3	15.7	15.7	16.4	16.0	15.2
11	16.4	15.3	15.2	16.7	16.2	16.1
12	16.4	14.7	15.0	16.3	15.5	15.7
13	16.7	15.3	15.4	17.1	16.3	16.3
14	115.5	111.5	112.2	115.8	113.8	113.5

[47] Although the DOE test procedure does not specify how to measure and/or calculate density, it is typically calculated using either a regression equation or density tables based on a specific temperature and pressure.

[48] The change in volume occurs because water expands and increases in volume as it is heated.

[49] RMSD is the square root of the average of squared deviations, or differences, between the mass measured by the inlet or outlet flow meter and the outlet scale. By using RMSD, any ''negative'' differences are converted to ''positive,'' which provides a more meaningful basis for calculating the average deviation from the reference.

The trend from DOE's preliminary test results is consistent with CSA and Keltech's comments. However, at this time, the preliminary testing is not sufficient for DOE to propose requiring the measurement of the mass or volume water at the outlet or at the inlet of the water heater. DOE's preliminary results are based on testing only one unit each of a gas-fired storage water heater and a gas-fired instantaneous water heater. It is not clear that measurements for all water heaters would demonstrate a similar impact based on the location of the measurement at the outlet versus inlet of the water heater. From DOE's testing using third party laboratories, most, if not all, tests are conducted with a flow meter installed on the inlet side of the water heater. To require water flow to be measured at the outlet may require consumer water heaters on the market to be retested without a complete understanding of the impact of the change in measurement location. Therefore, DOE requests test data comparing the results of testing with flow meters installed at the inlet or outlet of the water heater.

b. Mass Calculation

In sections 6.3.5 and 6.4.2 of appendix E, the mass withdrawn from each draw (M_i) is used to calculate the daily energy consumption of the heated water at the measured average temperature rise across the water heater (Q_{HW}). However, neither section includes a description of how to calculate the mass withdrawn for tests in which the mass is indirectly determined using density and volume measurements.

In the April 2020 RFI, DOE requested feedback on whether to update the consumer water heater test procedure to include a description of how to calculate the mass withdrawn from each draw in cases where mass is indirectly determined using density and volume measurements. 85 FR 21104, 21113 (April 16, 2020). AHRI recommended including a description of how to calculate the mass withdrawn from each draw where mass is indirectly determined by using one of the calculations from the AHRI Operations Manual for Residential Water Heater Certification Program. (AHRI, No. 17 at p. 9) A.O. Smith, Rheem, and Rinnai supported the use of the method recommended by AHRI. (A.O. Smith, No. 20 at p. 4; Rheem, No. 14 at p. 8; Rinnai, No. 13 at p. 10) BWC stated that DOE should update the federal test procedure to include a means to calculate the mass withdrawn from each draw in cases where mass removed is determined using ratio of the inlet and outlet densities and volume measured on the inlet. (BWC, No. 12 at p. 5) Keltech stated that DOE does not need to specify the means to collect mass or volume measurements and that DOE should only specify the accuracy and tolerance of mass, volume, or temperature measurements. (Keltech, No. 7 at p. 1)

DOE is proposing to specify how mass calculations are made when the mass is indirectly determined using density and volume measurements. Specifically, DOE proposes that the volume at the outlet would be multiplied by the density, which would be based on the average outlet temperature measured during the draw. DOE is also proposing to add procedures similar to those in the AHRI Operations Manual for Residential Water Heater Certification Program; in particular, a method of converting inlet water volume to outlet water volume using the ratio of the water densities at the inlet and outlet.[50] In response to Keltech's comment, DOE is not proposing to specify the means to collect mass or volume measurements. Rather, DOE is specifying how to calculate outlet water volume and mass regardless of the means used to collect mass or volume measurements.

6. Very Small Draw Pattern Flow Rate

Section 5.4.1 of appendix E states that if the Max GPM is less than 1.7 gpm (6.4 L/min) that the very small draw pattern be used during the 24-hour simulated-use test. Section 5.5 of appendix E states that, for the very small draw pattern, if the water heater has a Max GPM rating less than 1 gpm (3.8 L/min), then all draws shall be implemented at a flow rate equal to the rated Max GPM. DOE has identified flow-activated water heaters that are designed to deliver water at the set point temperature of 125 °F ±5 °F (51.7 °C ±2.8 °C) that is required by section 2.5 of appendix E at a flow rate well below 1 gpm (3.8 L/min). For these products, draw 2 of the very small draw pattern requires 1 gallon to be removed at the rated Max GPM and the pattern requires draw 3 to start five minutes after draw 2 initiation. However, any rated Max GPM less than or equal to 0.2 gpm (0.76 L/min) will result in draw 2 lasting more than five minutes and past the start time of draw 3. To clarify the appropriate method of testing these products, DOE proposes to amend the very small draw pattern description to state that when a draw extends beyond the start time of a subsequent draw, that the subsequent draw will start after the required volume of the previous draw has been delivered.

7. Low Temperature Water Heaters

DOE has identified flow-activated water heaters that are designed to deliver water at a temperature below the set point temperature of 125 °F ±5 °F (51.7 °C ±2.8 °C) that is required by section 2.5 of appendix E. These water heating products are typically marketed as ''handwashing'' or ''POU water'' heaters. These units typically have low heating rates, which requires the testing agency to reduce the flow rate in order to be able to achieve the outlet temperature within the set point temperature range. However, these units have a minimum activation flow rate below which the unit shuts off. To the extent that a unit would stop heating water when the flow rate is too low, there may be no flow rate at which the unit would operate and deliver water at the outlet temperature required under section 2.5 of appendix E.

In the April 2020 RFI, DOE requested feedback on whether language should be added to section 5.2.2.1 of appendix E, titled, ''Flow-Activated Water Heaters, including certain instantaneous water heaters and certain storage-type water heaters,'' to allow for water heaters not designed to deliver water at 125 °F ±5 °F (51.7 °C ±2.8 °C) to be tested at a lower set point temperature, or whether other changes to the test method need to be made to accommodate these types of models (*e.g.,* an additional draw pattern, product definition). 85 FR 21104, 21113 (Apr. 16, 2020). AHRI, A.O. Smith, CSA, EEI, Keltech, and Rheem recommended that the test procedure be modified to include a lower set point temperature to accommodate products that are not designed to deliver water at 125 °F ±5 °F. (AHRI, No. 17 at p. 11; A.O. Smith, No. 20 at p. 5; CSA, No. 10 at p. 8; EEI, No. 8 at p. 4; Keltech, No. 7 at p. 1; Rheem, No. 14 at p. 9) A.O. Smith further recommended that any alternative provisions require testing at the maximum water temperature delivery that the model is capable of delivering. (A.O. Smith, No. 20 at p. 5) CSA and Rheem added that most of these heaters are specialized, as some are only used for handwashing or point-of-use applications, so they do not need to go through a typical DOE draw pattern. (CSA, No. 10 at p. 8; Rheem, No. 14 at p. 9)

Water heaters that provide water at a maximum temperature lower than 125 °F (*i.e.,* ''low temperature'' water heaters) are consumer water heaters. To the extent that a ''low temperature'' water heater uses electricity as the

[50] The AHRI Operations Manual for Residential Water Heater Certification Program specifies that the outlet water volume is equal to the inlet water volume times the inlet water density divided by the outlet water density.

energy source, has a nameplate input rating of 12 kW or less, and contains no more than one gallon of water per 4,000 Btu per hour of input, it would be an electric instantaneous water heater. 10 CFR 430.2. The definition of water heater or electric instantaneous water heater does not include a minimum water delivery temperature. As stated, ''low temperature'' water heaters cannot be tested under the current DOE test procedure. To the extent that a consumer water heater is not able to heat water to the required set point temperature, the manufacturer would be required to petition DOE for a waiver from the DOE test procedure and request use of an alternate test procedure pursuant to the procedure at 10 CFR 430.27.

Although DOE has not received any such petitions, to minimize the potential need for manufacturers to petition for a test procedure waiver, DOE is proposing to define ''low temperature'' water heaters and to establish test procedure provisions that specify a lower set point temperature for such products. DOE is proposing to define a ''low temperature water heater'' as ''an electric instantaneous water heater that, is not a circulating water heater and, cannot deliver water at a temperature greater than or equal to the set point temperature specified in section 2.5 of appendix E to subpart B of this part when supplied with water at the supply water temperature specified in section 2.3 of appendix E to subpart B of this part.''

DOE has tentatively determined that lowering the set point temperature for ''low temperature'' water heaters to their maximum possible delivery temperature would permit these water heaters to be tested appropriately and in a manner that would produce representative test results. Therefore, DOE proposes to require low temperature water heaters to be tested to their maximum possible delivery temperature.

As stated previously, if a consumer water heater exists that is not able to heat water to the required set point temperature, the manufacturer would be required to petition DOE for a waiver from the DOE test procedure and request use of an alternate test procedure pursuant to the procedure at 10 CFR 430.27. If a manufacturer produces a consumer water heater that is not able to heat water to the required set point temperature but does not meet the definition of a ''low temperature water heater'' as proposed in this document, the manufacturer should petition DOE for a waiver for that model.

8. Heat Pump Water Heater Heaters

a. Controls

As discussed in section III.A.1.a, in the present market, a consumer heat pump water heater typically consists of an air-source heat pump and a storage tank that are integrated together into one assembly. This ''typical'' consumer heat pump water heater uses electricity and has backup resistance elements within the storage tank. Heating water with the heat pump components is more efficient than heating water with the backup resistance elements. Therefore, water heaters with controls that prioritize heat pump water heating over resistance element water heating will operate more efficiently than water heaters that do not prioritize heat pump water heating or that do not prioritize heat pump water heating to the same extent.

In response to the April 2020 RFI, the Joint Advocates suggested modifying the test procedure to reflect the effectiveness of controls in minimizing use of the resistance element in heat pump water heaters, stating this modification would improve the representativeness of the test procedure and create new incentives for manufacturers to develop products that provide increased savings for consumers. (Joint Advocates, No. 15 at p. 2) No suggestion was provided on how to better reflect the use of controls to minimize element usage.

DOE's test data shows that for most (or possibly all) heat pump water heater models available on the market currently, electric elements do not turn on during the 24-hour simulated-use test. Although element usage during the test could be forced through a more aggressive draw pattern (*i.e.,* longer or more frequent draws designed to deplete the water heater and require more hot water than the heat pump alone could keep up with), the draw patterns are required to be representative of actual use. Therefore, designing the draw pattern with the goal of forcing resistance element use would not be representative of typical use, and DOE has tentatively determined not to modify the test procedure to activate the use of electric resistance elements in heat pump water heaters during testing.

b. Split-System Heat Pump Water Heaters

In response to the April 2020 RFI, the Joint Advocates and NEEA recommended that DOE investigate the inclusion of niche products, such as split system heat pumps, within appendix E. (Joint Advocates, No. 15 at p. 3; NEEA, No. 21 at p. 3) In a split system heat pump, the heat pump part of the system is typically installed outdoors. The storage tank part of the system is typically installed indoors and does not use the ambient air for water heating directly. As discussed in section III.C.3.b, different ambient conditions are specified in appendix E for heat pump water heaters and non-heat pump water heaters. For split system heat pump water heaters, DOE is proposing to specify that the heat pump part of the system shall be tested using the heat pump water heater dry bulb temperature and relative humidity requirements, while the storage tank part of the system shall be tested using the non-heat pump water heater ambient temperature and relative humidity requirements. DOE notes that the required non-heat pump water heater ambient conditions can be met by keeping the entire system within the dry bulb temperature and relative humidity requirements for heat pump water heaters (*i.e.,* both parts of the system can be tested in the same psychrometric chamber).

c. Heat Pump Only Water Heaters

As discussed in section III.A.1.a, certain heat pump water heaters are sold that consist of only a heat pump (*i.e.,* heat pump only water heater). These heat pump only water heaters require the use of a separate storage tank to properly operate. The current DOE test procedure does not have procedures in place to appropriately test these water heaters.

In a final rule published October 17, 1990, DOE established test procedures that included a description of how to test heat pump water heaters sold without a storage tank. 55 FR 42162, 42173. These procedures were updated in the May 1998 final rule and included testing the heat pump water heater with an electric storage water heater having a measured volume of 47 gallons ±1.0 gallons (178 liters ±3.8 liters); two 4.5 kW heating elements controlled in such a manner as to prevent both elements from operating simultaneously; and a rated efficiency at or near the minimum energy conservation standard. 63 FR 25996, 26011 (May 11, 1998).

DOE published the April 2010 final rule based on an evaluation of heat pump only water heaters available on the market. 75 FR 20112 (April 16, 2010). DOE determined such water heaters do not meet EPCA's definition of a ''water heater'' and are not covered products. *Id.* at 75 FR 20127. The products that provided the basis for DOE's determination were characterized as add-on heat pump water heaters. *Id.* In a NOPR that preceded the April 2010 final rule, DOE stated that add-on heat pump water heaters are typically

marketed and used as an add-on component to a separately manufactured, fully functioning electric storage water heater. 74 FR 65852, 65865 (Dec. 11, 2009). DOE further stated that the add-on unit consists of a small pump and a heat pump system. *Id.* In the products considered by DOE, the pump circulates refrigerant from the water heater storage tank through the heat pump system and back into the tank, while the heat pump extracts heat from the surrounding air and transfers it to the refrigerant. *Id.* The add-on units evaluated for DOE's determination cannot by themselves provide hot water on demand, but rather heat water only when operated in conjunction with a storage water heater. *Id.* DOE also stated that manufacturers do not ship add-on heat pump water heaters as self-contained, fully functioning water heaters or paired with a storage tank, and that the add-on device, by itself, is not capable of heating water and lacks much of the equipment necessary to operate as a water heater. *Id.* The test procedures addressing heat pump water heaters that are sold without a storage tank were removed in the July 2014 final rule, due to the previous determination that add-on heat pump water heaters are not covered products. 79 FR 40542, 40547 (July 11, 2014).

A review of the current market has identified certain heat pump only water heaters that operate differently than the add-on heat pump water heaters that were examined during the April 2010 final rule. Certain heat pump only water heaters are used in conjunction with a separately sold unfired hot water storage tank or backup storage water heater and extract ''cold'' water from the tank, heat the water directly using the ambient air as the heat source, and return water at a slightly higher temperature to the storage tank or backup heater. In contrast to the add-on heat pump water heaters previously examined in the April 2010 Final Rule, these heat pump only water heaters heat water directly. Currently, testing these heat pump only water heaters to appendix E is not possible because they are unable to heat water to the required set point temperature on demand. These products require the use of a separately sold storage tank and gradually increase the temperature of the stored water to the required outlet temperature.

Because of the differences with certain heat pump only water heaters currently on the market as compared to the add-on heat pump water heaters that provided the basis for DOE's prior determination, DOE has tentatively determined that certain heat pump only water heaters are covered products. As discussed in section III.A.1.a, DOE is proposing a definition for ''circulating water heater,'' which covers heat pump only water heaters, and that procedures to test these products should be included in appendix E.

As stated previously, a 47-gallon electric storage water heater that uses electric resistance elements and that has a rated efficiency at or near the minimum energy conservation standard was previously required when testing the test procedures prior to the July 2014 final rule. Consistent with DOE's prior approach to testing heat pump only water heaters, DOE is proposing testing with a standard storage tank. Through testing of integrated heat pump water heaters,[51] DOE has observed that the electric resistance elements do not turn on during the 24-hour simulated-use test. Therefore, DOE is not proposing to require backup heating (*i.e.,* electric resistance elements) within the standard storage tank, as the backup heating would likely not operate during the test. DOE reviewed the CCMS database for unfired hot water storage tanks[52] and found that several manufacturers produce 80-gallon unfired hot water storage tanks, while no manufacturers produce a 47-gallon unfired hot water storage tank. DOE is proposing that the storage tank to be used with a heat pump only water heater would be an 80 gallon ±1 gallon unfired hot water storage tank that meets the energy conservation standards for an unfired hot water storage tank at 10 CFR 431.110(a).[53] DOE requests comment on the approach of using a standard storage tank for testing heat pump only water heaters and whether there are other procedures that are not burdensome to conduct and that are representative of actual use.

Were DOE to establish a test procedure for heat pump only water heaters, such water heaters would not be subject to energy conservation standards until such a time that DOE addressed such products in an energy conservation standard rulemaking.

9. Circulating Gas-Fired Water Heaters

As described in section III.A.1.c, several manufacturers produce ''circulating'' consumer gas-fired instantaneous water heaters that are designed to be used with a volume of stored water (usually in a tank, but sometimes within a recirculating hot water system of sufficient volume, such as a hydronic space heating or designated hot water system) in which the water heater does not directly provide hot water to fixtures, such as a faucet or shower head, but rather replenishes heat lost from the tank or system through hot water draws or standby losses. In section III.A.1.c, DOE tentatively determined that these water heaters are ''covered products'' under the ''water heater'' definition and proposed a definition for ''circulating water heaters'' to be included at 10 CFR 430.2.

In the April 2020 RFI, DOE requested feedback on what changes to the consumer water heater test procedure may be necessary to appropriately test circulating gas-fired instantaneous water heaters. DOE also requested feedback on whether there is an industry standard that would allow for testing of circulating gas-fired instantaneous water heaters that would provide results representative of the energy use of these products for an average use cycle or period of use. 85 FR 21104, 21113 (April 16, 2020). AHRI, Rinnai, and Rheem recommended using DOE's commercial water heater test procedure, which references parts of ANSI Z21.10.3–2015/CSA 4.3–2015 (ANSI Z21.10.3–2015), ''Gas-fired water heaters, volume III, storage water heaters with input ratings above 75,000 Btu per hour, circulating and instantaneous.'' (AHRI, No. 17 at p. 11; Rheem, No. 14 at p. 8; Rinnai, No. 13 at p. 10–11) Additionally, AHRI suggested that if DOE declines to modify the definition and retains circulating gas-fired instantaneous water heaters within scope of this test procedure, then DOE should consider adopting the thermal efficiency commercial test procedure and metric for these products. (AHRI, No. 17 at p. 11)

As stated previously in section III.A.1.c, DOE has tentatively determined that circulating water heaters are consumer water heaters and would be covered by DOE's test procedures for consumer water heaters. Congress, through 42 U.S.C. 6295(e)(5)(B), directed DOE to establish a ''uniform efficiency descriptor'' as the required metric for consumer water heaters. This ''uniform efficiency

[51] Integrated heat pump water heaters are discussed in section III.C.8.a and represent the ''typical'' heat pump water heater available on the market, in which the storage tank and heat pump are combined (integrated) into one assembly. The integrated heat pump water heaters on the market typically have electric resistance elements installed in the tank for supplementary heating when the heat pump alone cannot provide enough hot water. The residential application of an integrated heat pump water heater and a heat pump only water heater combined with a separately sold storage tank are similar.

[52] The CCMS database for unfired hot water storage tanks is available at: *www.regulations.doe.gov/certification-data/#q=Product_Group_s%3A**.

[53] Currently unfired hot water storage tanks must have a minimum thermal insulation of R–12.5.

descriptor'' was established during the July 2014 final rule and is the UEF metric. DOE may exclude a specific category of covered water heaters from the uniform energy descriptor established by DOE if DOE determines that the category of water heaters does not have a residential use and can be clearly described in the final rule, and is effectively rated using the thermal efficiency and standby loss descriptors applied to the category as of December 18, 2012, as a commercial water heater. 42 U.S.C. 6295(e)(5)(F) As stated previously, DOE has tentatively determined that circulating water heaters have a residential use. As such, to the extent that circulating water heaters are consumer water heaters, they would be subject to an energy conservation standard using the UEF metric.

Similar to heat pump only water heaters described in section III.C.8.c, circulating water heaters operate with a separate storage tank. Therefore, DOE has tentatively determined that, as proposed for heat pump only water heaters, circulating water heaters would be tested with an 80 gallon ± 1 gallon unfired hot water storage tank that meets the energy conservation standards for an unfired hot water storage tank at 10 CFR 431.110(a). DOE requests comment on the approach of using a standard storage tank for testing circulating water heaters and whether there are other procedures that are not unduly burdensome to conduct and that are representative of actual use.

10. Solar Water Heaters

In response to an RFI published on May 21, 2020 (May 2020 RFI), regarding the energy conservation standards for consumer water heaters (85 FR 30853), the Solar Rating & Certification Corporation (''(SRCC'')) recommended that solar water heating technologies be considered for inclusion in the DOE energy conservation standards and test procedures for consumer water heaters. SRCC stated that without the involvement of DOE, the industry metrics struggle to gain acceptance with policymakers and consumers. SRCC also stated that DOE rulemakings to include solar-equipped water heaters in regulations would serve to establish a single performance metric and signal the legitimacy of solar water heating technologies. (Docket: EERE–2017–BT–STD–0019, SRCC, No. 11 at pp. 3–4) On October 7, 2020, SRCC published a draft test procedure titled, ''Solar Uniform Energy Factor Procedure for Solar Water Heating Systems.'' [54] The draft SRCC test procedure addresses methods to test different types of solar water heaters.

On April 8, 2015, DOE published an energy conservation standards NOPR addressing definitions for consumer water heaters. 80 FR 18784. In particular, DOE proposed definitions for ''solar-assisted fossil fuel storage water heater'' and ''solar-assisted electric storage water heater'' and clarified that water heaters meeting these definitions are not subject to the amended energy conservation standards for consumer water heaters established by the April 2010 final rule. *Id.* at 80 FR 18789. DOE has tentatively determined to address solar water heaters in a separate rulemaking.

11. Connected Water Heaters

On September 17, 2018, DOE published an RFI seeking information on the emerging smart technology appliance and equipment market. 83 FR 46886 (September 2018 RFI). In the September 2018 RFI, DOE sought information to better understand market trends and issues in the emerging market for appliances and commercial equipment that incorporate smart technology. *Id.* at 83 FR 46887. DOE's intent in issuing the September 2018 RFI was to ensure that DOE did not inadvertently impede such innovation in fulfilling its statutory obligations in setting efficiency standards for covered products and equipment. *Id.* In the April 2020 RFI, DOE sought comment on the same issues presented in the September 2018 RFI as they may be applicable to consumer water heaters.

EEI stated that DOE should update the test procedure to better capture the performance difference between traditional and ''smart'' water heaters by including subcategories for non-connected,[55] connected,[56] and disconnected water heaters; [57] and provided recommended definitions for these categories. EEI further stated that during testing, ''connected'' water heaters should be disconnected from their external networks so that their UEF values can be compared on an equivalent basis with ''non-connected'' water heaters. (EEI, No. 8 at p. 2) NEEA commented that DOE should allow optional reporting of demand response [58] capability in CCMS. (NEEA, No. 21 at pp. 2–3) Similarly, in the May 2020 RFI, SRCC recommended that DOE consider adding a thermal energy storage [59] metric to the current test method. SRCC stated that in its simplest form, the metric could simply involve the calculation of the energy contained in water heated from the entering water temperature to the maximum operating temperature for the tank. According to SRCC, the metric could be accomplished using no additional testing and could help to spur the use of thermal energy storage and demand response in the context of consumer and commercial storage water heaters and unfired tanks. (Docket: EERE–2017–BT–STD–0019, SRCC, No. 11 at p. 5–6)

Section 5.1 of appendix E specifies the operational mode selection for water heaters, but does not explicitly address ''smart'' or ''connected'' modes of operation. For water heaters that allow for multiple user-selected operational modes, all procedures specified in appendix E must be carried out with the water heater in the same operational mode (*i.e.,* only one mode). Section 5.1 of appendix E. This operational mode must be the default mode (or similarly named, suggested mode for normal operation) as defined by the manufacturer in its product literature for giving selection guidance to the consumer. *Id.*

DOE is proposing to explicitly state that any connection to an external network or control would be disconnected during testing. While DOE recognizes that connected water heaters are on the market with varying implementations of connected features, DOE is not aware of any data available, nor did interested parties provide any such data, regarding the consumer use of connected features. Absent such data,

[54] SRCC's draft Solar Uniform Energy Factor Procedure for Solar Water Heating Systems is available at: *www.iccsafe.org/wp-content/uploads/is_stsc/Solar-UEF-Specification-for-Rating-Solar-Water-Heating-Systems-20201012.pdf.*

[55] EEI proposed to define non-connected water heaters as traditional water heaters that do not have ''smart'' features and cannot connect to any external network or device.

[56] EEI proposed to define connected water heaters as ''smart'' water heaters (that are not already categorized as grid-enabled water heaters) that connect to smart home networks and/or smart devices (home assistant speakers, smart phones, etc.) and/or external networks such as those provided by a local energy company.

[57] EEI proposed to define disconnected water heaters (for test procedures only) as ''smart'' water heaters (that are not already categorized as grid-enabled water heaters) that have the ability to disconnect from smart home networks and/or smart devices (home assistant speakers, smart phones, etc.) and/or external networks based on user command or as a ''default'' mode if it detects problems with the communication network.

[58] Demand response refers to changes in electric or gas usage from the normal consumption patterns in response to changes in the price of electricity or gas over time, or to incentive payments designed to induce lower electricity or gas use at times of high wholesale market prices or when system reliability is jeopardized.

[59] Thermal energy storage is important to demand response programs, as the water that is heated during off-peak times must be kept heated and ready for use when the consumer desires hot water.

DOE is unable to develop a representative test configuration for assessing the energy consumption of connected functionality for water heaters.

Furthermore, while acknowledging the potential benefits that could be provided by connected capability, such as providing energy saving benefits to consumers and enabling peak load shifting on the grid, DOE believes that requiring measurement of the energy consumed by connected features at this time may prematurely hinder the development and incorporation of such features in water heaters. While grid management programs have existed for many years, demand response capability is rapidly evolving. Therefore, DOE has tentatively determined that, at this time, any regulation on its part to address these products may harm the evolution of this market.

DOE acknowledges that storage-type water heaters are useful thermal energy storage devices that can help save consumers money and help utilities manage the grid by heating up the water in the tank during non-peak times. However, the technology required to operate within a demand response program is not available on most consumer water heaters and the available thermal energy of the tank can be determined using the already available rated storage volume metric. Further, DOE notes that a thermal energy storage metric would be most useful to utilities operating demand response programs. These utilities are regionally located and can therefore make better assumptions about water heating conditions, such as supply water temperature and ambient temperature, as compared to a national average of these conditions, which are used in the DOE test procedure. Therefore, DOE has tentatively determined not to add a thermal energy storage metric to the DOE test procedure at this time.

As DOE is not proposing test procedures specific to connected water heaters, separate definitions would not be needed to identify non-connected, connected, and disconnected water heaters.

12. Drain Down Test Method

Section 4.5 of appendix E provides the procedure for measuring the internal storage tank temperature for water heaters with a rated storage volume at or above 2 gallons. Section 4.5 of appendix E specifies that the thermocouples be inserted into the storage tank of a water heater through either the anodic device opening, the temperature and pressure relief valve, or the outlet water line. DOE has identified consumer water heaters with physical attributes that make measuring internal storage tank temperature difficult, such as water heaters that have a built-in mixing valve and no anodic device, or have a large heat exchanger that does not accommodate insertion of a thermocouple tree.

In the April 2020 RFI, DOE requested comment on whether amendments to the water heater test procedure are needed to address water heaters that cannot have their internal storage tank temperatures measured as required by the test procedure. 85 FR 21104, 21114 (April 16, 2020). In response, CA IOUs recommended that DOE not amend the test procedure to address water heaters for which it is impossible to measure internal storage tank temperatures. (CA IOUs, No. 18 at p. 4) Rheem stated its support of such amendments and recommended a drain down method, whereby the entire volume would be removed and the temperature measured at the end of the 24-hour test. (Rheem, No. 14 at p. 9) BWC agreed such amendments were necessary and suggested a framework for a procedure to address water heaters that cannot have their internal storage tank temperatures measured that would involve: (1) After the FHR test, purging the water heater with inlet water at 58 °F ±2 °F to establish the mean tank temperature at the beginning of the 24-hour simulated-use test; (2) allowing the water heater to heat up to the original thermostat setting and recording the energy used to do so; (3) running the appropriate draw pattern, then fully draining the water heater by gravity, while measuring the mass and temperature of the water; and (4) calculating the energy change as: energy change = mass × specific heat × the difference between the average end temperature and the beginning temperature just after the 58 °F purge. (BWC, No. 12 at p. 5)

Throughout the 24-hour simulated-use test, internal tank thermocouples are used to determine the mean tank temperature. Mean tank temperatures are required at the start and end of the test, the start and end of the standby period, and the after the first recovery period (*i.e.,* $\overline{T}_0$, $\overline{T}_{24}$, $\overline{T}_{su,0}$, $\overline{T}_{su,f}$, and $\overline{T}_{max,1}$, respectively). Also, an average mean tank temperature throughout the standby period is required (*i.e.,* $\overline{T}_{t,stby,1}$). The procedures recommended by BWC and Rheem could provide an estimate of the mean tank temperature at the start and end of the 24-hour simulated-use test but would not provide an estimate at the end of the first recovery period, the start and end of the standby period, or an average over the standby period. To provide for determining the mean tank temperature at each required stage, DOE proposes an amended version of the procedure suggested by BWC. DOE is proposing the following procedure for water heaters that cannot accommodate a thermocouple tree:

1. Allow the water heater to finish any recovery it is undergoing.
2. Wait 1 hour, during which time the water heater sits idle without any water draws or energy used for heating water.
3. Begin the first draw of the appropriate draw pattern. Record the inlet and outlet water temperatures 5 seconds after the initiation of the first draw. The mean tank temperature at the start of the test, $\overline{T}0$, is the average of the inlet and outlet temperature measurements.
4. At the end of the first draw, record the inlet and outlet water temperatures. The maximum mean tank temperature after the first recovery period, $\overline{T}max,1$, is the average of the inlet and outlet temperature measurements.
5. Continue with the appropriate draw pattern.
6. At the end of the last draw of the first draw cluster, record the inlet and outlet water temperatures. The mean tank temperature after the start of the standby period, $\overline{T}su,0$, is the average of the inlet and outlet temperature measurements.
7. Continue with the appropriate draw pattern.
8. Begin the first draw of the second draw cluster. Record the inlet and outlet water temperatures 5 seconds after the initiation of the first draw. The mean tank temperature at the end of the standby period, $\overline{T}su,f$, is the average of the inlet and outlet temperature measurements.
9. The average mean tank temperature over the standby period, $\overline{T}t,stby,1$, is the average of mean tank temperatures at the start and end of the standby period.
10. Continue with the appropriate draw pattern.
11. At hour 24, initiate a draw at the flow rate of the first draw of the draw pattern that the water heater was tested. The mean tank temperature at hour 24 ($\overline{T}24$) is the average of the inlet and outlet water temperatures measured 5 seconds after the start of the draw.

The proposed drain down test would estimate the mean tank temperature based on the inlet and outlet water temperature at the start or end of the draw. This assumes that the temperature of the stored water gradually (*i.e.,* linearly) increases in temperature either from the bottom of the tank to the top, or the further the water is into the heat exchanger from the water inlet, depending on the design of the water heater being tested. As the exact internal dimensions of the storage tank or heat exchanger in relation to the location of the heat source cannot be known for every water heater, the linear

assumption is the most representative of the water heater market as a whole.

13. Alternate Order 24-Hour Simulated-Use Test

In response to the April 2020 RFI, SMTI recommended that DOE move the standby loss period of the test to the beginning of the 24-hour simulated-use test and to start the first draw at the 6-hour mark, asserting that doing so would increase the accuracy and repeatability of the test, and would decrease burden by eliminating the possibility of having to extend the 24-hour simulated-use test. (SMTI, No. 19 at p. 2) SMTI further asserted that the calculation for recovery efficiency can provide an artificially low value for water heaters with high storage volume and low input rates such as heat pump water heaters. For these water heaters, SMTI stated that the first recovery period could be delayed well past the start of the test, during which time the water heater would use a significant amount of energy in standby (*e.g.,* controls and auxiliary components) and would lose a signification amount of energy through standby losses. SMTI asserted that when initiating the 24-hour simulated-use test with a 6-hour standby period, the energy use and tank temperatures for the recovery efficiency calculation would occur at 6 hours into the test (after completion of the standby period), and the recovery efficiency calculation error would be somewhat reduced based on the assumption that the first recovery would begin closer to the first draw, given that 6 hours of standby losses would have already accrued. (*Id.* at pp. 4–5)

As stated in section III.B.2.d, UA (the result of the standby period) has a negligible effect on UEF. Therefore, moving the standby period to the start of test would have a negligible effect on UEF in terms of improving the accuracy of the standby loss calculations. However, moving the standby period to the start of the test may have an effect on the recovery efficiency of large volume low input rate water heaters described by SMTI, and a large change in recovery efficiency can have a significant effect on UEF. From a review of DOE's available test data, the first recovery is rarely delayed past the first draw. If DOE were to adopt this alternate order 24-hour simulated-use test, all water heaters on the market would need to be retested. Therefore, DOE is not proposing to move the standby period to the start of the 24-hour simulated-use test, as the resulting burden to manufacturers to retest would result in a potential increase in accuracy for only a small subset of the consumer water heaters available on the market.

14. Untested Provisions

At 10 CFR 429.70, DOE specifies alternative methods for determining energy efficiency and energy use for certain covered products and equipment, including consumer water heaters.[60] In general, these provisions allow a manufacturer to determine the energy efficiency or energy use of a basic model using an alternative efficiency determination method (AEDM) in lieu of actually testing the basic model. Specific to each product or equipment type covered by these AEDM provisions, DOE defines the criteria for using an AEDM and, for some products and equipment, procedures to be used to validate an AEDM and to perform verification testing on units certified using an AEDM.

The provisions at 10 CFR 429.70(g) provide alternative methods for determining ratings for ''untested'' basic models of residential water heaters and residential-duty commercial water heaters. For models of water heaters that differ only in fuel type or power input, these provisions allow manufacturers to establish ratings for untested basic models based on the ratings of tested basic models if certain prescribed requirements are met. (Simulations or other modeling predictions or ratings of UEF, volume, first-hour rating, or maximum gallons per minute are not permitted (10 CFR 429.70(g))).

Specifically, for gas water heaters, the provisions at 10 CFR 429.70(g)(1) specify that for untested basic models of gas-fired water heaters that differ from tested basic models only in whether the basic models use natural gas or propane gas, the represented value of UEF, FHR, and maximum gallons per minute for an untested basic model can be the same as those for a tested basic model, as long as the input ratings of the tested and untested basic models are within ±10 percent.

For electric storage water heaters, the provisions at 10 CFR 429.70(g)(2) specify rating an untested basic model using the FHR and the UEF obtained from a tested basic model as a basis for ratings of basic models with other input ratings, provided that certain conditions are met: (1) Each heating element of the untested basic model is rated at or above the input rating for the corresponding heating element of the tested basic model; and (2) for an untested basic model having any heating element with an input rating that is lower than that of the corresponding heating element in the tested basic model, the FHR for the untested basic model must result in the same draw pattern specified in Table I of appendix E for the simulated-use test as was applied to the tested basic model.[61] 10 CFR 429.70(g)(2)(i)–(ii)

As discussed previously, for certain products or equipment types for which the use of an AEDM is authorized, DOE prescribes procedures to be used to validate the AEDM and/or to perform verification testing on units certified using an AEDM. For consumer water heaters, however, DOE does not currently prescribe procedures to validate the alternative rating method or to perform verification testing of untested basic models that are certified using the provisions at 10 CFR 429.70(g).

The following sections discuss representations of the FHR value of certain untested models; consideration of extending the alternative rating method to electric instantaneous type water heaters; and proposed methods for verifying the ratings of untested models of water heaters.

a. Representations of FHR

As discussed previously, the provisions at 10 CFR 429.70(g) allow for an untested electric storage water heater basic model with element wattages less than a tested basic model to use the FHR of the tested basic model, provided that the untested basic model's FHR is in the same draw pattern as the tested basic model. For an untested basic model with an element wattage that is lower than the tested basic model's, the tested FHR of the untested basic model will generally be less than the FHR of the tested basic model. In such cases, using the tested basic model's FHR to represent the untested model's FHR may not be as representative as using the FHR value directly determined from the untested model (the FHR of the untested basic model is determined pursuant to the procedures in appendix E specifically for the purpose of allowing use of the tested basic model's UEF rating). Instead, using the untested basic model's measured FHR for

[60] Section 429.71 uses the term ''residential'', which is synonymous with the use of the term ''consumer'' in this document.

[61] To establish whether this condition is met, the provisions at 10 CFR 429.70(g)(2)(ii) specify determining the FHR for the tested and the untested basic models in accordance with the procedure described in section 5.3.3 of 10 CFR part 430, subpart B, appendix E, and then comparing the appropriate draw pattern specified in Table I of appendix E for the FHR of the tested basic model with that for the untested basic model. If this condition is not met, then the untested basic model must be tested and the appropriate sampling provisions applied to determine its UEF in accordance with appendix E.

representation purposes, rather than the tested model's FHR (as currently required), could increase the representativeness of the certified FHR, while potentially not increasing burden on the manufacturer. DOE, therefore, is requesting comment on the potential to revise the existing provisions at 10 CFR 429.70(g)(2)(ii) for electric storage water heaters with element wattages less than the tested basic model to require that the represented FHR of the untested model be the untested basic model's FHR as determined according to the procedures at appendix E. Specifically, DOE is seeking information on whether manufacturers collect sufficient data to establish a rated value of FHR based on FHR testing for untested basic models, subject to the sampling plan requirements at 10 CFR 429.17 (*i.e.,* whether manufacturers currently measure the FHR of at least two units of an untested basic model to ensure it is in the same draw pattern bin as the tested model).

As discussed in section III.C.14.b, DOE is proposing to adopt provisions for rating untested electric instantaneous water heaters in a manner similar to that currently allowed for electric storage water heaters. Correspondingly, DOE is also requesting comment on a proposal to require, for untested models of electric instantaneous water heaters with an input rating less than the tested model, that the represented maximum GPM value for the untested model be the actual value as determined for the untested model according to appendix E and the sampling plan requirements at 10 CFR 429.17. The represented UEF of the untested model still would match that of the tested basic model.

Should DOE amend the method for determining the represented value of FHR or maximum GPM for certain untested basic models of electric water heaters, such a change could be required beginning with the annual filing of certification reports following the effective date of any change. Manufacturers of consumer water heaters are required to submit an annual filing for covered basic models by May 1 of each year. 10 CFR 429.12(d).

b. Alternative Rating Method for Instantaneous Water Heaters

As described previously, the provisions at 10 CFR 429.70(g) allow manufacturers to apply ratings for a tested basic model to untested basic models of gas water heaters and electric storage water heaters if certain prescribed requirements are met. In response to the April 2020 RFI, A.O. Smith suggested that DOE consider extending the untested provisions in 10 CFR 429.70(g) to consumer and residential-duty electric instantaneous water heaters. (A.O. Smith, No. 20 at p. 5)

As discussed, untested electric storage water heater basic models are currently allowed to use the same FHR and UEF rating as a tested basic model, provided that one of the following two criteria are met: (1) Each heating element of the untested basic model is rated at or above the input rating for the corresponding heating element of the tested basic model; or (2) a tested FHR for the untested basic model with a lower input rating must result in the same draw pattern as the tested basic model. 10 CFR 429.70(g)(2).

Regarding the first criteria, the untested provisions for electric storage water heaters at 10 CFR 429.70(g)(2) allow an untested basic model to be rated the same as a tested basic model if each heating element of the untested basic model is rated at or above the input rating for the corresponding heating element of the tested basic model. DOE notes that as the input rate of a water heater increases, so too does the amount of hot water that it can deliver; and the more hot water the water heater can deliver, the higher the draw pattern that is required during the 24-hour simulated-use test. In general, for a given water heater, a higher draw pattern correlates with higher UEF results; conversely, a smaller draw pattern corresponds with lower UEF results. (DOE has found through its own testing that this trend holds for electric instantaneous water heaters in addition to storage water heaters.) As a result, higher input rates generally correlate with higher UEF values. Because higher input rates generally correlate with higher UEF values (due to a change in draw pattern, as described), an untested basic model with an input rate higher than the tested basic model is generally considered to be conservatively rated.

Regarding the second criteria, the untested provisions for electric storage water heaters at 10 CFR 429.70(g)(2) allow an untested basic model to be rated the same as a tested basic model if any heating element has in input rating lower than that of the corresponding heating element in the tested basic model and the tested FHR for the untested basic model results in the same draw pattern as that of the tested basic model.[62] This requirement ensures that the UEF rating applied to the untested basic model is representative.

Because instantaneous water heaters exhibit the same trends in performance that justify the use of an alternative rating determination method for electric storage water heaters, DOE has tentatively determined that extending the use of the untested provisions to electric instantaneous water heaters in 10 CFR 429.70(g) would maintain a representative rating of these products' energy efficiency, while reducing manufacturer burden. Therefore, DOE is proposing to permit use of the untested provisions for electric instantaneous water heaters through newly proposed provisions at 10 CFR 429.70(g)(3). DOE is proposing that the criteria that currently apply to electric storage water heaters at 10 CFR 429.70(g)(2) would apply to electric instantaneous type water heaters at 10 CFR 429.70(g)(3), with the exceptions that: (1) The criteria for electric instantaneous water heaters would reference the maximum GPM rather than the FHR, as FHR applies only to storage water heaters; and (2) the criteria for electric instantaneous water heaters would reference the ''input rate'' rather than the ''heating element'' or ''input rating for the corresponding heating element''.

DOE has tentatively determined that extending the untested provisions in 10 CFR 429.70(g) to electric instantaneous water heaters would reduce manufacturer burden, as many basic models would not require testing, while maintaining an accurate representation of these products actual efficiency. Therefore, DOE is proposing to permit use of the untested provisions for electric instantaneous water heaters. DOE seeks comment on the proposal to establish provisions for rating untested basic models of electric instantaneous water heaters at 10 CFR 420.70(g)(3) that are analogous to the existing provisions for rating untested basic models of electric storage water heaters at 10 CFR 429.70(g)(2).

D. Reporting

Manufacturers, including importers, must use product-specific certification templates[63] to certify compliance to DOE. For consumer water heaters, the certification template reflects the general certification requirements specified at 10 CFR 429.12 and the product-specific requirements specified at 10 CFR 429.17. As discussed in the previous paragraphs, DOE is not proposing to amend the product-specific

[62] Determining the applicable draw pattern for an untested model in this case requires performing the FHR test on the untested model and determining the draw pattern using Table I in section 5.4.1 of appendix E.

[63] DOE's product-specific certification templates are available at: *www.regulations.doe.gov/ccms/templates.*

certification requirements for these products.

E. Test Procedure Costs and Harmonization

1. Test Procedure Costs and Impact

In this NOPR, DOE proposes to amend the existing test procedure for consumer and residential-duty commercial water heaters by adding procedures to test water heaters designed to be used with a separately sold hot water storage tank, to test the newly defined low temperature water heaters, and to estimate the internal stored water temperature for water heater designs in which the internal tank temperature cannot be directly measured. DOE also proposes to amend the existing test procedure for consumer and residential-duty commercial water heaters by modifying the flow rate requirements during the FHR test for water heaters with a rated storage volume less than 20 gallons; the timing of the first measurement in each draw of the 24-hour simulated-use test; and the test condition specifications and tolerances, including electric supply voltage tolerance, ambient temperature, ambient dry bulb temperature, ambient relative humidity, standard temperature and pressure definition, gas supply pressure, and manifold pressure. DOE has tentatively determined that these proposed amendments would impact testing costs as discussed in the following paragraphs.

a. Water Heaters Requiring a Separately Sold Hot Water Storage Tank

DOE proposes to add procedures to test water heaters that are designed to be used with a separately sold hot water storage tank. These products raise the temperature of inlet water by less than the required temperature rise specified in sections 2.3 through 2.5 of appendix E and therefore require a storage volume (either a tank or circulation loop of sufficient size) to raise the temperature of the water to levels required by appendix E. Under the proposed procedures, the manufacturer, or third-party testing facility, would need to install the water heater with an 80-gallon unfired hot water storage tank which meets the energy conservation standard requirements at 10 CFR 431.110(a). DOE estimates that the cost of running the test procedure should be the same as testing a comparable water heater with storage volume (*i.e.,* testing a fossil fuel-fired or electric storage water heater would cost approximately $3,000 and testing an electric storage water heater which uses heat pump technology would cost approximately $4,500). In addition to the test cost, the manufacturer, or third-party testing facility, would have a one-time purchase of an unfired hot water storage tank which are commercially available for approximately $900.

DOE has tentatively determined that the proposed amendment regarding water heaters that are designed to be used with a separately sold hot water storage tank allow for these products to be tested to the DOE test procedure for consumer and residential-duty commercial water heaters. Such testing would be required should the proposed amendments be finalized.

DOE requests comment on the impact and associated costs of this proposed amendment.

b. Water Heaters That Cannot Have Their Internal Tank Temperature Measured

DOE proposes to add procedures to appendix E to estimate the internal stored water temperature for water heater designs in which the internal tank temperature cannot be directly measured. These products have a rated storage volume greater than or equal to 2 gallons and are required to have the internal tank temperature measured as specified in section 4.5 of appendix E. However, these products are designed in such a way that instruments for measuring the internal water temperature cannot be installed. These products cannot be tested to the current version of appendix E. DOE estimates that the cost of running the test procedure should be the same as testing a comparable water heater with storage volume (*i.e.,* testing a fossil fuel-fired or electric storage water heater would cost approximately $3,000).

DOE requests comment on the impact and associated costs of this proposed amendment.

c. Additional Amendments

DOE does not anticipate that the remainder of the amendments proposed in this NOPR would impact test costs.

DOE proposes to amend section 2.5 of appendix E to allow low temperature water heaters to deliver water at their maximum outlet temperature that they are capable of. This proposal aligns with DOE's understanding of how these products are tested currently. As discussed in section III.C.7, manufacturers already should have requested a waiver for these products as the current test procedure cannot be used as written to test low temperature water heaters. As these products are currently tested and rated to the procedures which DOE is proposing, there should be no additional cost associated with this proposed change.

DOE also proposes to amend the existing test procedure for consumer and residential-duty commercial water heaters by modifying the flow rate requirements during the FHR test for water heaters with a rated storage volume less than 20 gallons. This change does not significantly affect the test results of the FHR test, thus DOE expects that manufacturers may rely on existing test data where available. Further, water heaters with less than 20 gallons of rated storage volume currently do not have energy conservation standards codified at 10 CFR 430.32(d) and are therefore not rated and certified to DOE.

DOE also proposes to amend the timing of the first measurement in each draw of the 24-hour simulated-use test and the test condition specifications and tolerances, including electric supply voltage tolerance, ambient temperature, ambient dry bulb temperature, ambient relative humidity, standard temperature and pressure definition, gas supply pressure, and manifold pressure. These changes are intended to reduce retesting associated with having a single measurement out of tolerance, while maintaining the current representativeness of the test conditions and the stringency of the tolerances for the test conditions.

DOE has tentatively determined that manufacturers would be able to rely on data generated under the current test procedure should any of these additional proposed amendments be finalized.

2. Harmonization With Industry Standards

DOE's established practice is to adopt relevant industry standards as DOE test procedures unless such methodology would be unduly burdensome to conduct or would not produce test results that reflect the energy efficiency, energy use, water use (as specified in EPCA) or estimated operating costs of that product during a representative average use cycle or period of use. Section 8(c) of appendix A of part 430 subpart C. In cases where the industry standard does not meet EPCA statutory criteria for test procedures, DOE will make modifications to these standards and adopt the modified standard as the DOE test procedure through the rulemaking process.

The test procedures for consumer water heaters at appendix E incorporate by reference ASHRAE 41.1–1986 (RA 2006), which describes the standard methods for temperature measurement, and ASTM D2156–09, which describes

a test method for measuring the smoke density in flue gasses for burning distillate fuels. The industry standards DOE proposes to incorporate by reference via amendments described in this NOPR are discussed in further detail in section III.B. DOE requests comments on the benefits and burdens of the proposed updates and additions to industry standards referenced in the test procedure for consumer water heaters.

DOE notes that ASHRAE 41.1–1986 (RA 2006) and ASTM D2156–09 are incorporated by reference without modification.

In the April 2020 RFI, DOE discussed the possibility of adopting a finalized draft of ASHRAE 118.2, which in its drafted state is similar to appendix E. 85 FR 21104, 21109 (Apr. 16, 2020). A detailed discussion of the differences between the March 2019 ASHRAE Draft 118.2, the April 2021 ASHRAE Draft 118.2, and appendix E can be found in section III.B.2. In response to the April 2020 RFI, AHRI recommended adopting ASHRAE 118.2 once it is finalized and stated that as a user of the standard, DOE would define the specific test conditions. (AHRI, No. 17 at p. 3) The CA IOUs, CEC, CSA, Keltech, and NEEA supported adoption of ASHRAE 118.2 once updated. (CA IOUs, No. 18 at p. 3; CEC, No. 11 at pp. 2–3; CSA, No. 10 at p. 2; Keltech, No. 7 at p. 1; NEEA, No. 21 at p. 5) As discussed throughout section III.B.2, DOE has proposed certain changes to appendix E that have been presented in the March 2019 ASHRAE Draft 118.2 and April 2021 ASHRAE Draft 118.2. However, several changes presented in the March 2019 ASHRAE Draft 118.2 and January 2021 ASHRAE Draft 118.2 are either not proposed by DOE or are proposed by DOE with modification. In particular, DOE does not propose to scale the last draw of the FHR test (section III.B.2.c), to require a 6 hour standby period (section III.B.2.d), or to use the draft ASHRAE method for the last hour of the test regardless of whether the standby period occurred between draw clusters 1 and 2 or at the end of the test (section III.B.2.d). Further, DOE proposes the following amendments to appendix E, which are not included in either the March 2019 ASHRAE Draft 118.2 or the April 2021 ASHRAE Draft 118.2: Updated test conditions and tolerances (section III.C.3); new definitions and test procedures for low temperature water heaters (section III.C.7); test procedures for heat pump only water heaters (section III.C.8.c), test procedures for circulating water heaters (section III.C.9); and test procedures for a drain down test method (section III.C.12). To reduce confusion due to the differences between the proposed appendix E and the March 2019 ASHRAE Draft 118.2 and April 2021 ASHRAE Draft 118.2, DOE has tentatively determined not to incorporate by reference a finalized version of ASHRAE 118.2 without modification. Rather, DOE proposes to incorporate by reference a finalized ASHRAE 118.2 (contingent on the finalized update being substantively the same as the current draft made available for review) but only reference specific parts of the finalized ASHRAE 118.2 within appendix E (*e.g.,* Annex B as discussed in section III.C.3.b).

F. Compliance Date and Waivers

EPCA prescribes that, if DOE amends a test procedure, all representations of energy efficiency and energy use, including those made on marketing materials and product labels, must be made in accordance with that amended test procedure beginning 180 days after publication of such a test procedure final rule in the **Federal Register**. (42 U.S.C. 6293(c)(2); 42 U.S.C. 6314(d)(1)) To the extent the modified test procedure proposed in this document is required only for the evaluation and issuance of updated efficiency standards, use of the modified test procedure, if finalized, would not be required until the implementation date of updated standards. Section 8(d) of appendix A part 430 subpart C.

If DOE were to publish an amended test procedure, EPCA provides an allowance for individual manufacturers to petition DOE for an extension of the 180-day period if the manufacturer may experience undue hardship in meeting the deadline. (42 U.S.C. 6293(c)(3); 42 U.S.C. 6314(d)(2)) To receive such an extension, petitions must be filed with DOE no later than 60 days before the end of the 180-day period and must detail how the manufacturer will experience undue hardship. (*Id.*)

Upon the compliance date of test procedure provisions of an amended test procedure, should DOE issue a such an amendment, any waivers that had been previously issued and are in effect that pertain to issues addressed by such provisions are terminated. 10 CFR 430.27(h)(3); 10 CFR 431.401(h)(3). Recipients of any such waivers would be required to test the products subject to the waiver according to the amended test procedure as of the compliance date of the amended test procedure. The amendments proposed in this document pertain to issues addressed by waivers granted to Bradford White Corporation (Case No. 2019–006).

On January 31, 2020, DOE published a Notice of Decision and Order in the **Federal Register** granting Bradford White Corporation a waiver for a specified basic model that experiences the first cut-out of the 24-hour simulated-use test during a draw. 85 FR 5648. The Decision and Order requires Bradford White Corporation to use an alternate test procedure that DOE determined more accurately calculates the recovery efficiency when the first cut-out occurs during a draw. *Id.* at 85 FR 5651. DOE has tentatively determined that the alternate test procedure is representative of real-world use conditions for the basic model specified in the Decision and Order. In the April 2020 RFI, DOE requested feedback on whether the test procedure waiver approach is generally appropriate for testing basic models with these features. 85 FR 21104, 21114 (April 16, 2020). AHRI, A.O. Smith, and BWC commented that the test procedure waiver approach is appropriate for testing basic models with the specified features and that the waiver test procedure should be incorporated into the current rule making so that it may be utilized more broadly. (AHRI, No. 17 at p. 12; A.O. Smith, No. 20 at p. 5; BWC, No. 12 at pp. 5–6) AHRI pointed out that the Bradford White Corporation test procedure waiver is implemented in ASHRAE 118.2 and must be adopted by DOE. (AHRI, No. 17 at p. 12)

As a result, and as also discussed in section III.B.2.d, DOE is proposing to adopt the alternate test procedure prescribed in the Decision and Order granted to Bradford White Corporation into the test procedure at appendix E.

IV. Procedural Issues and Regulatory Review

A. Review Under Executive Order 12866

The Office of Management and Budget (OMB) has determined that this test procedure rulemaking does not constitute a ''significant regulatory action'' under section 3(f) of Executive Order (E.O.) 12866, Regulatory Planning and Review, 58 FR 51735 (Oct. 4, 1993). Accordingly, this action was not subject to review under the Executive order by the Office of Information and Regulatory Affairs (OIRA) in OMB.

B. Review Under the Regulatory Flexibility Act

The Regulatory Flexibility Act (5 U.S.C. 601 *et seq.*) requires preparation of an initial regulatory flexibility analysis (IRFA) for any rule that by law must be proposed for public comment, unless the agency certifies that the rule, if promulgated, will not have a significant economic impact on a substantial number of small entities. As

required by Executive Order 13272, ''Proper Consideration of Small Entities in Agency Rulemaking,'' 67 FR 53461 (August 16, 2002), DOE published procedures and policies on February 19, 2003, to ensure that the potential impacts of its rules on small entities are properly considered during the DOE rulemaking process. 68 FR 7990. DOE has made its procedures and policies available on the Office of the General Counsel's website: *www.energy.gov/gc/office-general-counsel.* DOE reviewed this proposed rule under the provisions of the Regulatory Flexibility Act and the policies and procedures published on February 19, 2003.

The following sections detail DOE's IRFA for this test procedure rulemaking.

1. Description of Reasons Why Action Is Being Considered

DOE is proposing to amend test procedures for consumer water heaters and residential-duty commercial water heaters. DOE is publishing this NOPR in satisfaction of the 7-year review requirement specified in EPCA. (42 U.S.C. 6293(b)(1)(A); 6314(a)(1)) Further, amending test procedures for consumer and residential-duty commercial water heaters assists DOE in fulfilling its statutory deadline for amending energy conservation standards for products and equipment that achieve the maximum improvement in energy efficiency that is technologically feasible and economically justified. (42 U.S.C. 6295(o)(2)(A); 42 U.S.C. 6313(a)(6)) Additionally, amending test procedures for consumer and residential-duty commercial water heaters allows manufacturers to produce measurements of energy efficiency that are representative of an average use cycle and uniform for all manufacturers.

2. Objectives of, and Legal Basis for, Rule

DOE has undertaken this proposed rulemaking pursuant to 42 U.S.C. 6292(a)(4) and 42 U.S.C. 6312(a), which authorizes DOE to regulate the energy efficiency of a number of consumer products and certain industrial equipment, including the consumer and residential-duty commercial water heaters that are the subject of this proposed rulemaking.

3. Description and Estimate of Small Entities Regulated

For manufacturers of consumer water heaters and residential-duty commercial water heaters, the SBA has set a size threshold, which defines those entities classified as ''small businesses'' for the purposes of the statute. DOE used the SBA's small business size standards to determine whether any small entities would be subject to the requirements of the rule. (*See* 13 CFR part 121.) The size standards are listed by North American Industry Classification System (''NAICS'') code and industry description and are available at: *www.sba.gov/document/support—table-size-standards.* Manufacturing of consumer water heaters and residential-duty commercial water heaters is classified under NAICS 335220, ''Major Household Appliance Manufacturing.'' The SBA sets a threshold of 1,500 employees or fewer for an entity to be considered as a small business for this category. DOE used available public information to identify potential small manufacturers. DOE accessed CCMS,[64] the certified product directory of the AHRI[65], company websites, and manufacturer literature to identify companies that import, private label, or produce the consumer water heaters and residential-duty commercial water heaters covered by this proposal. Using these sources, DOE identified a total of 31 manufacturers of consumer water heaters and residential-duty commercial water heaters.

Of the proposals in this NOPR, two amendments could potentially lead to additional costs for manufacturers:

- Defining the use of a separate unfired hot water storage tank for testing water heaters designed to operate with a separately sold hot water storage tank.
- Adding procedures for estimating internal stored water temperature for water heater designs in which the internal tank temperature cannot be directly measured.

After reviewing models in the CCMS and AHRI Directory for the 31 manufacturers, DOE identified six companies that could incur additional testing costs as result of the proposed test procedures amendments. Of the six companies, one is a small domestic manufacturer that could incur costs as a result of the proposed test procedure amendments. The small domestic manufacturer offers one model in which the internal tank temperature cannot be directly measured.

4. Description and Estimate of Compliance Requirements

In this NOPR, DOE evaluates a range of potential test procedure amendments. One amendment could lead to additional testing costs for small business. The existing DOE test procedure does not accommodate testing of water heaters that require a separately sold hot water storage tank to properly operate. Such products are currently available on the market.

DOE proposes to add procedures to test such water heaters to improve the representativeness of the test procedure. Under the proposed amendments, the testing facility would need to install the water heater with a commonly available 80-gallon unfired hot water storage tank which meets the energy conservation standard requirements at 10 CFR 431.110(a). DOE estimates that the cost of running the amended test procedure should be the same as testing a comparable water heater with storage volume (*i.e.,* third-party testing of a fossil fuel-fired or electric storage water heater would cost approximately $3,000 and third-party testing of an electric storage water heater which uses heat pump technology would cost approximately $4,500). If a small manufacturer chose to perform in-house testing rather than use a third-party, the unfired hot water storage tank is commercially available for approximately $900.

The one domestic small manufacturer has a single model that would be affected by this amendment. DOE expects the cost to re-test that model to be $4,500. This is less than 0.01% of company revenue.

DOE requests comment of the cost impacts to small business of the test procedure change to accommodate testing of water heaters that require a separately sold hot water storage tank.

5. Duplication, Overlap, and Conflict With Other Rules and Regulations

DOE is not aware of any rules or regulations that duplicate, overlap, or conflict with the rule being considered today.

6. Significant Alternatives to the Rule

The discussion in the previous section analyzes impacts on small businesses that would result from DOE's proposed test procedure, if finalized. In reviewing alternatives to the proposed test procedure, DOE examined not establishing a performance-based test procedure for consumer and residential-duty commercial water heaters or establishing prescriptive-based test procedures. While not establishing performance-based test procedures or establishing prescriptive-based test procedures for consumer and residential-duty commercial water heaters would reduce the burden on small businesses, DOE must use test procedures to determine whether the

[64] U.S. Department of Energy Compliance Certification Management System, available at: *www.regulations.doe.gov/ccms.*

[65] AHRI Directory of Certified Product Performance, available at: *www.ahridirectory.org/Search/SearchHome.*

products comply with relevant standards promulgated under EPCA. (42 U.S.C. 6295(s)) Because establishing performance-based test procedures for consumer and residential-duty commercial water heaters is necessary prior to establishing performance-based energy conservation standards, DOE tentatively concludes that establishing performance-based test procedures, as proposed in this NOPR, supports DOE's authority to achieve the maximum improvement in energy efficiency that is technologically feasible and economically justified. (42 U.S.C. 6295(o)(2)(A); 42 U.S.C. 6313(a)(6)(A)(ii)(II))

The Department has tentatively determined that there are no better alternatives than the test procedures amendments proposed in this NOPR, in terms of both meeting the agency's objectives and reducing burden. Additionally, manufacturers subject to DOE's test procedures may apply to DOE's Office of Hearings and Appeals for exception relief under certain circumstances. Manufacturers should refer to 10 CFR part 430, subpart E, and 10 CFR part 1003 for additional details.

DOE seeks comments on these findings related to significant alternative related to small entities.

C. Review Under the Paperwork Reduction Act of 1995

Manufacturers of consumer and commercial water heaters must certify to DOE that their products comply with any applicable energy conservation standards. To certify compliance, manufacturers must first obtain test data for their products according to the DOE test procedures, including any amendments adopted for those test procedures. DOE has established regulations for the certification and recordkeeping requirements for all covered consumer products and commercial equipment, including consumer and commercial water heaters. (*See generally* 10 CFR part 429.) The collection-of-information requirement for the certification and recordkeeping is subject to review and approval by OMB under the Paperwork Reduction Act (PRA). This requirement has been approved by OMB under OMB control number 1910–1400. Public reporting burden for the certification is estimated to average 35 hours per response, including the time for reviewing instructions, searching existing data sources, gathering and maintaining the data needed, and completing and reviewing the collection of information.

Notwithstanding any other provision of the law, no person is required to respond to, nor shall any person be subject to a penalty for failure to comply with, a collection of information subject to the requirements of the PRA, unless that collection of information displays a currently valid OMB Control Number.

D. Review Under the National Environmental Policy Act of 1969

In this NOPR, DOE proposes test procedure amendments that DOE expects will be used to develop and implement future energy conservation standards for consumer water heaters. DOE has determined that this rule falls into a class of actions that are categorically excluded from review under the National Environmental Policy Act of 1969 (42 U.S.C. 4321 *et seq.*) and DOE's implementing regulations at 10 CFR part 1021. Specifically, DOE has determined that adopting test procedures for measuring energy efficiency of consumer products and industrial equipment is consistent with activities identified in 10 CFR part 1021, appendix A to subpart D, A5 and A6. Accordingly, neither an environmental assessment nor an environmental impact statement is required.

E. Review Under Executive Order 13132

Executive Order 13132, ''Federalism,'' 64 FR 43255 (Aug. 4, 1999) imposes certain requirements on agencies formulating and implementing policies or regulations that preempt State law or that have federalism implications. The E.O. requires agencies to examine the constitutional and statutory authority supporting any action that would limit the policymaking discretion of the States and to carefully assess the necessity for such actions. The E.O. also requires agencies to have an accountable process to ensure meaningful and timely input by State and local officials in the development of regulatory policies that have federalism implications. On March 14, 2000, DOE published a statement of policy describing the intergovernmental consultation process it will follow in the development of such regulations. 65 FR 13735. DOE has examined this proposed rule and has determined that it would not have a substantial direct effect on the States, on the relationship between the national government and the States, or on the distribution of power and responsibilities among the various levels of government. EPCA governs and prescribes Federal preemption of State regulations as to energy conservation for the products that are the subject of this proposed rule. States can petition DOE for exemption from such preemption to the extent, and based on criteria, set forth in EPCA. (42 U.S.C. 6297(d)) No further action is required by E.O. 13132.

F. Review Under Executive Order 12988

Regarding the review of existing regulations and the promulgation of new regulations, section 3(a) of E.O. 12988, ''Civil Justice Reform,'' 61 FR 4729 (Feb. 7, 1996), imposes on Federal agencies the general duty to adhere to the following requirements: (1) Eliminate drafting errors and ambiguity, (2) write regulations to minimize litigation, (3) provide a clear legal standard for affected conduct rather than a general standard, and (4) promote simplification and burden reduction. Section 3(b) of E.O. 12988 specifically requires that executive agencies make every reasonable effort to ensure that the regulation (1) Clearly specifies the preemptive effect, if any, (2) clearly specifies any effect on existing Federal law or regulation, (3) provides a clear legal standard for affected conduct while promoting simplification and burden reduction, (4) specifies the retroactive effect, if any, (5) adequately defines key terms, and (6) addresses other important issues affecting clarity and general draftsmanship under any guidelines issued by the Attorney General. Section 3(c) of E.O. 12988 requires executive agencies to review regulations in light of applicable standards in sections 3(a) and 3(b) to determine whether they are met or it is unreasonable to meet one or more of them. DOE has completed the required review and determined that, to the extent permitted by law, the proposed rule meets the relevant standards of E.O. 12988.

G. Review Under the Unfunded Mandates Reform Act of 1995

Title II of the Unfunded Mandates Reform Act of 1995 (UMRA) requires each Federal agency to assess the effects of Federal regulatory actions on State, local, and Tribal governments and the private sector. Public Law 104–4, sec. 201 (codified at 2 U.S.C. 1531). For a proposed regulatory action likely to result in a rule that may cause the expenditure by State, local, and Tribal governments, in the aggregate, or by the private sector of $100 million or more in any one year (adjusted annually for inflation), section 202 of UMRA requires a Federal agency to publish a written statement that estimates the resulting costs, benefits, and other effects on the national economy. (2 U.S.C. 1532(a), (b)) The UMRA also requires a Federal agency to develop an effective process to permit timely input by elected officers of State, local, and Tribal governments on a proposed ''significant

intergovernmental mandate,'' and requires an agency plan for giving notice and opportunity for timely input to potentially affected small governments before establishing any requirements that might significantly or uniquely affect small governments. On March 18, 1997, DOE published a statement of policy on its process for intergovernmental consultation under UMRA. 62 FR 12820; also available at *www.energy.gov/gc/office-general-counsel.* DOE examined this proposed rule according to UMRA and its statement of policy and determined that the rule contains neither an intergovernmental mandate, nor a mandate that may result in the expenditure of $100 million or more in any year, so these requirements do not apply.

H. Review Under the Treasury and General Government Appropriations Act, 1999

Section 654 of the Treasury and General Government Appropriations Act, 1999 (Pub. L. 105–277) requires Federal agencies to issue a Family Policymaking Assessment for any rule that may affect family well-being. This proposed rule would not have any impact on the autonomy or integrity of the family as an institution. Accordingly, DOE has concluded that it is not necessary to prepare a Family Policymaking Assessment.

I. Review Under Executive Order 12630

DOE has determined, under E.O. 12630, ''Governmental Actions and Interference with Constitutionally Protected Property Rights,'' 53 FR 8859 (March 18, 1988), that this proposed regulation would not result in any takings that might require compensation under the Fifth Amendment to the U.S. Constitution.

J. Review Under Treasury and General Government Appropriations Act, 2001

Section 515 of the Treasury and General Government Appropriations Act, 2001 (44 U.S.C. 3516 note) provides for agencies to review most disseminations of information to the public under guidelines established by each agency pursuant to general guidelines issued by OMB. OMB's guidelines were published at 67 FR 8452 (Feb. 22, 2002), and DOE's guidelines were published at 67 FR 62446 (Oct. 7, 2002). Pursuant to OMB Memorandum M–19–15, Improving Implementation of the Information Quality Act (April 24, 2019), DOE published updated guidelines which are available at: *www.energy.gov/sites/prod/files/2019/12/f70/DOE%20Final%20Updated%20IQA%20Guidelines%20Dec%202019.pdf.* DOE has reviewed this proposed rule under the OMB and DOE guidelines and has concluded that it is consistent with applicable policies in those guidelines.

K. Review Under Executive Order 13211

E.O. 13211, ''Actions Concerning Regulations That Significantly Affect Energy Supply, Distribution, or Use,'' 66 FR 28355 (May 22, 2001), requires Federal agencies to prepare and submit to OMB, a Statement of Energy Effects for any proposed significant energy action. A ''significant energy action'' is defined as any action by an agency that promulgated or is expected to lead to promulgation of a final rule, and that (1) is a significant regulatory action under E.O. 12866, or any successor order; and (2) is likely to have a significant adverse effect on the supply, distribution, or use of energy; or (3) is designated by the Administrator of OIRA as a significant energy action. For any proposed significant energy action, the agency must give a detailed statement of any adverse effects on energy supply, distribution, or use should the proposal be implemented, and of reasonable alternatives to the action and their expected benefits on energy supply, distribution, and use.

The proposed regulatory action to amend the test procedure for measuring the energy efficiency of consumer and commercial water heaters is not a significant regulatory action under E.O. 12866. Moreover, it would not have a significant adverse effect on the supply, distribution, or use of energy, nor has it been designated as a significant energy action by the Administrator of OIRA. Therefore, it is not a significant energy action, and, accordingly, DOE has not prepared a Statement of Energy Effects.

L. Review Under Section 32 of the Federal Energy Administration Act of 1974

Under section 301 of the Department of Energy Organization Act (Pub. L. 95–91; 42 U.S.C. 7101), DOE must comply with section 32 of the Federal Energy Administration Act of 1974, as amended by the Federal Energy Administration Authorization Act of 1977. (15 U.S.C. 788; FEAA) Section 32 essentially provides in relevant part that, where a proposed rule authorizes or requires use of commercial standards, the notice of proposed rulemaking must inform the public of the use and background of such standards. In addition, section 32(c) requires DOE to consult with the Attorney General and the Chairman of the Federal Trade Commission (FTC) concerning the impact of the commercial or industry standards on competition.

The proposed modifications to the test procedure for consumer and commercial water heaters would incorporate testing methods contained in certain sections of the following commercial standards: ASHRAE 41.1–2020, ASTM D2156–09 (RA 2018), and a finalized version of ASHRAE 118.2. DOE has evaluated these standards and is unable to conclude whether it fully complies with the requirements of section 32(b) of the FEAA (*i.e.,* whether it was developed in a manner that fully provides for public participation, comment, and review.) DOE will consult with both the Attorney General and the Chairman of the FTC concerning the impact of these test procedures on competition, prior to prescribing a final rule.

M. Description of Materials Incorporated by Reference

In this NOPR, DOE proposes to incorporate by reference the test standard published by ASHRAE, titled ''Standard Methods for Temperature Measurement,'' ASHRAE 41.1–2020; the test standard published by ANSI/ASHRAE, titled ''Standard Method for Humidity Measurement,'' Standard 41.6–2014; the test standard published by ASHRAE, titled ''Method of Testing for Rating Residential Water Heaters and Residential-Duty Commercial Water Heaters,'' ASHRAE 118.2-[year finalized]; the test standard published by ASTM, titled ''Standard Test Method for Smoke Density in Flue Gases from Burning Distillate Fuels,'' ASTM D2156–09 (RA 2018); and, the test standard published by ASTM, titled ''Standard Test Methods for Directional Reflectance Factor, 45-Deg 0-Deg, of Opaque Specimens by Broad-Band Filter Reflectometry,'' ASTM E97–1987 (W1991).

ASHRAE 41.1–2020 prescribes methods for measuring temperature under laboratory and field conditions which are required for system performance tests and for testing heating, ventilating, air-conditioning, and refrigerating components. ASHRAE 41.6–2014 prescribes methods for measuring the humidity of moist air with instruments. ASHRAE 118.2-[year finalized] provides test procedures for rating the efficiency and hot water delivery capabilities of directly heated residential water heaters and residential-duty commercial water heaters. ASTM D2156–09 (RA 2018) provides a test method to evaluate the density of smoke in the flue gases from burning distillate fuels, is intended primarily for use with home heating

equipment burning kerosene or heating oils, and can be used in the laboratory or in the field to compare fuels for clean burning or to compare heating equipment. ASTM E97–1987 (W1991) provides a method to determinate of the 45-deg, 0-deg directional reflectance factor of nonfluorescent opaque specimens by means of filter photometers.

Copies of ASHRAE 41.1–2020, ASHRAE 41.6–2014, and ASHRAE 118.2-[year finalized] can be obtained from the American Society of Heating, Refrigerating, and Air-Conditioning Engineers, Inc., 1791 Tullie Circle NE, Atlanta, GA 30329, (800) 527–4723 or (404) 636–8400, or online at: *www.ashrae.org.*

Copies of ASTM D2156–09 (RA 2018) and ASTM E97–1987 (W1991) can be obtained from the American Society for Testing and Materials International, 100 Barr Harbor Drive, P.O. Box C700, West Conshohocken, PA 19428–2959 or online at: *www.astm.org.*

V. Public Participation

A. Participation in the Webinar

The time and date of the webinar are listed in the **DATES** section at the beginning of this document. If no participants register for the webinar, it will be cancelled. Webinar registration information, participant instructions, and information about the capabilities available to webinar participants will be published on DOE's website: *www1.eere.energy.gov/buildings/appliance_standards/standards.aspx?productid=32.* Participants are responsible for ensuring their systems are compatible with the webinar software.

B. Submission of Comments

DOE will accept comments, data, and information regarding this proposed rule no later than the date provided in the **DATES** section at the beginning of this proposed rule. Interested parties may submit comments using any of the methods described in the **ADDRESSES** section at the beginning of this document.

Submitting comments via www.regulations.gov. The *www.regulations.gov* web page will require you to provide your name and contact information. Your contact information will be viewable to DOE Building Technologies staff only. Your contact information will not be publicly viewable except for your first and last names, organization name (if any), and submitter representative name (if any). If your comment is not processed properly because of technical difficulties, DOE will use this information to contact you. If DOE cannot read your comment due to technical difficulties and cannot contact you for clarification, DOE may not be able to consider your comment.

However, your contact information will be publicly viewable if you include it in the comment or in any documents attached to your comment. Any information that you do not want to be publicly viewable should not be included in your comment, nor in any document attached to your comment. Persons viewing comments will see only first and last names, organization names, correspondence containing comments, and any documents submitted with the comments.

Do not submit to *www.regulations.gov* information for which disclosure is restricted by statute, such as trade secrets and commercial or financial information (hereinafter referred to as Confidential Business Information (CBI)). Comments submitted through *www.regulations.gov* cannot be claimed as CBI. Comments received through the website will waive any CBI claims for the information submitted. For information on submitting CBI, see the Confidential Business Information section.

DOE processes submissions made through *www.regulations.gov* before posting. Normally, comments will be posted within a few days of being submitted. However, if large volumes of comments are being processed simultaneously, your comment may not be viewable for up to several weeks. Please keep the comment tracking number that *www.regulations.gov* provides after you have successfully uploaded your comment.

Submitting comments via email. Comments and documents submitted via email also will be posted to *www.regulations.gov.* If you do not want your personal contact information to be publicly viewable, do not include it in your comment or any accompanying documents. Instead, provide your contact information on a cover letter. Include your first and last names, email address, telephone number, and optional mailing address. The cover letter will not be publicly viewable as long as it does not include any comments.

Include contact information each time you submit comments, data, documents, and other information to DOE. No faxes will be accepted.

Comments, data, and other information submitted to DOE electronically should be provided in PDF (preferred), Microsoft Word or Excel, WordPerfect, or text (ASCII) file format. Provide documents that are not secured, written in English and free of any defects or viruses. Documents should not contain special characters or any form of encryption and, if possible, they should carry the electronic signature of the author.

Campaign form letters. Please submit campaign form letters by the originating organization in batches of between 50 to 500 form letters per PDF or as one form letter with a list of supporters' names compiled into one or more PDFs. This reduces comment processing and posting time.

Confidential Business Information. Pursuant to 10 CFR 1004.11, any person submitting information that he or she believes to be confidential and exempt by law from public disclosure should submit via email two well-marked copies: One copy of the document marked confidential including all the information believed to be confidential, and one copy of the document marked non-confidential with the information believed to be confidential deleted. DOE will make its own determination about the confidential status of the information and treat it according to its determination.

It is DOE's policy that all comments may be included in the public docket, without change and as received, including any personal information provided in the comments (except information deemed to be exempt from public disclosure).

VI. Approval of the Office of the Secretary

The Secretary of Energy has approved publication of this notice of proposed rulemaking and request for comment.

List of Subjects

10 CFR Part 429

Administrative practice and procedure, Confidential business information, Energy conservation, Household appliances, Reporting and recordkeeping requirements.

10 CFR Part 430

Administrative practice and procedure, Confidential business information, Energy conservation, Household appliances, Imports, Incorporation by reference, Intergovernmental relations, Small businesses.

10 CFR Part 431

Administrative practice and procedure, Confidential business information, Energy conservation test procedures, Incorporation by reference, Reporting and recordkeeping requirements.

Signing Authority

This document of the Department of Energy was signed on December 9, 2021, by Kelly J. Speakes-Backman, Principal Deputy Assistant Secretary for Energy Efficiency and Renewable Energy, pursuant to delegated authority from the Secretary of Energy. That document with the original signature and date is maintained by DOE. For administrative purposes only, and in compliance with requirements of the Office of the Federal Register, the undersigned DOE **Federal Register** Liaison Officer has been authorized to sign and submit the document in electronic format for publication, as an official document of the Department of Energy. This administrative process in no way alters the legal effect of this document upon publication in the **Federal Register**.

Signed in Washington, DC, on December 9, 2021.

Treena V. Garrett,

Federal Register Liaison Officer, U.S. Department of Energy.

For the reasons stated in the preamble, DOE is proposing to amend parts 429, 430, and 431 of Chapter II of Title 10, Code of Federal Regulations, as set forth below:

PART 429—CERTIFICATION, COMPLIANCE, AND ENFORCEMENT FOR CONSUMER PRODUCTS AND COMMERCIAL AND INDUSTRIAL EQUIPMENT

■ 1. The authority citation for part 429 continues to read as follows:

Authority: 42 U.S.C. 6291–6317; 28 U.S.C. 2461 note.

■ 2. Amend § 429.70 by adding paragraph (g)(3) to read as follows:

§ 429.70 Alternative methods for determining energy efficiency and energy use.

* * * * *

(g) * * *

(3) *Electric Instantaneous Water Heaters.* Rate an untested basic model of an electric instantaneous type water heater using the maximum GPM and the uniform energy factor obtained from a tested basic model as a basis for ratings of basic models with other input ratings, provided that certain conditions are met:

(i) For an untested basic model, the represented value of the maximum GPM and the uniform energy factor is the same as that of a tested basic model, provided that the untested basic model's input is rated at or above the input rating for the corresponding tested basic model.

(ii) For an untested basic model having any input rating that is lower than that of the corresponding tested basic model, the represented value of the maximum GPM and the uniform energy factor is the same as that of a tested basic model, provided that the maximum GPM for the untested basic model results in the same draw pattern specified in Table II of appendix E for the 24-hour simulated-use test as was applied to the tested basic model. To establish whether this condition is met, determine the maximum GPM for the tested and the untested basic models in accordance with the procedure described in section 5.3.2 of 10 CFR part 430, subpart B, appendix E, then compare the appropriate draw pattern specified in Table II of appendix E for the maximum GPM of the tested basic model with that for the untested basic model. If this condition is not met, then the untested basic model must be tested and the appropriate sampling provisions applied to determine its uniform energy factor in accordance with appendix E and this part.

* * * * *

■ 3. Amend § 429.134 by adding paragraph (d)(3) to read as follows:

§ 429.134 Product-specific enforcement provisions.

* * * * *

(d) * * *

(3) *Verification of fuel input rate.* The fuel input rate of each tested unit of the basic model will be measured pursuant to the test requirements of section 5.2.3 of 10 CFR part 430, subpart B, appendix E. The measured fuel input rate (either the measured fuel input rate for a single unit sample or the average of the measured fuel input rates for a multiple unit sample) will be compared to the rated input certified by the manufacturer. The certified rated input will be considered valid only if the measured fuel input rate is within ±2 percent of the certified rated input.

(i) If the certified rated input is found to be valid, then the certified rated input will be used to determine compliance with the associated energy conservation standard.

(ii) If the measured fuel input rate is not within ±2 percent of the certified rated input, the measured fuel input rate will be used to determine compliance with the associated energy conservation standard.

(iii) If the measured fuel input rate for oil-fired water heating products is not within ±2 percent of the certified rated input, the measured fuel input rate will be used to determine compliance with the associated energy conservation standard.

* * * * *

PART 430—ENERGY CONSERVATION PROGRAM FOR CONSUMER PRODUCTS

■ 4. The authority citation for part 430 continues to read as follows:

Authority: 42 U.S.C. 6291–6309; 28 U.S.C. 2461 note.

■ 5. Amend § 430.2 by adding, in alphabetical order, the definitions of ''*Circulating water heater*'', ''*Low temperature water heater*'', and ''*Tabletop water heater*'' to read as follows:

§ 430.2 Definitions.

* * * * *

Circulating water heater means an instantaneous or heat pump type water heater that does not have an operational scheme in which the burner, heating element, or compressor initiates and/or terminates heating based on sensing flow; has a water temperature sensor located at the inlet of the water heater or in a separate storage tank that is the primary means of initiating and terminating heating; and must be used in combination with a recirculating pump and either a separate storage tank or water circulation loop in order to achieve the water flow and temperature conditions recommended in the manufacturer's installation and operation instructions.

* * * * *

Low temperature water heater means an electric instantaneous water heater that is not a circulating water heater and cannot deliver water at a temperature greater than or equal to the set point temperature specified in section 2.5 of appendix E to subpart B of this part when supplied with water at the supply water temperature specified in section 2.3 of appendix E to subpart B of this part.

* * * * *

Tabletop water heater means a heater in a rectangular box enclosure designed to slide into a kitchen countertop space with typical dimensions of 36 inches high, 25 inches deep and 24 inches wide.

* * * * *

■ 6. Section 430.3 is amended by:

■ a. Revising paragraph (g)(5);

■ b. Redesignating paragraphs (g)(8) as (9);

■ c. Adding new paragraph (g)(8);

■ d. Redesignating paragraphs (g)(10) and (11), as (g)(11) and (12);

■ e. Revising newly designated paragraph (g)(12);

■ f. Redesignating paragraphs (g)(13) through (17), as (g)(14) through (18);
■ g. Redesignating paragraph (g)(19) as (20);
■ h. Adding new paragraph (g)(19);
■ i. Revising paragraph (j)(1); and
■ j. Adding paragraphs (j)(3) and (4);

The revisions and additions read as follows:

§ 430.3 Materials incorporated by reference.

* * * * *

(g) * * *

(5) ASHRAE 41.1–1986 (Reaffirmed 2006), Standard Method for Temperature Measurement, approved February 18, 1987, IBR approved for appendix AA to subpart B.

* * * * *

(8) ANSI/ASHRAE Standard 41.1–2020, (''ANSI/ASHRAE 41.1–2020''), Standard Method for Temperature Measurement, ANSI approved June 30, 2020, IBR approved for appendix E to subpart B.

* * * * *

(12) ANSI/ASHRAE Standard 41.6–2014, (''ASHRAE 41.6–2014''), Standard Method for Humidity Measurement, ANSI approved July 3, 2014, IBR approved for appendices E and F to subpart B.

* * * * *

(19) ANSI/ASHRAE Standard 118.2-[*year finalized*], (''[*ASHRAE 118.2–TBD*]''), Method of Testing for Rating Residential Water Heaters and Residential-Duty Commercial Water Heaters, ANSI approved [*date finalized*], IBR approved for appendix E to subpart B.

* * * * *

(j) * * *

(1) ASTM D2156–09, (''ASTM D2156''), Standard Test Method for Smoke Density in Flue Gases from Burning Distillate Fuels, ASTM approved December 1, 2009, IBR approved for appendix O to subpart B.

* * * * *

(3) ASTM D2156–09 (Reapproved 2018), (''ASTM D2156 (RA 2018)''), Standard Test Method for Smoke Density in Flue Gases from Burning Distillate Fuels, ASTM approved October 1, 2018, IBR approved for appendix E to subpart B.

(4) ASTM E97–1987 (Withdrawn 1991) (''ASTM E97–1987 (W1991)''), Standard Test Methods for Directional Reflectance Factor, 45-Deg 0-Deg, of Opaque Specimens by Broad-Band Filter Reflectometry, approved January 1987, IBR approved for appendix E to subpart B.

* * * * *

■ 7. Appendix E to subpart B of part 430 is revised to read as follows:

APPENDIX E TO SUBPART B OF PART 430—UNIFORM TEST METHOD FOR MEASURING THE ENERGY CONSUMPTION OF WATER HEATERS

Note: Prior to [*date 180 days after publication of the final rule in the* ***Federal Register***], representations with respect to the energy use or efficiency of consumer water heaters and commercial water heaters covered by this test method, including compliance certifications, must be based on testing conducted in accordance with either this appendix as it now appears or appendix E as it appeared at 10 CFR part 430, subpart B revised as of January 1, 2021.

On and after [*date 180 days after date of publication of the final rule in the* ***Federal Register***], representations with respect to energy use or efficiency of consumer water heaters and commercial water heaters covered by this test method, including compliance certifications, must be based on testing conducted in accordance with this appendix.

0. Incorporation by Reference

DOE incorporated by reference in § 430.3 the entire standard for: ANSI/ASHRAE 41.1–2020; ASHRAE 41.6–2014; [*ASHRAE 118.2–TBD*]; ASTM D2156 (RA 2018); and ASTM E97–1987 (W1991). However, only enumerated provisions of [*ASHRAE 118.2–TBD*] are applicable to this appendix, as follows:

(1) [*ASHRAE 118.2–TBD*]

(i) Annex B—Gas Heating Value Correction Factor;

(ii) Reserved.

1. Definitions

1.1. *Cut-in* means the time when or water temperature at which a water heater control or thermostat acts to increase the energy or fuel input to the heating elements, compressor, or burner.

1.2. *Cut-out* means the time when or water temperature at which a water heater control or thermostat acts to reduce to a minimum the energy or fuel input to the heating elements, compressor, or burner.

1.3. *Design Power Rating* means the power rating or input rate that a water heater manufacturer assigns to a particular design of water heater and that is included on the nameplate of the water heater, expressed in kilowatts or Btu (kJ) per hour as appropriate. For modulating water heaters, the design power rating is the maximum power rating or input rate that is specified by the manufacturer on the nameplate of the water heater.

1.4. *Draw Cluster* means a collection of water draws initiated during the 24-hour simulated-use test during which no successive draws are separated by more than 2 hours.

1.5. *First-Hour Rating* means an estimate of the maximum volume of ''hot'' water that a non-flow activated water heater can supply within an hour that begins with the water heater fully heated (*i.e.,* with all thermostats satisfied).

1.6. *Flow-Activated* describes an operational scheme in which a water heater initiates and terminates heating based on sensing flow.

1.7. *Heat Trap* means a device that can be integrally connected or independently attached to the hot and/or cold water pipe connections of a water heater such that the device will develop a thermal or mechanical seal to minimize the recirculation of water due to thermal convection between the water heater tank and its connecting pipes.

1.8. *Maximum GPM (L/min) Rating* means the maximum gallons per minute (liters per minute) of hot water that can be supplied by flow-activated water heater when tested in accordance with section 5.3.2 of this appendix.

1.9. *Modulating Water Heater* means a water heater that can automatically vary its power or input rate from the minimum to the maximum power or input rate specified on the nameplate of the water heater by the manufacturer.

1.10. *Rated Storage Volume* means the water storage capacity of a water heater, in gallons (liters), as certified by the manufacturer pursuant to 10 CFR part 429.

1.11. *Recovery Efficiency* means the ratio of energy delivered to the water to the energy content of the fuel consumed by the water heater.

1.12. *Recovery Period* means the time when the main burner of a water heater with a rated storage volume greater than or equal to 2 gallons is raising the temperature of the stored water.

1.13. *Standby* means the time, in hours, during which water is not being withdrawn from the water heater.

1.14. *Symbol Usage.* The following identity relationships are provided to help clarify the symbology used throughout this procedure:

C_p—specific heat of water

E_{annual}—annual energy consumption of a water heater

$E_{annual,e}$—annual electrical energy consumption of a water heater

$E_{annual,f}$—annual fossil-fuel energy consumption of a water heater

F_{hr}—first-hour rating of a non-flow activated water heater

F_{max}—maximum GPM (L/min) rating of a flow-activated water heater

i—a subscript to indicate the draw number during a test

$M_{del,i}$—mass of water removed during the ith draw of the 24-hour simulated-use test

$M_{in,i}$—mass of water entering the water heater during the ith draw of the 24-hour simulated-use test

$M^*_{del,i}$—for non-flow activated water heaters, mass of water removed during the ith draw during the first-hour rating test

$M^*_{in,i}$—for non-flow activated water heaters, mass of water entering the water heater during the ith draw during the first-hour rating test

$M_{del,10m}$—for flow-activated water heaters, mass of water removed continuously during the maximum GPM (L/min) rating test

$M_{in,10m}$—for flow-activated water heaters, mass of water entering the water heater continuously during the maximum GPM (L/min) rating test

n—for non-flow activated water heaters, total number of draws during the first-hour rating test

N—total number of draws during the 24-hour simulated-use test

N_r— number of draws from the start of the 24-hour simulated-use test to the end to the first recovery period as described in section 5.4.2

Q—total fossil fuel and/or electric energy consumed during the entire 24-hour simulated-use test

Q_d—daily water heating energy consumption adjusted for net change in internal energy

Q_{da}—Q_d with adjustment for variation of tank to ambient air temperature difference from nominal value

Q_{dm}—overall adjusted daily water heating energy consumption including Q_{da} and Q_{HWD}

Q_e—total electrical energy used during the 24-hour simulated-use test

Q_f—total fossil fuel energy used by the water heater during the 24-hour simulated-use test

Q_{hr}—hourly standby losses of a water heater with a rated storage volume greater than or equal to 2 gallons

Q_{HW}—daily energy consumption to heat water at the measured average temperature rise across the water heater

$Q_{HW,67\,°F}$—daily energy consumption to heat quantity of water removed during test over a temperature rise of 67 °F (37.3 °C)

Q_{HWD}—adjustment to daily energy consumption, $Q_{HW,}$ due to variation of the temperature rise across the water heater not equal to the nominal value of 67 °F (37.3 °C)

Q_r—energy consumption of water heater from the beginning of the test to the end of the first recovery period

Q_{stby}—total energy consumed during the standby time interval $\tau_{stby,1,}$ as determined in section 5.4.2 of this appendix

$Q_{su,0}$— cumulative energy consumption, including all fossil fuel and electrical energy use, of the water heater from the start of the 24-hour simulated-use test to the start of the standby period as determined in section 5.4.2 of this appendix

$Q_{su,f}$—cumulative energy consumption, including all fossil fuel and electrical energy use, of the water heater from the start of the 24-hour simulated-use test to the end of the standby period as determined in section 5.4.2 of this appendix

T_0—mean tank temperature at the beginning of the 24-hour simulated-use test as determined in section 5.4.2 of this appendix

$\overline{T}_{24}$—mean tank temperature at the end of the 24-hour simulated-use test as determined in section 5.4.2 of this appendix

$\overline{T}_{a,stby}$—average ambient air temperature during all standby periods of the 24-hour simulated-use test as determined in section 5.4.2 of this appendix

$\overline{T}_{a,stby,1}$—overall average ambient temperature between the start and end of the standby period as determined in section 5.4.2 of this appendix

$\overline{T}_{t,stby,1}$— overall average mean tank temperature between the start and end of the standby period as determined in section 5.4.2 of this appendix

$\overline{T}_{del}$—for flow-activated water heaters, average outlet water temperature during the maximum GPM (L/min) rating test

$\overline{T}_{del,i}$—average outlet water temperature during the *i*th draw of the 24-hour simulated-use test

$\overline{T}_{in}$—for flow-activated water heaters, average inlet water temperature during the maximum GPM (L/min) rating test

$\overline{T}_{in,i}$—average inlet water temperature during the *i*th draw of the 24-hour simulated-use test

$\overline{T}_{max,1}$—maximum measured mean tank temperature after the first recovery period of the 24-hour simulated-use test as determined in section 5.4.2 of this appendix

$\overline{T}_{su,0}$—maximum measured mean tank temperature at the beginning of the standby period as determined in section 5.4.2 of this appendix

$\overline{T}_{su,f}$—measured mean tank temperature at the end of the standby period as determined in section 5.4.2 of this appendix

$\overline{T}^*_{del,i}$—for non-flow activated water heaters, average outlet water temperature during the *i*th draw (i = 1 to n) of the first-hour rating test

$\overline{T}^*_{max,i}$—for non-flow activated water heaters, maximum outlet water temperature observed during the *i*th draw (i = 1 to n) of the first-hour rating test

$\overline{T}^*_{min,i}$—for non-flow activated water heaters, minimum outlet water temperature to terminate the *i*th draw (i = 1 to n) of the first-hour rating test

UA—standby loss coefficient of a water heater with a rated storage volume greater than or equal to 2 gallons

UEF—uniform energy factor of a water heater

V—the volume of hot water drawn during the applicable draw pattern

$V_{del,i}$—volume of water removed during the *i*th draw (i = 1 to N) of the 24-hour simulated-use test

$V_{in,i}$—volume of water entering the water heater during the *i*th draw (i = 1 to N) of the 24-hour simulated-use test

$V^*_{del,i}$—for non-flow activated water heaters, volume of water removed during the *i*th draw (i = 1 to n) of the first-hour rating test

$V^*_{in,i}$—for non-flow activated water heaters, volume of water entering the water heater during the *i*th draw (i = 1 to n) of the first-hour rating test

$V_{del,10m}$—for flow-activated water heaters, volume of water removed during the maximum GPM (L/min) rating test

$V_{in,10m}$—for flow-activated water heaters, volume of water entering the water heater during the maximum GPM (L/min) rating test

V_{st}—measured storage volume of the storage tank for water heaters with a rated storage volume greater than or equal to 2 gallons

W_f—weight of storage tank when completely filled with water for water heaters with a rated storage volume greater than or equal to 2 gallons

W_t—tare weight of storage tank when completely empty of water for water heaters with a rated storage volume greater than or equal to 2 gallons

η_r—recovery efficiency

ρ—density of water

$\tau_{stby,1}$—elapsed time between the start and end of the standby period as determined in section 5.4.2 of this appendix

$\tau_{stby,2}$—overall time of standby periods when no water is withdrawn during the 24-hour simulated-use test as determined in section 5.4.2 of this appendix

1.15. *Temperature controller* means a device that is available to the user to adjust the temperature of the water inside a water heater that stores heated water or the outlet water temperature.

1.16. *Uniform Energy Factor* means the measure of water heater overall efficiency.

1.17. *Water Heater Requiring a Storage Tank* means a water heater without a storage tank specified or supplied by the manufacturer that cannot meet the requirements of sections 2 and 5 of this appendix without the use of a storage water heater or unfired hot water storage tank.

2. Test Conditions

2.1 *Installation Requirements.* Tests shall be performed with the water heater and instrumentation installed in accordance with section 4 of this appendix.

2.2 *Ambient Air Temperature and Relative Humidity.*

2.2.1 *Non-Heat Pump Water Heaters.* The ambient air temperature shall be maintained between 65.0 °F and 70.0 °F (18.3 °C and 21.1 °C) on a continuous basis.

2.2.2 *Heat Pump Water Heaters.* The dry bulb temperature shall be maintained at an average of 67.5 °F ±1 °F (19.7 °C ±0.6 °C) after a cut-in and before the next cut-out, an average of 67.5 °F ±2.5 °F (19.7 °C ±1.4 °C) after a cut-out and before the next cut-in, and at 67.5 °F ±5 °F (19.7 °C ±2.8 °C) on a continuous basis throughout the test. The relative humidity shall be maintained within a range of 50% ±5% throughout the test, and at an average of 50% ±2% after a cut-in and before the next cut-out.

When testing a split-system heat pump water heater or heat pump water heater requiring a storage tank, the heat pump portion of the system shall be tested at the conditions within this section and the separate water heater or unfired hot water storage tank shall be tested at either the conditions within this section or the conditions specified in section 2.2.1 of this appendix.

2.3 *Supply Water Temperature.* The temperature of the water being supplied to the water heater shall be maintained at 58 °F ±2 °F (14.4 °C ±1.1 °C) throughout the test.

2.4 *Outlet Water Temperature.* The temperature controllers of a non-flow activated water heater shall be set so that water is delivered at a temperature of 125 °F ±5 °F (51.7 °C ±2.8 °C).

2.5 *Set Point Temperature.* The temperature controller of a flow-activated water heater shall be set to deliver water at a temperature of 125 °F ±5 °F (51.7 °C ±2.8 °C). If the flow-activated water heater is not capable of delivering water at a temperature of 125 °F ±5 °F (51.7 °C ±2.8 °C) when supplied with water at the supply water temperature specified in section 2.3 of this appendix, then the flow-activated water

heater shall be set to deliver water at its maximum water temperature.

2.6 *Supply Water Pressure.* During the test when water is not being withdrawn, the supply pressure shall be maintained between 40 psig (275 kPa) and the maximum allowable pressure specified by the water heater manufacturer.

2.7 *Electrical and/or Fossil Fuel Supply.*

2.7.1 *Electrical.* Maintain the electrical supply voltage to within ±2% of the center of the voltage range specified on the nameplate of the water heater by the water heater and/or heat pump manufacturer, from 5 seconds after a cut-in to 5 seconds before next cut-out.

2.7.2 *Natural Gas.* Maintain the supply pressure in accordance with the supply pressure specified on the nameplate of the water heater by the manufacturer. If the supply pressure is not specified, maintain a supply pressure of 7–10 inches of water column (1.7–2.5 kPa). If the water heater is equipped with a gas appliance pressure regulator and the gas appliance pressure regulator can be adjusted, the regulator outlet pressure shall be within the greater of ±10% of the manufacturer's specified manifold pressure, found on the nameplate of the water heater, or ±0.2 inches water column (0.05 kPa). Maintain the gas supply pressure and manifold pressure only when operating at the design power rating. For all tests, use natural gas having a heating value of approximately 1,025 Btu per standard cubic foot (38,190 kJ per standard cubic meter).

2.7.3 *Propane Gas.* Maintain the supply pressure in accordance with the supply pressure specified on the nameplate of the water heater by the manufacturer. If the supply pressure is not specified, maintain a supply pressure of 11–13 inches of water column (2.7–3.2 kPa). If the water heater is equipped with a gas appliance pressure regulator and the gas appliance pressure regulator can be adjusted, the regulator outlet pressure shall be within the greater of ±10% of the manufacturer's specified manifold pressure, found on the nameplate of the water heater, or ±0.2 inches water column (0.05 kPa). Maintain the gas supply pressure and manifold pressure only when operating at the design power rating. For all tests, use propane gas with a heating value of approximately 2,500 Btu per standard cubic foot (93,147 kJ per standard cubic meter).

2.7.4 *Fuel Oil Supply.* Maintain an uninterrupted supply of fuel oil. The fuel pump pressure shall be within ±10% of the pump pressure specified on the nameplate of the water heater or the installation and operations (I&O) manual by the manufacturer. Use fuel oil having a heating value of approximately 138,700 Btu per gallon (38,660 kJ per liter).

3. Instrumentation.

3.1 *Pressure Measurements.* Pressure-measuring instruments shall have an error no greater than the following values:

Item measured	Instrument accuracy	Instrument precision
Gas pressure	±0.1 inch of water column (±0.025 kPa)	±0.05 inch of water column (±0.012 kPa).
Atmospheric pressure	±0.1 inch of mercury column (±0.34 kPa)	±0.05 inch of mercury column (±0.17 kPa).
Water pressure	±1.0 pounds per square inch (±6.9 kPa)	±0.50 pounds per square inch (±3.45 kPa).

3.2 *Temperature Measurement*

3.2.1 *Measurement.* Temperature measurements shall be made in accordance with the Standard Method for Temperature Measurement, ASHRAE 41.1–2020, including the conditions as specified in ASHRAE 41.6–2014 as referenced in ASHRAE 41.1–2020, and excluding the steady-state temperature criteria in section 5.5 of ASHRAE 41.1–2020.

3.2.2 *Accuracy and Precision.* The accuracy and precision of the instruments, including their associated readout devices, shall be within the following limits:

Item measured	Instrument accuracy	Instrument precision
Air dry bulb temperature	±0.2 °F (±0.1 °C)	±0.1 °F (±0.06 °C).
Air wet bulb temperature	±0.2 °F (±0.1 °C)	±0.1 °F (±0.06 °C).
Inlet and outlet water temperatures	±0.2 °F (±0.1 °C)	±0.1 °F (±0.06 °C).
Storage tank temperatures	±0.5 °F (±0.3 °C)	±0.25 °F (±0.14 °C).

3.2.3 *Scale Division.* In no case shall the smallest scale division of the instrument or instrument system exceed 2 times the specified precision.

3.2.4 *Temperature Difference.* Temperature difference between the entering and leaving water may be measured with any of the following:

(a) A thermopile
(b) Calibrated resistance thermometers
(c) Precision thermometers
(d) Calibrated thermistors
(e) Calibrated thermocouples
(f) Quartz thermometers

3.2.5 *Thermopile Construction.* If a thermopile is used, it shall be made from calibrated thermocouple wire taken from a single spool. Extension wires to the recording device shall also be made from that same spool.

3.2.6 *Time Constant.* The time constant of the instruments used to measure the inlet and outlet water temperatures shall be no greater than 2 seconds.

3.3 *Liquid Flow Rate Measurement.* The accuracy of the liquid flow rate measurement, using the calibration if furnished, shall be equal to or less than ±1% of the measured value in mass units per unit time.

3.4 *Electrical Energy.* The electrical energy used shall be measured with an instrument and associated readout device that is accurate within ±0.5% of the reading.

3.5 *Fossil Fuels.* The quantity of fuel used by the water heater shall be measured with an instrument and associated readout device that is accurate within ±1% of the reading.

3.6 *Mass Measurements.* For mass measurements greater than or equal to 10 pounds (4.5 kg), a scale that is accurate within ±0.5% of the reading shall be used to make the measurement. For mass measurements less than 10 pounds (4.5 kg), the scale shall provide a measurement that is accurate within ±0.1 pound (0.045 kg).

3.7 *Heating Value.* The higher heating value of the natural gas, propane, or fuel oil shall be measured with an instrument and associated readout device that is accurate within ±1% of the reading. The heating values of natural gas and propane must be corrected from those measured to the standard temperature of 60.0 °F (15.6 °C) and standard pressure of 30 inches of mercury column (101.6 kPa) using the method described in Annex B of [*ASHRAE 118.2–TBD*].

3.8 *Time.* The elapsed time measurements shall be measured with an instrument that is accurate within ±0.5 seconds per hour.

3.9 *Volume.* Volume measurements shall be measured with an accuracy of ±2% of the total volume.

3.10 *Relative Humidity.* If a relative humidity (RH) transducer is used to measure the relative humidity of the surrounding air while testing heat pump water heaters, the relative humidity shall be measured with an accuracy of ±1.5% RH.

4. Installation

4.1 *Water Heater Mounting.* A water heater designed to be freestanding shall be placed on a ¾ inch (2 cm) thick plywood platform supported by three 2 x 4 inch (5 cm x 10 cm) runners. If the water heater is not approved for installation on combustible flooring, suitable non-combustible material shall be placed between the water heater and the platform. Water heaters designed to be installed into a kitchen countertop space shall be placed against a simulated wall section. Wall-mounted water heaters shall be supported on a simulated wall in accordance

with the manufacturer-published installation instructions. When a simulated wall is used, the construction shall be 2 x 4 inch (5 cm x 10 cm) studs, faced with ¾ inch (2 cm) plywood. For heat pump water heaters not delivered as a single package, the units shall be connected in accordance with the manufacturer-published installation instructions and the overall system shall be placed on the above-described plywood platform. If installation instructions are not provided by the heat pump manufacturer, uninsulated 8 foot (2.4 m) long connecting hoses having an inside diameter of ⅝ inch (1.6 cm) shall be used to connect the storage tank and the heat pump water heater. With the exception of using the storage tank described in 4.10, the same requirements shall apply for water heaters requiring a storage tank. The testing of the water heater shall occur in an area that is protected from drafts of more than 50 ft/min (0.25 m/s) from room ventilation registers, windows, or other external sources of air movement.

4.2 *Water Supply.* Connect the water heater to a water supply capable of delivering water at conditions as specified in sections 2.3 and 2.6 of this appendix.

4.3 *Water Inlet and Outlet Configuration.* For freestanding water heaters that are taller than 36 inches (91.4 cm), inlet and outlet piping connections shall be configured in a manner consistent with Figures 1 and 2 of section 6.4.7 of this appendix. Inlet and outlet piping connections for wall-mounted water heaters shall be consistent with Figure 3 of section 6.4.7 of this appendix. For freestanding water heaters that are 36 inches or less in height and not supplied as part of a counter-top enclosure (commonly referred to as an under-the-counter model), inlet and outlet piping shall be installed in a manner consistent with Figures 4, 5, or 6 of section 6.4.7 of this appendix. For water heaters that are supplied with a counter-top enclosure, inlet and outlet piping shall be made in a manner consistent with Figures 7a and 7b of section 6.4.7 of this appendix, respectively. The vertical piping noted in Figures 7a and 7b shall be located (whether inside the enclosure or along the outside in a recessed channel) in accordance with the manufacturer-published installation instructions.

All dimensions noted in Figures 1 through 7 of section 6.4.7 of this appendix must be achieved. All piping between the water heater and inlet and outlet temperature sensors, noted as T_{IN} and T_{OUT} in the figures, shall be Type ''L'' hard copper having the same diameter as the connections on the water heater. Unions may be used to facilitate installation and removal of the piping arrangements. Install a pressure gauge and diaphragm expansion tank in the supply water piping at a location upstream of the inlet temperature sensor. Install an appropriately rated pressure and temperature relief valve on all water heaters at the port specified by the manufacturer. Discharge piping for the relief valve must be non-metallic. If heat traps, piping insulation, or pressure relief valve insulation are supplied with the water heater, they must be installed for testing. Except when using a simulated wall, provide sufficient clearance such that none of the piping contacts other surfaces in the test room.

At the discretion of the test lab, the mass or water delivered may be measured on either the inlet or outlet of the water heater.

For water heaters designed to be used with a mixing valve and that do not have a self-contained mixing valve, a mixing valve shall be installed according to the water heater and/or mixing valve manufacturer's installation instructions. If permitted by the water heater and mixing valve manufacturer's instructions, the mixing valve and cold water junction may be installed where the elbows are located in the outlet and inlet line, respectively. If there are no installation instructions for the mixing valve in the water heater or mixing valve manufacturer's instructions, then the mixing valve shall be installed on the outlet line and the cold water shall be supplied from the inlet line from a junction installed downstream from the location where the inlet water temperature is measured. The outlet water temperature, water flow rate, and/or mass measuring instrumentation, if installed on the outlet side of the water heater, shall be installed downstream from the mixing valve.

4.4 *Fuel and/or Electrical Power and Energy Consumption.* Install one or more instruments that measure, as appropriate, the quantity and rate of electrical energy and/or fossil fuel consumption in accordance with section 3 of this appendix.

4.5 *Internal Storage Tank Temperature Measurements.* For water heaters with rated storage volumes greater than or equal to 20 gallons, install six temperature measurement sensors inside the water heater tank with a vertical distance of at least 4 inches (100 mm) between successive sensors. For water heaters with rated storage volumes between 2 and 20 gallons, install three temperature measurement sensors inside the water heater tank. Position a temperature sensor at the vertical midpoint of each of the six equal volume nodes within a tank larger than 20 gallons or the three equal volume nodes within a tank between 2 and 20 gallons. Nodes designate the equal volumes used to evenly partition the total volume of the tank. As much as is possible, the temperature sensor should be positioned away from any heating elements, anodic protective devices, tank walls, and flue pipe walls. If the tank cannot accommodate six temperature sensors and meet the installation requirements specified in this section, install the maximum number of sensors that comply with the installation requirements. Install the temperature sensors through:

(a) The anodic device opening;

(b) The relief valve opening; or

(c) The hot water outlet.

If installed through the relief valve opening or the hot water outlet, a tee fitting or outlet piping, as applicable, must be installed as close as possible to its original location. If the relief valve temperature sensor is relocated, and it no longer extends into the top of the tank, install a substitute relief valve that has a sensing element that can reach into the tank. If the hot water outlet includes a heat trap, install the heat trap on top of the tee fitting. Cover any added fittings with thermal insulation having an R value between 4 and 8 $h \cdot ft^2 \cdot °F/Btu$ (0.7 and 1.4 $m^2 \cdot °C/W$). If temperature measurement sensors cannot be installed within the water heater, follow the alternate procedures in section 5.4.2 of this appendix.

4.6 *Ambient Air Temperature Measurement.* Install an ambient air temperature sensor at the vertical midpoint of the water heater and approximately 2 feet (610 mm) from the surface of the water heater. Shield the sensor against radiation.

4.7 *Inlet and Outlet Water Temperature Measurements.* Install temperature sensors in the cold-water inlet pipe and hot-water outlet pipe as shown in Figures 1, 2, 3, 4, 5, 6, 7a, and 7b of section 6.4.7 of this appendix, as applicable.

4.8 *Flow Control.* Install a valve or valves to provide flow as specified in sections 5.3 and 5.4 of this appendix.

4.9 *Flue Requirements.*

4.9.1 *Gas-Fired Water Heaters.* Establish a natural draft in the following manner. For gas-fired water heaters with a vertically discharging draft hood outlet, connect to the draft hood outlet a 5-foot (1.5-meter) vertical vent pipe extension with a diameter equal to the largest flue collar size of the draft hood. For gas-fired water heaters with a horizontally discharging draft hood outlet, connect to the draft hood outlet a 90-degree elbow with a diameter equal to the largest flue collar size of the draft hood, connect a 5-foot (1.5-meter) length of vent pipe to that elbow, and orient the vent pipe to discharge vertically upward. Install direct-vent gas-fired water heaters with venting equipment specified by the manufacturer in the I&O manual using the minimum vertical and horizontal lengths of vent pipe recommended by the manufacturer.

4.9.2 *Oil-Fired Water Heaters.* Establish a draft at the flue collar at the value specified by the manufacturer in the I&O manual. Establish the draft by using a sufficient length of vent pipe connected to the water heater flue outlet, and directed vertically upward. For an oil-fired water heater with a horizontally discharging draft hood outlet, connect to the draft hood outlet a 90-degree elbow with a diameter equal to the largest flue collar size of the draft hood, connect to the elbow fitting a length of vent pipe sufficient to establish the draft, and orient the vent pipe to discharge vertically upward. Direct-vent oil-fired water heaters should be installed with venting equipment as specified by the manufacturer in the I&O manual, using the minimum vertical and horizontal lengths of vent pipe recommended by the manufacturer.

4.10 *Additional Storage Tank.* When testing a water heater requiring a storage tank, the tank to be used for testing shall be an unfired hot water storage tank having a measured volume of 80.0 gallons ±1.0 gallon (178 liters ±3.8 liters) which meets the energy conservation standards for an unfired hot water storage tank at 10 CFR 431.110(a).

4.11 *External Communication.* If the water heater can connect to an external network or controller, this communication shall be disabled for the duration of testing.

5. Test Procedures

5.1 *Operational Mode Selection.* For water heaters that allow for multiple user-selected operational modes, all procedures specified in this appendix shall be carried out with the water heater in the same operational mode (*i.e.,* only one mode). This operational mode shall be the default mode (or similarly named, suggested mode for normal operation) as defined by the manufacturer in the I&O manual for giving selection guidance to the consumer. For heat pump water heaters, if a default mode is not defined in the product literature, each test shall be conducted under an operational mode in which both the heat pump and any electric resistance backup heating element(s) are activated by the unit's control scheme, and which can achieve the internal storage tank temperature specified in this test procedure; if multiple operational modes meet these criteria, the water heater shall be tested under the most energy-intensive mode. If no default mode is specified and the unit does not offer an operational mode that utilizes both the heat pump and the electric resistance backup heating element(s), the first-hour rating test and the 24-hour simulated-use test shall be tested in heat-pump-only mode. For other types of water heaters where a default mode is not specified, test the unit in all modes and rate the unit using the results of the most energy-intensive mode.

5.2 *Water Heater Preparation.*

5.2.1 *Determination of Storage Tank Volume.* For water heaters with a rated storage volume greater than or equal to 2 gallons, determine the storage capacity, V_{st}, of the water heater under test, in gallons (liters), by subtracting the tare weight, W_t, (measured while the tank is empty) from the gross weight of the storage tank when completely filled with water at the supply water temperature specified in section 2.3 of this appendix, W_f, (with all air eliminated and line pressure applied as described in section 2.6 of this appendix) and dividing the resulting net weight by the density of water at the measured temperature.

5.2.2 *Setting the Outlet Discharge Temperature.*

5.2.2.1 *Flow-Activated Water Heaters, including certain instantaneous water heaters and certain storage-type water heaters.* Initiate normal operation of the water heater at the design power rating. Monitor the discharge water temperature and set to the value specified in section 2.5 of this appendix in accordance with the manufacturer's I&O manual. If the water heater is not capable of providing this discharge temperature when the flow rate is 1.7 gallons ±0.25 gallons per minute (6.4 liters ±0.95 liters per minute), then adjust the flow rate as necessary to achieve the specified discharge water temperature. Once the proper temperature control setting is achieved, the setting must remain fixed for the duration of the maximum GPM test and the 24-hour simulated-use test.

5.2.2.2 *Non-Flow Activated Water Heaters, including certain instantaneous water heaters and certain storage-type water heaters.*

5.2.2.2.1 *Tanks with a Single Temperature Controller.*

5.2.2.2.1.1 *Water Heaters with Rated Volumes Less than 20 Gallons.* Starting with a tank at the supply water temperature as specified in section 2.3 of this appendix, initiate normal operation of the water heater. After cut-out, initiate a draw from the water heater at a flow rate of 1.0 gallon ±0.25 gallons per minute (3.8 liters ±0.95 liters per minute) for 2 minutes. Starting 15 seconds after commencement of the draw, record the outlet temperature at 15-second intervals until the end of the 2-minute period. Determine whether the maximum outlet temperature is within the range specified in section 2.4 of this appendix. If not, turn off the water heater, adjust the temperature controller, and then drain and refill the tank with supply water at the temperature specified in section 2.3 of this appendix. Then, once again, initiate normal operation of the water heater, and repeat the 2-minute outlet temperature test following cut-out. Repeat this sequence until the maximum outlet temperature during the 2-minute test is within the range specified in section 2.4 of this appendix. Once the proper temperature control setting is achieved, the setting must remain fixed for the duration of the first-hour rating test and the 24-hour simulated-use test such that a second identical 24-hour simulated-use test run immediately following the one specified in section 5.4 of this appendix would result in average delivered water temperatures that are within the bounds specified in section 2.4 of this appendix.

5.2.2.2.1.2 *Water Heaters with Rated Volumes Greater than or Equal to 20 Gallons.* Starting with a tank at the supply water temperature specified in section 2.3 of this appendix, initiate normal operation of the water heater. After cut-out, initiate a draw from the water heater at a flow rate of 1.7 gallons ±0.25 gallons per minute (6.4 liters ±0.95 liters per minute) for 5 minutes. Starting 15 seconds after commencement of the draw, record the outlet temperature at 15-second intervals until the end of the 5-minute period. Determine whether the maximum outlet temperature is within the range specified in section 2.4 of this appendix. If not, turn off the water heater, adjust the temperature controller, and then drain and refill the tank with supply water at the temperature specified in section 2.3 of this appendix. Then, once again, initiate normal operation of the water heater, and repeat the 5-minute outlet temperature test following cut-out. Repeat this sequence until the maximum outlet temperature during the 5-minute test is within the range specified in section 2.4 of this appendix. Once the proper temperature control setting is achieved, the setting must remain fixed for the duration of the first-hour rating test and the 24-hour simulated-use test such that a second identical 24-hour simulated-use test run immediately following the one specified in section 5.4 of this appendix would result in average delivered water temperatures that are within the bounds specified in section 2.4 of this appendix.

5.2.2.2.2 *Tanks with Two or More Temperature Controllers.* Verify the temperature controller set-point while removing water in accordance with the procedure set forth for the first-hour rating test in section 5.3.3 of this appendix. The following criteria must be met to ensure that all temperature controllers are set to deliver water in the range specified in section 2.4 of this appendix:

(a) At least 50 percent of the water drawn during the first draw of the first-hour rating test procedure shall be delivered at a temperature within the range specified in section 2.4 of this appendix.

(b) No water is delivered above the range specified in section 2.4 of this appendix during first-hour rating test.

(c) The delivery temperature measured 15 seconds after commencement of each draw begun prior to an elapsed time of 60 minutes from the start of the test shall be within the range specified in section 2.4 of this appendix.

(i) If these conditions are not met, turn off the water heater, adjust the temperature controllers, and then drain and refill the tank with supply water at the temperature specified in section 2.3 of this appendix. Repeat the procedure described at the start of section 5.2.2.2.2 of this appendix until the criteria for setting the temperature controllers is met.

(ii) If the conditions stated above are met, the data obtained during the process of verifying the temperature control set-points may be used in determining the first-hour rating provided that all other conditions and methods required in sections 2 and 5.2.4 of this appendix in preparing the water heater were followed.

5.2.3 *Power Input Determination.* For all water heaters except electric types, initiate normal operation (as described in section 5.1 of this appendix) and determine the power input, P, to the main burners (including pilot light power, if any) after 15 minutes of operation. Adjust all burners to achieve an hourly Btu (kJ) rating that is within ±2% of the maximum input rate value specified by the manufacturer. For an oil-fired water heater, adjust the burner to give a CO_2 reading recommended by the manufacturer and an hourly Btu (kJ) rating that is within ±2% of the maximum input rate specified by the manufacturer. Smoke in the flue may not exceed No. 1 smoke as measured by the procedure in ASTM D2156 (RA 2018), including the conditions as specified in ASTM E97–1987 (W1991) as referenced in ASTM D2156 (RA 2018) . If the input rating is not within ±2%, first increase or decrease the fuel pressure within the tolerances specified in section 2.7.2, 2.7.3 or 2.7.4 (as applicable) of this appendix until it is ±2% of the maximum input rate value specified by the manufacturer. If, after adjusting the fuel pressure, the fuel input rate cannot be achieved within ±2 percent of the maximum input rate value specified by the manufacturer, for gas-fired models increase or decrease the gas supply pressure within the range specified by the manufacturer. Finally, if the measured fuel input rate is still not within ±2 percent of the maximum input rate value specified by the manufacturer, modify the gas inlet orifice, if so equipped, as necessary to achieve a fuel input rate that is within ±2 percent of the maximum input rate value specified by the manufacturer.

5.2.4 *Soak-In Period for Water Heaters with Rated Storage Volumes Greater than or Equal to 2 Gallons.* For water heaters with a rated storage volume greater than or equal to 2 gallons (7.6 liters), the water heater must sit filled with water, connected to a power source, and without any draws taking place for at least 12 hours after initially being energized so as to achieve the nominal temperature set-point within the tank and with the unit connected to a power source.

5.3 *Delivery Capacity Tests.*

5.3.1 *General.* For flow-activated water heaters, conduct the maximum GPM test, as described in section 5.3.2, Maximum GPM Rating Test for Flow-Activated Water Heaters, of this appendix. For all other water heaters, conduct the first-hour rating test as described in section 5.3.3 of this appendix.

5.3.2 *Maximum GPM Rating Test for Flow-Activated Water Heaters.* Establish normal water heater operation at the design power rating with the discharge water temperature set in accordance with section 5.2.2.1 of this appendix.

For this 10-minute test, either collect the withdrawn water for later measurement of the total mass removed or use a water meter to directly measure the water mass of volume removed. Initiate water flow through the water heater and record the inlet and outlet water temperatures beginning 15 seconds after the start of the test and at subsequent 5-second intervals throughout the duration of the test. At the end of 10 minutes, turn off the water. Determine and record the mass of water collected, M_{10m}, in pounds (kilograms), or the volume of water, V_{10m}, in gallons (liters).

5.3.3 *First-Hour Rating Test.*

5.3.3.1 *General.* During hot water draws for non-flow activated water heaters with rated storage volumes greater than or equal to 20 gallons, remove water at a rate of 3.0 ±0.25 gallons per minute (11.4 ±0.95 liters per minute). During hot water draws for non-flow activated water heaters with rated storage volumes below 20 gallons, remove water at a rate of 1.5 ±0.25 gallon per minute (5.7 ±0.95 liters per minute). Collect the water in a container that is large enough to hold the volume removed during an individual draw and is suitable for weighing at the termination of each draw to determine the total volume of water withdrawn. As an alternative to collecting the water, a water meter may be used to directly measure the water mass or volume withdrawn during each draw.

5.3.3.2 *Draw Initiation Criteria.* Begin the first-hour rating test by starting a draw on the non-flow activated water heater. After completion of this first draw, initiate successive draws based on the following criteria. For gas-fired and oil-fired water heaters, initiate successive draws when the temperature controller acts to reduce the supply of fuel to the main burner. For electric water heaters having a single element or multiple elements that all operate simultaneously, initiate successive draws when the temperature controller acts to reduce the electrical input supplied to the element(s). For electric water heaters having two or more elements that do not operate simultaneously, initiate successive draws when the applicable temperature controller acts to reduce the electrical input to the energized element located vertically highest in the storage tank. For heat pump water heaters that do not use supplemental, resistive heating, initiate successive draws immediately after the electrical input to the compressor is reduced by the action of the water heater's temperature controller. For heat pump water heaters that use supplemental resistive heating, initiate successive draws immediately after the electrical input to the first of either the compressor or the vertically highest resistive element is reduced by the action of the applicable water heater temperature controller. This draw initiation criterion for heat pump water heaters that use supplemental resistive heating, however, shall only apply when the water located above the thermostat at cut-out is heated to within the range specified in section 2.4 of this appendix. If this criterion is not met, then the next draw should be initiated once the heat pump compressor cuts out.

5.3.3.3 *Test Sequence.* Establish normal water heater operation. If the water heater is not presently operating, initiate a draw. The draw may be terminated any time after cut-in occurs. After cut-out occurs (*i.e.,* all temperature controllers are satisfied), if the water heater can have its internal tank temperatures measured, record the internal storage tank temperature at each sensor described in section 4.5 of this appendix every one minute, and determine the mean tank temperature by averaging the values from these sensors.

(a) Initiate a draw after a maximum mean tank temperature (the maximum of the mean temperatures of the individual sensors) has been observed following a cut-out. If the water heater cannot have its internal tank temperatures measured, wait 5 minutes after cut-out. Record the time when the draw is initiated and designate it as an elapsed time of zero ($\tau^* = 0$). (The superscript * is used to denote variables pertaining to the first-hour rating test). Record the outlet water temperature beginning 15 seconds after the draw is initiated and at 5-second intervals thereafter until the draw is terminated. Determine the maximum outlet temperature that occurs during this first draw and record it as $T^*_{max,1}$. For the duration of this first draw and all successive draws, in addition, monitor the inlet temperature to the water heater to ensure that the required supply water temperature test condition specified in section 2.3 of this appendix is met. Terminate the hot water draw when the outlet temperature decreases to $T^*_{max,1} - 15$ °F ($T^*_{max,1} - 8.3$ °C). (Note, if the outlet temperature does not decrease to $T^*_{max,1} - 15$ °F ($T^*_{max,1} - 8.3$ °C) during the draw, then hot water would be drawn continuously for the duration of the test. In this instance, the test would end when the temperature decreases to $T^*_{max,1} - 15$ °F ($T^*_{max,1} - 8.3$ °C) after the electrical power and/or fuel supplied to the water heater is shut off, as described in the following paragraphs.) Record this temperature as $T^*_{min,1}$. Following draw termination, determine the average outlet water temperature and the mass or volume removed during this first draw and record them as $\overline{T}^*_{del,i}$ and M^*_1 or V^*_1, respectively.

(b) Initiate a second and, if applicable, successive draw(s) each time the applicable draw initiation criteria described in section 5.3.3.2 of this appendix are satisfied. As required for the first draw, record the outlet water temperature 15 seconds after initiating each draw and at 5-second intervals thereafter until the draw is terminated. Determine the maximum outlet temperature that occurs during each draw and record it as $T^*_{max,i}$, where the subscript i refers to the draw number. Terminate each hot water draw when the outlet temperature decreases to $T^*_{max,i} - 15$ °F ($T^*_{max,i} - 8.3$ °C). Record this temperature as $T^*_{min,i}$. Calculate and record the average outlet temperature and the mass or volume removed during each draw ($\overline{T}^*_{del,i}$ and M^*_i or V^*_i, respectively). Continue this sequence of draw and recovery until one hour after the start of the test, then shut off the electrical power and/or fuel supplied to the water heater.

(c) If a draw is occurring at one hour from the start of the test, continue this draw until the outlet temperature decreases to $T^*_{max,n} - 15$ °F ($T^*_{max,n} - 8.3$ °C), at which time the draw shall be immediately terminated. (The subscript n shall be used to denote measurements associated with the final draw.) If a draw is not occurring one hour after the start of the test, initiate a final draw at one hour, regardless of whether the criteria described in section 5.3.3.2 of this appendix are satisfied. This draw shall proceed for a minimum of 30 seconds and shall terminate when the outlet temperature first indicates a value less than or equal to the cut-off temperature used for the previous draw ($T^{*min,n-1}$). If an outlet temperature greater than $T^{*min,n-1}$ is not measured within 30 seconds of initiation of the draw, zero additional credit shall be given towards first-hour rating (*i.e.,* $M^*_n = 0$ or $V^*_n = 0$) based on the final draw. After the final draw is terminated, calculate and record the average outlet temperature and the mass or volume removed during the final draw ($\overline{T}^*_{del,n}$ and M^*_n or V^*_n, respectively).

5.4 *24-Hour Simulated-Use Test.*

5.4.1 *Selection of Draw Pattern.* The water heater will be tested under a draw profile that depends upon the first-hour rating obtained following the test prescribed in section 5.3.3 of this appendix, or the maximum GPM rating obtained following the test prescribed in section 5.3.2 of this appendix, whichever is applicable. For water heaters that have been tested according to the first-hour rating procedure, one of four different patterns shall be applied based on the measured first-hour rating, as shown in Table I of this section. For water heater that have been tested according to the maximum GPM rating procedure, one of four different patterns shall be applied based on the maximum GPM, as shown in Table II of this section.

TABLE I—DRAW PATTERN TO BE USED BASED ON FIRST-HOUR RATING

First-hour rating greater than or equal to:	. . . and first-hour rating less than:	Draw pattern to be used in the 24-hour simulated-use test
0 gallons	18 gallons	Very-Small-Usage (Table III.1).
18 gallons	51 gallons	Low-Usage (Table III.2).
51 gallons	75 gallons	Medium-Usage (Table III.3).
75 gallons	No upper limit	High-Usage (Table III.4).

TABLE II—DRAW PATTERN TO BE USED BASED ON MAXIMUM GPM RATING

Maximum GPM rating greater than or equal to:	and maximum GPM rating less than:	Draw pattern to be used in the 24-hour simulated-use test
0 gallons/minute	1.7 gallons/minute	Very-Small-Usage (Table III.1).
1.7 gallons/minute	2.8 gallons/minute	Low-Usage (Table III.2).
2.8 gallons/minute	4 gallons/minute	Medium-Usage (Table III.3).
4 gallons/minute	No upper limit	High-Usage (Table III.4).

The draw patterns are provided in Tables III.1 through III.4 in section 5.5 of this appendix. Use the appropriate draw pattern when conducting the test sequence provided in section 5.4.2 of this appendix for water heaters with rated storage volumes greater than or equal to 2 gallons or section 5.4.3 of this appendix for water heaters with rated storage volumes less than 2 gallons.

5.4.2 *Test Sequence for Water Heaters with Rated Storage Volumes Greater Than or Equal to 2 Gallons.*

If the water heater is turned off, fill the water heater with supply water at the temperature specified in section 2.3 of this appendix and maintain supply water pressure as described in section 2.6 of this appendix. Turn on the water heater and associated heat pump unit, if present. If turned on in this fashion, the soak-in period described in section 5.2.4 of this appendix shall be implemented. If the water heater has undergone a first-hour rating test prior to conduct of the 24-hour simulated-use test, allow the water heater to fully recover after completion of that test such that the main burner, heating elements, or heat pump compressor of the water heater are no longer raising the temperature of the stored water. In all cases, the water heater shall sit idle for 1 hour prior to the start of the 24-hour test; during which time no water is drawn from the unit and there is no energy input to the main heating elements, heat pump compressor, and/or burners. At the end of this period, the 24-hour simulated-use test will begin.

For water heaters that can have their internal storage tank temperature measured, one minute prior to the start of the 24-hour test simulated-use test, record the mean tank temperature ($\overline{T}_0$). For water heaters that cannot have their internal tank temperatures measured, the mean tank temperature at the start of the 24-hour simulated-use test ($\overline{T}_0$) is the average of the supply and outlet water temperatures measured 5 seconds after the start of the first draw of the test.

At the start of the 24-hour simulated-use test, record the electrical and/or fuel measurement readings, as appropriate. Begin the 24-hour simulated-use test by withdrawing the volume specified in the appropriate table in section 5.5 of this appendix (*i.e.,* Table III.1, Table III.2, Table III.3, or Table III.4, depending on the first-hour rating or maximum GPM rating) for the first draw at the flow rate specified in the applicable table. Record the time when this first draw is initiated and assign it as the test elapsed time (τ) of zero (0). Record the average storage tank and ambient temperature every minute throughout the 24-hour simulated-use test. At the elapsed times specified in the applicable draw pattern table in section 5.5 of this appendix for a particular draw pattern, initiate additional draws pursuant to the draw pattern, removing the volume of hot water at the prescribed flow rate specified by the table. The maximum allowable deviation from the specified volume of water removed for any single draw taken at a nominal flow rate of 1 GPM or 1.7 GPM is ±0.1 gallons (±0.4 liters). The maximum allowable deviation from the specified volume of water removed for any single draw taken at a nominal flow rate of 3 GPM is ±0.25 gallons (0.9 liters). The quantity of water withdrawn during the last draw shall be increased or decreased as necessary such that the total volume of water withdrawn equals the prescribed daily amount for that draw pattern ±1.0 gallon (±3.8 liters). If this adjustment to the volume drawn during the last draw results in no draw taking place, the test is considered invalid.

All draws during the 24-hour simulated-use test shall be made at the flow rates specified in the applicable draw pattern table in section 5.5 of this appendix, within a tolerance of ±0.25 gallons per minute (±0.9 liters per minute). Measurements of the inlet and outlet temperatures shall be made 15 seconds after the draw is initiated and at every subsequent 3-second interval throughout the duration of each draw. Calculate and record the mean of the hot water discharge temperature and the cold water inlet temperature for each draw $\overline{T}_{del,i}$ and $\overline{T}_{in,i}$). Determine and record the net mass or volume removed (M_i or V_i), as appropriate, after each draw.

The first recovery period is the time from the start of the 24-hour simulated-use test and continues during the temperature rise of the stored water until the first cut-out; if the cut-out occurs during a subsequent draw, the first recovery period includes the time until the draw of water from the tank stops. If, after the first cut-out occurs but during a subsequent draw, a subsequent cut-in occurs prior to the draw completion, the first recovery period includes the time until the subsequent cut-out occurs, prior to another draw. The first recovery period may continue until a cut-out occurs when water is not being removed from the water heater or a cut-out occurs during a draw and the water heater does not cut-in prior to the end of the draw.

At the end of the first recovery period, record the maximum mean tank temperature observed after cut-out ($\overline{T}_{max,1}$). For water heaters that cannot have their internal storage tank temperatures measured, the maximum mean tank temperature after the first recovery period ($\overline{T}_{max,1}$) is the average of the final inlet and outlet water temperature measurements of the first draw. At the end of the first recovery period, record the total energy consumed by the water heater from the beginning of the test (Q_r), including all fossil fuel and/or electrical energy use, from the main heat source and auxiliary equipment including, but not limited to, burner(s), resistive elements(s), compressor, fan, controls, pump, etc., as applicable.

The start of the portion of the test during which the standby loss coefficient is determined depends upon whether the unit has fully recovered from the first draw cluster. For water heaters than can have their internal storage tank temperatures measured, if a recovery is occurring at or within five minutes after the end of the final draw in the first draw cluster, as identified in the applicable draw pattern table in section 5.5 of this appendix, then the standby period starts when a maximum mean tank temperature is observed starting five minutes after the end of the recovery period that follows that draw. If a recovery does not occur at or within five minutes after the end of the final draw in the first draw cluster, as identified in the applicable draw pattern table in section 5.5 of this appendix, then the standby period starts five minutes after the end of that draw. For water heaters that cannot have their internal storage tank temperatures measured, the start of the standby period is at the final measurement of

the last draw of the first draw cluster. Determine and record the total electrical energy and/or fossil fuel consumed from the beginning of the test to the start of the standby period ($Q_{su,0}$).

In preparation for determining the energy consumed during standby, record the reading given on the electrical energy (watt-hour) meter, the gas meter, and/or the scale used to determine oil consumption, as appropriate. Record the mean tank temperature at the start of the standby period ($\overline{T}_{su,0}$). For water heaters that cannot have their internal storage tank temperatures measured, the mean tank temperature at the start of the standby period ($\overline{T}_{su,0}$) is the average of the final measured inlet and outlet water temperature from the last draw of the first draw cluster. At 1-minute intervals, record ambient temperature, the electric and/or fuel instrument readings, and, for water heaters that can have their internal storage tank temperatures measured, the mean tank temperature until the next draw is initiated. The end of the standby period is when the final mean tank temperature is recorded, as described. For water heaters that can have their internal storage tank temperatures measured, just prior to initiation of the next draw, record the mean tank temperature ($\overline{T}_{su,f}$). If the water heater is undergoing recovery when the next draw is initiated, record the mean tank temperature ($\overline{T}_{su,f}$) at the minute prior to the start of the recovery. For water heaters that cannot have their internal storage tank temperatures measured, the mean tank temperature at the end of the standby period ($\overline{T}_{su,f}$) is the average of the inlet and outlet water temperatures measured 5 seconds after the start of the next draw. Determine the total electrical energy and/or fossil fuel energy consumption from the beginning of the test to the end of the standby period ($Q_{su,f}$). Record the time interval between the start of the standby period and the end of the standby period ($\tau_{stby,1}$).

Following the final draw of the prescribed draw pattern and subsequent recovery, allow the water heater to remain in the standby mode until exactly 24 hours have elapsed since the start of the 24-hour simulated-use test (*i.e.,* since $\tau = 0$). During the last hour of the 24-hour simulated-use test (*i.e.,* hour 23 of the 24-hour simulated-use test), power to the main burner, heating element, or compressor shall be disabled. At 24 hours, record the reading given by the gas meter, oil meter, and/or the electrical energy meter as appropriate. Determine the fossil fuel and/or electrical energy consumed during the entire 24-hour simulated-use test and designate the quantity as Q. For water heaters that cannot have their internal storage tank temperatures measured, at hour 24 initiate a draw at the flow rate of the first draw of the draw pattern determined as described in section 5.4.1 of this appendix. The mean tank temperature at hour 24 ($\overline{T}_{24}$) is the average of the inlet and outlet water temperatures measured 5 seconds after the start of the draw.

In the event that the recovery period continues from the end of the last draw of the first draw cluster until the subsequent draw, the standby period will start after the end of the first recovery period after the last draw of the 24-hour simulated-use test, when the temperature reaches the maximum mean tank temperature, though no sooner than five minutes after the end of this recovery period. The standby period shall last eight hours, so testing may extend beyond the 24-hour duration of the 24-hour simulated-use test. Determine and record the total electrical energy and/or fossil fuel consumed from the beginning of the 24-hour simulated-use test to the start of the 8-hour standby period ($Q_{su,0}$). In preparation for determining the energy consumed during standby, record the reading(s) given on the electrical energy (watt-hour) meter, the gas meter, and/or the scale used to determine oil consumption, as appropriate. Record the mean tank temperature at the start of the standby period ($\overline{T}_{su,0}$). Record the mean tank temperature, the ambient temperature, and the electric and/or fuel instrument readings at 1-minute intervals until the end of the 8-hour period. Record the mean tank temperature at the end of the 8-hour standby period ($\overline{T}_{su,f}$). If the water heater is undergoing recovery at the end of the standby period, record the mean tank temperature ($\overline{T}_{su,f}$) at the minute prior to the start of the recovery, which will mark the end of the standby period. Determine the total electrical energy and/or fossil fuel energy consumption from the beginning of the test to the end of the standby period ($Q_{su,f}$). Record the time interval between the start of the standby period and the end of the standby period as $\tau_{stby,1}$. Record the average ambient temperature from the start of the standby period to the end of the standby period ($\overline{T}_{a,stby,1}$). Record the average mean tank temperature from the start of the standby period to the end of the standby period ($\overline{T}_{t,stby,1}$).

If the standby period occurred at the end of the first recovery period after the last draw of the 24-hour simulated-use test, allow the water heater to remain in the standby mode until exactly 24 hours have elapsed since the start of the 24-hour simulated-use test (*i.e.,* since $\tau = 0$) or the end of the standby period, whichever is longer. At 24 hours, record the mean tank temperature ($\overline{T}_{24}$) and the reading given by the gas meter, oil meter, and/or the electrical energy meter as appropriate. If the water heater is undergoing a recovery at 24 hours, record the reading given by the gas meter, oil meter, and/or electrical energy meter, as appropriate, and the mean tank temperature ($\overline{T}_{24}$) at the minute prior to the start of the recovery. Determine the fossil fuel and/or electrical energy consumed during the 24 hours and designate the quantity as Q.

Record the time during which water is not being withdrawn from the water heater during the entire 24-hour period ($\tau_{stby,2}$). When the standby period occurs after the last draw of the 24-hour simulated-use test, the test may extend past hour 24. When this occurs, the measurements taken after hour 24 apply only to the calculations of the standby loss coefficient. All other measurements during the time between hour 23 and hour 24 remain the same.

5.4.3 *Test Sequence for Water Heaters with Rated Storage Volume Less Than 2 Gallons.*

Establish normal operation with the discharge water temperature at 125 °F ±5 °F (51.7 °C ±2.8 °C) and set the flow rate as determined in section 5.2 of this appendix. Prior to commencement of the 24-hour simulated-use test, the unit shall remain in an idle state in which controls are active but no water is drawn through the unit for a period of one hour. With no draw occurring, record the reading given by the gas meter and/or the electrical energy meter as appropriate. Begin the 24-hour simulated-use test by withdrawing the volume specified in Tables III.1 through III.4 of section 5.5 of this appendix for the first draw at the flow rate specified. Record the time when this first draw is initiated and designate it as an elapsed time, τ, of 0. At the elapsed times specified in Tables III.1 through III.4 for a particular draw pattern, initiate additional draws, removing the volume of hot water at the prescribed flow rate specified in Tables III.1 through III.4. The maximum allowable deviation from the specified volume of water removed for any single draw taken at a nominal flow rate less than or equal to 1.7 GPM (6.4 L/min) is ±0.1 gallons (±0.4 liters). The maximum allowable deviation from the specified volume of water removed for any single draw taken at a nominal flow rate of 3 GPM (11.4 L/min) is ±0.25 gallons (0.9 liters). The quantity of water drawn during the final draw shall be increased or decreased as necessary such that the total volume of water withdrawn equals the prescribed daily amount for that draw pattern ±1.0 gallon (±3.8 liters). If this adjustment to the volume drawn in the last draw results in no draw taking place, the test is considered invalid.

All draws during the 24-hour simulated-use test shall be made at the flow rates specified in the applicable draw pattern table in section 5.5 of this appendix, within a tolerance of ±0.25 gallons per minute (±0.9 liters per minute). Measurements of the inlet and outlet water temperatures shall be made 15 seconds after the draw is initiated and at every 3-second interval thereafter throughout the duration of the draw. Calculate the mean of the hot water discharge temperature and the cold water inlet temperature for each draw. Record the mass of the withdrawn water or the water meter reading, as appropriate, after each draw. At the end of the first recovery period following the first draw, determine and record the fossil fuel and/or electrical energy consumed, Q_r. Following the final draw and subsequent recovery, allow the water heater to remain in the standby mode until exactly 24 hours have elapsed since the start of the test (*i.e.,* since $\tau = 0$). At 24 hours, record the reading given by the gas meter, oil meter, and/or the electrical energy meter, as appropriate. Determine the fossil fuel and/or electrical energy consumed during the entire 24-hour simulated-use test and designate the quantity as Q.

5.5 *Draw Patterns.*

The draw patterns to be imposed during 24-hour simulated-use tests are provided in Tables III.1 through III.4. Subject each water heater under test to one of these draw patterns based on its first-hour rating or maximum GPM rating, as discussed in section 5.4.1 of this appendix. Each draw pattern specifies the elapsed time in hours and minutes during the 24-hour test when a draw is to commence, the total volume of

water in gallons (liters) that is to be removed during each draw, and the flow rate at which each draw is to be taken, in gallons (liters) per minute.

TABLE III.1—VERY-SMALL-USAGE DRAW PATTERN

Draw No.	Time during test ** [hh:mm]	Volume [gallons (L)]	Flow rate *** [GPM (L/min)]
1 *	0:00	2.0 (7.6)	1 (3.8)
2 *	1:00	1.0 (3.8)	1 (3.8)
3 *	1:05	0.5 (1.9)	1 (3.8)
4 *	1:10	0.5 (1.9)	1 (3.8)
5 *	1:15	0.5 (1.9)	1 (3.8)
6	8:00	1.0 (3.8)	1 (3.8)
7	8:15	2.0 (7.6)	1 (3.8)
8	9:00	1.5 (5.7)	1 (3.8)
9	9:15	1.0 (3.8)	1 (3.8)
Total Volume Drawn Per Day: 10 gallons (38 L)			

* Denotes draws in first draw cluster.
** If a draw extends to the start of the subsequent draw, then the subsequent draw shall start when the required volume of the previous draw has been delivered.
*** Should the water heater have a maximum GPM rating less than 1 GPM (3.8 L/min), then all draws shall be implemented at a flow rate equal to the rated maximum GPM.

TABLE III.2—LOW-USAGE DRAW PATTERN

Draw No.	Time during test [hh:mm]	Volume [gallons (L)]	Flow rate [GPM (L/min)]
1 *	0:00	15.0 (56.8)	1.7 (6.4)
2 *	0:30	2.0 (7.6)	1 (3.8)
3 *	1:00	1.0 (3.8)	1 (3.8)
4	10:30	6.0 (22.7)	1.7 (6.4)
5	11:30	4.0 (15.1)	1.7 (6.4)
6	12:00	1.0 (3.8)	1 (3.8)
7	12:45	1.0 (3.8)	1 (3.8)
8	12:50	1.0 (3.8)	1 (3.8)
9	16:15	2.0 (7.6)	1 (3.8)
10	16:45	2.0 (7.6)	1.7 (6.4)
11	17:00	3.0 (11.4)	1.7 (6.4)
Total Volume Drawn Per Day: 38 gallons (144 L)			

* Denotes draws in first draw cluster.

TABLE III.3—MEDIUM-USAGE DRAW PATTERN

Draw No.	Time during test [hh:mm]	Volume [gallons (L)]	Flow rate [GPM (L/min)]
1 *	0:00	15.0 (56.8)	1.7 (6.4)
2 *	0:30	2.0 (7.6)	1 (3.8)
3 *	1:40	9.0 (34.1)	1.7 (6.4)
4	10:30	9.0 (34.1)	1.7 (6.4)
5	11:30	5.0 (18.9)	1.7 (6.4)
6	12:00	1.0 (3.8)	1 (3.8)
7	12:45	1.0 (3.8)	1 (3.8)
8	12:50	1.0 (3.8)	1 (3.8)
9	16:00	1.0 (3.8)	1 (3.8)
10	16:15	2.0 (7.6)	1 (3.8)
11	16:45	2.0 (7.6)	1.7 (6.4)
12	17:00	7.0 (26.5)	1.7 (6.4)
Total Volume Drawn Per Day: 55 gallons (208 L)			

* Denotes draws in first draw cluster.

TABLE III.4—HIGH-USAGE DRAW PATTERN

Draw No.	Time during test [hh:mm]	Volume [gallons (L)]	Flow rate [GPM (L/min)]
1 *	0:00	27.0 (102)	3 (11.4)
2 *	0:30	2.0 (7.6)	1 (3.8)
3 *	0:40	1.0 (3.8)	1 (3.8)

TABLE III.4—HIGH-USAGE DRAW PATTERN—Continued

Draw No.	Time during test [hh:mm]	Volume [gallons (L)]	Flow rate [GPM (L/min)]
4 *	1:40	9.0 (34.1)	1.7 (6.4)
5	10:30	15.0 (56.8)	3 (11.4)
6	11:30	5.0 (18.9)	1.7 (6.4)
7	12:00	1.0 (3.8)	1 (3.8)
8	12:45	1.0 (3.8)	1 (3.8)
9	12:50	1.0 (3.8)	1 (3.8)
10	16:00	2.0 (7.6)	1 (3.8)
11	16:15	2.0 (7.6)	1 (3.8)
12	16:30	2.0 (7.6)	1.7 (6.4)
13	16:45	2.0 (7.6)	1.7 (6.4)
14	17:00	14.0 (53.0)	3 (11.4)
Total Volume Drawn Per Day: 84 gallons (318 L)			

* Denotes draws in first draw cluster.

6. Computations

6.1 *First-Hour Rating Computation.* For the case in which the final draw is initiated at or prior to one hour from the start of the test, the first-hour rating, F_{hr}, shall be computed using,

BILLING CODE 6450–01–P

$$F_{hr} = \sum_{i=1}^{n} V^*_{del,i}$$

Where:

n = the number of draws that are completed during the first-hour rating test.

$V^*_{del,i}$ = the volume of water removed during the *i*th draw of the first-hour rating test, gal (L) or, if the mass of water removed is being measured,

$$V^*_{del,i} = \frac{M^*_{del,i}}{\rho_{del,i}}$$

Where:

$M^*_{del,i}$ = the mass of water removed during the *i*th draw of the first-hour rating test, lb (kg).

$\rho_{del,i}$ = the density of water removed, evaluated at the average outlet water temperature measured during the *i*th draw of the first-hour rating test, ($\overline{T}^*_{del,i}$), lb/gal (kg/L).

or, if the volume of the water entering the water heater is being measured,

$$V^*_{del,i} = V^*_{in,i}\frac{\rho_{in,i}}{\rho_{del,i}}$$

Where:

$V^*_{in,i}$ = the volume of water entering the water heater during the *i*th draw of the first-hour rating test, gal (L).

$\rho_{in,i}$ = the density of water entering the water heater, evaluated at the average inlet water temperature measured during the *i*th draw of the first-hour rating test, ($\overline{T}^*_{in,i}$), lb/gal (kg/L).

or, if the mass of water entering the water heater is being measured,

$$V^*_{del,i} = \frac{M^*_{in,i}}{\rho_{del,i}}$$

Where:

$M^*_{in,i}$ = the mass of water entering the water heater during the *i*th draw of the first-hour rating test, lb (kg).

For the case in which a draw is not in progress at one hour from the start of the test and a final draw is imposed at the elapsed time of one hour, the first-hour rating shall be calculated using,

$$F_{hr} = V^*_{del,n}\left(\frac{\overline{T}^*_{del,n} - \overline{T}^*_{min,n-1}}{\overline{T}^*_{del,n-1} - \overline{T}^*_{min,n-1}}\right) + \sum_{i=1}^{n-1} V^*_{del,i}$$

Where:

n and $V^*_{del,i}$ are the same quantities as defined above, and

$V^*_{del,n}$ = the volume of water removed during the *n*th (final) draw of the first-hour rating test, gal (L).

$\overline{T}^*_{del,n-1}$ = the average water outlet temperature measured during the *(n − 1)*th draw of the first-hour rating test, °F (°C).

$\overline{T}^*_{del,n}$ = the average water outlet temperature measured during the *n*th (final) draw of the first-hour rating test, °F (°C).

$T^*_{min,n-1}$ = the minimum water outlet temperature measured during the *(n − 1)*th draw of the first-hour rating test, °F (°C).

6.2 *Maximum GPM (L/min) Rating Computation.* Compute the maximum GPM (L/min) rating, F_{max}, as:

$$F_{max} = \frac{V_{del,10m}(\overline{T}_{del} - \overline{T}_{in})}{10(125°F - 58°F)}$$

or,

$$F_{max} = \frac{V_{del,10m}(\overline{T}_{del} - \overline{T}_{in})}{10(51.7°C - 14.4°C)}$$

Where:

$V_{del,10m}$ = the volume of water removed during the maximum GPM (L/min) rating test, gal (L).

$\overline{T}_{del}$ = the average delivery temperature, °F (°C).

$\overline{T}_{in}$ = the average inlet temperature, °F (°C).

10 = the number of minutes in the maximum GPM (L/min) rating test, min.

or, if the mass of water removed is measured,

$$V_{del,10m} = \frac{M_{del,10m}}{\rho_{del}}$$

Where:

$M_{del,10m}$ = the mass of water removed during the maximum GPM (L/min) rating test, lb (kg).

ρ_{del} = the density of water removed, evaluated at the average delivery water temperature of the maximum GPM (L/min) rating test ($\overline{T}_{del}$), lb/gal (kg/L).

or, if the volume of water entering the water heater is measured,

$$V_{del,10m} = V_{in,10m}\frac{\rho_{in}}{\rho_{del}}$$

Where:

$V_{in,10m}$ = the volume of water entering the water heater during the maximum GPM (L/min) rating test, gal (L).

ρ_{in} = the density of water entering the water heater, evaluated at the average inlet water temperature of the maximum GPM (L/min) rating test ($\overline{T}_{del}$), lb/gal (kg/L).

or, if the mass of water entering the water heater is measured,

$$V_{del,10m} = \frac{M_{in,10m}}{\rho_{del}}$$

Where:

$M_{in,10m}$ = the mass of water entering the water heater during the maximum GPM (L/min) rating test, lb (kg).

6.3 *Computations for Water Heaters with a Rated Storage Volume Greater Than or Equal to 2 Gallons.*

6.3.1 *Storage Tank Capacity.* The storage tank capacity, V_{st}, is computed as follows:

$$V_{st} = \frac{(W_f - W_t)}{\rho}$$

Where:

V_{st} = the storage capacity of the water heater, gal (L).

W_f = the weight of the storage tank when completely filled with water, lb (kg).

W_t = the (tare) weight of the storage tank when completely empty, lb (kg).

ρ = the density of water used to fill the tank measured at the temperature of the water, lb/gal (kg/L).

6.3.2 *Mass of Water Removed.* Determine the mass of water removed during each draw of the 24-hour simulated-use test ($M_{del,i}$) as:

If the mass of water removed is measured, use the measured value, or, if the volume of water removed is being measured,

$M_{del,i} = V_{del,i} * \rho_{del,i}$

Where:

$V_{del,i}$ = volume of water removed during draw *i*th draw of the 24-hour simulated-use test, gal (L).

$\rho_{del,i}$ = density of the water removed, evaluated at the average outlet water temperature measured during the *i*th draw of the 24-hour simulated-use test, ($\overline{T}_{del,i}$), lb/gal (kg/L).

or, if the volume of water entering the water heater is measured,

$M_{del,i} = V_{in,i} * \rho_{in,i}$

Where:

$V_{in,i}$ = volume of water entering the water heater during draw *i*th draw of the 24-hour simulated-use test, gal (L).

$\rho_{in,i}$ = density of the water entering the water heater, evaluated at the average inlet water temperature measured during the *i*th draw of the 24-hour simulated-use test, ($\overline{T}_{in,i}$), lb/gal (kg/L).

or, if the mass of water entering the water heater is measured,

$M_{del,i} = M_{in,i}$

Where:

$M_{in,i}$ = mass of water entering the water heater during draw *i*th draw of the 24-hour simulated-use test, lb (kg).

6.3.3 *Recovery Efficiency.* The recovery efficiency for gas, oil, and heat pump water heaters with a rated storage volume greater than or equal to 2 gallons, η_r, is computed as:

$$\eta_r = \frac{V_{st}\,\rho_1\,C_{p1}\left(\overline{T}_{max,1} - \overline{T}_0\right)}{Q_r} + \sum_{i=1}^{N_r} \frac{M_{del,i}\,C_{pi}\left(\overline{T}_{del,i} - \overline{T}_{in,i}\right)}{Q_r}$$

Where:

V_{st} = as defined in section 6.3.1 of this appendix.

ρ_1 = density of stored hot water evaluated at $(\overline{T}_{max,1} + \overline{T}_0)/2$, lb/gal (kg/L).

C_{p1} = specific heat of the stored hot water, evaluated at $(\overline{T}_{max,1} + \overline{T}_0)/2$, Btu/(lb·°F) (kJ/(kg·°C).

$\overline{T}_{max,1}$ = maximum mean tank temperature recorded after the first recovery period as defined in section 5.4.2 of this appendix, °F (°C).

$\overline{T}_0$ = mean tank temperature recorded at the beginning of the 24-hour simulated-use test as determined in section 5.4.2 of this appendix, °F (°C).

Q_r = the total energy used by the water heater during the first recovery period as defined in section 5.4.2 of this appendix, including auxiliary energy such as pilot lights, pumps, fans, etc., Btu (kJ). (Electrical auxiliary energy shall be converted to thermal energy using the following conversion: 1 kWh = 3,412 Btu).

N_r = number of draws from the start of the 24-hour simulated-use test to the end to the first recovery period as described in section 5.4.2.

$M_{del,i}$ = mass of water removed as calculated in section 6.3.2 of this appendix during draw *i*th draw of the first recovery period as described in section 5.4.2, lb (kg).

C_{pi} = specific heat of the withdrawn water during the *i*th draw of the first recovery period as described in section 5.4.2, evaluated at $(\overline{T}_{del,i} + \overline{T}_{in,i})/2$, Btu/(lb· °F) (kJ/(kg· °C)).

$\overline{T}_{del,i}$ = average water outlet temperature measured during the *i*th draw of the first recovery period as described in section 5.4.2, °F (°C).

$\overline{T}_{in,i}$ = average water inlet temperature measured during the *i*th draw of the first recovery period as described in section 5.4.2, °F (°C).

The recovery efficiency for electric water heaters with immersed heating elements, not including heat pump water heaters with immersed heating elements, is assumed to be 98 percent.

6.3.4 *Hourly Standby Losses.* The energy consumed as part of the standby loss test of the 24-hour simulated-use test, Q_{stby}, is computed as:

$Q_{stby} = Q_{su,f} - Q_{su,0}$

Where:

$Q_{su,0}$ = cumulative energy consumption, including all fossil fuel and electrical energy use, of the water heater from the start of the 24-hour simulated-use test to the start of the standby period as determined in section 5.4.2 of this appendix, Btu (kJ).

$Q_{su,f}$ = cumulative energy consumption, including all fossil fuel and electrical energy use, of the water heater from the start of the 24-hour simulated-use test to the end of the standby period as determined in section 5.4.2 of this appendix, Btu (kJ).

The hourly standby energy losses are computed as:

$$Q_{hr} = \frac{Q_{stby} - \dfrac{V_{st}\,\rho\,C_p\left(\overline{T}_{su,f} - \overline{T}_{su.0}\right)}{\eta_r}}{\tau_{stby,1}}$$

Where:

Q_{hr} = the hourly standby energy losses of the water heater, Btu/h (kJ/h).

V_{st} = as defined in section 6.3.1 of this appendix.

ρ = density of the stored hot water, evaluated at $(\overline{T}_{su,f} + \overline{T}_{su,0})/2$, lb/gal (kg/L).

C_p = specific heat of the stored water, evaluated at $(\overline{T}_{su,f} + \overline{T}_{su,0})/2$, Btu/(lb·F), (kJ/(kg·K)).

$\overline{T}_{su,f}$ = the mean tank temperature measured at the end of the standby period as determined in section 5.4.2 of this appendix, °F (°C).

$\overline{T}_{su,0}$ = the maximum mean tank temperature measured at the beginning of the standby

period as determined in section 5.4.2 of this appendix, °F (°C).

η_r = as defined in section 6.3.3 of this appendix.

$\tau_{stby,1}$ = elapsed time between the start and end of the standby period as determined in section 5.4.2 of this appendix, h.

The standby heat loss coefficient for the tank is computed as:

$$UA = \frac{Q_{hr}}{\overline{T}_{t,stby,1} - \overline{T}_{a,stby,1}}$$

Where:

UA = standby heat loss coefficient of the storage tank, Btu/(h· °F), (kJ/(h· °C).

$\overline{T}_{t,stby,1}$ = overall average mean tank temperature between the start and end of the standby period as determined in section 5.4.2 of this appendix, °F (°C).

$\overline{T}_{a,stby,1}$ = overall average ambient temperature between the start and end of the standby period as determined in section 5.4.2 of this appendix, °F (°C).

6.3.5 *Daily Water Heating Energy Consumption.* The total energy used by the water heater during the 24-hour simulated-use test (Q) is as measured in section 5.4.2 of this appendix, or,

$Q = Q_f + Q_e$ = total energy used by the water heater during the 24-hour simulated-use test, including auxiliary energy such as pilot lights, pumps, fans, etc., Btu (kJ).

Q_f = total fossil fuel energy used by the water heater during the 24-hour simulated-use test, Btu (kJ).

Q_e = total electrical energy used during the 24-hour simulated-use test, Btu (kJ). (Electrical energy shall be converted to thermal energy using the following conversion: 1kWh = 3,412 Btu.)

The daily water heating energy consumption, Q_d, is computed as:

$$Q_d = Q - \frac{V_{st}\ \rho\ C_p\ (\overline{T}_{24} - \overline{T}_0)}{\eta_r}$$

Where:

V_{st} = as defined in section 6.3.1 of this appendix.

ρ = density of the stored hot water, evaluated at $(\overline{T}_{24} + \overline{T}_0)/2$, lb/gal (kg/L).

C_p = specific heat of the stored water, evaluated at $(\overline{T}_{24} + \overline{T}_0)/2$, Btu/(lb·F), (kJ/(kg·K)).

$\overline{T}_{24}$ = mean tank temperature at the end of the 24-hour simulated-use test as determined in section 5.4.2 of this appendix, °F (°C).

$\overline{T}_0$ = mean tank temperature recorded at the beginning of the 24-hour simulated-use test as determined in section 5.4.2 of this appendix, °F (°C).

η_r = as defined in section 6.3.3 of this appendix.

6.3.6 *Adjusted Daily Water Heating Energy Consumption.* The adjusted daily water heating energy consumption, Q_{da}, takes into account that the ambient temperature may differ from the nominal value of 67.5 °F (19.7 °C) due to the allowable variation in surrounding ambient temperature of 65 °F (18.3 °C) to 70 °C (21.1 °C). The adjusted daily water heating energy consumption is computed as:

$Q_{da} = Q_d - (67.5°F - \overline{T}_{a,stby,2})UA\ \tau_{stby,2}$

or,

$Q_{da} = Q_d - (19.7°C - \overline{T}_{a,stby,2})UA\ \tau_{stby,2}$

Where:

Q_{da} = the adjusted daily water heating energy consumption, Btu (kJ).

Q_d = as defined in section 6.3.4 of this appendix.

$\overline{T}_{a,stby,2}$ = the average ambient temperature during the total standby portion, $\tau_{stby,2}$, of the 24-hour simulated-use test, °F (°C).

UA = as defined in section 6.3.4 of this appendix.

$\tau_{stby,2}$ = the number of hours during the 24-hour simulated-use test when water is not being withdrawn from the water heater.

A modification is also needed to take into account that the temperature difference between the outlet water temperature and supply water temperature may not be equivalent to the nominal value of 67 °F (125 °F–58 °F) or 37.3 °C (51.7 °C–14.4 °C). The following equations adjust the experimental data to a nominal 67 °F (37.3 °C) temperature rise.

The energy used to heat water, Btu/day (kJ/day), may be computed as:

$$Q_{HW} = \sum_{i=1}^{N} \frac{M_{del,i}\ C_{pi}\left(\overline{T}_{del,i} - \overline{T}_{in,i}\right)}{\eta_r}$$

Where:

N = total number of draws in the 24-hour simulated-use test.

$M_{del,i}$ = the mass of water removed during the *i*th draw (i = 1 to N) as calculated in section 6.3.2 of this appendix, lb (kg).

C_{pi} = the specific heat of the water withdrawn during the *i*th draw of the 24-hour simulated-use test, evaluated at ($T_{del,i}$ + $T_{in,i}$)/2, Btu/(lb· °F) (kJ/(kg·°C)).

$T_{del,i}$ = the average water outlet temperature measured during the *i*th draw (i = 1 to N), °F (°C).

$T_{in,i}$ = the average water inlet temperature measured during the *i*th draw (i = 1 to N), °F (°C).

η_r = as defined in section 6.3.3 of this appendix.

The energy required to heat the same quantity of water over a 67 °F (37.3 °C) temperature rise, Btu/day (kJ/day), is:

$$Q_{HW,67°F} = \sum_{i=1}^{N} \frac{M_{del,i}\ C_{pi}(125°F - 58°F)}{\eta_r}$$

or,

$$Q_{HW,37.3°C} = \sum_{i=1}^{N} \frac{M_{del,i}\ C_{pi}(51.7°C - 14.4°C)}{\eta_r}$$

The difference between these two values is:

$Q_{HWD} = Q_{HW,67°F} - Q_{HW}$

or,

$Q_{HWD} = Q_{HW,37.3°C} - Q_{HW}$

This difference (Q_{HWD}) must be added to the adjusted daily water heating energy consumption value. Thus, the daily energy consumption value, which takes into account that the ambient temperature may not be 67.5 °F (19.7 °C) and that the temperature rise across the storage tank may not be 67 °F (37.3 °C) is:

$Q_{dm} = Q_{da} + Q_{HWD}$

6.3.7 *Uniform Energy Factor.* The uniform energy factor, UEF, is computed as:

$$UEF = \sum_{i=1}^{N} \frac{M_{del,i}\, C_{pi}\, (125°F - 58°F)}{Q_{dm}}$$

or,

$$UEF = \sum_{i=1}^{N} \frac{M_{del,i}\, C_{pi}\, (51.7°C - 14.4°C)}{Q_{dm}}$$

Where:

N = total number of draws in the 24-hour simulated-use test.

Q_{dm} = the modified daily water heating energy consumption as computed in accordance with section 6.3.6 of this appendix, Btu (kJ).

$M_{del,i}$ = the mass of water removed during the *i*th draw (i = 1 to N) as calculated in section 6.3.2 of this appendix, lb (kg).

C_{pi} = the specific heat of the water withdrawn during the *i*th draw of the 24-hour simulated-use test, evaluated at (125 °F + 58 °F)/2 = 91.5 °F ((51.7 °C + 14.4 °C)/2 = 33 °C), Btu/(lb·°F) (kJ/(kg·°C)).

6.3.8 *Annual Energy Consumption.* The annual energy consumption for water heaters with rated storage volumes greater than or equal to 2 gallons is computed as:

$$E_{annual} = 365 * \frac{(V)(\rho)(C_p)(67)}{UEF}$$

Where:

UEF = the uniform energy factor as computed in accordance with section 6.3.7 of this appendix.

365 = the number of days in a year.

V = the volume of hot water drawn during the applicable draw pattern, gallons
= 10 for the very-small-usage draw pattern.
= 38 for the low-usage draw pattern.
= 55 for the medium-usage draw pattern.
= 84 for high-usage draw pattern.

ρ = 8.24 lb/gallon, the density of water at 125 °F.

C_p = 1.00 Btu/(lb °F), the specific heat of water at 91.5 °F.

67 = the nominal temperature difference between inlet and outlet water.

6.3.9 *Annual Electrical Energy Consumption.* The annual electrical energy consumption in kilowatt-hours for water heaters with rated storage volumes greater than or equal to 2 gallons, $E_{annual,e}$, is computed as:

$$E_{annual,e} = \frac{E_{annual}}{3412} * \left(\frac{Q_e}{Q}\right)$$

Where:

E_{annual} = the annual energy consumption as determined in accordance with section 6.3.8 of this appendix, Btu (kJ).

Q_e = the daily electrical energy consumption as defined in section 6.3.5 of this appendix, Btu (kJ).

Q = total energy used by the water heater during the 24-hour simulated-use test in accordance with section 6.3.5 of this appendix, Btu (kJ).

3412 = conversion factor from Btu to kWh.

6.3.10 *Annual Fossil Fuel Energy Consumption.* The annual fossil fuel energy consumption for water heaters with rated storage volumes greater than or equal to 2 gallons, $E_{annual,f,}$ is computed as:

$E_{annual,f} = E_{annual} - (E_{annual,e} * 3412)$

Where:

E_{annual} = the annual energy consumption as determined in accordance with section 6.3.8 of this appendix, Btu (kJ).

$E_{annual,e}$ = the annual electrical energy consumption as determined in accordance with section 6.3.9 of this appendix, kWh.

3412 = conversion factor from kWh to Btu.

6.4 *Computations for Water Heaters With a Rated Storage Volume Less Than 2 Gallons.*

6.4.1 *Mass of Water Removed*

Calculate the mass of water removed using the calculations in section 6.3.2 of this appendix.

6.4.2 *Recovery Efficiency.* The recovery efficiency, $\eta_{r,}$ is computed as:

$$\eta_r = \frac{M_1\, C_{p1}\, \left(\overline{T}_{del,1} - \overline{T}_{in,1}\right)}{Q_r}$$

Where:

M_1 = mass of water removed during the first draw of the 24-hour simulated-use test, lb (kg).

C_{p1} = specific heat of the withdrawn water during the first draw of the 24-hour simulated-use test, evaluated at ($\overline{T}_{del,i}$ + $\overline{T}_{in,i}$ =)/2, Btu/(lb ·°F) (kJ/(kg ·°C)).

$\overline{T}_{del,i}$ = average water outlet temperature measured during the first draw of the 24-hour simulated-use test, °F (°C).

$\overline{T}_{in,i}$ = average water inlet temperature measured during the first draw of the 24-hour simulated-use test, °F (°C).

Q_r = the total energy used by the water heater during the first recovery period as defined in section 5.4.3 of this appendix, including auxiliary energy such as pilot lights, pumps, fans, etc., Btu (kJ). (Electrical auxiliary energy shall be converted to thermal energy using the following conversion: 1 kWh = 3412 Btu.)

6.4.3 *Daily Water Heating Energy Consumption.* The daily water heating energy consumption, $Q_{d,}$ is computed as:

$Q_d = Q$

Where:

$Q = Q_f + Q_e$ = the energy used by the water heater during the 24-hour simulated-use test.

Q_f = total fossil fuel energy used by the water heater during the 24-hour simulated-use test, Btu (kJ).

Q_e = total electrical energy used during the 24-hour simulated-use test, Btu (kJ). (Electrical auxiliary energy shall be converted to thermal energy using the following conversion: 1 kWh = 3412 Btu.)

A modification is needed to take into account that the temperature difference between the outlet water temperature and supply water temperature may not be equivalent to the nominal value of 67 °F (125 °F–58 °F) or 37.3 °C (51.7 °C–14.4 °C). The following equations adjust the experimental data to a nominal 67 °F (37.3 °C) temperature rise.

The energy used to heat water may be computed as:

$$Q_{HW} = \sum_{i=1}^{N} \frac{M_{del,i}\, C_{pi}\left(\overline{T}_{del,i} - \overline{T}_{in,i}\right)}{\eta_r}$$

Where:

N = total number of draws in the 24-hour simulated-use test.

$M_{del,i}$ = the mass of water removed during the *i*th draw (i = 1 to N) as calculated in section 6.4.1 of this appendix, lb (kg).

C_{pi} = the specific heat of the water withdrawn during the *i*th draw of the 24-hour simulated-use test, evaluated at ($\overline{T}_{del,i}$ + $\overline{T}_{in,i}$)/2, Btu/(lb·°F) (kJ/(kg·°C)).

$\overline{T}_{del,i}$ = the average water outlet temperature measured during the *i*th draw (i = 1 to N), °F (°C).

$\overline{T}_{in,i}$ = the average water inlet temperature measured during the *i*th draw (i = 1 to N), °F (°C).

η_r = as defined in section 6.4.2 of this appendix.

The energy required to heat the same quantity of water over a 67 °F (37.3 °C) temperature rise is:

$$Q_{HW,67°F} = \sum_{i=1}^{N} \frac{M_{del,i}\, C_{pi}(125°F - 58°F)}{\eta_r}$$

or,

$$Q_{HW,37.3°C} = \sum_{i=1}^{N} \frac{M_{del,i}\, C_{pi}(51.7°C - 14.4°C)}{\eta_r}$$

Where:

N = total number of draws in the 24-hour simulated-use test.

$M_{del,i}$ = the mass of water removed during the *i*th draw (i = 1 to N) as calculated in section 6.4.1 of this appendix, lb (kg).

C_{pi} = the specific heat of the water withdrawn during the *i*th draw of the 24-hour simulated-use test, evaluated at ($\overline{T}_{del,i}$ + $\overline{T}_{in,i}$)/2, Btu/(lb·°F) (kJ/(kg·°C)).

η_r = as defined in section 6.4.2 of this appendix.

The difference between these two values is:

$Q_{HWD} = Q_{HW,67°F} - Q_{HW}$

or,

$Q_{HWD} = Q_{HW,37.3°C} - Q_{HW}$

This difference (Q_{HWD}) must be added to the daily water heating energy consumption value. Thus, the daily energy consumption value, which takes into account that the temperature rise across the water heater may not be 67 °F (37.3 °C), is:

$Q_{dm} = Q_{da} + Q_{HWD}$

6.4.4 *Uniform Energy Factor.* The uniform energy factor, UEF, is computed as:

$$UEF = \sum_{i=1}^{N} \frac{M_{del,i}\ C_{pi}\ (125°F - 58°F)}{Q_{dm}}$$

or,

$$UEF = \sum_{i=1}^{N} \frac{M_{del,i}\ C_{pi}\ (51.7°C - 14.4°C)}{Q_{dm}}$$

Where:

N = total number of draws in the 24-hour simulated-use test.

Q_{dm} = the modified daily water heating energy consumption as computed in accordance with section 6.4.3 of this appendix, Btu (kJ).

$M_{del,i}$ = the mass of water removed during the *i*th draw (i = 1 to N) as calculated in section 6.4.1 of this appendix, lb (kg).

C_{pi} = the specific heat of the water withdrawn during the *i*th draw of the 24-hour simulated-use test, evaluated at (125 °F + 58 °F)/2 = 91.5 °F ((51.7 °C + 14.4 °C)/2 = 33.1 °C), Btu/(lb·°F) (kJ/(kg·°C)).

6.4.5 *Annual Energy Consumption.* The annual energy consumption for water heaters with rated storage volumes less than 2 gallons, E_{annual}, is computed as:

$$E_{annual} = 365 * \frac{(V)(\rho)(C_p)(67)}{UEF}$$

Where:

UEF = the uniform energy factor as computed in accordance with section 6.4.4 of this appendix.

365 = the number of days in a year.

V = the volume of hot water drawn during the applicable draw pattern, gallons
= 10 for the very-small-usage draw pattern.
= 38 for the low-usage draw pattern.
= 55 for the medium-usage draw pattern.
= 84 for high-usage draw pattern.

ρ = 8.24 lb/gallon, the density of water at 125 °F.

C_p = 1.00 Btu/(lb °F), the specific heat of water at 91.5 °F.

67 = the nominal temperature difference between inlet and outlet water.

6.4.6 *Annual Electrical Energy Consumption.* The annual electrical energy consumption in kilowatt-hours for water heaters with rated storage volumes less than 2 gallons, $E_{annual,e}$, is computed as:

$$E_{annual,e} = \frac{E_{annual}}{3412} * \left(\frac{Q_e}{Q}\right)$$

Where:

Q_e = the daily electrical energy consumption as defined in section 6.4.3 of this appendix, Btu (kJ).

E_{annual} = the annual energy consumption as determined in accordance with section 6.4.5 of this appendix, Btu (kJ).

Q = total energy used by the water heater during the 24-hour simulated-use test in accordance with section 6.4.3 of this appendix, Btu (kJ).

Q_{dm} = the modified daily water heating energy consumption as computed in accordance with section 6.4.3 of this appendix, Btu (kJ).

3412 = conversion factor from Btu to kWh.

6.4.7 *Annual Fossil Fuel Energy Consumption.* The annual fossil fuel energy consumption for water heaters with rated storage volumes less than 2 gallons, $E_{annual,f}$, is computed as:

$$E_{annual,f} = E_{annual} - (E_{annual,e} * 3412)$$

Where:

E_{annual} = the annual energy consumption as defined in section 6.4.5 of this appendix, Btu (kJ).

$E_{annual,e}$ = the annual electrical energy consumption as defined in section 6.4.6 of this appendix, kWh.

3412 = conversion factor from kWh to Btu.

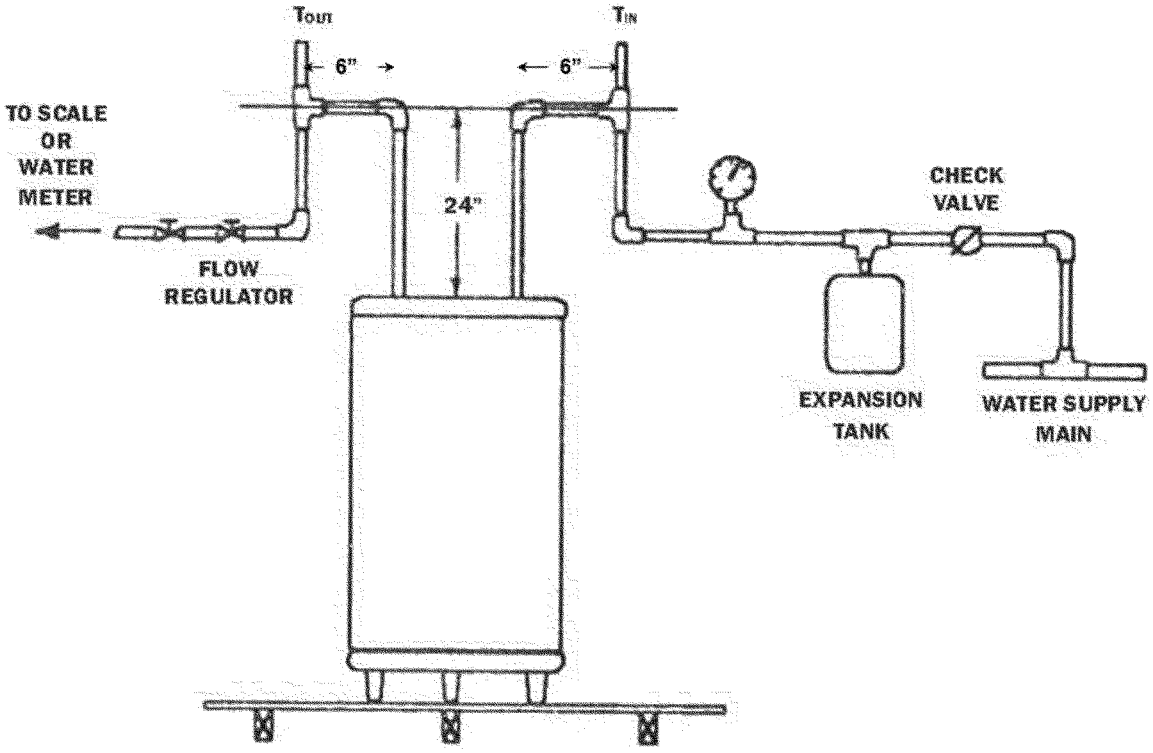
TOUT
TIN
6"
6"
TO SCALE
OR
WATER
METER
24"
CHECK
VALVE
FLOW
REGULATOR
EXPANSION
TANK
WATER SUPPLY
MAIN

Figure 1.

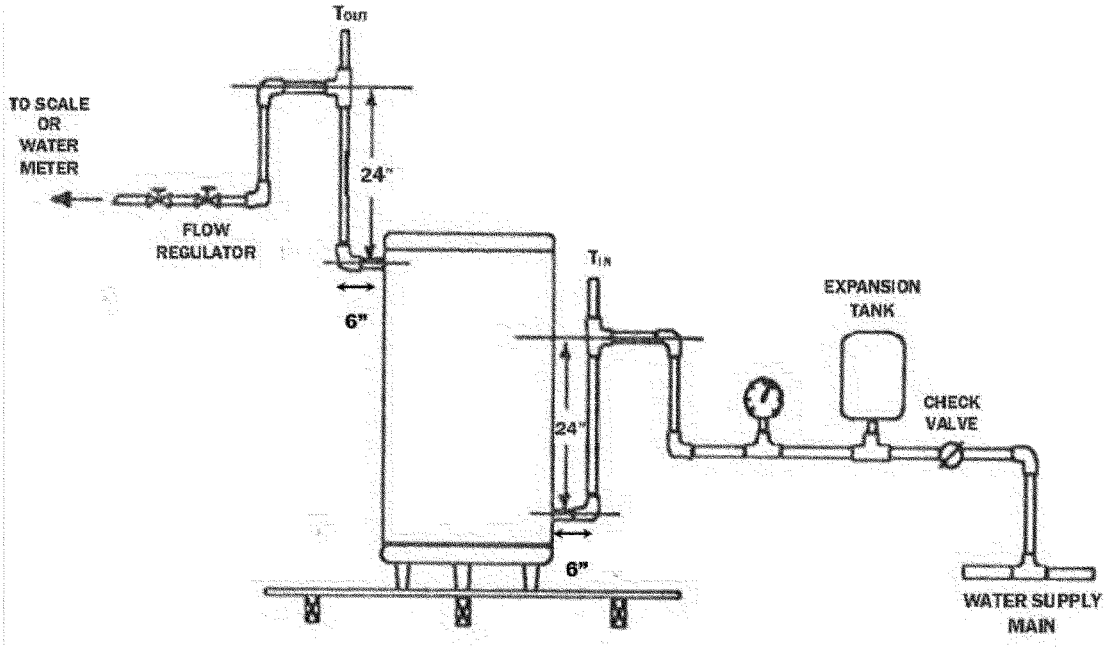

Figure 2.

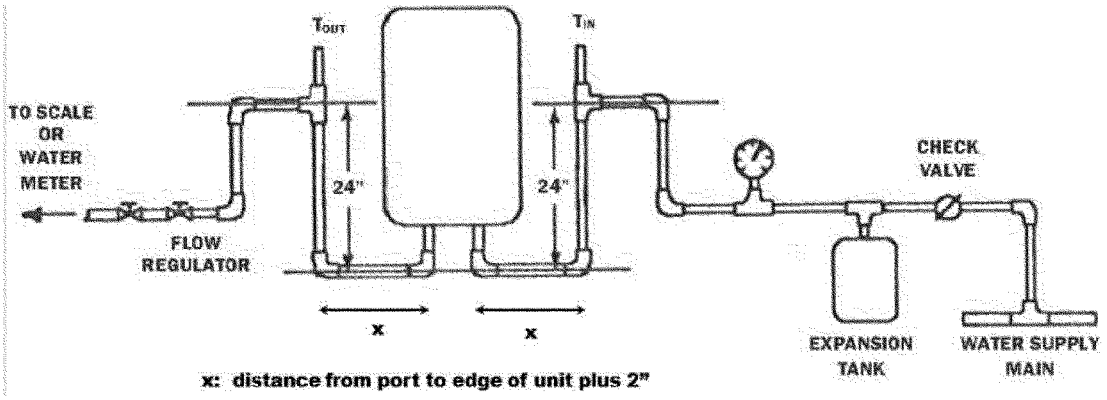

Figure 3.

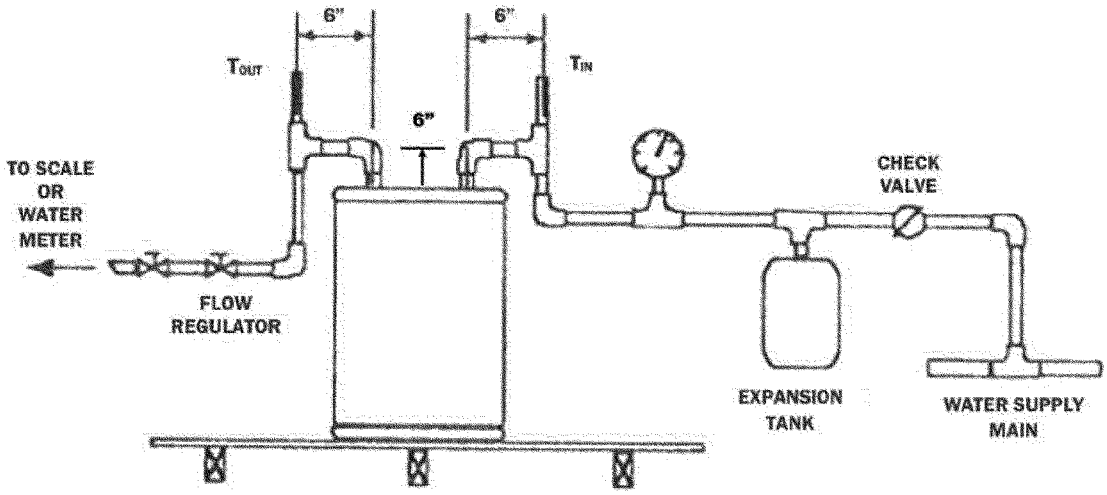

Figure 4.

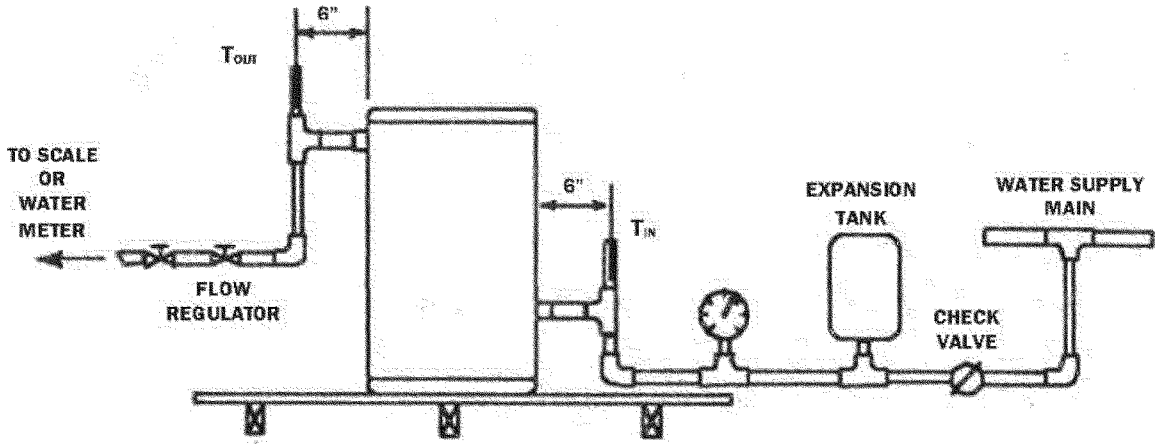

Figure 5.

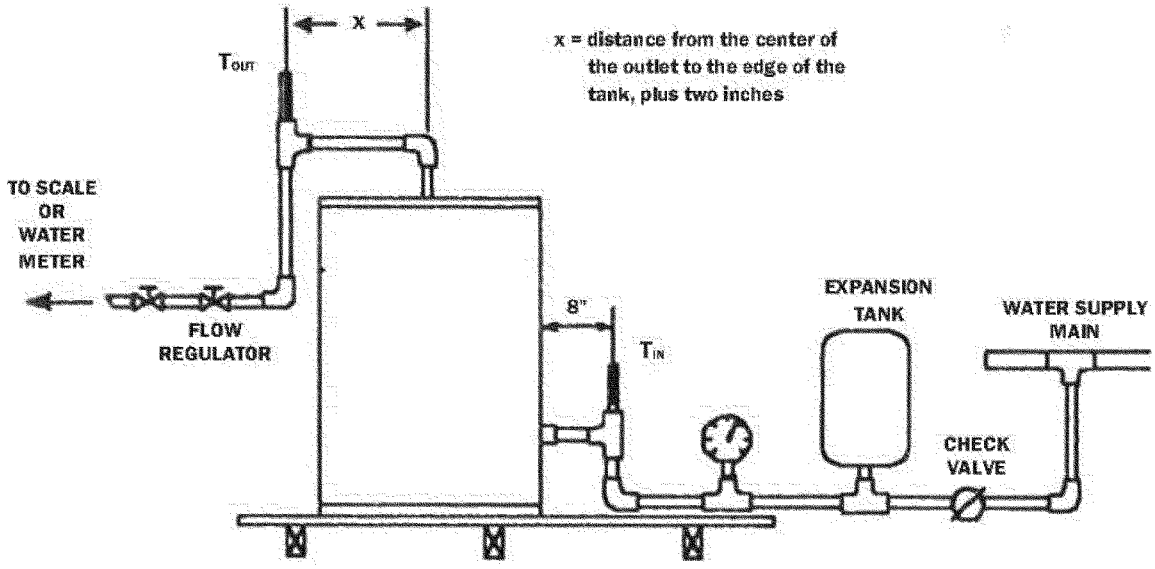

Figure 6.

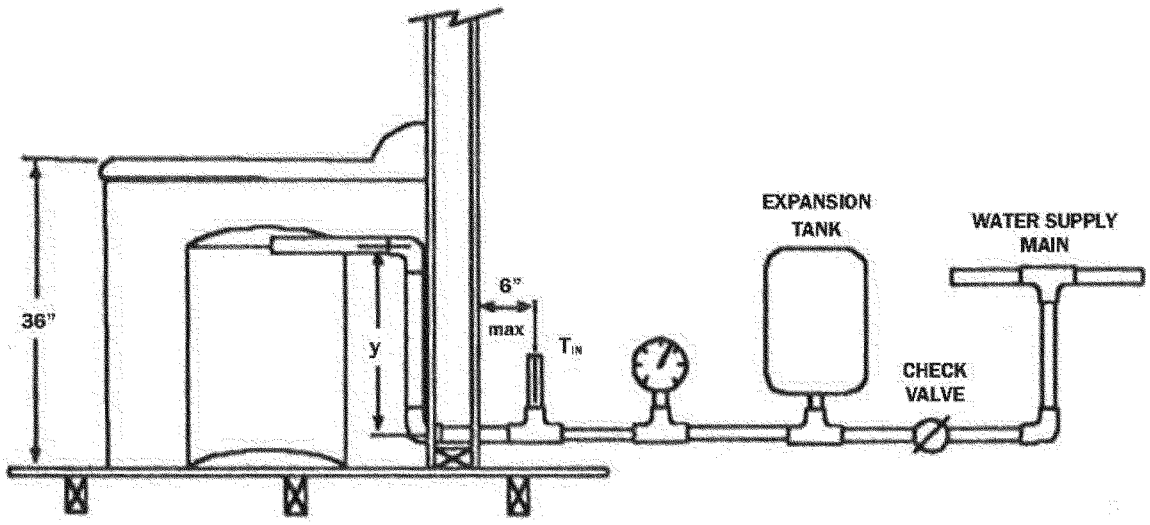

Figure 7a.

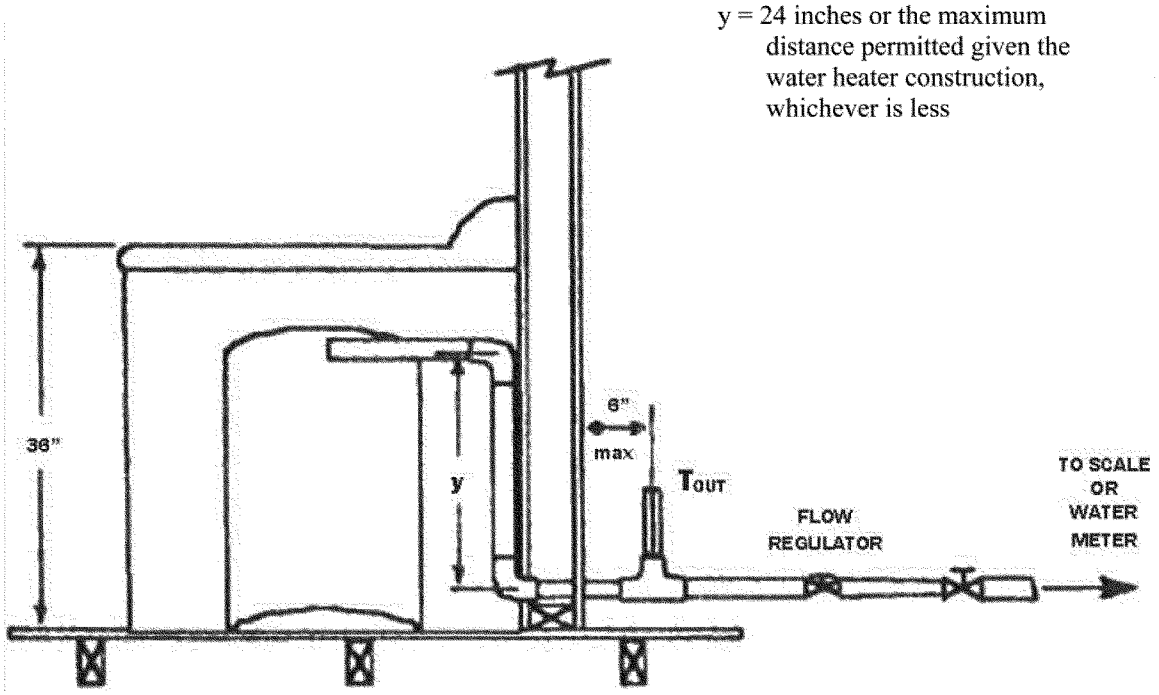

Figure 7b.

PART 431—ENERGY EFFICIENCY PROGRAM FOR CERTAIN COMMERCIAL AND INDUSTRIAL EQUIPMENT

■ 8. The authority citation for part 431 continues to read as follows:

Authority: 42 U.S.C. 6291–6317; 28 U.S.C. 2461 note.

■ 9. Amend § 431.102 by adding in alphabetical order the definition of ''*Commercial heat pump water heater (CHPWH)*'' to read as follows:

§ 431.102 Definitions concerning commercial water heaters, hot water supply boilers, unfired hot water storage tanks, and commercial heat pump water heaters.

* * * * *

Commercial heat pump water heater (CHPWH) means a water heater (including all ancillary equipment such as fans, blowers, pumps, storage tanks, piping, and controls, as applicable) that uses a refrigeration cycle, such as vapor compression, to transfer heat from a low-temperature source to a higher-temperature sink for the purpose of heating potable water, and operates with a current rating greater than 24 amperes or a voltage greater than 250 volts. Such equipment includes, but is not limited to, air-source heat pump water heaters, water-source heat pump water heaters, and direct geo-exchange heat pump water heaters.

* * * * *

[FR Doc. 2021–27004 Filed 1–10–22; 8:45 am]

BILLING CODE 6450–01–P

FEDERAL REGISTER

Vol. 87 Tuesday,

No. 7 January 11, 2022

Part V

Environmental Protection Agency

40 CFR Part 63

National Emission Standards for Hazardous Air Pollutants: Primary Copper Smelting Residual Risk and Technology Review and Primary Copper Smelting Area Source Technology Review; Proposed Rule

ENVIRONMENTAL PROTECTION AGENCY

40 CFR Part 63

[EPA–HQ–OAR–2020–0430; FRL–7522–01–OAR]

RIN 2060–AU63

National Emission Standards for Hazardous Air Pollutants: Primary Copper Smelting Residual Risk and Technology Review and Primary Copper Smelting Area Source Technology Review

AGENCY: Environmental Protection Agency (EPA).

ACTION: Proposed rule.

SUMMARY: This proposal presents the results of the U.S. Environmental Protection Agency's (EPA's) residual risk and technology review (RTR) for the National Emission Standards for Hazardous Air Pollutants (NESHAP) for major source Primary Copper Smelters as required under the Clean Air Act (CAA). Pursuant to the CAA, this action also presents the results of the technology review for the Primary Copper Smelting area source NESHAP. The EPA is proposing new emissions standards in the major source NESHAP. The EPA is also proposing to remove exemptions for periods of startup, shutdown, and malfunction (SSM) and specify that the emission standards apply at all times and require electronic reporting of performance test results and notification of compliance reports.

DATES: *Comments.* Comments must be received on or before February 25, 2022. Under the Paperwork Reduction Act (PRA), comments on the information collection provisions are best assured of consideration if the Office of Management and Budget (OMB) receives a copy of your comments on or before February 10, 2022.

Public hearing. If anyone contacts us requesting a public hearing on or before January 18, 2022, the EPA will hold a virtual public hearing. See **SUPPLEMENTARY INFORMATION** for information on requesting and registering for a public hearing.

ADDRESSES: You may send comments, identified by Docket ID No. EPA–HQ–OAR–2020–0430, by any of the following methods:

- *Federal eRulemaking Portal: https://www.regulations.gov/* (our preferred method). Follow the online instructions for submitting comments.
- *Email: a-and-r-docket@epa.gov.* Include Docket ID No. EPA–HQ–OAR–2020–0430 in the subject line of the message.
- *Fax:* (202) 566–9744. Attention Docket ID No. EPA–HQ–OAR–2020–0430.
- *Mail:* U.S. Environmental Protection Agency, EPA Docket Center, Docket ID No. EPA–HQ–OAR–2020–0430, Mail Code 28221T, 1200 Pennsylvania Avenue NW, Washington, DC 20460.
- *Hand/Courier Delivery:* EPA Docket Center, WJC West Building, Room 3334, 1301 Constitution Avenue NW, Washington, DC 20004. The Docket Center's hours of operation are 8:30 a.m.–4:30 p.m., Monday–Friday (except federal holidays).

Instructions: All submissions received must include the Docket ID No. for this rulemaking. Comments received may be posted without change to *https://www.regulations.gov/,* including any personal information provided. For detailed instructions on sending comments and additional information on the rulemaking process, see the **SUPPLEMENTARY INFORMATION** section of this document. Out of an abundance of caution for members of the public and our staff, the EPA Docket Center and Reading Room are closed to the public, with limited exceptions, to reduce the risk of transmitting COVID–19. Our Docket Center staff will continue to provide remote customer service via email, phone, and webform. The EPA encourages the public to submit comments via *https://www.regulations.gov/* or email, as there may be a delay in processing mail and faxes. Hand deliveries and couriers may be received by scheduled appointment only. For further information on EPA Docket Center services and the current status, please visit us online at *https://www.epa.gov/dockets.*

FOR FURTHER INFORMATION CONTACT: For questions about this proposed action, contact Tonisha Dawson, Sector Policies and Programs Division (D243–02), Office of Air Quality Planning and Standards, U.S. Environmental Protection Agency, Research Triangle Park, North Carolina 27711; telephone number: (919) 541–1454; fax number: (919) 541–4991; and email address: *dawson.tonisha@epa.gov.* For specific information regarding the risk modeling methodology, contact James Hirtz, Health and Environmental Impacts Division (C539–02), Office of Air Quality Planning and Standards, U.S. Environmental Protection Agency, Research Triangle Park, North Carolina 27711; telephone number: (919) 541–0881; fax number: (919) 541–4991; and email address: *hirtz.james@epa.gov.*

SUPPLEMENTARY INFORMATION:

Executive Summary. This proposal presents the results of the EPA's residual risk and technology review (RTR) for the NESHAP for major source Primary Copper Smelters as required under the CAA. Pursuant to the CAA, this action also presents the results of the technology review for the Primary Copper Smelting area source NESHAP.

Based on the results of the risk review, the EPA is proposing that risks from emissions of air toxics from this major source category are unacceptable. The EPA also completed a demographic analysis which indicates that elevated cancer risks associated with emissions from the major source category disproportionately affect communities with environmental justice concerns, including low-income residents, Native Americans, and Hispanics living near these facilities. To address these risks, the EPA is proposing new emissions standards in the major source NESHAP, which will reduce risks to an acceptable level, and is also proposing work practice standards to provide an ample margin of safety to protect public health.

The EPA is also proposing new emissions standards for the major source NESHAP to address currently unregulated emissions of hazardous air pollutants (HAP), as follows: Particulate matter (PM), as a surrogate for particulate HAP metals, for anode refining furnace point source emissions; and PM for roofline emissions from anode refining furnaces, smelting furnaces, and converters. EPA is also proposing new emission standards for mercury emissions from any combination of stacks from dryers, converters, anode refining furnaces, and smelting furnaces. The EPA is proposing test methods for roofline PM emissions and amending the test methods to incorporate by reference three voluntary consensus standards (VCS).

Under the technology review, the EPA identified no developments in practices, processes, or control technologies to achieve further emissions reductions beyond the controls and reductions proposed under the risk review for major sources. With regard to primary copper smelting area sources, the Agency did not identify any developments in practices, processes, or control technologies.

The EPA is also proposing to remove exemptions for periods of startup, shutdown, and malfunction (SSM) and specify that the emission standards apply at all times and require electronic reporting of performance test results and notification of compliance reports. Implementation of these proposed rules is expected to reduce HAP metal emissions from primary copper

smelters, improve human health, and reduce environmental impacts associated with those emissions.

Participation in virtual public hearing. Please note that the EPA is deviating from its typical approach for public hearings because the President has declared a national emergency. Due to the current Centers for Disease Control and Prevention (CDC) recommendations, as well as state and local orders for social distancing to limit the spread of COVID–19, the EPA cannot hold in-person public meetings at this time.

To request a virtual public hearing, contact the public hearing team at (888) 372–8699 or by email at *SPPDpublichearing@epa.gov*. If requested, the virtual hearing will be held on January 26, 2022. The hearing will convene at 9:00 a.m. Eastern Time (ET) and will conclude at 3:00 p.m. ET. The EPA may close a session 15 minutes after the last pre-registered speaker has testified if there are no additional speakers. The EPA will announce further details at *https://www.epa.gov/stationary-sources-air-pollution/primary-copper-smelting-national-emissions-standards-hazardous-air*.

The EPA will begin pre-registering speakers for the hearing upon publication of this document in the **Federal Register**. To register to speak at the virtual hearing, please use the online registration form available at *https://www.epa.gov/stationary-sources-air-pollution/primary-copper-smelting-national-emissions-standards-hazardous-air* or contact the public hearing team at (888) 372–8699 or by email at *SPPDpublichearing@epa.gov*. The last day to pre-register to speak at the hearing will be January 24, 2022. Prior to the hearing, the EPA will post a general agenda that will list pre-registered speakers in approximate order at: *https://www.epa.gov/stationary-sources-air-pollution/primary-copper-smelting-national-emissions-standards-hazardous-air*.

The EPA will make every effort to follow the schedule as closely as possible on the day of the hearing; however, please plan for the hearings to run either ahead of schedule or behind schedule.

Each commenter will have 5 minutes to provide oral testimony. The EPA encourages commenters to provide the EPA with a copy of their oral testimony electronically (via email) by emailing it to *dawson.tonisha@epa.gov*. The EPA also recommends submitting the text of your oral testimony as written comments to the rulemaking docket.

The EPA may ask clarifying questions during the oral presentations but will not respond to the presentations at that time. Written statements and supporting information submitted during the comment period will be considered with the same weight as oral testimony and supporting information presented at the public hearing.

Please note that any updates made to any aspect of the hearing will be posted online at *https://www.epa.gov/stationary-sources-air-pollution/primary-copper-smelting-national-emissions-standards-hazardous-air*. While the EPA expects the hearing to go forward as set forth above, please monitor our website or contact the public hearing team at (888) 372–8699 or by email at *SPPDpublichearing@epa.gov* to determine if there are any updates. The EPA does not intend to publish a document in the **Federal Register** announcing updates.

If you require the services of a translator or a special accommodation such as audio description, please pre-register for the hearing with the public hearing team and describe your needs by January 18, 2022. The EPA may not be able to arrange accommodations without advanced notice.

Docket. The EPA has established a docket for this rulemaking under Docket ID No. EPA–HQ–OAR–2020–0430. All documents in the docket are listed in *https://www.regulations.gov/*. Although listed, some information is not publicly available, *e.g.,* Confidential Business Information (CBI) or other information whose disclosure is restricted by statute. Certain other material, such as copyrighted material, is not placed on the internet and will be publicly available only in hard copy. With the exception of such material, publicly available docket materials are available electronically in *Regulations.gov*.

Instructions. Direct your comments to Docket ID No. EPA–HQ–OAR–2020–0430. The EPA's policy is that all comments received will be included in the public docket without change and may be made available online at *https://www.regulations.gov/,* including any personal information provided, unless the comment includes information claimed to be CBI or other information whose disclosure is restricted by statute. Do not submit electronically any information that you consider to be CBI or other information whose disclosure is restricted by statute. This type of information should be submitted by mail as discussed below.

The EPA may publish any comment received to its public docket. Multimedia submissions (audio, video, etc.) must be accompanied by a written comment. The written comment is considered the official comment and should include discussion of all points you wish to make. The EPA will generally not consider comments or comment contents located outside of the primary submission (*i.e.,* on the Web, cloud, or other file sharing system). For additional submission methods, the full EPA public comment policy, information about CBI or multimedia submissions, and general guidance on making effective comments, please visit *https://www.epa.gov/dockets/commenting-epa-dockets*.

The *https://www.regulations.gov/* website allows you to submit your comment anonymously, which means the EPA will not know your identity or contact information unless you provide it in the body of your comment. If you send an email comment directly to the EPA without going through *https://www.regulations.gov/,* your email address will be automatically captured and included as part of the comment that is placed in the public docket and made available on the internet. If you submit an electronic comment, the EPA recommends that you include your name and other contact information in the body of your comment and with any digital storage media you submit. If the EPA cannot read your comment due to technical difficulties and cannot contact you for clarification, the EPA may not be able to consider your comment. Electronic files should not include special characters or any form of encryption and be free of any defects or viruses. For additional information about the EPA's public docket, visit the EPA Docket Center homepage at *https://www.epa.gov/dockets*.

The EPA is temporarily suspending its Docket Center and Reading Room for public visitors, with limited exceptions, to reduce the risk of transmitting COVID–19. Our Docket Center staff will continue to provide remote customer service via email, phone, and webform. The EPA encourages the public to submit comments via *https://www.regulations.gov/* as there may be a delay in processing mail and faxes. Hand deliveries or couriers will be received by scheduled appointment only. For further information and updates on EPA Docket Center services, please visit us online at *https://www.epa.gov/dockets*.

The EPA continues to carefully and continuously monitor information from the CDC, local area health departments, and our Federal partners so that the Agency can respond rapidly as conditions change regarding COVID–19.

Submitting CBI. Do not submit information containing CBI to the EPA through *https://www.regulations.gov/* or email. Clearly mark all of the

information that you claim to be CBI. For CBI information on any digital storage media that you mail to the EPA, mark the outside of the digital storage media as CBI and then identify electronically within the digital storage media the specific information that is claimed as CBI. In addition to one complete version of the comments that includes information claimed as CBI, you must submit a copy of the comments that does not contain the information claimed as CBI directly to the public docket through the procedures outlined in *Instructions* above. If you submit any digital storage media that does not contain CBI, mark the outside of the digital storage media clearly that it does not contain CBI. Information not marked as CBI will be included in the public docket and the EPA's electronic public docket without prior notice. Information marked as CBI will not be disclosed except in accordance with procedures set forth in 40 Code of Federal Regulations (CFR) part 2. Send or deliver information identified as CBI only to the following address: Office of Air Quality Planning and Standards Document Control Officer (C404–02), OAQPS, U.S. Environmental Protection Agency, Research Triangle Park, North Carolina 27711, Attention Docket ID No. EPA–HQ–OAR–2020–0430. Note that written comments containing CBI and submitted by mail may be delayed and no hand deliveries will be accepted.

Preamble acronyms and abbreviations. The Agency uses multiple acronyms and terms in this preamble. While this list may not be exhaustive, to ease the reading of this preamble and for reference purposes, the EPA defines the following terms and acronyms here:

ACI activated carbon injection
AEGL acute exposure guideline level
AERMOD air dispersion model used by the HEM–4 model
BTF beyond-the-floor
CAA Clean Air Act
CalEPA California EPA
CBI Confidential Business Information
CFR Code of Federal Regulations
mg/dscm milligrams per dry standard cubic meter
ECHO Enforcement and Compliance History Online
EPA Environmental Protection Agency
ERPG emergency response planning guideline
ERT Electronic Reporting Tool
GACT generally available control technology
HAP hazardous air pollutant(s)
HCl hydrochloric acid
HEM–4 Human Exposure Model, Version 1.5.5
HF hydrogen fluoride
HI hazard index
HQ hazard quotient
ICR Information Collection Request
IRIS Integrated Risk Information System
km kilometer
MACT maximum achievable control technology
mg/kg-day milligrams per kilogram per day
mg/m^3 milligrams per cubic meter
MIR maximum individual risk
NAAQS National Ambient Air Quality Standards
NAICS North American Industry Classification System
NEI National Emissions Inventory
NESHAP national emission standards for hazardous air pollutants
NTTAA National Technology Transfer and Advancement Act
OAQPS Office of Air Quality Planning and Standards
OMB Office of Management and Budget
PB–HAP hazardous air pollutants known to be persistent and bio-accumulative in the environment
PM particulate matter
POM polycyclic organic matter
ppm parts per million
RBLC Reasonably Available Control Technology, Best Available Control Technology, and Lowest Achievable Emission Rate Clearinghouse
RfC reference concentration
RTR residual risk and technology review
SAB Science Advisory Board
SV screening value
SSM startup, shutdown, and malfunction
TOSHI target organ-specific hazard index
tpy tons per year
TRIM.FaTE Total Risk Integrated Methodology.Fate, Transport, and Ecological Exposure model
UF uncertainty factor
μg/m^3 microgram per cubic meter
URE unit risk estimate
USGS U.S. Geological Survey
VCS voluntary consensus standards

Organization of this document. The information in this preamble is organized as follows:

I. General Information
A. Does this action apply to me?
B. Where can I get a copy of this document and other related information?
II. Background
A. What is the statutory authority for this action?
B. What is this source category and how does the current NESHAP regulate its HAP emissions?
C. What data collection activities were conducted to support this action?
D. What other relevant background information and data are available?
III. Analytical Procedures and Decision-Making
A. How do we consider risk in our decision-making?
B. How do we perform the technology review?
C. How do we estimate post-MACT risk posed by the source category?
IV. Analytical Results and Proposed Decisions
A. What actions are we taking pursuant to CAA sections 112(d)(2) and 112(d)(3)?
B. What are the results of the risk assessment and analyses?
C. What are our proposed decisions regarding risk acceptability, ample margin of safety, and adverse environmental effect?
D. What are the results and proposed decisions based on our technology review?
E. What other actions are we proposing?
F. What compliance dates are we proposing?
V. Summary of Cost, Environmental, and Economic Impacts
A. What are the affected sources?
B. What are the air quality impacts?
C. What are the cost impacts?
D. What are the economic impacts?
E. What are the benefits?
VI. Request for Comments
VII. Submitting Data Corrections
VIII. Incorporation by Reference
IX. Statutory and Executive Order Reviews
A. Executive Order 12866: Regulatory Planning and Review and Executive Order 13563: Improving Regulation and Regulatory Review
B. Paperwork Reduction Act (PRA)
C. Regulatory Flexibility Act (RFA)
D. Unfunded Mandates Reform Act (UMRA)
E. Executive Order 13132: Federalism
F. Executive Order 13175: Consultation and Coordination With Indian Tribal Governments
G. Executive Order 13045: Protection of Children From Environmental Health Risks and Safety Risks and 1 CFR part 51
H. Executive Order 13211: Actions Concerning Regulations That Significantly Affect Energy Supply, Distribution, or Use
I. National Technology Transfer and Advancement Act (NTTAA)
J. Executive Order 12898: Federal Actions To Address Environmental Justice in Minority Populations and Low-Income Populations

I. General Information

A. Does this action apply to me?

The source categories that are the subject of this proposal are Primary Copper Smelting Major Sources regulated under 40 CFR part 63, subpart QQQ, and Primary Copper Smelting Area Sources, regulated under 40 CFR part 63, subpart EEEEEE. The North American Industry Classification System (NAICS) code for the primary copper smelting industry is 331410. This list of categories and NAICS codes is not intended to be exhaustive, but rather provides a guide for readers regarding the entities that this proposed action is likely to affect. The proposed standards, once promulgated, will be directly applicable to the affected sources. State, local, and tribal governments would not be directly affected by this proposed action. As defined in the *Initial List of Categories of Sources Under Section 112(c)(1) of*

the Clean Air Act Amendments of 1990 (see 57 FR 31576, July 16, 1992) and *Documentation for Developing the Initial Source Category List, Final Report* (*see* EPA–450/3–91–030, July 1992), the Primary Copper Smelting major source category was defined as any major source facility engaged in the pyrometallurgical process used for the extraction of copper from sulfur oxides, native ore concentrates, or other copper bearing minerals. As originally defined, the category includes, but is not limited to, the following smelting process units: Roasters, smelting furnaces, and converters. Affected sources under the current major source NESHAP are concentrate dryers, smelting furnaces, slag cleaning vessels, converters, and fugitive emission sources. The area source category was added to the source category list in 2002 (67 FR 70427, 70428). Affected sources under the area source NESHAP are concentrate dryers, smelting vessels (*e.g.,* furnaces), converting vessels, matte drying and grinding plants, secondary gas systems, and anode refining operations.

B. Where can I get a copy of this document and other related information?

In addition to being available in the docket, an electronic copy of this action is available on the internet. Following signature by the EPA Administrator, the EPA will post a copy of this proposed action at *https://www.epa.gov/stationary-sources-air-pollution/primary-copper-smelting-national-emissions-standards-hazardous-air* and at *https://www.epa.gov/stationary-sources-air-pollution/primary-copper-smelting-area-sources-national-emissions-standards*. Following publication in the **Federal Register**, the EPA will post the **Federal Register** version of the proposal and key technical documents at these same websites. Information on the overall RTR program is available at *https://www.epa.gov/stationary-sources-air-pollution/risk-and-technology-review-national-emissions-standards-hazardous*.

The proposed changes to the CFR that would be necessary to incorporate the changes proposed in this action are presented in attachments to the two memoranda titled: *Proposed Regulation Edits for 40 CFR part 63, subpart QQQ: Primary Copper Smelting NESHAP Risk and Technology Review Proposal*; and *Proposed Regulatory Edits for 40 CFR part 63 Subpart EEEEEE: Primary Copper Smelting Area Sources NESHAP Technology Review Proposal,* both of which are available in the docket for this action (Docket ID No. EPA–HQ–OAR–2020–0430). These documents include redline versions of the two regulations. Following signature by the EPA Administrator, the EPA will also post a copy of these two memoranda and the attachments to *https://www.epa.gov/stationary-sources-air-pollution/primary-copper-smelting-national-emissions-standards-hazardous-air* and to *https://www.epa.gov/stationary-sources-air-pollution/primary-copper-smelting-area-sources-national-emissions-standards*.

II. Background

A. What is the statutory authority for this action?

The statutory authority for this action is provided by sections 112 and 301 of the CAA, as amended (42 U.S.C. 7401 *et seq.*). Section 112 of the CAA establishes a two-stage regulatory process to develop standards for emissions of HAP from stationary sources. Generally, the first stage involves establishing technology-based standards and the second stage involves evaluating those standards that are based on maximum achievable control technology (MACT) to determine whether additional standards are needed to address any remaining risk associated with HAP emissions. This second stage is required under CAA section 112(f) and is commonly referred to as the ''residual risk review.'' In addition to the residual risk review, section 112(d)(6) of the CAA requires the EPA to review standards set under CAA section 112 every 8 years and revise the standards as necessary taking into account any ''developments in practices, processes, or control technologies.'' This review is commonly referred to as the ''technology review.'' When the two reviews are combined into a single rulemaking, it is commonly referred to as the ''risk and technology review.'' The discussion that follows identifies the most relevant statutory sections and briefly explains the contours of the methodology used to implement these statutory requirements. A more comprehensive discussion appears in the document titled *CAA Section 112 Risk and Technology Reviews: Statutory Authority and Methodology,* in the docket for this rulemaking.

In the first stage of the CAA section 112 standard setting process, the EPA promulgates technology-based standards under CAA section 112(d) for categories of sources identified as emitting one or more of the HAP listed in CAA section 112(b). Sources of HAP emissions are either major sources or area sources, and CAA section 112 establishes different requirements for major source standards and area source standards. ''Major sources'' are those that emit or have the potential to emit 10 tons per year (tpy) or more of a single HAP or 25 tpy or more of any combination of HAP. All other sources are ''area sources.'' For major sources, CAA section 112(d)(2) provides that the technology-based NESHAP must reflect the maximum degree of emission reductions of HAP achievable (after considering cost, energy requirements, and non-air quality health and environmental impacts). These standards are commonly referred to as MACT standards. CAA section 112(d)(3) also establishes a minimum control level for MACT standards, known as the MACT ''floor.'' In certain instances, as provided in CAA section 112(h), the EPA may set work practice standards in lieu of numerical emission standards. The EPA must also consider control options that are more stringent than the floor. Standards more stringent than the floor are commonly referred to as beyond-the-floor (BTF) standards. For area sources, CAA section 112(d)(5) gives the EPA discretion to set standards based on generally available control technologies or management practices (GACT standards) in lieu of MACT standards.

The second stage in standard-setting focuses on identifying and addressing any remaining (*i.e.,* ''residual'') risk pursuant to CAA section 112(f). For source categories subject to MACT standards, section 112(f)(2) of the CAA requires the EPA to determine whether promulgation of additional standards is needed to provide an ample margin of safety to protect public health or to prevent an adverse environmental effect. Section 112(d)(5) of the CAA provides that this residual risk review is not required for categories of area sources subject to GACT standards. Section 112(f)(2)(B) of the CAA further expressly preserves the EPA's use of the two-step approach for developing standards to address any residual risk and the Agency's interpretation of ''ample margin of safety'' developed in the National Emissions Standards for Hazardous Air Pollutants: Benzene Emissions from Maleic Anhydride Plants, Ethylbenzene/Styrene Plants, Benzene Storage Vessels, Benzene Equipment Leaks, and Coke By-Product Recovery Plants (Benzene NESHAP) (54 FR 38044, September 14, 1989). The EPA notified Congress in the Residual Risk Report that the Agency intended to use the Benzene NESHAP approach in making CAA section 112(f) residual risk

determinations (EPA–453/R–99–001, p. ES–11). The EPA subsequently adopted this approach in its residual risk determinations and the United States Court of Appeals for the District of Columbia Circuit upheld the EPA's interpretation that CAA section 112(f)(2) incorporates the approach established in the Benzene NESHAP. See *NRDC* v. *EPA,* 529 F.3d 1077, 1083 (D.C. Cir. 2008).

The approach incorporated into the CAA and used by the EPA to evaluate residual risk and to develop standards under CAA section 112(f)(2) is a two-step approach. In the first step, the EPA determines whether risks are acceptable. This determination ''considers all health information, including risk estimation uncertainty, and includes a presumptive limit on maximum individual lifetime [cancer] risk (MIR) [1] of approximately 1 in 10 thousand.'' (54 FR at 38045). If risks are unacceptable, the EPA must determine the emissions standards necessary to reduce risk to an acceptable level without considering costs. In the second step of the approach, the EPA considers whether the emissions standards provide an ample margin of safety to protect public health ''in consideration of all health information, including the number of persons at risk levels higher than approximately 1 in 1 million, as well as other relevant factors, including costs and economic impacts, technological feasibility, and other factors relevant to each particular decision.'' *Id.* The EPA must promulgate emission standards necessary to provide an ample margin of safety to protect public health or determine that the standards being reviewed provide an ample margin of safety without any revisions. After conducting the ample margin of safety analysis, the Agency considers whether a more stringent standard is necessary to prevent, taking into consideration costs, energy, safety, and other relevant factors, an adverse environmental effect.

CAA section 112(d)(6) separately requires the EPA to review standards promulgated under CAA section 112 and revise them ''as necessary (taking into account developments in practices, processes, and control technologies)'' no less often than every 8 years. While conducting the technology review, the EPA is not required to recalculate the MACT floor. *Natural Resources Defense Council (NRDC)* v. *EPA,* 529 F.3d 1077, 1084 (D.C. Cir. 2008). *Association of Battery Recyclers, Inc.* v. *EPA,* 716 F.3d 667 (D.C. Cir. 2013). The EPA may consider cost in deciding whether to revise the standards pursuant to CAA section 112(d)(6). The EPA is required to address regulatory gaps, such as missing standards for listed air toxics known to be emitted from the source category. *Louisiana Environmental Action Network (LEAN)* v. *EPA,* 955 F.3d 1088 (D.C. Cir. 2020).

B. What is this source category and how does the current NESHAP regulate its HAP emissions?

The primary copper smelting source category includes any facility that uses a pyrometallurgical process to produce anode copper from copper ore concentrates. Primary copper smelting begins with copper mines supplying the ore concentrate (typically 30 percent copper). In most cases, the moisture is reduced from the ore concentrate in dryers, and then fed through a smelting furnace where it is melted and reacts to produce copper matte. One existing smelter is able to feed its copper concentrate directly to the smelting furnace without prior drying. Copper matte is a molten solution of copper sulfide mixed with iron sulfide and is about 60 percent copper. The solution is further refined using converters to make blister copper, which is approximately 98 percent copper. Converters use oxidation to remove sulfide as sulfur dioxide (SO_2) gas and the iron as a ferrous oxide slag. The majority of the SO_2 gases are sent to a sulfuric acid plant. The slag is removed, cooled, and often processed again to remove any residual copper. The blister copper is reduced in the anode furnace to remove impurities and oxygen, typically by injecting natural gas and steam, to produce a high purity copper. The molten copper from the anode refining furnace is poured into molds and cooled to produce solid copper ingots called anodes. This process is known as casting. The anodes are sent to a copper refinery, either on-site or at an off-site location, for further purification using an electrolytic process to obtain high purity copper that is sold as a product.

The processing units of interest at primary copper smelters, because of their potential to generate HAP emissions, are the following: Dryers, smelting furnaces, copper converters, anode refining furnaces, and, if present, copper holding vessels, slag cleaning vessels, and matte drying and grinding plants. In addition, fugitive emissions are sources of HAP at primary copper smelters. The transfer of matte, converter slag, and blister copper is the primary source of fugitive emissions.

There are three primary copper smelting facilities in the U.S. that are subject to the NESHAPs in this review. Two of the facilities (Asarco and Freeport—both located in Arizona) are major sources of HAP emissions and are subject to subpart QQQ, the major source NESHAP; the third facility (Kennecott—located in Utah) is an area source and subject to subpart EEEEEE, the area source NESHAP.

Two of the facilities (Asarco and Kennecott) use flash smelting furnaces (the INCO smelting furnace and the Outotec®, respectively). Flash smelting furnaces consist of blowing fine, dried copper sulfide concentrate and silica flux with air, oxygen-enriched air or oxygen into a hot hearth-type furnace. The sulfide minerals in the concentrate react with oxygen resulting in oxidation of the iron and sulfur, which produces heat and therefore melting of the solids. The molten matte and slag are removed separately from the furnace as they accumulate, and at the facility using the INCO furnace, the matte is transferred via ladles to the copper converters. The Freeport facility uses an ISA smelting furnace. The ISA smelt® process involves dropping wet feed through a feed port, such that dryers are not needed. A mixture of air, oxygen, and natural gas is blown through a vertical lance in the center of the furnace, generating heat and melting the feed. The molten metal is then tapped from the bottom and sent to an electric furnace to separate the matte from slag. The slag is removed from the electric furnace through tapholes and is transferred to slag pots via ladles. The matte is also removed from the electric furnace through tapholes and transferred to the converter via ladles.

At the area source primary copper smelter, molten copper matte tapped from the Outotec® smelting furnace is not transferred as molten material directly to the converting vessel as is performed at the two major source smelters. Instead, the matte is first quenched with water to form solid granules of copper matte. These matte granules are then ground to a finer texture and fed to the flash converting furnace for the continuous converting of copper. The continuous copper converter differs significantly in design and operation from the cylindrical batch converters operated at the other U.S. smelters. Because there are no transfers of molten material between the smelting furnace and the continuous copper converter, this technology has inherently lower potential HAP emissions than a smelter using batch copper converting technology.

[1] Although defined as ''maximum individual risk,'' MIR refers only to cancer risk. MIR, one metric for assessing cancer risk, is the estimated risk if an individual were exposed to the maximum level of a pollutant for a lifetime.

Molten blister copper is transferred from the converting vessel to an anode furnace for refining to further remove residual impurities and oxygen. The blister copper is reduced in the anode refining furnace to remove oxygen, typically by injecting natural gas and steam to produce a high purity copper. The molten copper from the anode refining furnace is poured into molds to produce solid copper ingots called anodes. The anode copper is sent to a copper refinery, either on-site or at another location, where it is further purified using an electrolytic process to obtain the high purity copper that is sold as a product. The copper refinery is not part of the primary copper smelting source category.

The current NESHAP for major sources (40 CFR part 63, subpart QQQ) was proposed on April 20, 1998 (63 FR 19582), with a supplement to the proposed rule published on June 26, 2000 (65 FR 39326). The final rule, promulgated on June 12, 2002 (67 FR 40478), established PM standards as a surrogate for HAP metals for copper concentrate dryers, smelting furnaces, slag cleaning vessels, and existing converters. The major source NESHAP applies to major sources that use batch copper converters. Regarding new sources, the NESHAP prohibits batch converters for new sources, which indirectly means that any new source would need to have continuous converters, similar to the area source (Kennecott), or another technology. The converter building is subject to an opacity limit that only applies during performance testing. A fugitive dust plan is required to minimize fugitive dust emissions. Subpart QQQ also establishes requirements to demonstrate initial and continuous compliance with all applicable emission limitations, work practice standards, and operation and maintenance requirements. Annual performance testing is required to demonstrate compliance.

The NESHAP for area sources (40 CFR part 63, subpart EEEEEE) establishes GACT standards for primary copper smelting area sources and was proposed on October 6, 2006 (71 FR 59302), and finalized on January 23, 2007 (72 FR 2930). Technical corrections were then published on July 3, 2007, via direct final rule (72 FR 36363). The affected sources (*i.e.,* copper concentrate dryers, smelting vessels, converting vessels, matte drying and grinding plants, secondary gas systems and anode refining departments) are subject to PM limits as a surrogate for HAP metals. Compliance must be demonstrated by performance tests conducted every 2.5 years.

C. What data collection activities were conducted to support this action?

For the Primary Copper Smelting source category, the EPA used the best available data. Initially, emissions and supporting data from the 2017 National Emissions Inventory (NEI) were gathered to develop the initial draft model input file for the residual risk assessments for major source primary copper smelters. The NEI is a database that contains information about sources that emit criteria air pollutants, their precursors, and HAP. The database includes estimates of annual air pollutant emission from point, nonpoint, and mobile sources in the 50 states, the District of Columbia, Puerto Rico, and the U.S. Virgin Islands. The EPA collects this information and releases an updated version of the NEI database every 3 years. The NEI includes data necessary for conducting risk modeling, including annual HAP emissions estimates from individual emission sources at facilities and the related emissions release parameters.

The Arizona Department of Environmental Quality (ADEQ) provided 2018 emissions test data for both major source primary copper smelters located in that state, which allowed the EPA to use more current metal HAP emissions data than what was available in the 2017 NEI in some cases. The data from ADEQ and the NEI were used to develop an initial draft risk model input file. This initial draft model file was posted to the EPA's Primary Copper website on February 26, 2020, and stakeholders were provided an opportunity to voluntarily review and provide input regarding the sources of emissions and release parameters that were reported in the NEI. The Asarco and Freeport facilities provided input, and the modeling file was finalized. The data include multiple emissions test reports for PM and HAP metals for point source emissions from both facilities and seven test reports for emissions tests conducted in 2018, 2019 and 2020 for process fugitive emissions for anode refining, smelting furnaces and converters at Freeport. However, we have no test data for Asarco process fugitive emissions. The process fugitive emissions estimates for Asarco are based on emissions factors and process information. Therefore, we have higher confidence and less uncertainty with our emissions estimates for Freeport as compared to Asarco. We made an adjustment to the lead emissions estimates from the anode refining roofline at Freeport by applying a weighting factor to one of the 2018 test results. This factor is based on information in the document titled: *Technical Report on Test Method for Roofline Lead Emissions, Operational Influences During Testing, And Effect of Smelter Reconfiguration,* by Trinity Consultants, December 2018, which is available in the docket for this action. The data and data sources used to support this action and additional information on the development of the modeling file are described in Appendix 1 to the *Residual Risk Assessment for the Primary Copper Smelting Major Source Category in Support of the 2021 Risk and Technology Review Proposed Rule,* which is available in the docket for this proposed rule (Docket ID No. EPA–HQ–OAR–2020–0430). Additional information is provided in section II.D below.

D. What other relevant background information and data are available?

The EPA used multiple sources of information to support this proposed action. Before developing the final list of affected facilities described in section II.B of this preamble, the EPA's Enforcement and Compliance History Online (ECHO) database was used as a tool to identify potentially affected facilities with primary copper smelting operations that are subject to the NESHAPs. The ECHO database provides integrated compliance and enforcement information for approximately 800,000 regulated facilities nationwide. The EPA also reviewed the compliance history on the ADEQ website, active consent decrees, and consent orders to verify that the facilities were accurately classified as major sources.

During the technology review, the EPA examined information in the Reasonably Available Control Technology (RACT)/Best Available Control Technology (BACT)/Lowest Achievable Emission Rate (LAER) Clearinghouse (RBLC) to identify technologies in use and determine whether there have been relevant developments in practices, processes, or control technologies. The RBLC is a database that contains case specific information on air pollution technologies that have been required to reduce the emissions of air pollutants from stationary sources. Under the EPA's New Source Review (NSR) program, if a facility is planning new construction or a modification that will significantly increase air emissions, an NSR permit must be obtained. This central database promotes the sharing of information among permitting agencies and aids in case-by-case determinations for NSR permits. The EPA also reviewed subsequent air toxics regulatory actions for other source categories and

information from a virtual site visit at the Freeport plant to determine whether there have been developments in practices, processes, or control technologies in the Primary Copper Smelting source category. The docket for this rulemaking contains the following document which provides more information on the technology review: *Final Technology Review for the Primary Copper Smelting Source Category*.

III. Analytical Procedures and Decision-Making

In this section, the Agency describes the analyses performed to support the proposed decisions for the RTR and other issues addressed in this proposal. In this proposed action, pursuant to CAA section 112(f), the EPA conducted a risk review for the major sources in the primary copper smelting source category. Consistent with CAA section 112(f)(5), the risk review did not cover the area source category. Therefore, the discussions of risk assessment procedures described in the following paragraphs apply only to the major source category. However, pursuant to CAA section 112(d)(6), the EPA conducted a technology review for the NESHAPs covering both the major source category and the area source category (40 CFR part 63, subpart EEEEEE). Therefore, the following discussions of the technology reviews apply to both major sources and area sources.

A. How do we consider risk in our decision-making?

As discussed in section II.A of this preamble and in the Benzene NESHAP, in evaluating and developing standards under CAA section 112(f)(2), the Agency applies a two-step approach to determine whether or not risks are acceptable and to determine if the standards provide an ample margin of safety to protect public health. As explained in the Benzene NESHAP, ''the first step judgment on acceptability cannot be reduced to any single factor'' and, thus, ''[t]he Administrator believes that the acceptability of risk under section 112 is best judged on the basis of a broad set of health risk measures and information.'' (54 FR at 38046). Similarly, with regard to the ample margin of safety determination, ''the Agency again considers all of the health risk and other health information considered in the first step. Beyond that information, additional factors relating to the appropriate level of control will also be considered, including cost and economic impacts of controls, technological feasibility, uncertainties, and any other relevant factors.'' *Id.*

The Benzene NESHAP approach provides flexibility regarding factors the EPA may consider in making determinations and how the EPA may weigh those factors for each source category. The EPA conducts a risk assessment that provides estimates of the MIR posed by emissions of HAP that are carcinogens from each source in the source category, the hazard index (HI) for chronic exposures to HAP with the potential to cause noncancer health effects, and the hazard quotient (HQ) for acute exposures to HAP with the potential to cause noncancer health effects.[2] The assessment also provides estimates of the distribution of cancer risk within the exposed populations, cancer incidence, and an evaluation of the potential for an adverse environmental effect. The scope of the EPA's risk analysis is consistent with the explanation in EPA's response to comments on our policy under the Benzene NESHAP:

> The policy chosen by the Administrator permits consideration of multiple measures of health risk. Not only can the MIR figure be considered, but also incidence, the presence of noncancer health effects, and the uncertainties of the risk estimates. In this way, the effect on the most exposed individuals can be reviewed as well as the impact on the general public. These factors can then be weighed in each individual case. This approach complies with the *Vinyl Chloride* mandate that the Administrator ascertain an acceptable level of risk to the public by employing his expertise to assess available data. It also complies with the Congressional intent behind the CAA, which did not exclude the use of any particular measure of public health risk from the EPA's consideration with respect to CAA section 112 regulations, and thereby implicitly permits consideration of any and all measures of health risk which the Administrator, in his judgment, believes are appropriate to determining what will ''protect the public health''.

(54 FR at 38057). Thus, the level of the MIR is only one factor to be weighed in determining acceptability of risk. The Benzene NESHAP explained that ''an MIR of approximately one in 10 thousand should ordinarily be the upper end of the range of acceptability. As risks increase above this benchmark, they become presumptively less acceptable under CAA section 112, and would be weighed with the other health risk measures and information in making an overall judgment on acceptability. Or, the Agency may find, in a particular case, that a risk that includes an MIR less than the presumptively acceptable level is unacceptable in the light of other health risk factors.'' *Id.* at 38045. In other words, risks that include an MIR above 100-in-1 million may be determined to be acceptable, and risks with an MIR below that level may be determined to be unacceptable, depending on all of the available health information. Similarly, with regard to the ample margin of safety analysis, the EPA stated in the Benzene NESHAP that: ''EPA believes the relative weight of the many factors that can be considered in selecting an ample margin of safety can only be determined for each specific source category. This occurs mainly because technological and economic factors (along with the health-related factors) vary from source category to source category.'' *Id.* at 38061. The Agency also considers the uncertainties associated with the various risk analyses, as discussed earlier in this preamble, in our determinations of acceptability and ample margin of safety.

The EPA notes that it has not considered certain health information to date in making residual risk determinations. At this time, the Agency does not attempt to quantify the HAP risk that may be associated with emissions from other facilities that do not include the source category under review, mobile source emissions, natural source emissions, persistent environmental pollution, or atmospheric transformation in the vicinity of the sources in the category.

The EPA understands the potential importance of considering an individual's total exposure to HAP in addition to considering exposure to HAP emissions from the source category and facility. The Agency recognizes that such consideration may be particularly important when assessing noncancer risk, where pollutant-specific exposure health reference levels (*e.g.,* reference concentrations (RfCs)) are based on the assumption that thresholds exist for adverse health effects. For example, the EPA recognizes that, although exposures attributable to emissions from a source category or facility alone may not indicate the potential for increased risk of adverse noncancer health effects in a population, the exposures resulting from emissions from the facility in combination with emissions from all of the other sources (*e.g.,* other facilities) to which an individual is exposed may be sufficient to result in an increased risk of adverse noncancer health effects. In May 2010, the Science Advisory Board

[2] The MIR is defined as the cancer risk associated with a lifetime of exposure at the highest concentration of HAP where people are likely to live. The HQ is the ratio of the potential HAP exposure concentration to the noncancer dose-response value; the HI is the sum of HQs for HAP that affect the same target organ or organ system.

(SAB) advised the EPA ''that RTR assessments will be most useful to decision makers and communities if results are presented in the broader context of aggregate and cumulative risks, including background concentrations and contributions from other sources in the area.'' [3]

In response to the SAB recommendations, the EPA incorporates cumulative risk analyses into its RTR risk assessments. The Agency (1) conducts facility-wide assessments, which include source category emission points, as well as other emission points within the facilities; (2) combines exposures from multiple sources in the same category that could affect the same individuals; and (3) for some persistent and bioaccumulative pollutants, analyzes the ingestion route of exposure. In addition, the RTR risk assessments consider aggregate cancer risk from all carcinogens and aggregated noncancer HQs for all noncarcinogens affecting the same target organ or target organ system.

Although the EPA is interested in placing source category and facility-wide HAP risk in the context of total HAP risk from all sources combined in the vicinity of each source, the EPA is also concerned about the uncertainties of doing so. Estimates of total HAP risk from emission sources other than those that the Agency has studied in depth during this RTR review would have significantly greater associated uncertainties than the source category or facility-wide estimates. Such aggregate or cumulative assessments would compound those uncertainties, making the assessments too unreliable.

B. How do we perform the technology review?

Our technology review primarily focuses on the identification and evaluation of developments in practices, processes, and control technologies that have occurred since the MACT standards were promulgated. Where we identify such developments, we analyze their technical feasibility, estimated costs, energy implications, and non-air environmental impacts. The EPA also considers the emission reductions associated with applying each development. This analysis informs our decision of whether it is ''necessary'' to revise the emissions standards. In addition, the Agency considers the appropriateness of applying controls to new sources versus retrofitting existing sources. For this exercise, the EPA considers any of the following to be a ''development'':

- Any add-on control technology or other equipment that was not identified and considered during development of the original MACT standards;
- Any improvements in add-on control technology or other equipment (that were identified and considered during development of the original MACT standards) that could result in additional emissions reduction;
- Any work practice or operational procedure that was not identified or considered during development of the original MACT standards;
- Any process change or pollution prevention alternative that could be broadly applied to the industry and that was not identified or considered during development of the original MACT standards; and
- Any significant changes in the cost (including cost effectiveness) of applying controls (including controls the EPA considered during the development of the original MACT standards).

In addition to reviewing the practices, processes, and control technologies that were considered at the time the EPA originally developed the NESHAP, we review a variety of data sources in our investigation of potential practices, processes, or controls to consider. The EPA also reviews the NESHAP and the available data to determine if there are any unregulated emissions of HAP within the source category, and evaluate the data for use in developing new emission standards. See sections II.C and II.D of this preamble for information on the specific data sources that were reviewed as part of the technology review.

C. How do we estimate post-MACT risk posed by the source category?

In this section, the EPA provides a complete description of the types of analyses that we generally perform during the risk assessment process. In some cases, the Agency does not perform a specific analysis because it is not relevant. For example, in the absence of emissions of hazardous air pollutants known to be persistent and bioaccumulative in the environment (PB–HAP), the Agency would not perform a multipathway exposure assessment. If an analysis is not performed, the Agency will provide the reason. While we present all of our risk assessment methods, the Agency only presents risk assessment results for the analyses actually conducted (see section IV.B of this preamble).

The EPA conducts a risk assessment that provides estimates of the MIR for cancer posed by the HAP emissions from each source in the source category, the HI for chronic exposures to HAP with the potential to cause noncancer health effects, and the HQ for acute exposures to HAP with the potential to cause noncancer health effects. The assessment also provides estimates of the distribution of cancer risk within the exposed populations, cancer incidence, and an evaluation of the potential for an adverse environmental effect. The eight sections that follow this paragraph describe how the Agency estimated emissions and conducted the risk assessment. The docket for this rulemaking contains the following document which provides more information on the risk assessment inputs and models: *Residual Risk Assessment for the Primary Copper Smelting Major Source Category in Support of the 2021 Risk and Technology Review Proposed Rule*. The methods used to assess risk (as described in the eight primary steps below) are consistent with those described by the EPA in the document reviewed by a panel of the EPA's SAB in 2009 [4] and described in the SAB review report issued in 2010. They are also consistent with the key recommendations contained in that report.

1. How did we estimate actual emissions and identify the emissions release characteristics?

To create the initial modeling input file, the Agency gathered actual HAP emissions data from the 2017 NEI and 2018 emissions estimates provided by ADEQ. The 2019 emissions data for Asarco and Freeport were not available when the initial modeling input file was developed. The Asarco plant's smelting operation was shut down for a significant portion of 2018 due to equipment upgrades. Since the 2019 emissions data for Asarco were not available, the 2017 NEI data were used for the initial modeling input file. The Freeport plant made significant upgrades in 2017, so the 2018 emissions data were used for the initial modeling input file as the best representation of the current plant configuration. The modeling input file was posted on the EPA website on February 26, 2020, for

[3] Recommendations of the SAB Risk and Technology Review Methods Panel are provided in their report, which is available at: *https://yosemite.epa.gov/sab/sabproduct.nsf/4AB3966E263D943A8525771F00668381/$File/EPA-SAB-10-007-unsigned.pdf.*

[4] U.S. EPA. *Risk and Technology Review (RTR) Risk Assessment Methodologies: For Review by the EPA's Science Advisory Board with Case Studies—MACT I Petroleum Refining Sources and Portland Cement Manufacturing,* June 2009. EPA–452/R–09–006. *https://www.epa.gov/stationary-sources-air-pollution/risk-and-technology-review-national-emissions-standards-hazardous.*

public review. Asarco and Freeport provided comments, revisions to the initial modeling file, and supporting documents, which consisted of 2019 emissions data and various performance test reports. The data provided by both facilities were used to develop the final modeling input file.

For each NEI record, the EPA reviewed the standard classification code (SCC) and emission unit and process descriptions, and assigned the record to one of the emission process groups (*i.e.,* Anode Furnaces; Anode Refining Roofline; Combustion; Converters; Anode Furnaces and Converters; Converters Roofline; Dryers, Furnaces, Converters and Acid Plant; Non-process Fugitives; Rod Plant; Smelting Furnace Roofline; Smelting Furnace Secondary; Smelting Furnaces and Converters).

If the SCC and emission unit and process descriptions were ambiguous for a specific NEI record, the Agency used the facility air permits and flow diagrams to help us assign the appropriate emission process group. Both facilities have many combined gas streams that vent to a common control system and/or stack. In those cases, there may be multiple emissions sources included in the Emission Process Group Description. For example, at Asarco, the exhaust gases from the two dryers and flash furnace are vented to the same baghouse. The facility has a sampling port at the exhaust of the baghouse to measure emissions during performance testing. The emission sources associated with this example are represented by ''Dryers and Flash Furnace'' under the Emission Process Group Description.

The EPA did not conduct a risk review pursuant to section 112(f) of the CAA for Kennecott since it is an area source subject to GACT standards (not MACT standards). However, we did obtain emissions estimates and evaluated some information on ambient monitoring data near the facility.

Based on reported 2017 estimates to the NEI, Kennecott emits an estimated 5.6 tpy of lead and 1.6 tpy of arsenic. However, we do not have any HAP metals emissions test data for Kennecott. Therefore, we consider these estimates uncertain and we are soliciting comments, data and additional information regarding these emissions estimates.

With regard to ambient monitoring data, Utah Division of Air Quality (DAQ) conducted lead monitoring at the Magna station near the Kennecott copper smelter from January 2010 through June 2017 (see Figure 18 of the memorandum titled *Emissions Data Used for Primary Copper Smelting Risk and Technology Review (RTR) Modeling Files*). At that time Utah DAQ was able to demonstrate that the likelihood of violating the National Ambient Air Quality Standard (NAAQS) for lead was so low, it would no longer be necessary to run the monitor. With EPA's concurrence, the Magna lead monitor was shut down in June 2017. Utah DAQ and the EPA continue to evaluate the development of requirements, such as source emission thresholds, population, and NAAQS revisions, that may trigger the necessity to resume monitoring lead in Utah.[5] Nevertheless, the Agency solicits comments, data and additional information regarding these ambient monitoring data and how they should be considered in the context of the EPA's technology review of the Primary Copper Smelting area source NESHAP.

2. How did we estimate MACT-allowable emissions?

The available emissions data in the RTR emissions dataset include estimates of the mass of HAP emitted during a specified annual time period. These ''actual'' emission levels are often lower than the emission levels allowed under the requirements of the current MACT standards. The emissions allowed under the MACT standards are referred to as the ''MACT-allowable'' emissions. The Agency discussed the consideration of both MACT-allowable and actual emissions in the final Coke Oven Batteries RTR (70 FR 19992, 19998–19999, April 15, 2005) and in the proposed and final Hazardous Organic NESHAP RTR (71 FR 34421, 34428, June 14, 2006, and 71 FR 76603, 76609, December 21, 2006, respectively). In those actions, the Agency noted that assessing the risk at the MACT-allowable level is inherently reasonable since that risk reflects the maximum level facilities could emit and still comply with national emission standards. The EPA also explained that it is reasonable to consider actual emissions, where such data are available, in both steps of the risk analysis, in accordance with the Benzene NESHAP approach. (54 FR 38044.)

The current Primary Copper Smelting NESHAP specifies numerical emission standards for each copper concentrate dryer, smelting vessel, and slag cleaning vessel. Consequently, the MACT-allowable emissions for each of these emission sources are assumed to be equal to the numerical emission standard. The NESHAP specifies work practice standards for fugitive dust sources. Therefore, the Agency believes that the actual fugitive dust sources emission levels are a reasonable estimation of the MACT-allowable emissions levels. The current NESHAP does not include standards for anode refining departments, anode refining rooflines, converter rooflines and smelting furnace rooflines. However, the EPA has determined that these sources are part of the source category and plans to propose MACT standards with this RTR. The MACT-allowable emissions for our baseline risk assessment for the anode refining departments, anode refining rooflines, converter rooflines and smelting furnace rooflines are assumed to be equal to the actual emissions, which are the estimated emissions prior to implementation of the proposed MACT standards.

For further details on the assumptions and methodologies used to estimate MACT-allowable emissions, see Appendix X of the document titled *Emissions Data Used for Primary Copper Smelting Risk and Technology Review (RTR) Modeling Files,* which is available in the docket for this rulemaking.

3. How do we conduct dispersion modeling, determine inhalation exposures, and estimate individual and population inhalation risk?

Both long-term and short-term inhalation exposure concentrations and health risk from the source category addressed in this proposal were estimated using the Human Exposure Model, Version 1.5.5(HEM–4).[6] The HEM–4 performs three primary risk assessment activities: (1) Conducting dispersion modeling to estimate the concentrations of HAP in ambient air, (2) estimating long-term and short-term inhalation exposures to individuals residing within 50 kilometers (km) of the modeled sources, and (3) estimating individual and population-level inhalation risk using the exposure estimates and quantitative dose-response information.

a. Dispersion Modeling

The air dispersion model AERMOD, used by the HEM–4 model, is one of the EPA's preferred models for assessing air pollutant concentrations from industrial facilities.[7] To perform the dispersion

[5] *Utah Division of Air Quality 2019 Annual Report.* 2019. Utah Department of Environmental Quality—Air Quality. Available at: *https://deq.utah.gov/air-quality/annual-reports-division-of-air-quality.*

[6] For more information about HEM–4, go to *https://www.epa.gov/fera/risk-assessment-and-modeling-human-exposure-model-hem.*

[7] U.S. EPA. Revision to the *Guideline on Air Quality Models: Adoption of a Preferred General Purpose (Flat and Complex Terrain) Dispersion*

modeling and to develop the preliminary risk estimates, HEM–4 draws on three data libraries. The first is a library of meteorological data, which is used for dispersion calculations. This library includes 1 year (2016) of hourly surface and upper air observations from 840 meteorological stations. These stations may include multiple years other than meteorological data from 2016. These meteorological stations provide coverage of the United States and Puerto Rico. However, for this source category, the EPA utilized on-site meteorological data (2012–2013) from non-attainment modeling conducted by ADEQ. A second library of United States Census Bureau census block [8] internal point locations and populations provides the basis of human exposure calculations (U.S. Census, 2010). In addition, for each census block, the census library includes the elevation and controlling hill height, which are also used in dispersion calculations. A third library of pollutant-specific dose-response values is used to estimate health risk. These are discussed below.

b. Risk From Chronic Exposure to HAP

In developing the risk assessment for chronic exposures, the EPA uses the estimated annual average ambient air concentrations of each HAP emitted by each source in the source category. The HAP air concentrations at each nearby census block centroid located within 50 km of the facility are a surrogate for the chronic inhalation exposure concentration for all the people who reside in that census block. A distance of 50 km is consistent with both the analysis supporting the 1989 Benzene NESHAP (54 FR 38044) and the limitations of Gaussian dispersion models, including AERMOD.

For each facility, the Agency calculates the MIR as the cancer risk associated with a continuous lifetime (24 hours per day, 7 days per week, 52 weeks per year, 70 years) exposure to the maximum concentration at the centroid of each inhabited census block. The EPA calculates individual cancer risk by multiplying the estimated lifetime exposure to the ambient concentration of each HAP (in micrograms per cubic meter ($\mu g/m^3$)) by its unit risk estimate (URE). The URE is an upper-bound estimate of an individual's incremental risk of contracting cancer over a lifetime of exposure to a concentration of 1 microgram of the pollutant per cubic meter of air. For residual risk assessments, the EPA generally uses UREs from the EPA's Integrated Risk Information System (IRIS). For carcinogenic pollutants without IRIS values, the EPA looks to other reputable sources of cancer dose-response values, often using California EPA (CalEPA) UREs, where available. In cases where new, scientifically credible dose-response values have been developed in a manner consistent with the EPA's guidelines and have undergone a similar peer review process, the Agency may use such dose-response values in place of, or in addition to, other values, if appropriate. The pollutant-specific dose-response values used to estimate health risk are available at *https://www.epa.gov/fera/dose-response-assessment-assessing-health-risks-associated-exposure-hazardous-air-pollutants*.

Arsenic emissions from this source category are driving cancer risks. Inhalation cancer risks are based on an association between cumulative arsenic exposure and an increase in lung cancer mortality in two distinct smelter worker populations.[9]

Arsenic is also evaluated for multipathway risks as a PB–HAP based upon conservative food ingestions rates (*i.e.,* ingestion of fish and produce) and ingestion of contaminated soil.

To estimate individual lifetime cancer risks associated with exposure to HAP emissions from each facility in the source category, the Agency sums the risks for each of the carcinogenic HAP [10] emitted by the modeled facility. We estimate cancer risk at every census block within 50 km of every facility in the source category. The MIR is the highest individual lifetime cancer risk estimated for any of those census blocks. In addition to calculating the MIR, we estimate the distribution of individual cancer risks for the source category by summing the number of individuals within 50 km of the sources whose estimated risk falls within a specified risk range. We also estimate annual cancer incidence by multiplying the estimated lifetime cancer risk at each census block by the number of people residing in that block, summing results for all of the census blocks, and then dividing this result by a 70-year lifetime.

To assess the risk of noncancer health effects from chronic exposure to HAP, we calculate either an HQ or a target organ-specific hazard index (TOSHI). We calculate an HQ when a single noncancer HAP is emitted. Where more than one noncancer HAP is emitted, we sum the HQ for each of the HAP that affects a common target organ or target organ system to obtain a TOSHI. The HQ is the estimated exposure divided by the chronic noncancer dose-response value, which is a value selected from one of several sources. The preferred chronic noncancer dose-response value is the EPA RfC, defined as ''an estimate (with uncertainty spanning perhaps an order of magnitude) of a continuous inhalation exposure to the human population (including sensitive subgroups) that is likely to be without an appreciable risk of deleterious effects during a lifetime'' (*https://iaspub.epa.gov/sor_internet/registry/termreg/searchandretrieve/glossariesandkeywordlists/search.do?details=&vocabName=IRIS%20Glossary*). In cases where an RfC from the EPA's IRIS is not available or where the EPA determines that using a value other than the RfC is appropriate, sometimes the EPA uses such an alternative value to assess risks. An example of such an alternative value is the use of the primary NAAQS for lead. The lead NAAQS is based upon a maximum 3-month average ambient concentration of 0.15 ug/m3. Additional chronic noncancer dose-response values can be a value from the following prioritized sources, which define their dose-response values similarly to the EPA: (1) The Agency for Toxic Substances and Disease Registry (ATSDR) Minimum Risk Level (*https://www.atsdr.cdc.gov/mrls/index.asp*); (2) the CalEPA Chronic Reference Exposure Level (*https://oehha.ca.gov/air/crnr/notice-adoption-air-toxics-hot-spots-program-guidance-manual-preparation-*

Model and Other Revisions (70 FR 68218, November 9, 2005).

[8] A census block is the smallest geographic area for which census statistics are tabulated.

[9] US EPA IRIS; *Chemical Assessment Summary for Arsenic (inorganic) https://cfpub.epa.gov/ncea/iris/iris_documents/documents/subst/0278_summary.pdf#nameddest=cancerinhal.*

[10] The EPA's 2005 *Guidelines for Carcinogen Risk Assessment* classifies carcinogens as: ''carcinogenic to humans,'' ''likely to be carcinogenic to humans,'' and ''suggestive evidence of carcinogenic potential.'' These classifications also coincide with the terms ''known carcinogen, probable carcinogen, and possible carcinogen,'' respectively, which are the terms advocated in the EPA's *Guidelines for Carcinogen Risk Assessment,* published in 1986 (51 FR 33992, September 24, 1986). In August 2000, the document, *Supplemental Guidance for Conducting Health Risk Assessment of Chemical Mixtures* (EPA/630/R–00/002), was published as a supplement to the 1986 document. Copies of both documents can be obtained from *https://cfpub.epa.gov/ncea/risk/recordisplay.cfm?deid=20533&CFID=70315376&CFTOKEN=71597944.* Summing the risk of these individual compounds to obtain the cumulative cancer risk is an approach that was recommended by the EPA's SAB in their 2002 peer review of the EPA's National Air Toxics Assessment (NATA) titled *NATA—Evaluating the National-scale Air Toxics Assessment 1996 Data—an SAB Advisory,* available at *https://yosemite.epa.gov/sab/sabproduct.nsf/214C6E915BB04E14852570CA007A682C/$File/ecadv02001.pdf.*

health-risk-0); or (3) as noted above, a scientifically credible dose-response value that has been developed in a manner consistent with the EPA guidelines and has undergone a peer review process similar to that used by the EPA. The pollutant-specific dose-response values used to estimate health risks are available at *https://www.epa.gov/fera/dose-response-assessment-assessing-health-risks-associated-exposure-hazardous-air-pollutants*.

This assessment identified emissions of arsenic and lead as a chronic noncancer hazard concern for children. Both pollutants impact brain development. The chronic, noncancer health effect benchmark for arsenic exposure is based on a decrease in intellectual function and adverse effects on neurobehavioral development in 10-yr-old children exposed through drinking water from birth.[11]

For lead, the NAAQS of 0.15 μg/m^3 specifies a level of air quality that protects the most sensitive subpopulation, children, from adverse effects, such as IQ loss, with an adequate margin of safety following exposure through inhalation or ingestion of lead previously emitted into the air.[12] Several studies were used as the basis for the standard, including an international pooled analysis of seven prospective cohort studies (n = 1,333).[13]

A review of the health effect benchmarks for arsenic and lead determined that, although the target organ is the same for these two pollutants, a TOSHI should not be calculated based upon the difference in exposure duration for the two benchmarks. The chronic REL for arsenic is an airborne concentration of inorganic arsenic at or below which no adverse noncancer health effects are anticipated in individuals indefinitely exposed to that concentration, while the lead standard is applied to a maximum 3-month rolling average of monitored lead concentrations.

c. Risk From Acute Exposure to HAP That May Cause Health Effects Other Than Cancer

For each HAP for which appropriate acute inhalation dose-response values are available, the EPA also assesses the potential health risks due to acute exposure. For these assessments, the EPA makes conservative assumptions about emission rates, meteorology, and exposure location. As part of our efforts to continually improve our methodologies to evaluate the risks that HAP emitted from categories of industrial sources pose to human health and the environment,[14] the EPA revised our treatment of meteorological data to use reasonable worst-case air dispersion conditions in our acute risk screening assessments instead of worst-case air dispersion conditions. This revised treatment of meteorological data and the supporting rationale are described in more detail in *Residual Risk Assessment for Primary Copper Smelting Major Source Category in Support of the 2021 Risk and Technology Review Proposed Rule* and in Appendix 5 of the report: *Technical Support Document for Acute Risk Screening Assessment.* This revised approach has been used in this proposed rule and in all other RTR rulemakings proposed on or after June 3, 2019.

To assess the potential acute risk to the maximally exposed individual, we use the peak hourly emission rate for each emission point,[15] reasonable worst-case air dispersion conditions (*i.e.,* 99th percentile), and the point of highest off-site exposure. Specifically, we assume that peak emissions from the source category and reasonable worst-case air dispersion conditions co-occur and that a person is present at the point of maximum exposure.

To characterize the potential health risks associated with estimated acute inhalation exposures to a HAP, we generally use multiple acute dose-response values, including acute RELs, acute exposure guideline levels (AEGLs), and emergency response planning guidelines (ERPG) for 1-hour exposure durations, if available, to calculate acute HQs. The acute HQ is calculated by dividing the estimated acute exposure concentration by the acute dose-response value. For each HAP for which acute dose-response values are available, the EPA calculates acute HQs. For this source category, acute risks from arsenic were a concern based upon the 1-hour REL of 0.2 μg/m^3. The acute REL is based on developmental effects in mice (decreased fetal weight, growth retardation, skeletal defects).[16]

An acute REL is defined as ''the concentration level at or below which no adverse health effects are anticipated for a specified exposure duration.''[17] Acute RELs are based on the most sensitive, relevant, adverse health effect reported in the peer-reviewed medical and toxicological literature. They are designed to protect the most sensitive individuals in the population through the inclusion of margins of safety. Because margins of safety are incorporated to address data gaps and uncertainties, exceeding the REL does not automatically indicate an adverse health impact. AEGLs represent threshold exposure limits for the general public and are applicable to emergency exposures ranging from 10 minutes to 8 hours.[18] They are guideline levels for ''once-in-a-lifetime, short-term exposures to airborne concentrations of acutely toxic, high-priority chemicals.'' *Id.* at 21. The AEGL–1 is specifically defined as ''the airborne concentration (expressed as ppm (parts per million) or mg/m^3 (milligrams per cubic meter)) of a substance above which it is predicted that the general population, including susceptible individuals, could experience notable discomfort, irritation, or certain asymptomatic nonsensory effects. However, the effects are not disabling and are transient and reversible upon cessation of exposure.'' *Id.* at 3. The document also notes that ''Airborne concentrations below AEGL–1 represent exposure levels that can produce mild and progressively increasing but transient and nondisabling odor, taste, and sensory irritation or certain asymptomatic, nonsensory effects.'' *Id.* AEGL–2 are defined as ''the airborne concentration (expressed as parts per million or

[11] Wasserman et al. (2004) and Tsai et al. (2003).

[12] *EPA Final Rule (National Ambient Air Quality Standards for Lead;* November 12, 2008); *https://www.govinfo.gov/content/pkg/FR-2008-11-12/pdf/E8-25654.pdf.*

[13] Lanphear et al. (2005).

[14] See, *e.g.,* U.S. EPA. *Screening Methodologies to Support Risk and Technology Reviews (RTR): A Case Study Analysis* (Draft Report, May 2017. *https://www.epa.gov/stationary-sources-air-pollution/risk-and-technology-review-national-emissions-standards-hazardous*).

[15] In the absence of hourly emission data, the EPA develops estimates of maximum hourly emission rates by multiplying the average actual annual emissions rates by a factor (either a category-specific factor or a default factor of 10) to account for variability. This is documented in *Residual Risk Assessment for Primary Copper Smelting Major Source Category in Support of the 2020 Risk and Technology Review Proposed Rule* and in Appendix 5 of the report: *Technical Support Document for Acute Risk Screening Assessment.* Both are available in the docket for this rulemaking.

[16] Nagymajtenyi et al. 1985.

[17] CalEPA issues acute RELs as part of its Air Toxics Hot Spots Program, and the 1-hour and 8-hour values are documented in *Air Toxics Hot Spots Program Risk Assessment Guidelines, Part I, The Determination of Acute Reference Exposure Levels for Airborne Toxicants,* which is available at *https://oehha.ca.gov/air/general-info/oehha-acute-8-hour-and-chronic-reference-exposure-level-rel-summary.*

[18] National Academy of Sciences, 2001. *Standing Operating Procedures for Developing Acute Exposure Levels for Hazardous Chemicals,* page 2. Available at *https://www.epa.gov/sites/production/files/2015-09/documents/sop_final_standing_operating_procedures_2001.pdf.* Note that the National Advisory Committee for Acute Exposure Guideline Levels for Hazardous Substances ended in October 2011, but the AEGL program continues to operate at the EPA and works with the National Academies to publish final AEGLs (*https://www.epa.gov/aegl*).

milligrams per cubic meter) of a substance above which it is predicted that the general population, including susceptible individuals, could experience irreversible or other serious, long-lasting adverse health effects or an impaired ability to escape.'' *Id.*

ERPGs are ''developed for emergency planning and are intended as health-based guideline concentrations for single exposures to chemicals.'' [19] *Id.* at 1. The ERPG–1 is defined as ''the maximum airborne concentration below which it is believed that nearly all individuals could be exposed for up to 1 hour without experiencing other than mild transient adverse health effects or without perceiving a clearly defined, objectionable odor.'' *Id.* at 2. Similarly, the ERPG–2 is defined as ''the maximum airborne concentration below which it is believed that nearly all individuals could be exposed for up to one hour without experiencing or developing irreversible or other serious health effects or symptoms which could impair an individual's ability to take protective action.'' *Id.* at 1.

An acute REL for 1-hour exposure durations is typically lower than its corresponding AEGL–1 and ERPG–1. Even though their definitions are slightly different, AEGL–1s are often the same as the corresponding ERPG–1s, and AEGL–2s are often equal to ERPG–2s. The maximum HQs from our acute inhalation screening risk assessment typically result when we use the acute REL for a HAP. In cases where the maximum acute HQ exceeds 1, we also report the HQ based on the next highest acute dose-response value (usually the AEGL–1 and/or the ERPG–1).

For this source category, we developed source category-specific acute factors ranging from 3 to 10 to estimate peak hourly emissions from annual emissions estimates for the input to the acute risk assessment modeling analysis. In general, hourly emissions estimates were based on batch cycle times for smelting and anode furnaces with an emission hourly multiplier of 3 applied while road fugitive emissions were modeled with a default hourly multiplier of 10 times the annual average. A further discussion of these factors and why they were chosen can be found in the memorandum, *Emissions Data Used for Primary Copper Smelting Risk and Technology Review (RTR) Modeling Files,* available in the docket for this rulemaking.

In our acute inhalation screening risk assessment, acute impacts are deemed negligible for HAP for which acute HQs are less than or equal to 1, and no further analysis is performed for these HAP. In cases where an acute HQ from the screening step is greater than 1, we assess the site-specific data to ensure that the acute HQ is at an off-site location. For this source category, the data refinements employed consisted of overlaying satellite imagery with off-site polar receptors to estimate off-site acute impacts. These refinements are discussed more fully in the *Residual Risk Assessment for the Primary Copper Smelting Major Source Category in Support of the 2021 Risk and Technology Review Proposed Rule,* which is available in the docket for this source category.

4. How do we conduct the multipathway exposure and risk screening assessment?

The EPA conducts a tiered screening assessment examining the potential for significant human health risks due to exposures via routes other than inhalation (*i.e.,* ingestion). We first determine whether any sources in the source category emit any HAP known to be persistent and bioaccumulative in the environment, as identified in the EPA's Air Toxics Risk Assessment Library (see Volume 1, Appendix D, at *https://www.epa.gov/fera/risk-assessment-and-modeling-air-toxics-risk-assessment-reference-library*).

For the Primary Copper Smelting source category, we identified PB–HAP emissions of lead, arsenic, mercury and cadmium, so we proceeded to the next step of the evaluation. Except for lead, the human health risk screening assessment for PB–HAP consists of three progressive tiers. In a Tier 1 screening assessment, we determine whether the magnitude of the facility-specific emissions of PB–HAP warrants further evaluation to characterize human health risk through upper-end ingestion rates of (meat, produce, fruits, fish, etc.) based upon a combined farmer and fisher scenario. To facilitate this step, we evaluate emissions against previously developed screening threshold emission rates for several PB–HAP that are based on a hypothetical upper-end screening exposure scenario developed for use in conjunction with the EPA's Total Risk Integrated Methodology.Fate, Transport, and Ecological Exposure (TRIM.FaTE) model. The PB–HAP with screening threshold emission rates are arsenic compounds, cadmium compounds, chlorinated dibenzodioxins and furans, mercury compounds, and polycyclic organic matter (POM). Based on the EPA estimates of toxicity and bioaccumulation potential, these pollutants represent a conservative list for inclusion in multipathway risk assessments for RTR rules. (For more details see the risk assessment report cited above and Volume 1, Appendix D at *https://www.epa.gov/sites/production/files/2013-08/documents/volume_1_reflibrary.pdf.*). In this assessment, we compare the facility-specific emission rates of these PB–HAP to the screening threshold emission rates for each PB–HAP to assess the potential for significant human health risks via the ingestion pathway. We call this application of the TRIM.FaTE model the Tier 1 screening assessment. The ratio of a facility's actual emission rate to the Tier 1 screening threshold emission rate is a screening value (SV).

We derive the Tier 1 screening threshold emission rates for these PB–HAP (other than lead compounds) to correspond to a maximum excess lifetime cancer risk of 1-in-1 million (*i.e.,* for arsenic compounds, polychlorinated dibenzodioxins and furans, and POM) or, for HAP that cause noncancer health effects (*i.e.,* cadmium compounds and mercury compounds), a maximum HQ of 1. If the emission rate of any one PB–HAP or combination of carcinogenic PB–HAP in the Tier 1 screening assessment exceeds the Tier 1 screening threshold emission rate for any facility (*i.e.,* the SV is greater than 1), we conduct a second screening assessment, which we call the Tier 2 screening assessment. The Tier 2 screening assessment separates the Tier 1 combined fisher and farmer exposure scenario into fisher, farmer, and gardener scenarios that retain upper-bound ingestion rates.

In the Tier 2 screening assessment, the location of each facility that exceeds a Tier 1 screening threshold emission rate is used to refine the assumptions associated with the Tier 1 fisher and farmer exposure scenarios at that facility. A key assumption in the Tier 1 screening assessment is that a lake and/or farm is located near the facility. As part of the Tier 2 screening assessment, we use a U.S. Geological Survey (USGS) database to identify actual waterbodies within 50 km of each facility and assume the fisher only consumes fish from lakes within that 50 km zone. We also examine the differences between local meteorology near the facility and the meteorology used in the Tier 1 screening assessment. We then adjust the previously developed Tier 1

[19] *ERPGS Procedures and Responsibilities.* March 2014. American Industrial Hygiene Association. Available at: *https://www.aiha.org/get-involved/AIHAGuidelineFoundation/EmergencyResponsePlanningGuidelines/Documents/ERPG%20Committee%20Standard%20Operating%20Procedures%20%20-%20March%202014%20Revision%20%28Updated%2010-2-2014%29.pdf.*

screening threshold emission rates for each PB–HAP for each facility based on an understanding of how exposure concentrations estimated for the screening scenario change with the use of local meteorology and the USGS lakes database.

In the Tier 2 farmer scenario, we maintain an assumption that the farm is located within 0.5 km of the facility and that the farmer consumes meat, eggs, dairy, vegetables, and fruit produced near the facility. We may further refine the Tier 2 screening analysis by assessing a gardener scenario to characterize a range of exposures, with the gardener scenario being more plausible in RTR evaluations. Under the gardener scenario, we assume the gardener consumes home-produced eggs, vegetables, and fruit products at the same ingestion rate as the farmer. The Tier 2 screen continues to rely on the high-end food intake assumptions that were applied in Tier 1 for local fish (adult female angler at 99th percentile fish consumption [20]) and locally grown or raised foods (90th percentile consumption of locally grown or raised foods for the farmer and gardener scenarios [21]). If PB–HAP emission rates do not result in a Tier 2 SV greater than 1, we consider those PB–HAP emissions to pose risks below a level of concern. If the PB–HAP emission rates for a facility exceed the Tier 2 screening threshold emission rates, we may conduct a Tier 3 screening assessment.

There are several analyses that can be included in a Tier 3 screening assessment, depending upon the extent of refinement warranted, including validating that the lakes are fishable, locating residential/garden locations for urban and/or rural settings, considering plume-rise to estimate emissions lost above the mixing layer, and considering hourly effects of meteorology and plume-rise on chemical fate and transport (a time-series analysis). If necessary, the EPA may further refine the screening assessment through a site-specific assessment.

In evaluating the potential multipathway risk from emissions of lead compounds, rather than developing a screening threshold emission rate, the Agency compares maximum estimated chronic inhalation exposure concentrations to the level of the current NAAQS for lead.[22] Values below the level of the primary (health-based) lead NAAQS are considered to have a low potential for multipathway risk. For this source category based upon high modeled annual concentrations of lead from HEM–4, a refined assessment was conducted to estimate the maximum 3-month average concentration for lead over multiple years. These refinements included the use of a post-processer (Lead-POST) in AERMOD to calculate the maximum 3-month lead concentration for each off-site receptor to directly compare to the current lead NAAQS standard.[23]

For further information on the multipathway assessment approach, see the *Residual Risk Assessment for the Primary Copper Smelting Major Source Category in Support of the Risk and Technology Review 2021 Proposed Rule,* which is available in the docket for this action.

5. How do we assess risks considering emissions control options?

In addition to assessing baseline inhalation risks and screening for potential multipathway risks, the EPA also estimates risks considering the potential emission reductions that would be achieved by the control options under consideration. In these cases, the expected emission reductions are applied to the specific HAP and emission points in the RTR emissions dataset to develop corresponding estimates of risk and incremental risk reductions.

6. How do we conduct the environmental risk screening assessment?

a. Adverse Environmental Effect, Environmental HAP, and Ecological Benchmarks

The EPA conducts a screening assessment to examine the potential for an adverse environmental effect as required under section 112(f)(2)(A) of the CAA. Section 112(a)(7) of the CAA defines ''adverse environmental effect'' as ''any significant and widespread adverse effect, which may reasonably be anticipated, to wildlife, aquatic life, or other natural resources, including adverse impacts on populations of endangered or threatened species or significant degradation of environmental quality over broad areas.''

The EPA focuses on eight HAP, which are referred to as ''environmental HAP,'' in its screening assessment: Six PB–HAP and two acid gases. The PB–HAP included in the screening assessment are arsenic compounds, cadmium compounds, dioxins/furans, POM, mercury (both inorganic mercury and methyl mercury), and lead compounds. The acid gases included in the screening assessment are hydrochloric acid (HCl) and hydrogen fluoride (HF).

HAP that persist and bioaccumulate are of particular environmental concern because they accumulate in the soil, sediment, and water. The acid gases, HCl and HF, are included due to their well-documented potential to cause direct damage to terrestrial plants. In the environmental risk screening assessment, the EPA evaluates the following four exposure media: terrestrial soils, surface water bodies (includes water-column and benthic sediments), fish consumed by wildlife, and air. Within these four exposure media, the Agency evaluates nine ecological assessment endpoints, which are defined by the ecological entity and its attributes. For PB–HAP (other than lead), both community-level and population-level endpoints are included. For acid gases, the ecological assessment endpoint evaluated is terrestrial plant communities.

An ecological benchmark represents a concentration of HAP that has been linked to a particular environmental effect level. For each environmental HAP, the Agency identified the available ecological benchmarks for each assessment endpoint and where possible, the ecological benchmarks at the following effect levels: probable effect levels, lowest-observed-adverse-effect level, and no-observed-adverse-effect level. In cases where multiple effect levels were available for a particular PB–HAP and assessment endpoint, the EPA uses all of the available effect levels to help us to determine whether ecological risks exist and, if so, whether the risks could be considered significant and widespread.

For further information on how the environmental risk screening

[20] Burger, J. 2002. *Daily consumption of wild fish and game: Exposures of high end recreationists. International Journal of Environmental Health Research,* 12:343–354.

[21] U.S. EPA. *Exposure Factors Handbook 2011 Edition (Final).* U.S. Environmental Protection Agency, Washington, DC, EPA/600/R–09/052F, 2011.

[22] In doing so, the EPA notes that the legal standard for a primary NAAQS—that a standard is requisite to protect public health and provide an adequate margin of safety (CAA section 109(b))—differs from the CAA section 112(f) standard (requiring, among other things, that the standard provide an ''ample margin of safety to protect public health''). However, the primary lead NAAQS is a reasonable measure of determining risk acceptability (*i.e.,* the first step of the Benzene NESHAP analysis) since it is designed to protect the most susceptible group in the human population—children, including children living near major lead emitting sources. 73 FR 67002/3; 73 FR 67000/3; 73 FR 67005/1. In addition, applying the level of the primary lead NAAQS at the risk acceptability step is conservative since that primary lead NAAQS reflects an adequate margin of safety.

[23] EPA Support Center for Regulatory Atmospheric Modeling site to access LEADPOST utilized in the Pb NAAQS program: *https://www.epa.gov/scram/air-quality-dispersion-modeling-preferred-and-recommended-models.*

assessment was conducted, including a discussion of the risk metrics used, how the environmental HAP were identified, and how the ecological benchmarks were selected, see Appendix 9 of the *Residual Risk Assessment for the Primary Copper Smelting Major Source Category in Support of the Risk and Technology Review 2021 Proposed Rule,* which is available in the docket for this action.

b. Environmental Risk Screening Methodology

For the environmental risk screening assessment, the EPA first determined whether any facilities in the Primary Copper Smelting source category emitted any of the environmental HAP. For the Primary Copper Smelting source category, the Agency identified emissions of arsenic, mercury, cadmium and lead. Because one or more of the environmental HAP evaluated are emitted by at least one facility in the source category, the Agency proceeded to the second step of the evaluation.

c. PB–HAP Methodology for Environmental Risk Screening

The environmental risk screening assessment includes six PB–HAP: Arsenic compounds, cadmium compounds, dioxins/furans, POM, mercury (both inorganic mercury and methyl mercury), and lead compounds. With the exception of lead, the environmental risk screening assessment for PB–HAP consists of three tiers. The first tier of the environmental risk screening assessment uses the same health-protective conceptual model that is used for the Tier 1 human health screening assessment. TRIM.FaTE model simulations were used to back-calculate Tier 1 screening threshold emission rates. The screening threshold emission rates represent the emission rate in tons of pollutant per year that results in media concentrations at the facility that equal the relevant ecological benchmark. To assess emissions from each facility in the category, the reported emission rate for each PB–HAP was compared to the Tier 1 screening threshold emission rate for that PB–HAP for each assessment endpoint and effect level. If emissions from a facility do not exceed the Tier 1 screening threshold emission rate, the facility ''passes'' the screening assessment, and, therefore, is not evaluated further under the screening approach. If emissions from a facility exceed the Tier 1 screening threshold emission rate, the EPA evaluates the facility further in Tier 2.

In Tier 2 of the environmental risk screening assessment, the screening threshold emission rates are adjusted to account for local meteorology and the actual location of lakes in the vicinity of facilities that did not pass the Tier 1 screening assessment. For soils, the EPA evaluates the average soil concentration for all soil parcels within a 7.5-km radius for each facility and PB–HAP. For the water, sediment, and fish tissue concentrations, the highest value for each facility for each pollutant is used. If emission concentrations from a facility do not exceed the Tier 2 screening threshold emission rate, the facility ''passes'' the screening assessment and typically is not evaluated further. If emissions from a facility exceed the Tier 2 screening threshold emission rate, the EPA evaluates the facility further in Tier 3.

As in the multipathway human health risk assessment, in Tier 3 of the environmental risk screening assessment, the Agency examines the suitability of the lakes around the facilities to support life and remove those that are not suitable (*e.g.,* lakes that have been filled in or are industrial ponds), adjust emissions for plume-rise, and conduct hour-by-hour time-series assessments. If these Tier 3 adjustments to the screening threshold emission rates still indicate the potential for an adverse environmental effect (*i.e.,* facility emission rate exceeds the screening threshold emission rate), the Agency may elect to conduct a more refined assessment using more site-specific information. If, after additional refinement, the facility emission rate still exceeds the screening threshold emission rate, the facility may have the potential to cause an adverse environmental effect.

To evaluate the potential for an adverse environmental effect from lead, we compared the average modeled air concentrations (from HEM–4) of lead around each facility in the source category to the level of the secondary NAAQS for lead. The secondary lead NAAQS is a reasonable means of evaluating environmental risk because it is set to provide substantial protection against adverse welfare effects which can include ''effects on soils, water, crops, vegetation, man-made materials, animals, wildlife, weather, visibility and climate, damage to and deterioration of property, and hazards to transportation, as well as effects on economic values and on personal comfort and well-being.''

d. Acid Gas Environmental Risk Methodology

The environmental risk screening assessment for acid gases evaluates the potential phytotoxicity and reduced productivity of plants due to chronic exposure to HF and HCl. The environmental risk screening methodology for acid gases is a single-tier screening assessment that compares modeled ambient air concentrations (from AERMOD) to the ecological benchmarks for each acid gas. To identify a potential adverse environmental effect (as defined in section 112(a)(7) of the CAA) from emissions of HF and HCl, the Agency evaluates the following metrics: the size of the modeled area around each facility that exceeds the ecological benchmark for each acid gas, in acres and square kilometers; the percentage of the modeled area around each facility that exceeds the ecological benchmark for each acid gas; and the area-weighted average SV around each facility (calculated by dividing the area-weighted average concentration over the 50-km modeling domain by the ecological benchmark for each acid gas). For further information on the environmental screening assessment approach, see Appendix 9 of the *Residual Risk Assessment for the Primary Copper Smelting Major Source Category in Support of the Risk and Technology Review 20201 Proposed Rule,* which is available in the docket for this action.

7. How do we conduct facility-wide assessments?

To put the source category risks in context, the EPA typically examines the risks from the entire ''facility,'' where the facility includes all HAP-emitting operations within a contiguous area and under common control. In other words, the Agency examines the HAP emissions not only from the source category emission points of interest, but also emissions of HAP from all other emission sources at the facility for which we have data. For this source category, we conducted the facility-wide assessment using a dataset compiled from the 2017 NEI and 2018 actual emissions provided by ADEQ. The source category records of that 2017 and 2018 actual emissions dataset were removed, evaluated, and updated as described in section II.C of this preamble: What data collection activities were conducted to support this action? Once a quality assured source category dataset was available, it was placed back with the remaining records from the NEI for that facility. The facility-wide file was then used to analyze risks due to the inhalation of HAP that are emitted ''facility-wide'' for the populations residing within 50 km of each facility, consistent with the methods used for the source category analysis described above. For these

facility-wide risk analyses, the modeled source category risks were compared to the facility-wide risks to determine the portion of the facility-wide risks that could be attributed to the source category addressed in this proposal. The EPA also specifically examined the facility that was associated with the highest estimate of risk and determined the percentage of that risk attributable to the source category of interest. The *Residual Risk Assessment for the Primary Copper Smelting Major Source Category in Support of the Risk and Technology Review 20201 Proposed Rule,* available through the docket for this action, provides the methodology and results of the facility-wide analyses, including all facility-wide risks and the percentage of source category contribution to facility-wide risks.

8. How do we consider uncertainties in risk assessment?

Uncertainty and the potential for bias are inherent in all risk assessments, including those performed for this proposal. Although uncertainty exists, we believe that our approach, which used conservative tools and assumptions, ensures that our decisions are health and environmentally protective. A brief discussion of the uncertainties in the RTR emissions dataset, dispersion modeling, inhalation exposure estimates, and dose-response relationships follows below. Also included are those uncertainties specific to our acute screening assessments, multipathway screening assessments, and our environmental risk screening assessments. A more thorough discussion of these uncertainties is included in the *Residual Risk Assessment for the Primary Copper Smelting Major Source Category in Support of the Risk and Technology Review 2021 Proposed Rule,* which is available in the docket for this action. If a multipathway site-specific assessment was performed for this source category, a full discussion of the uncertainties associated with that assessment can be found in Appendix 11 of that document, *Site-Specific Human Health Multipathway Residual Risk Assessment Report*.

a. Uncertainties in the RTR Emissions Dataset

Although the development of the RTR emissions dataset involved quality assurance/quality control processes, the accuracy of emissions values will vary depending on the source of the data, the degree to which data are incomplete or missing, the degree to which assumptions made to complete the datasets are accurate, errors in emission estimates, and other factors. The emission estimates considered in this analysis generally are annual totals for certain years, and they generally do not reflect short-term fluctuations during the course of a year or variations from year to year except in potentially a few cases, such as the May/June 2018 lead test data for anode refining roof vent fugitive emissions from the Freeport facility. Nevertheless, the estimates of peak hourly emission rates for the acute effects screening assessment were based on emission adjustment factors applied to the average annual hourly emission rates, which are intended to account for emission fluctuations due to normal facility operations.

b. Uncertainties in Dispersion Modeling

The EPA recognizes there is uncertainty in ambient concentration estimates associated with any model, including the EPA's recommended regulatory dispersion model, AERMOD. In using a model to estimate ambient pollutant concentrations, the user chooses certain options to apply. For RTR assessments, we select some model options that have the potential to overestimate ambient air concentrations (*e.g.,* not including plume depletion or pollutant transformation). We select other model options that have the potential to underestimate ambient impacts (*e.g.,* not including building downwash). Other options that we select have the potential to either under- or overestimate ambient levels (*e.g.,* location and year of meteorology data and receptor locations). On balance, considering the directional nature of the uncertainties commonly present in ambient concentrations estimated by dispersion models, the approach we apply in the RTR assessments should yield unbiased estimates of ambient HAP concentrations. The uncertainties attributed to dispersion modeling in RTR assessments were assessed by EPA's Science Advisory Board (SAB) and deemed suitable and appropriate.[24] We also note that the selection of meteorology dataset location could have an impact on the risk estimates. For this source category, the two facilities being modeled have ambient air toxics monitors and on-site meteorological stations in place that can be used to help characterize the uncertainty of the emissions modeling. For the Freeport facility, we were unable to collect on-site meteorological data for the 2019 monitor to model comparison; therefore, the model to monitor evaluation was based upon on-site 2011–2012 meteorological data with the 2019 monitoring data. This was not an uncertainty for the Asarco facility, since both model and monitoring comparisons were for 2019. A review of the model to monitor comparisons between the two site(s) can be found in Appendix 1 of the *Residual Risk Assessment for the Primary Copper Smelting Source Category in Support of the Risk and Technology Review 2021 Proposed Rule,* report which is available in the docket for this action and Section IV; B–6 of this proposal. As we continue to update and expand our library of meteorological station data used in our risk assessments, we expect to reduce this variability.

c. Uncertainties in Inhalation Exposure Assessment

Although every effort is made to identify all of the relevant facilities and emission points, as well as to develop accurate estimates of the annual emission rates for all relevant HAP, the uncertainties in our emission inventory likely dominate the uncertainties in the exposure assessment. Some uncertainties in our exposure assessment include human mobility, using the centroid of each census block, assuming lifetime exposure, and assuming only outdoor exposures. For most of these factors, there is neither an under nor overestimate when looking at the maximum individual risk or the incidence, but the shape of the distribution of risks may be affected. With respect to outdoor exposures, actual exposures may not be as high if people spend time indoors, especially for very reactive pollutants or larger particles. For all factors, we reduce uncertainty when possible. For example, with respect to census-block centroids, we analyze large blocks using aerial imagery and adjust locations of the block centroids to better represent the population in the blocks. We also add additional receptor locations where the population of a block is not well represented by a single location.

d. Uncertainties in Dose-Response Relationships

There are uncertainties inherent in the development of the dose-response values used in our risk assessments for cancer effects from chronic exposures and noncancer effects from both chronic and acute exposures. Some uncertainties are generally expressed quantitatively, and others are generally

[24] USEPA, 2009a. *Risk and Technology Review (RTR) Risk Assessment Methodologies: For Review by the EPA's Science Advisory Board with Case Studies—MACT I Petroleum Refining Sources and Portland Cement Manufacturing.* EPA–452/R–09–006. *https://yosemite.epa.gov/sab/sabproduct.nsf/4AB3966E263D943A8525771F00668381/$File/EPA-SAB-10-007-unsigned.pdf.*

expressed in qualitative terms. We note, as a preface to this discussion, a point on dose-response uncertainty that is stated in the EPA's *2005 Guidelines for Carcinogen Risk Assessment*; namely, that ''the primary goal of EPA actions is protection of human health; accordingly, as an Agency policy, risk assessment procedures, including default options that are used in the absence of scientific data to the contrary, should be health protective'' (the EPA's *2005 Guidelines for Carcinogen Risk Assessment,* page 1–7). This is the approach followed here as summarized in the next paragraphs.

Cancer UREs used in our risk assessments are those that have been developed to generally provide an upper bound estimate of risk.[25] That is, they represent a ''plausible upper limit to the true value of a quantity'' (although this is usually not a true statistical confidence limit). In some circumstances, the true risk could be as low as zero; however, in other circumstances the risk could be greater.[26] Chronic noncancer RfC and reference dose values represent chronic exposure levels that are intended to be health-protective levels. To derive dose-response values that are intended to be ''without appreciable risk,'' the methodology relies upon an uncertainty factor (UF) approach,[27] which considers uncertainty, variability, and gaps in the available data. The UFs are applied to derive dose-response values that are intended to protect against appreciable risk of deleterious effects.

Many of the UFs used to account for variability and uncertainty in the development of acute dose-response values are quite similar to those developed for chronic durations. Additional adjustments are often applied to account for uncertainty in extrapolation from observations at one exposure duration (*e.g.,* 4 hours) to derive an acute dose-response value at another exposure duration (*e.g.,* 1 hour). Not all acute dose-response values are developed for the same purpose, and care must be taken when interpreting the results of an acute assessment of human health effects relative to the dose-response value or values being exceeded. Where relevant to the estimated exposures, the lack of acute dose-response values at different levels of severity should be factored into the risk characterization as potential uncertainties.

Uncertainty also exists in the selection of ecological benchmarks for the environmental risk screening assessment. The EPA established a hierarchy of preferred benchmark sources to allow selection of benchmarks for each environmental HAP at each ecological assessment endpoint. We searched for benchmarks for three effect levels (*i.e.,* no-effects level, threshold-effect level, and probable effect level), but not all combinations of ecological assessment/environmental HAP had benchmarks for all three effect levels. Where multiple effect levels were available for a particular HAP and assessment endpoint, we used all of the available effect levels to help us determine whether risk exists and whether the risk could be considered significant and widespread.

For a group of compounds that are unspeciated (*e.g.,* glycol ethers), we conservatively use the most protective dose-response value of an individual compound in that group to estimate risk. Similarly, for an individual compound in a group (*e.g.,* ethylene glycol diethyl ether) that does not have a specified dose-response value, we also apply the most protective dose-response value from the other compounds in the group to estimate risk.

e. Uncertainties in Acute Inhalation Screening Assessments

In addition to the uncertainties highlighted above, there are several factors specific to the acute exposure assessment that the EPA conducts as part of the risk review under section 112 of the CAA. The accuracy of an acute inhalation exposure assessment depends on the simultaneous occurrence of independent factors that may vary greatly, such as hourly emissions rates, meteorology, and the presence of a person. In the acute screening assessment that we conduct under the RTR program, we assume that peak emissions from the source category and reasonable worst-case air dispersion conditions (*i.e.,* 99th percentile) co-occur. We then include the additional assumption that a person is located at this point at the same time. Together, these assumptions represent a reasonable worst-case actual exposure scenario. In most cases, it is unlikely that a person would be located at the point of maximum exposure during the time when peak emissions and reasonable worst-case air dispersion conditions occur simultaneously.

f. Uncertainties in the Multipathway and Environmental Risk Screening Assessments

For each source category, the Agency generally relies on site-specific levels of PB–HAP or environmental HAP emissions to determine whether a refined assessment of the impacts from multipathway exposures is necessary or whether it is necessary to perform an environmental screening assessment. This determination is based on the results of a three-tiered screening assessment that relies on the outputs from models—TRIM.FaTE and AERMOD—that estimate environmental pollutant concentrations and human exposures for five PB–HAP (dioxins, POM, mercury, cadmium, and arsenic) and two acid gases (HF and HCl). For lead, the Agency uses AERMOD to determine ambient air concentrations, which are then compared to the secondary NAAQS standard for lead. Two important types of uncertainty associated with the use of these models in RTR risk assessments and inherent to any assessment that relies on environmental modeling are model uncertainty and input uncertainty.[28]

Model uncertainty concerns whether the model adequately represents the actual processes (*e.g.,* movement and accumulation) that might occur in the environment. For example, does the model adequately describe the movement of a pollutant through the soil? This type of uncertainty is difficult to quantify. However, based on feedback received from previous EPA SAB reviews and other reviews, we are confident that the models used in the screening assessments are appropriate and state-of-the-art for the multipathway and environmental screening risk assessments conducted in support of RTRs. For example, the SAB found that the general methodology of the tiered screening approach and the use of TRIM.FaTE and AERMOD are appropriate for both multipathway and ecological screening tools. The SAB noted the simplicity of the air dispersion treatment in TRIM.FaTE and encouraged the advancement of

[25] IRIS glossary (*https://ofmpub.epa.gov/sor_internet/registry/termreg/searchandretrieve/glossariesandkeywordlists/search.do?details=&glossaryName=IRIS%20Glossary*).

[26] An exception to this is the URE for benzene, which is considered to cover a range of values, each end of which is considered to be equally plausible, and which is based on maximum likelihood estimates.

[27] See *A Review of the Reference Dose and Reference Concentration Processes,* U.S. EPA, December 2002, and *Methods for Derivation of Inhalation Reference Concentrations and Application of Inhalation Dosimetry,* U.S. EPA, 1994.

[28] In the context of this discussion, the term ''uncertainty'' as it pertains to exposure and risk encompasses both *variability* in the range of expected inputs and screening results due to existing spatial, temporal, and other factors, as well as *uncertainty* in being able to accurately estimate the true result.

incorporating AERMOD analysis within the TRIM.FaTE framework.[29]

Input uncertainty is concerned with how accurately the models have been configured and parameterized for the assessment at hand. For Tier 1 of the multipathway and environmental screening assessments, the EPA configured the models to avoid underestimating exposure and risk. This was accomplished by selecting upper-end values from nationally representative datasets for the more influential parameters in the environmental model, including selection and spatial configuration of the area of interest, lake location and size, meteorology, surface water, soil characteristics, and structure of the aquatic food web. The EPA also assumes an ingestion exposure scenario and values for human exposure factors that represent reasonable maximum exposures.

In Tier 2 of the multipathway and environmental screening assessments, we refine the model inputs to account for meteorological patterns in the vicinity of the facility versus using upper-end national values, and we identify the actual location of lakes near the facility rather than the default lake location that we apply in Tier 1. By refining the screening approach in Tier 2 to account for local geographical and meteorological data, we decrease the likelihood that concentrations in environmental media are overestimated, thereby increasing the usefulness of the screening assessment. In Tier 3 of the screening assessments, we refine the model inputs again to account for hour-by-hour plume-rise and the height of the mixing layer. The EPA can also use those hour-by-hour meteorological data in a TRIM.FaTE run using the screening configuration corresponding to the lake location. These refinements produce a more accurate estimate of chemical concentrations in the media of interest, thereby reducing the uncertainty with those estimates. The assumptions and the associated uncertainties regarding the selected ingestion exposure scenario are the same for all three tiers.

For the environmental screening assessment for acid gases, we employ a single-tiered approach. We use the modeled air concentrations and compare those with ecological benchmarks.

For all tiers of the multipathway and environmental screening assessments, our approach to addressing model input uncertainty is generally cautious. We choose model inputs from the upper end of the range of possible values for the influential parameters used in the models, and we assume that the exposed individual exhibits ingestion behavior that would lead to a high total exposure. This approach reduces the likelihood of not identifying high risks for adverse impacts.

Despite the uncertainties, when individual pollutants or facilities do not exceed screening threshold emission rates (*i.e.,* screen out), we are confident that the potential for adverse multipathway impacts on human health is very low. On the other hand, when individual pollutants or facilities do exceed screening threshold emission rates, it does not mean that impacts are significant, only that the Agency cannot rule out that possibility and that a refined assessment for the site might be necessary to obtain a more accurate risk characterization for the source category.

The EPA evaluates the following HAP in the multipathway and/or environmental risk screening assessments, where applicable: Arsenic, cadmium, dioxins/furans, lead, mercury (both inorganic and methyl mercury), POM, HCl, and HF. These HAP represent pollutants that can cause adverse impacts either through direct exposure to HAP in the air or through exposure to HAP that are deposited from the air onto soils and surface waters and then through the environment into the food web. These HAP represent those HAP for which the Agency can conduct a meaningful multipathway or environmental screening risk assessment. For other HAP not included in our screening assessments, the model has not been parameterized such that it can be used for that purpose. In some cases, depending on the HAP, the Agency may not have appropriate multipathway models that allow us to predict the concentration of that pollutant. The EPA acknowledges that other HAP beyond these that we are evaluating may have the potential to cause adverse effects and, therefore, the EPA may evaluate other relevant HAP in the future, as modeling science and resources allow.

IV. Analytical Results and Proposed Decisions

A. What actions are we taking pursuant to CAA sections 112(d)(2) and 112(d)(3)?

In this proposal, the EPA is proposing the following standards pursuant to CAA section 112(d)(2) and (3) for the major source NESHAP (40 CFR part 63, subpart QQQ):

- PM limits for anode refining point sources at existing and new sources.
- PM limits for process fugitive emissions from rooflines of smelting furnaces at existing and new sources.
- PM limits for process fugitive emissions from converters at existing and new sources.
- PM limits for process fugitive emissions from roof vents at anode refining operations at existing and new sources.
- Mercury limits for any existing and new combination of stacks or other vents from the copper concentrate dryers, converting department, the anode refining department, and the smelting vessels affected sources.
- PM limits for new converters.

The results and proposed decisions based on the analyses performed pursuant to CAA section 112(d)(2) and (3) are presented below. When addressing previously unregulated HAP emission sources or unregulated HAP from previously regulated sources in the proposed rule, we apply the MACT methodology, as described in section II.A above.

1. Anode Refining Point Source Emissions

The 1998 proposal for primary copper smelting identified anode refining in the definition of primary copper smelters. However, at that time, the EPA said there were insufficient data to set an emission limit for anode refining. Therefore, the Agency did not propose specific emission standards for anode copper refining operations in the major source NESHAP at that time. In contrast, the 2007 area source NESHAP for primary copper smelting (subpart EEEEEE) does include emissions standards for anode refining. We conclude that anode refining is part of the source category and emits HAP emissions. Therefore, pursuant to CAA section 112(d)(2) and (3), the Agency is proposing to revise the 2002 major source NESHAP to include emission limits for new and existing anode refining point sources. We have anode refining point source test data from only one source, and because there are less than 30 sources in the category, the MACT floor is based on the average performance of the best 5 sources (in this case, the upper predictive limit (UPL) for the best single source because the Agency only has test data from one source). Using available test data, we are proposing a MACT floor PM limit as a surrogate for particulate metal HAP, which includes, but is not limited to,

[29] USEPA, 2018. Review of EPA's draft technical report entitle Screening Methodologies to Support Risk and Technology Review (RTR): A Case Study Analysis; EPA–SAB–18–004. *https://yosemite.epa.gov/sab/sabproduct.nsf/LookupWebReportsLastMonthBOARD/7A84AADF3F2FE04A85258307005F7D70/$File/EPA-SAB-18-004+.pdf.*

antimony, arsenic, beryllium, cadmium, chromium, cobalt, lead, manganese, nickel, and selenium compounds. This approach is consistent with the approach used to limit metal HAP emissions from the other copper smelting processes. A detailed analysis and documentation of the MACT floor calculations can be found in the technical document, *Draft MACT Floor Analyses for the Primary Copper Smelting Source Category.* The MACT floor emissions limit was calculated based on the average of the emissions tests, accounting for variability using the 99 percent UPL. The MACT floor limit for the anode refining point source emissions for existing and new sources is 5.8 milligrams per dry standard cubic meter (mg/dscm).

We identified one BTF option to further reduce PM emissions from anode refining furnaces point sources. The BTF option would require the two facilities to each install and operate a wet electrostatic precipitator (ESP) in addition to their existing controls (baghouses). We estimated that emissions of lead would be reduced by about 0.8 tpy and arsenic emissions would be reduced by about 0.3 tpy. For the 2 existing facilities to comply with this BTF standard, we estimated capital costs of $72 million and annualized costs of $9.6 million for a cost effectiveness of $8.7 million per ton of HAP metal reduced. Regarding new sources, the MACT floor control technology would be a baghouse since the current best performing source is controlled with a baghouse, and the BTF control option for new sources would also be the same as existing (*i.e.,* new source BTF option is based on the addition of a Wet ESP on top of the baghouse). Therefore, we assume the costs for a new source would also be about the same (*i.e.,* $38 million capital, with annualized costs of $4.8 million). The Agency cannot estimate a precise cost effectiveness number because it would depend on unknown factors (such as concentration of HAP metals in the ore and/or other input materials used by a new source). Therefore, the Agency assumes the cost effectiveness for new sources would be roughly the same as for existing sources described above. Based on this analysis, the Agency is not proposing this BTF option for existing or new sources because of the relatively high costs and poor cost effectiveness.

Based on the analyses described above, the Agency is proposing to revise the 2002 NESHAP to include the following MACT floor-based emission limits for anode refining point sources:

- For existing anode refining point sources located at primary copper smelting facilities, we are proposing a PM emissions limit of 5.8 mg/dscm.
- For new anode refining point sources located at primary copper smelting facilities, we are proposing a PM emissions limit of 5.8 mg/dscm.

We propose that compliance with the PM emissions limit for anode refining will be demonstrated through an initial compliance test followed by a compliance test at least once every year.

2. Process Fugitive Roof Vents

The major source NESHAP currently does not include standards for process fugitive emissions from the rooflines of smelting furnaces, converters, or anode refining operations, with the exception of an opacity limit for converter roof vents that applies during testing. We note that some of these rooflines are among the main sources driving risks as described in the discussion of the risk results in section IV.B. Pursuant to CAA section 112(d)(2) and (3), the EPA is proposing to revise the 2002 NESHAP to include emission limits for rooflines for smelting furnaces, converters, and anode refining at existing and new sources.

For smelting furnace and converter rooflines, we evaluated the potential to establish MACT floor emissions limits for PM, as a surrogate for HAP metals, which includes, but is not limited to, antimony, arsenic, beryllium, cadmium, chromium, cobalt, lead, manganese, nickel, and selenium compounds, based on available test data. While the Agency only had test data for one of the two facilities (*i.e.,* Freeport), the Agency used those data for calculating MACT floor PM limits for converters and smelting furnaces using the UPL methodology. Establishing PM as a surrogate for HAP metals is consistent with the approach used to limit metal HAP emissions from the other copper smelting processes in the current NESHAP and for many other source categories (*i.e.,* Ferroalloys Production, Integrated Iron and Steel Manufacturing, Iron and Steel Foundries). Based on our analyses, we calculated a MACT floor emissions limit of 1.7 lbs/hr PM for process fugitive emissions for existing and new converter rooflines and a MACT floor limit of 4.3 lbs/hr PM for existing and new smelting furnaces rooflines.

The EPA also evaluated BTF PM limits for smelting furnace and converter rooflines based on the potential addition of capture and control equipment designed to achieve approximately 90 percent reduction in process fugitive emissions. With regard to smelting furnaces, based on available information, we estimate that 1.2 tpy year of HAP metals are emitted from the smelting flash furnace at Asarco. Freeport has two smelting furnaces. Freeport already has primary and secondary capture systems that capture and control process fugitives, resulting in total estimated HAP metal emissions from both furnaces of 0.626 tpy based on available test data, or about half of the emissions from Asarco's furnace. Asarco has primary capture and control and some secondary capture and control, but based on available reported emission estimates, Asarco emits significantly more HAP metals than Freeport. For the BTF option, we evaluated the potential to add enhanced, improved capture and control equipment to achieve about 90 percent reduction of HAP metal emissions from the Asarco smelting flash furnace (*i.e.,* reduce estimated HAP metal emissions from 1.2 tpy to about 0.12 tpy). To achieve 90 percent reduction of process fugitives from the rooflines, the Agency assumes additional secondary capture and/or enhanced capture (*e.g.,* hooding, duct work, fans, etc.) would be needed for at least one operation (*i.e.,* matte tapping/pouring). We think another significant source of fugitives is the material transfer operation, which includes movement of a large ladle containing very hot liquid matte from the flash furnace tapping/pouring operation by an overhead crane to the converters after each tapping/pouring operation. To capture these fugitive emissions from the material transfer operations, we assume a roof ventilation capture system would be needed. We also assume a new baghouse (or other PM collection control device) would be needed to handle these additional exhaust gases. Another potential source of fugitives is the pouring/tapping of slag, but we are assuming 90 percent reduction could be achieved by adding a secondary capture and/or enhanced capture system to reduce fugitive emissions from at least one operation, such as the matte tapping/pouring, without adding capture and control equipment to the slag operation. Therefore, no costs are estimated for capturing fugitives from the slag pouring process.

Furthermore, to comply with this BTF option for smelting furnaces, we estimate Freeport would also need to reduce HAP emissions. If the standard was based on total emissions from smelting furnaces, we estimate Freeport would need to achieve 80 percent reduction (*e.g.,* from 0.626 to 0.12 tpy,

which is the target level described above for the Asarco smelting furnace). To achieve this level of additional reductions of process fugitive emissions, we assume Freeport would need to install two roof ventilation capture systems, one for each of its two furnaces. Further details of this beyond the floor analysis are provided in the technical memo *Evaluation of Beyond-the-floor and Ample Margin of Safety Control Options and Costs for Process Fugitive Emissions from Smelting Furnaces and Converters, and for Point Source Emissions from Anode Refining Furnaces and for the Combined Emissions Stream Emitted from the Freeport Aisle Scrubber,* which is available in the docket for this action.

Based on this analysis, the Agency estimates the BTF PM limit of 0.12 tpy for existing sources would have total capital costs of $26,501,600 and annualized costs of $5,443,937 and would achieve about 1.53 tpy reduction of HAP metals, with cost effectiveness of $3,445,529 per ton of HAP metal reduction. With regard to new sources (*i.e.,* new furnaces), since the MACT Floor limit is based on test data from Freeport, the Agency assumes the BTF controls for a new furnace would be similar to the BTF controls described above for Freeport (*i.e.,* need to install a roof ventilation capture system on top of whatever controls they need to meet the MACT Floor level of control for each new furnace). Based on costs estimated for Freeport, and applying this to a potential new source, the estimated costs for BTF option for a new furnace would be $3,700,000 capital and annualized costs of $600,000 and achieve about 0.25 tpy metal HAP reduction, with cost effectiveness of $2,400,000 per ton of HAP. Further information and details regarding the MACT floor and BTF analyses are provided in the memorandum titled *Draft MACT Floor Analyses for the Primary Copper Smelting Source Category,* and in the costs memo cited above, which are available in the docket for this proposed action.

With regard to converters, Asarco has three converters and Freeport has four converters. Asarco already has primary, secondary and tertiary capture and controls, and the reported total estimated HAP emissions are 0.0000022 tpy. On the other hand, Freeport has primary and secondary capture and controls, but no tertiary controls, and the total estimated HAP emissions from Freeport converters are 0.115 tpy. Therefore, we considered proposing a BTF option for existing converters for the source category that would require reductions at Freeport based on installation of tertiary controls which would be similar to the tertiary capture and controls on the converters at Asarco or the roof ventilation capture system described in the BTF analysis above for Freeport smelting furnaces. Given that all four converters at Freeport are in the same building, we assume that one such system would be sufficient to achieve about 80 percent reduction of fugitives. We assume Freeport could route these additional emissions to current control devices, since they already have two such control systems (*i.e.,* scrubbers). Therefore, we are not including an additional baghouse for this potential BTF control option. Based on the analysis described above, the Agency estimates this potential BTF standard for existing converters would have total capital costs of $3,697,200 and annualized costs of $599,663, and achieve about 0.09 tpy reduction of HAP metals, with cost effectiveness of $6,662,928 per ton of HAP metal reduction.

With regard to potential BTF standards for process fugitive emissions from roof vents for new converters, it is difficult to determine the appropriate standard because of a number of issues and uncertainties. First, based on reported emissions described above, Asarco has substantially lower HAP metal emissions as compared to Freeport. However, we have no test data for Asarco, so we have low confidence in these reported emissions estimates. Second, as described above, the current NESHAP prohibits new sources from using batch converters. Therefore, we assume any new converter would be a continuous converter, and we have no test data or even estimates of process fugitive emissions from continuous converter building roof vents. Based on this lack of information, we assume the BTF limit and associated costs for process fugitives for new sources would be the same as the BTF limit and associated costs for existing sources described in the paragraph above.

The EPA also evaluated the potential to establish MACT floor limits, or BTF limits, for HAP metals based on establishing additional opacity limits in the NESHAP for each affected source. For example, we considered proposing opacity limits consistent with the state air permits and opacity limits in the Consent Decree (CD) for Asarco as potential MACT standards in addition to, or instead of, the MACT floor PM limits. The opacity limits are not expected to result in emission reductions. Instead, the opacity would be monitored to ensure that the process equipment and control devices are operating properly. Furthermore, there would be no additional costs associated with establishing these opacity limits, since the limits would be consistent with what the facilities are already complying with under the state air permits or a CD. There is variability in opacity limits in the state air permits and CD and uncertainty as to what specific opacity limits represent MACT floor and BTF for each of the processes. These opacity limits are described in detail in the memorandum titled *Opacity Standards for Major Primary Copper Smelting Facilities,* which is available in the docket.

Based on the above analyses, we are proposing the MACT floor PM emissions limits as a surrogate for metal HAP for converter and smelting furnace roof vents. The Agency is not proposing the BTF limits for converters or smelting furnaces because of the high costs and poor cost effectiveness and uncertainties in the estimates of emissions, emissions reductions and costs. Furthermore, the Agency is not proposing the opacity limits at this time due to variability in opacity limits in the state air permits and CD and uncertainty as to what specific opacity limits represent MACT floor and BTF for each of the processes. Nevertheless, the EPA solicits comments regarding the opacity limits, including whether it would be appropriate to establish opacity limits (such as the opacity limits in the state air permits and CD) in the NESHAP in addition to, or instead of, the numeric PM MACT floor emissions limits described above, and, if so, an explanation as to how or why these opacity limits reflect MACT floor, or BTF, levels of control. The Agency also solicits comments, data and other information regarding the MACT Floor analyses and BTF analyses, and our proposed determinations described above.

With regard to process fugitive emissions from anode refining roof vents, we estimate that Freeport emits 5.22 tpy of total metal HAP, comprised mainly of lead (4.09 tpy) and arsenic (0.622 tpy), and that Asarco emits 0.1076 tpy of total metal HAP. To develop a proposed standard for this source, we initially calculated a MACT floor emissions limit for PM of 15.2 lbs/hr based on available test data and application of the UPL methodology. For this standard, PM serves as a surrogate for all particulate HAP metals, similar to the other PM limits in the NESHAP.

Subsequently, we evaluated a potential BTF PM emissions limit for the anode refining roof vents, which would be set at a level approximately 90 percent lower than the MACT floor

limit. Based on these analyses, which are described in detail in the *Draft MACT Floor Analyses for the Primary Copper Smelting Source Category* memorandum, which is available in the docket, the BTF emissions limit for PM is 1.6 lbs/hr. Based on available data, to comply with this BTF limit, we expect the Freeport facility would need to install improved capture systems, including hoods, ductwork, and fans, and one additional baghouse to reduce process fugitive emissions from anode refining roof vents. We anticipate the improved capture systems would need to be applied to four units, including the two anode refining furnace pouring operations, the anode casting wheel, and the holding vessel. However, the facility might identify other methods or approaches to reduce these emissions, such as applying these equipment to only a subset of the four units, limiting the input of certain raw materials that have relatively high HAP metal content (such as acid plant sludge) into the process, and/or converting their holding vessel into an enclosed, controlled anode refining furnace. The Agency expects that the capture, control and/or other measures the facility adopts to reduce metal HAP emissions from roof vents on anode refining buildings to meet the BTF limit will also significantly reduce human health risks (*e.g.,* due to lead and arsenic emissions) as discussed below in section IV.C.2.

The Agency estimates that total costs for Freeport to comply with this BTF PM emissions limit would be capital costs of $5,887,000 and annualized costs of $1,558,000, and would achieve about 4.25 tpy reduction of lead and arsenic emissions, with cost effectiveness of $367,000 per ton of lead and arsenic reduction. Lead and arsenic account for more than 90 percent of the HAP metal emissions from the roof vents on the anode refining building at Freeport. This cost effectiveness estimate is within the range of cost effectiveness values that EPA has historically considered acceptable for lead when compared to similar prior rulemakings. For example, in the 2012 Secondary Lead Smelting RTR, EPA accepted a cost effectiveness up to about $1.3M/ton for metal HAP (mainly Pb, based on 2009 dollars). The EPA's consideration of the cost effectiveness estimate of $367,000 per ton of lead and arsenic (noted above) also reflects fact-specific circumstances for addressing lead and arsenic emissions from the Primary Copper Smelting source category. For example, in other instances when the focus is on controlling other pollutants, such as PM, the agency would compare to other cost-effectiveness values. It is also important to note that cost effectiveness is but one factor we consider in assessing the cost of the emission reduction at issue here. See *NRDC* v. *EPA,* 749 F.3d 1055, 1060 (D.C. Cir. April 18, 2014) (''Section 112 does not command EPA to use a particular form of cost analysis.''). We also consider other factors in assessing the cost of the emission reduction as part of our BTF analysis, including, but not limited to, total capital costs, annual costs and costs compared to total revenues (*e.g.,* costs to revenue ratios). As explained in section V.D., the estimated total annualized costs for Freeport are about 0.016 percent of the annual revenue of the facility's ultimate parent company in 2019. Furthermore, based on Freeport's existing permit, background information in a consent order with the state of Arizona (which are available in the docket), and discussions with facility representatives, improvements to their anode refining capture and control systems are already being considered. Because estimated HAP metals emissions from Asarco are much lower, they would not be expected to incur additional control costs to meet the BTF limit. However, Asarco would have new costs for compliance testing and recordkeeping and reporting, as described below. Overall, the EPA concludes that these costs are not economically significant and the cost effectiveness is within the range accepted in other NESHAP for these types of HAP metals (*e.g.,* Secondary Lead RTR Proposed Rule, 76 FR 99, 29032, May 19, 2011, and the Final rule, 77 FR 3, 556, January 5, 2012).

The Agency also considered proposing a BTF lead emissions limit in addition to, or instead of, the PM limit since lead is the primary HAP metal emitted from the anode refining roof vents. For example, the Agency considered a possible lead limit of approximately 0.26 lbs/hr as a potential BTF MACT limit for anode refining process fugitive emissions, which is described in the MACT Floor memo cited above. However, there is some uncertainty with this analysis. It was not clear how best to apply the EPA's UPL methodology to the available lead emissions data to appropriately account for variability and determine a lead UPL limit that would reflect the MACT floor level of control, and to then subsequently determine what lead limit would represent a 90 percent reduction from the lead MACT Floor. The EPA expects the costs and reductions for such a lead BTF limit would be the same as the costs and reductions for the BTF option for PM described in the above paragraph. If the Agency was to establish such a lead limit instead of a PM limit, it would also serve as a surrogate for all HAP metals, similar to the Secondary Lead Smelting NESHAP, which established emissions limits for lead that serve as surrogates for all particulate HAP metals. Due to the uncertainties with the analysis of lead emissions and methodology used to develop the lead UPL limit, the Agency is not proposing this lead limit at this time. However, the EPA solicits comments regarding this potential lead limit and whether it would be appropriate to establish such a lead limit in addition to, or instead of, the PM limit, and if so, why?

Further information and details regarding the derivation of the MACT floor and BTF limits are provided in the memorandum titled *Draft MACT Floor Analyses for the Primary Copper Smelting Source Category.* Further information and details regarding the cost estimates for Freeport to comply with the BTF limits for the anode refining process fugitives roof vents are described in the memorandum *Development of Estimated Costs for Enhanced Capture and Control of Process Fugitive Emissions from Anode Refining Operations at Freeport,* which is available in the docket for this proposed action.

Based on the analyses described above, the Agency is proposing a BTF emissions limit for PM of 1.6 lbs/hr for anode refining process fugitive emissions at existing and new sources.

In summary, based on the analyses described above, the Agency is proposing to revise the 2002 NESHAP to include the following emission limits for process fugitive HAP metal emissions from roof vents of smelting furnaces, converters, and anode refining processes located at primary copper smelting facilities, as follows:

- For existing and new converter operations located at primary copper smelting facilities, the Agency is proposing a PM emissions limit of 1.7 lbs/hr for process fugitive roof vents.
- For existing and new smelting furnaces located at primary copper smelting facilities, the Agency is proposing a PM emissions limit of 4.3 lbs/hr for process fugitive roof vents.
- For existing and new anode refining operations located at primary copper smelting facilities, the Agency is proposing a PM emissions limit of 1.6 lbs/hr for process fugitive roof vents.

The Agency is proposing that compliance with these emissions limits for smelting furnaces, converters and

anode refining will be demonstrated through an initial compliance test followed by a compliance test at least once every year. Moreover, facilities will need to monitor various control parameters (*e.g.,* fan speed, amperage, pressure drops, and/or damper positioning) on a continuous basis to ensure the fugitive capture system and controls are working properly.

With regard to testing and recordkeeping costs, the Agency estimates Asarco will have total costs of about $95,000 per year for all the testing and recordkeeping and reporting to demonstrate compliance with these proposed three new standards for the process fugitive emissions roof vents for the converters, smelting furnaces and anode refining processes. As mentioned above, Freeport will have no new testing costs since they already conduct this testing per ADEQ requirements.

3. Mercury

As mentioned above, the 2002 NESHAP does not include emission limits for mercury. The source category emits an estimated 55 pounds of mercury annually with 45 pounds per year emitted from the Freeport facility. Because of the temperatures of exhaust gas streams encountered at primary copper smelting operations, much of the mercury emitted is in vapor form, not in a particulate form. The vapor form of mercury is not captured by the controls used to reduce PM emissions. Therefore, the PM limits do not serve as a surrogate for mercury. Pursuant to CAA section 112(d)(2) and (3), the Agency is proposing to revise the 2002 NESHAP to include emission limits for mercury.

Initially the Agency calculated MACT floor limits based on test data from both of the primary copper smelting facilities. A detailed analysis and documentation of the MACT floor calculations can be found in the technical document, *Draft MACT Floor Analyses for the Primary Copper Smelting Source Category,* available in the docket.

The MACT floor emissions limit for existing sources was calculated based on the average of all the emissions tests from both facilities, accounting for variability using the 99 percent UPL. A MACT floor based on the 99 percent UPL for the combined facility-wide limit for existing sources is 0.01 lbs/hr. Based on available data, the Agency concludes that both facilities would be able to meet the MACT floor limit with no additional controls.

For new sources, the Agency calculated a MACT floor limit of 0.00097 lbs/hr based on emissions data from the best performing (or lowest emitting) facility, which is Asarco.

We then evaluated and considered a BTF option to further reduce emissions of mercury from existing furnaces and converters. Based on available test data, the Agency estimates that the acid plant is by far the largest source of mercury emissions at Freeport, accounting for about 64 percent of the total, with an estimated 29 lbs/yr of mercury emissions. The BTF option for existing sources would require the Freeport facility to install and operate an activated carbon injection (ACI) system and a polishing baghouse on the combined stack emissions release point, the acid plant. The Agency estimates the ACI system would achieve approximately 90 percent reduction of mercury from the acid plant stack (*i.e.,* 26 lbs/yr reduction of mercury). Therefore, the BTF emissions limit would be 0.0043 lbs/hr, which reflects a 90 percent reduction from the acid plant portion of the UPL MACT floor level of 0.01 lbs//hr described above.

The EPA estimates that these controls would achieve 26 pounds of mercury reductions per year (*i.e.,* 90 percent reduction of emissions from the acid plant), at a capital cost of $1.5 million and annualized costs of $714,000 (in 2019 dollars) for a cost effectiveness of $27,500 per pound of mercury reduced. After considering both the MACT floor and BTF options for existing sources, the EPA is proposing the BTF facility-wide emissions limit for mercury of 0.0043 lbs/hr for existing sources. The EPA is proposing this BTF limit for mercury because mercury is a highly toxic, persistent and bioaccumulative HAP and the estimated cost effectiveness is within the range of cost effectiveness values the EPA has previously considered acceptable for this HAP after correcting to dollar year values. For example, in the 2012 Mercury and Air Toxics (MATS) final rule, EPA finalized a BTF standard for mercury that had cost effectiveness of $22,496 per pound (based on 2007 dollars), which would be about $27,500 per pound based on 2019 dollars (see *Regulatory Impact Analysis for the Final Mercury and Air Toxics Standards,* December 2011, on pages 1–9 and 1–10, available at: *https://www.epa.gov/mats/epa-announces-mercury-and-air-toxics-standards-mats-power-plants-technical-information*).

A detailed analysis and documentation of the BTF option for the Primary Copper Smelting major source NESHAP and cost calculations can be found in the technical document, *Estimated Costs for Beyond-the-floor Controls for Mercury Emissions from Primary Copper Smelting Facilities,* available in the docket for this action.

With regard to new sources, as described above, the MACT floor for new sources (*i.e.,* 0.00097 lbs/hr) is already significantly lower than the BTF limit for existing sources (*i.e.,* 0.0043 lbs/hr). The EPA evaluated a potential BTF option to further reduce emissions of mercury from new furnaces and converters. This analysis is very similar to that described above for existing furnaces and converters, which would require the installation and operation of at least one ACI system plus a polishing baghouse on a combined emissions stream from the converter and furnace. Therefore, the EPA assumes the costs for a beyond the floor option for a new source could be the same as shown above for Freeport. With regard to numerical emissions limit, if the Agency assumes the same percentage reduction from the new source MACT floor (*i.e.,* 0.00097 lbs/hr) that the Agency described above for existing sources, that would result in a BTF limit for new sources of 0.00042 lbs/hr.

However, with regard to reductions, it is impossible to accurately estimate potential reductions in mercury from a new source without knowing more information regarding a potential new source. For example, mercury emissions are highly dependent on the concentration of mercury in the ore and mercury concentrations can vary significantly across different ore bodies. If the EPA assumes a new source would have similar ore as Asarco, which has much lower mercury emissions compared to Freeport, the costs for controls could be similar to those estimated for Freeport above. However, the emissions reductions would be far lower, and therefore the controls would probably not be cost effective. If, on the other hand, the ore was similar to Freeport's, it may not be feasible for such a facility to achieve a limit of 0.00042 lbs/hr) with these types of controls. For example, if such a facility had characteristics similar to Freeport, they would likely need to achieve far greater reductions than 90 percent from the acid plant to achieve a limit of 0.00042 lbs/hr, which would require additional controls beyond the ACI system and polishing baghouse described above.

Given these uncertainties described above, and the fact that the new source MACT floor limit (*i.e.,* 0.00097 lbs/hr) is already significantly lower than the BTF limit for existing sources of 0.0043 lbs/hr, the Agency is proposing a MACT floor limit for mercury for new sources of 0.00097 lbs/hr. More details are provided in the memorandums titled

Draft MACT Floor Analyses for the Primary Copper Smelting Source Category and *Estimated Costs for Beyond-the-floor Controls for Mercury Emissions from Primary Copper Smelting Facilities,* which are available in the docket for this action.

Based on the analysis described above, the Agency is proposing to revise the 2002 NESHAP to include the following emission limits for mercury:

- For existing primary copper smelting facilities, the Agency is proposing a facility-wide BTF emissions limit for mercury of 0.0043 lbs/hr.
- For new primary copper smelting facilities, the Agency is proposing a facility-wide MACT Floor emissions limit for mercury of 0.00097 lbs/hr.

The EPA is proposing that compliance with the mercury emissions limits for existing sources will be demonstrated through an initial compliance test for each of the affected sources (*e.g.,* furnaces, converters, anode refining) within 3 years of publication of the final rule followed by a compliance test at least once every year. The actual number of tests required will depend on the specific configurations of the emissions capture and control equipment and number of release points at each facility. For affected facilities that commence construction or reconstruction after January 11, 2022, owners or operators must comply with all requirements of the subpart, including all the amendments being proposed, no later than the effective date of the final rule or upon startup, whichever is later.

The EPA solicit comments, information and data regarding the proposed standards for mercury, and the relevant technical analyses described above, as well as the proposed compliance dates and testing requirements.

4. New Source Limits for Converters in the Major Source NESHAP

The current requirement for new copper converters is that the NESHAP prohibits the use of batch copper converters. By default, new copper converters covered by the NESHAP would need to be continuous converters, or some other unknown non-batch converter technology, but the rule does not include an actual standard for new converters. Therefore, pursuant to CAA section 112(d)(2) and (3), the Agency is proposing to revise the 2002 NESHAP to include emission limits for new converters. We note that there are no existing continuous converters in the major source category, and, therefore, the Agency is not establishing an emissions limit for existing sources. The Agency is proposing a PM with a diameter less than 10 micrometers (PM_{10}) emissions limit as a surrogate for metal HAP based on PM_{10} test data from the Kennecott facility which is an area source subject to 40 CFR part 63, subpart EEEEEE, area source rule. Therefore, the limit is based on the performance of the best similar source, which is the Kennecott primary copper smelting facility. The proposed input-based emissions limit would require the discharge of total PM_{10} to be no greater than 0.031 pounds of PM_{10} per ton of copper concentrate feed charged to the smelting vessel. A detailed discussion of the selection of the new source limit can be found in the preamble to the proposed rule for subpart EEEEEE (71 FR 59307, 59310, October 6, 2006). The calculation of the limit of 0.031 lbs of PM_{10} per ton of copper concentrate feed is described in the technical memo titled: *Draft MACT Floor Analyses for the Primary Copper Smelting Source Category.*

We then evaluated whether there are any potential BTF options to further limit PM_{10} emissions from new converters; however, we did not identify any BTF options. Therefore, we are proposing a limit of 0.031 pounds of PM_{10} per ton of copper concentrate feed charged to the smelting vessel.

The EPA proposes that compliance with the PM_{10} emissions limit for new converters would be demonstrated through an initial compliance test followed by a compliance test at least once every year.

B. What are the results of the risk assessment and analyses?

1. Chronic Inhalation Risk Assessment Results

Table 1 of this preamble provides a summary of the results of the inhalation risk assessment for the source category. The two facilities in this major source category are located in Arizona in a rural, desert environment that is, for the most part, sparsely populated. More detailed information on the risk assessment can be found in the document titled *Residual Risk Assessment for the Primary Copper Smelting Major Source Category in Support of the Risk and Technology Review 2021 Proposed Rule,* available in the docket for this rule.

TABLE 1—PRIMARY COPPER SMELTING MAJOR SOURCE CATEGORY INHALATION RISK ASSESSMENT RESULTS

Number of facilities [1]	Maximum individual cancer risk (in 1 million) [2] based on . . .		Population at increased risk of cancer ≥ 1-in-1 million based on . . .		Annual cancer incidence (cases per year) based on . . .		Maximum noncancer HI and 3-month lead concentration (ug/m³) [3]		Maximum screening acute noncancer HQ [4] based on . . .
	Actual emissions	Allowable emissions	Actual emissions	Allowable emissions	Actual emissions	Allowable emissions	Actual emissions	Allowable emissions	Actual emissions
2	80	90	26,125	29,001	0.003	0.003	HI = 1 (arsenic) developmental. Pb Conc: 0.17	HI = 1 (arsenic) developmental. Pb Conc: 0.24.	HQ (REL) = 7 (Arsenic).

[1] Number of facilities evaluated in the risk analysis.
[2] Maximum individual excess lifetime cancer and noncancer risk due to arsenic emissions from the source category, 71 percent from the anode refining roofline at Freeport and 23 percent from anode furnaces and converters point source emissions from the Aisle Scrubber at Freeport.
[3] The max 3-month off-site lead concentration is compared to the lead (Pb) NAAQS standard of 0.15 ug/m³ based upon actual and allowable emissions from the source category. The Pb NAAQS standard was developed to address all exposure pathways (inhalation and ingestion).
[4] The maximum estimated off-site acute exposure concentration was divided by available short-term dose-response values to develop an array of HQ values. HQ values shown use the lowest available acute dose-response value, which in most cases is the REL. There are no other acute health benchmarks for arsenic other than the 1-hour REL.

Results of the inhalation risk assessment based on actual emissions indicate that the cancer MIR is 80-in-1 million. The total estimated cancer incidence from this source category is 0.003 excess cancer cases per year, or one excess case every 333 years, with arsenic compounds contributing 95 percent of the cancer incidence for the source category. Approximately 26,125 people of the 46,460 people in the model domain are estimated to have cancer risks above 1-in-1 million from HAP emitted from this source category. The HEM–4 model predicted the maximum chronic noncancer HI value for the source category is equal to 1 (developmental), driven by emissions of

arsenic from the anode refining roofline at Freeport and the anode furnaces and secondary converter point source emissions emitted through the Aisle Scrubber at Freeport.

Results of the inhalation risk assessment based on MACT-allowable emissions indicate that the cancer MIR is 90-in-1 million. The total estimated cancer incidence from this source category is 0.003 excess cancer cases per year, or one excess case every 333 years, with arsenic contributing 90 percent and cadmium contributing 8 percent of the cancer incidence for the source category. Approximately 29,001 people are estimated to have cancer risks above 1-in-1 million from exposure to HAP emissions allowed under the NESHAP. The HEM–4 model predicted the maximum chronic noncancer HI value for the source category is equal to 1 (developmental), driven by emissions of arsenic from the anode refining roofline and the anode furnaces and converters. No individuals are estimated to have exposures that result in a noncancer HI above 1 at allowable emission rates.

A refined modeling analysis was conducted at the facility with the highest annual concentration of lead to characterize ambient concentrations of lead for 3-month intervals. The maximum 3-month concentration was predicted for each off-site receptor. The concentrations were then compared to the Lead (Pb) NAAQS of 0.15 ug/m^3. The maximum 3-month off-site modeled concentration was 0.17 ug/m^3 for actual emissions and 0.24 ug/m^3 for allowable emissions, and these results occurred near the Freeport facility. The lead standard is based on exposure to all pathways (inhalation and ingestion) due to lead emitted to the air and includes an adequate margin of safety to be protective of all sub-populations at risk, especially children. Lead concentrations above the standard increase the risk of developmental effects for children. Model results indicate that, based on actual emissions, a single census block (about five people) has the potential to be exposed to lead concentrations greater than the lead NAAQS. For allowable emissions, the analysis predicts that eight census blocks (about 50 people) have modeled lead concentrations greater than the lead NAAQS. While the EPA examines the potential for lead risks and exposure by comparing ambient levels directly to the NAAQS, the noncancer risks predicted for this category from arsenic are also associated with developmental effects. Thus, while the Agency did not combine the risk of developmental effects from exposure to lead with the hazard associated with exposure to arsenic, the Agency would expect their combined hazard to be greater than each of the individual exposures and hazards presented above.

2. Screening Level Acute Risk Assessment Results

To better characterize the potential health risks associated with estimated worst-case acute exposures to HAP, and in response to a key recommendation from the SAB's peer review of the EPA's RTR risk assessment methodologies, the Agency examined a wider range of available acute health metrics than the Agency does for our chronic risk assessments. This is in acknowledgement that there are generally more data gaps and uncertainties in acute reference values than there are in chronic reference values. By definition, the acute REL represents a health-protective level of exposure, with effects not anticipated below those levels, even for repeated exposures. However, the level of exposure that would cause health effects is not specifically known. Therefore, when an REL is exceeded and an AEGL–1 or ERPG–1 level is available (*i.e.,* levels at which mild, reversible effects are anticipated in the general public for a single exposure), the Agency typically uses them as an additional comparative measure, as they provide an upper bound for exposure levels above which exposed individuals could experience effects. As the exposure concentration increases above the acute REL, the potential for effects increases.

A review of all modeled off-site receptors for the Primary Copper Smelting source category identified exceedance of the 1-hour REL for arsenic, resulting in an HQ of 7 for arsenic. This is for actual baseline emissions. Satellite imagery for this location identifies it as a residential location approximately 4,200 meters northeast of the Freeport facility. It is also important to note that the primary source of the arsenic emissions from the anode furnace/converter and anode refining roofline was modeled with an hourly emissions multiplier of 3 times the annual average emissions rate. There are no AEGL or ERPG levels available for arsenic. No other HAP exposure concentrations exceeded acute benchmarks. Further details on the acute HQ estimates are provided in Appendix 10 of the risk report for this source category.

3. Multipathway Risk Screening

For this source category both facilities reported emissions of lead, which are compared to the lead NAAQS, and emissions of PB–HAP, which are compared to the Tier 1 screening threshold emission rate for each PB–HAP based upon a combined fisher/farmer scenario with upper-bound ingestion rates. The two facilities within this source category both reported emissions of carcinogenic PB–HAP (arsenic) and emissions of non-carcinogenic PB–HAP (cadmium and mercury) that exceeded their respective Tier 1 screening threshold emission rates. For facilities that exceed the Tier 1 multipathway screening threshold emission rate for one or more PB–HAP, we use additional facility site-specific information to perform a Tier 2 multipathway screening assessment. For the Tier 2 screening, the farmer and fisher scenarios are not combined as they are in the Tier 1 screening. Instead, the farmer and fisher scenarios are treated as separate individuals with the fisher scenario based upon modeled impacts to local lakes within 50 kilometers of the facility. Further details on the tiered multipathway screening methodology can be found in Appendix 6 of the *Residual Risk Assessment for the Primary Copper Smelting Major Source Category in Support of the Risk and Technology Review 2021 Proposed Rule.*

For arsenic, both facilities had Tier 2 SVs (cancer) greater than 1, with a maximum SV of 3,000 for the farmer scenario, a maximum SV of 1,000 for the rural gardener scenario, and a maximum SV of 100 for the fisher scenario. For cadmium, the Tier 2 screening assessment for both the farmer and gardener (rural) scenarios resulted in maximum Tier 2 SVs (noncancer) of 4. For the fisher scenario, Tier 2 noncancer SVs were greater than 1 for mercury compounds and cadmium compounds for one facility with a maximum noncancer SV of 20 for mercury and the maximum noncancer SV of 10 for cadmium.

Based upon these results, a Tier 3 screening assessment was conducted for both the fisher and gardener (rural) scenarios. A Tier 3 screening analysis was performed for arsenic, cadmium, and mercury emissions. In the Tier 3 screen for the fisher scenario, lakes near the facilities were reviewed on aerial photographs. As a result of this assessment, the features that were initially identified as lakes driving the Tier 2 screening risks for the fisher scenario were found to be tailings basins (not lakes), which are not fishable. After the tailings basins were removed from the fisher scenario analysis, the maximum cancer SV for arsenic emissions was 30, the maximum noncancer SV for mercury emissions

was 4, and the maximum noncancer SV for cadmium emissions was 4.

The Tier 3 gardener (rural) scenario was refined with the placement of the garden at the MIR residential receptor location approximately 4 km northeast of the facility versus the worst-case near-field location. Based on these Tier 3 refinements to the gardener scenario, the maximum Tier 3 cancer SV of 1,000 (rounded to 1 significant figure) remained the same for arsenic emissions, while the maximum noncancer SV decreased from 4 to 3 for cadmium emissions. An exceedance of a screening threshold emission rate or SV in any of the tiers cannot be equated with a risk value or an HQ (or HI). Rather, it represents a high-end estimate of what the risk or hazard may be. For example, an SV of 2 for a non-carcinogen can be interpreted to mean that the Agency is confident that the HQ would be lower than 2. Similarly, a Tier 2 cancer SV of 7 means that we are confident that the cancer risk is lower than 7-in-1 million. Our confidence comes from the conservative, or health-protective, assumptions encompassed in the screening tiers: The Agency chooses inputs from the upper end of the range of possible values for the influential parameters used in the screening tiers, and the Agency assumes that the exposed individual exhibits ingestion behavior that would lead to a high total exposure.

The EPA determined that it is not necessary to go beyond the Tier 3 lake and gardener analysis or conduct a site-specific assessment for arsenic, cadmium, and mercury. The EPA compared the Tier 2 screening results to site-specific risk estimates for five previously assessed source categories. These are the five source categories, assessed over the past 4 years, which had characteristics that make them most useful for interpreting the Primary Copper Smelting screening results. For these source categories, the EPA assessed fisher and/or gardener risks for arsenic, cadmium, and/or mercury by conducting site-specific assessments. The EPA used AERMOD for air dispersion and Tier 2 screens that used multi-facility aggregation of chemical loading to lakes where appropriate. These assessments indicated that cancer and noncancer site-specific risk values were at least 50 times lower than the respective Tier 2 screening values for the assessed facilities, with the exception of noncancer risks for cadmium for the gardener scenario, where the reduction was at least 10 times (refer to EPA Docket ID: EPA–HQ–OAR–2017–0015 and EPA–HQ–OAR–2019–0373 for a copy of these reports).[30]

Based on our review of these analyses, if the Agency was to perform a site-specific assessment for the Primary Copper Smelting Source Category, the Agency would expect similar magnitudes of decreases from the Tier 2 SVs. As such, based upon the conservative nature of the screens and the level of additional refinements that would go into a site-specific multipathway assessment, were one to be conducted, we are confident that the HQ for ingestion exposure, specifically cadmium and mercury through fish ingestion, is less than 1. For arsenic, maximum cancer risk posed by fish ingestion would also be reduced to levels below 1-in-1 million, and maximum cancer risk under the rural gardener scenario would decrease to 20-in-1 million or less. Also, based upon the arid climate of the area and the hypothetical nature/location of the garden, estimated risks from this scenario seem unlikely. Further details on the Tier 3 screening assessment can be found in Appendix 10–11 of *Residual Risk Assessment for the Primary Copper Smelting Major Source Category in Support of the Risk and Technology Review 2021 Proposed Rule.*

In evaluating the potential for adverse health effects from emissions of lead, the EPA compared modeled maximum 3-month lead concentrations to the secondary NAAQS level for lead of (0.15 μg/m^3) over a 2-year period. The highest off-site 3-month average lead concentration based upon actual emissions was 0.17 μg/m^3. The highest concentration based on allowable emissions was 0.24 μg/m^3. Both results are above the lead NAAQS standard, indicating a potential for adverse health effects from multipathway exposure to lead. For further information on the modeling and monitoring analysis for lead refer to section IV.B.1 (Chronic Inhalation Risk Assessment Results) and section IV.B.6 (Monitor to Model Analysis for Arsenic and Lead).

4. Environmental Risk Screening Results

As described in section III.A of this document, the Agency conducted an environmental risk screening assessment for the primary copper source category for the following pollutants: Arsenic, cadmium, and mercury. In the Tier 1 screening analysis for PB–HAP (other than lead, which was evaluated differently), arsenic, cadmium, divalent mercury and methyl mercury exceeded at least one ecological benchmark, requiring a Tier 2 screen.

A Tier 2 screening assessment was performed for arsenic, cadmium, divalent mercury and methyl mercury. Arsenic, divalent mercury, and methyl mercury had no Tier 2 exceedances for any ecological benchmark. Two facilities contributing emissions to the same lake had cadmium emissions that resulted in Tier 2 exceedances for fish no-observed-adverse-effect level (avian piscivores), fish geometric-maximum-allowable-toxicant level (avian piscivores), and fish lowest-observed-adverse-effect level (avian piscivores) benchmarks with a maximum SV of 3.[31]

A Tier 3 screening analysis was performed for cadmium emissions. In the Tier 3 screen, lakes near the facilities were reviewed on aerial photographs. As a result of this assessment, the waterbody that was initially identified as a lake that was driving the Tier 2 environmental screening risks for cadmium was found to be a tailings basin and was removed from the analysis. After environmental impacts that had been estimated for the tailings basin were removed from the analysis, there were no exceedances of cadmium environmental screening benchmarks in Tier 3. For lead, the Agency estimated an exceedance of the secondary lead NAAQS at one census block at a lead concentration of 0.17 ug/m^3. The exceeded census block constitutes less than 0.1 percent of the modeled area around the facility. Therefore, based on the limited extent of the lead exceedance and the other results of the environmental risk screening analysis, the Agency does not expect an adverse environmental effect as a result of HAP emissions from this source category.

[30] EPA Docket records (EPA–HQ–OAR–2017–0015): *Appendix 11 of the Residual Risk Assessment for the Taconite Manufacturing Source Category in Support of the Risk and Technology Review 2019 Proposed Rule; Appendix 11 of the Residual Risk Assessment for the Integrated Iron and Steel Source Category in Support of the Risk and Technology Review 2019 Proposed Rule; Appendix 11 of the Residual Risk Assessment for the Portland Cement Manufacturing Source Category in Support of the 2018 Risk and Technology Review Final Rule; Appendix 11 of the Residual Risk Assessment for the Coal and Oil-Fired EGU Source Category in Support of the 2018 Risk and Technology Review Proposed Rule;* and EPA Docket: (EPA–HQ–OAR–2019–0373): *Appendix 11* of the *Residual Risk Assessment for Iron and Steel Foundries Source Category in Support of the 2019 Risk and Technology Review Proposed Rule.*

[31] The two facilities in the multipathway analysis are within the same model domain and contribute cadmium emissions to a common lake with the Freeport facility contributing >99 percent of the cadmium loading to the target lake (USGS ID:26665).

5. Facility-Wide Risk Results

The source category includes all the emissions at the facility. Thus, the facility-wide risk is the same as the risk posed by the actual emissions from the source category, refer to Table 1, with no change in incidence or risk drivers.

6. Monitor To Model Analysis for Arsenic and Lead

A monitor to model comparison analysis was conducted for the monitors located at both primary copper smelting facilities to characterize the effectiveness of the emissions modeling and for purposes of risk characterization. Monitoring data collected from both sites represent current process operations at the facilities including process fugitives as well as background contributions from historic activity such as road dust and re-entrainment. A review of emission inventories for the area indicates both plants are the primary contributor of arsenic and lead emissions for their locations. Monitoring samples are collected on a one in 6-day schedule for a 24-hour continuous period. This schedule and the number of active source-driven monitors provide an indication of what emission sources may be contributing to the monitor but still do not provide enough temporal resolution to apportion the emissions to a specific source. Because the sample is collected over a 24-hour period, this apportionment is further complicated by factors such as varying surface winds (wind speed and wind direction) that occur throughout the day as well as unexpected changes in production or upset events that may occur at the plant.

The Hayden area of Gila and Pinal Counties in Arizona is currently classified as nonattainment for the 2010, 1-hour primary SO_2 NAAQS; 2008 lead NAAQS; and 1987 PM_{10} NAAQS. Asarco is the only source of lead and SO_2 emissions in the Hayden nonattainment area. Emission reductions required under a CD with the EPA were designed to bring the Asarco facility into compliance with the NESHAP by December 2018. In addition, revisions to the state implementation plan (SIP) were intended to provide for attainment with the SO_2 and lead NAAQS by the attainment dates of October 2018 and October 2019, respectively. A review of 2019 monitoring data from four total suspended particulates (TSP) lead monitors and five particulate (PM_{10}) monitors in the area around Asarco that measure arsenic and other metals were compared to model results. The modeled concentrations predicted in the above analysis for Asarco were two to five times lower than the monitor concentrations. Refer to Table 2 for comparisons and the respective ambient air concentrations and risk values. Monitor 23 (4th Street and Hillcrest Avenue) was identified as the critical monitor due to its close proximity (within 100 meters) of the modeled MIR location for Asarco. Based upon the 2019 arsenic monitoring data from Monitor 23, excess cancer risks were equal to 90-in-1 million compared to a model-predicted monitor value of 50-in-1 million for Asarco. Monitor values also indicate a chronic noncancer HQ of 1 from arsenic.

The Miami area of Gila County, Arizona, was classified as nonattainment for the 2010, 1-hour primary SO_2 NAAQS in August 2013. Freeport is the only source of lead and SO_2 emissions in the Miami nonattainment area. Emission reductions required under a revision to the SIP were designed to provide for attainment of the SO_2 NAAQS by October 2018. The 2019 monitoring data from the lead NAAQS (TSP) monitor were compared to model results, with modeled concentrations being in close agreement to monitored concentrations. Refer to Table 2 for comparisons of the annual monitored concentrations. AQS Monitor (04–007–8000) is located at the Miami golf course (SR 188 and US 60) and is the only operating monitor for the area. This monitor is located approximately 1,400 meters southwest of the MIR location from the HEM–4 model run. Based on the model analysis presented above, the monitor is located such that the maximum off-site modeled lead concentration may be up to a factor of four times higher than measured at the golf course site. Thus, based on the modeling analysis presented in this risk assessment, the predicted off-site ambient concentrations near the Freeport facility may approach or exceed the maximum lead 3-month average NAAQS of 0.15 ug/m³.

TABLE 2—MONITOR TO MODEL COMPARISON FOR PRIMARY COPPER SMELTING SOURCE CATEGORY FOR ARSENIC AND LEAD

Site	Annual average conc. (ug/m³)		Cancer risk (xx-in-1 million)		HQ	
	Model	Monitor	Model	Monitor	Model	Monitor
Asarco Monitor 23 (As) [1] [2]	0.011	0.022	50	90	0.8	1.4
Asarco Monitor 23 (Pb) [1] [2]	0.025	0.098	NA	NA	NA	NA
Freeport NAAQS Monitor (Pb) [2]	0.026	0.022	NA	NA	NA	NA

[1] The Asarco Monitor 23 is located off-site and within 100 meters of the modeled MIR residential location.
[2] The monitor and modeling data were based upon emission estimates and monitoring data collected for the 2019 calendar year.

With regard to emissions estimates used for the modeling analysis, as discussed in section II.C above, the Agency has higher confidence and less uncertainty with the Freeport emissions as compared to Asarco because the Agency has multiple test results for both point and non-point (*i.e.,* fugitive) sources of emissions for Freeport. However, for Asarco, the Agency only has test data for the point source emissions. The EPA has no test data for the non-point emissions. For Asarco, the non-point (fugitive) emissions estimates are based on emission factors and various calculations.

7. How is baseline risk distributed across demographic groups?

To examine the potential for any environmental justice issues that might be associated with the source category, EPA performed a baseline demographic analysis to identify how risk is distributed among different demographic groups of the populations living within 5 km and within 50 km of the two major source facilities. The methodology and the results of the baseline demographic analysis are presented in the technical report, *Risk and Technology Review—Analysis of Demographic Factors for Populations Living Near Primary Copper Smelting Source Category Operations,* which is available in the docket. This report is discussed in this section regarding estimated impacts under the existing standards (*i.e.,* baseline). In the analysis,

we evaluated the distribution of HAP-related cancer and noncancer risks from the primary copper smelting major source category across different demographic groups within the populations living near facilities.[32] With regard to the Kennecott area source facility, we note that Kennecott is located in a very remote area. The closest residence is estimated to be at least 3 miles from the smelting facility. Furthermore, as described in section III.C of this preamble, ambient monitoring for lead was conducted for about 7 years in the vicinity of Kennecott by Utah DAQ which demonstrated that the likelihood of violating the NAAQS for lead was so low, it would no longer be necessary to run the monitor. Therefore, we did not conduct a demographic analysis for Kennecott.

The results of the baseline demographic analyses, which reflect an average for the two major sources, are summarized in Table 3 below. These results, for various demographic groups, are based on the estimated risk from actual emissions levels for the population living within 50 km of the facilities.

TABLE 3—PRIMARY COPPER SMELTING SOURCE CATEGORY BASELINE DEMOGRAPHIC RISK ANALYSIS RESULTS

	Nationwide [1]	Population with cancer risk at or above 1-in-1 million due to primary copper smelting [2]
Total Population	328,016,242	26,125
White and Minority by Percent		
White [3]	60	36
All Other Races	40	64
Minority by Percent		
African American	12	0.7
Native American	0.7	27
Hispanic or Latino (includes white and nonwhite)	19	33
Other and Multiracial	8	3
Income by Percent		
Below Poverty Level	13	27
Above Poverty Level	87	73
Education by Percent		
Over 25 and without High School Diploma	12	20
Over 25 and with a High School Diploma	88	80
Linguistically Isolated by Percent		
Linguistically Isolated	5	3

[1] The nationwide population is based on the Census' 2015–2019 American Community Survey five-year average and includes Puerto Rico.
[2] Demographics within HEM4 model domain (50 km) of facilities in source category.
[3] We use the term White throughout as shorthand to refer to what Census calls White alone (*i.e.,* single race) who are not Hispanic or Latino (*i.e.,* NHWA). Minority is used throughout to refer to the rest of the population (*i.e.,* all but NHWA). Minority is made up of four groups: African American is used here to refer to what Census calls "Black or African American alone," Native American here refers to what Census calls "American Indian and Alaska Native alone," Hispanic or Latino is the term as used by Census, and Other and Multiracial here refers to the remainder of the minority population.

The results of the primary copper smelting source category baseline demographic analysis indicate that emissions from the major source category expose approximately 26,125 people to a cancer risk at or above 1-in-1 million. No person is exposed to a chronic noncancer TOSHI greater than 1. As shown in Table 3, the average percentages of the at-risk population in the Native American, Hispanic, Below Poverty Level, and Over 25 without High School Diploma demographic groups are significantly greater than their respective nationwide percentages. Note, for one facility, Asarco, the baseline demographic analysis indicates that of the population with risks at or above 1-in-1 million, 73 percent are Hispanic, which is significantly greater than the nationwide percentage, 19 percent, as described further in the demographic analysis technical report cited above. Thus, the elevated cancer risks associated with emissions from the major source category disproportionately affect communities with environmental justice concerns, including low-income residents, Native Americans, and Hispanics living near these facilities.

With regard to acute noncancer risks, the acute screening analysis completed for this proposed rule is a conservative approach that applies health protective assumptions that every process releases its peak hourly emissions at the same hour, that the reasonable worst-case dispersion conditions occur at that same

[32] Demographic groups included in the analysis are: White, African American, Native American, other races and multiracial, Hispanic or Latino, children 17 years of age and under, adults 18 to 64 years of age, adults 65 years of age and over, adults without a high school diploma, people living below the poverty level, people living two times the poverty level, and linguistically isolated people.

hour, and that an individual is present at the location of maximum HAP concentration for that hour. Estimating population risks or the number of individuals exposed to acute events that exceed the arsenic acute 1-hour REL would be problematic due to the nature of the screening assessment, especially for a specific hour in which this event would occur. Due to this uncertainty, we did not complete a demographics analysis for acute noncancer risks.

With regard to lead, the modeled exceedances of the lead NAAQS based on estimated actual emissions were estimated to occur only in a small area near Freeport and we did not have precise demographic information for that specific area. Therefore, we did not conduct a demographics analysis for lead.

Nevertheless, since the potential acute risks from arsenic emissions, and the highest estimated exposures due to lead emissions, are from the same facility and sources that drive the cancer risks for the source category, we expect that the demographic make-up of the exposed populations living near the facility (who could have potential acute risks and higher lead exposures due to these emissions) would be similar to the profiles presented in Table 3 above.

C. What are our proposed decisions regarding risk acceptability, ample margin of safety, and adverse environmental effect?

1. Risk Acceptability

As explained in section III of this preamble, the EPA sets standards under CAA section 112(f)(2) using ''a two-step standard-setting approach, with an analytical first step to determine an 'acceptable risk' that considers all health information, including risk estimation uncertainty, and includes a presumptive limit on maximum individual risk (MIR) of approximately 1-in-10 thousand'' (see 54 FR 38045, September 14, 1989). In this proposal, the EPA estimated risks based on actual and allowable emissions from the primary copper smelting major source category under the current NESHAP.

The estimated inhalation cancer risk to the individual most exposed to allowable emissions from the source category is 90-in-1 million. The estimated inhalation cancer risk to the individual most exposed to actual emissions from the source category is 80-in-1 million. The estimated incidence of cancer due to inhalation exposures is 0.003 excess cancer cases per year, or one excess case every 333 years. The estimated number of people to have cancer risk above 1–in-1 million from HAP allowed to be emitted from the facilities in this source category is 29,001.

Based on allowable lead emissions, the maximum 3-month off-site modeled concentration was estimated to be as high as 0.24 ug/m^3, above the lead NAAQS of 0.15 ug/m^3. Further, based on actual lead emissions, the maximum 3-month off-site modeled concentration was estimated to be 0.17 ug/m^3, above the lead NAAQS of 0.15 ug/m^3. The lead standard is based upon exposure through all pathways (inhalation and ingestion) with an adequate margin of safety to be protective of all sub-populations at risk, including and especially children. Lead concentrations above the NAAQS increase the risk of developmental effects for children. While the Agency examined the potential risk from lead exposure by comparing ambient levels directly to the NAAQS, the noncancer risks predicted for this category from arsenic are also associated with developmental effects. Thus, while the Agency did not combine the risk of developmental effects from exposure to lead with the hazard index associated with exposure to arsenic, the Agency would expect the combined exposures and hazards to be greater than each of the individual exposures and hazards presented above.

The multipathway risk assessment results indicated a maximum Tier 3 cancer risk of 1000-in-1 million based on the rural gardener scenario and a maximum Tier 3 noncancer HQ of 4 for the fisher scenario. Based upon past experience with site-specific assessments, the Agency would expect a minimum decrease by a factor of 50 for the above risks. Also, due to the arid climate of the area and the hypothetical nature/location of the garden, estimated upper-end ingestion rates for this scenario seem unlikely for this area. Further, the Agency estimated that the HQs for ingestion exposure, specifically for cadmium and mercury through fish ingestion, are less than 1.

The acute risk screening assessment of reasonable worst-case inhalation impacts indicates a maximum off-site acute HQ (REL) of 7, located at a residential location.

Considering all of the health risk information and factors discussed above, including the uncertainties discussed in section III of this preamble, the EPA proposes that the risks for this source category under the current MACT provisions are unacceptable. This proposed determination is largely based on the estimated exceedances of the lead NAAQS described above along with the maximum acute HQ of 7 for arsenic, which indicate there are significant risks of noncancer health effects for people near the facility. Also contributing to this proposed determination, although to a lesser extent, are the inhalation cancer MIRs due to arsenic, with an estimated MIR of 80-in-1 million for actual emissions and 90-in-1 million for allowable emissions, which are approaching the presumptive level of unacceptability of 100-in-1 million (described above in this preamble).

2. Proposed Controls To Address Unacceptable Risk

As discussed in section IV.C.1 above, the Agency is proposing that baseline risks (actual emissions) are unacceptable. The largest contributors to these unacceptable risks are the metal HAP (mainly lead and arsenic) emissions from the anode refining process fugitive emissions roof vents at Freeport, which constitute about 71 percent of the MIR. As described in section IV.A above, under the section 112(d)(2)/(d)(3) of the CAA, the Agency is proposing BTF emissions limits for PM, as a surrogate for metal HAP, for the anode refining process fugitive emissions roof vents, which the Agency estimates will reduce HAP metal emissions from this source by about 90 percent at Freeport. The EPA evaluated whether these reductions will further reduce cancer risks and noncancer hazards to an acceptable level by conducting a ''post-control'' risk assessment to estimate what the risks will be after implementation of the BTF PM emissions limit. Based on that analysis, the Agency estimates the inhalation cancer MIR will be reduced from 80-in-1 million to 30-in-1 million at Freeport with 20,566 people exposed to a cancer risk greater than or equal to 1-in-1 million, a 21 percent reduction when compared to cancer risk from actual emissions. The chronic noncancer HI will remain well below 1 and the maximum off-site acute HQ based on the 1-hour REL will be reduced from 7 to 2. Further, the maximum 3-month lead ambient concentration will be reduced below the NAAQS from 0.17 μg/m^3 to 0.073 ug/m^3. However, the modeled cancer MIR for the source category would be 60-in-1 million, since the EPA expects the BTF limit will achieve no reductions from Asarco. Based on these results, the Agency is proposing that the emissions reductions that will be achieved by the BTF emissions limit for PM for anode refining process fugitive roof vents (described in section IV.A above) will be sufficient to achieve acceptable risks.

Therefore, to reduce risks to a level that would be considered acceptable,

under section 112(f) of the CAA, the Agency is proposing the exact same emissions limit for anode refining roof vents that the Agency is proposing as a BTF limit for the roof vents in buildings housing anode refining under CAA section 112(d)(2) and (d)(3) (which is described in more detail above in section IV.A.2). This is expected to require additional capture and control systems to reduce process fugitive emissions at the Freeport facility. The estimated emissions at Asarco are considerably lower than at Freeport. Asarco is not expected to have to install additional capture and control systems to comply with the proposed limits for anode refining roof vents, although they would incur costs for emissions testing. For anode refining roof vents, under section 112(f)(2) of the CAA, the Agency is proposing the following risk-based emission limits:

- For existing and new anode refining operations located at primary copper smelting facilities, the Agency is proposing an emissions limit for PM of 1.6 lbs/hr for anode refining roof vents.

With regard to demographic impacts, due to the fact that the EPA is proposing that risks from emissions of air toxics from this major source category are unacceptable at baseline and since EPA is proposing new standards (as described above) which are expected to reduce risks to an acceptable level, EPA performed a post-control demographic analysis to identify how the estimated risks would be distributed among different demographic groups of the populations living within 5 km and within 50 km of the two major source facilities after the additional controls (described above) are in place. The methodology and the results of the post-control demographic analysis are presented in the technical report, *Risk and Technology Review—Analysis of Demographic Factors for Populations Living Near Primary Copper Smelting Post-Control Source Category Operations,* which is available in the docket.

This post-control demographic report indicates that for the major source category as a whole, average cancer risk for demographic groups would decrease as follows as a result of additional capture and control systems at the Freeport facility: Hispanic or Latino (4-in-1 million to 3-in-1 million); Native American (2-in-1 million to 1-in-1 million); African American (10-in-1 million to 5-in-1 million); Other and Multiracial (5-in-1 million to 3-in-1 million); people living below the poverty level (4-in-1 million to 2-in-1 million); people 25 years old and older without a high school diploma (4-in-1 million to 2-in-1 million); and people living in linguistic isolation (4-in-1 million to 2-in-1 million). For the total population exposed to emissions from the source category, average cancer risk would be reduced from 4-in-1 million to 2-in-1 million.

3. Ample Margin of Safety Analysis

After identifying controls that would reduce risk to an acceptable level, the Agency next considered whether additional measures are required to provide an ample margin of safety to protect public health. In the ample margin of safety analysis, the Agency evaluated the cost and feasibility of available control technologies and other measures (such as work practices) that could be applied to the source category to further reduce the risk due to emissions of HAP.

With regard to additional controls considered under the ample margin of safety analysis, as described in section IV.B.1, another emission point contributing significantly to risks at Freeport is the Aisle Scrubber, which is used to control the combination of secondary emissions from the converter plus the emissions exiting the baghouse used to control primary anode refining point source emissions. Therefore, the Agency estimated the costs to install an additional PM control device (*e.g.,* a wet ESP) and the emissions and risks reductions that would be achieved. Based on that analysis, we estimate these controls would have capital costs of $50M and annualized costs of $13M and achieve about 7.6 tpy of metal HAP with cost effectiveness of $1.7M per ton of metal HAP. Based on risk modeling, the Agency estimates the addition of these controls (in addition to the controls for anode roof vent process fugitives described above) would reduce the maximum 3-month ambient lead concentration near Freeport from 0.073 ug/m^3 to 0.024 ug/m^3, the inhalation cancer MIR near Freeport would be reduced from 30 to 20-in-1 million, with 17,350 people exposed to a cancer risk greater than or equal to 1-in-1 million, a 34 percent reduction when compared to cancer risk from actual emissions. The maximum off-site acute HQ would remain the same with an HQ = 2. The additional control options changed the maximum acute off-site location, resulting in a lower potential for exposure. The acute arsenic HQ is based upon an REL, the acute REL represents a health-protective level of exposure, with effects not anticipated below those levels, even for repeated exposures; however, the level of exposure that would cause health effects is not specifically known. As the exposure concentration increases above the acute REL, the potential for effects increases. Based upon an acute HQ value of 2 for arsenic emissions based on the REL, and given the protective nature of the REL (as described previously in this preamble, in section III.C.3.c) and without any additional acute health benchmarks to apply to further characterize the potential for severe or reversible effects it is reasonable to assume that acute health risks from arsenic for this source category would be low.

Given the relatively high estimated capital costs, uncertainties, and moderate risk reductions that would be achieved for populations living near these facilities, the Agency is not proposing these additional controls for the Aisle Scrubber at this time. Nevertheless, the Agency is soliciting comments regarding our analysis (including the costs, costs effectiveness, and risk reductions) and whether the EPA should establish more stringent standards to reduce HAP metal emissions from the Aisle Scrubber.

The EPA also evaluated an option to reduce risks from the Asarco facility. In this case the Agency evaluated the potential to reduce process fugitive HAP metal emissions from the flash smelting furnace roof vents by installing hoods, ducts, fans, and an additional baghouse. Under this option, the Agency estimated capital costs of $19,107,200, annualized costs of $4,244,610, and approximately 1.08 tpy reduction of HAP metals, with cost effectiveness of $3,537,000 per ton of HAP metals. These controls would reduce the modeled inhalation cancer risk for Asarco (primarily due to arsenic emissions) from 60-in-1 million to about 10-in-1 million. These controls would also reduce lead emissions and associated risk from lead exposures from Asarco to some extent. However, given the relatively high estimated capital costs, annualized costs, poor cost effectiveness, uncertainties, and limited risk reductions that would be achieved for populations living near these facilities, we are not proposing these additional controls for the flash smelting furnace at Asarco at this time. Nevertheless, we are soliciting comments regarding our analysis (including the costs, cost effectiveness, and risk reductions) and whether the EPA should establish more stringent standards to reduce HAP metal emissions from the Flash Furnace at Asarco.

In addition to the controls described above, the Agency also evaluated the potential to propose additional work practices to reduce fugitive dust emissions, consistent with Asarco's

current consent decree. The additional work practices the Agency identified include the following:

- Routine cleaning of paved roads with a sweeper, vacuum or wet broom (in accordance with applicable recommendations by the manufacturer of the street sweeper, vacuum, or wet broom), with such cleaning to occur no less frequently than on a daily basis unless the roads have sufficient surface moisture such that fugitive dust is not generated.
- Chemical dust suppressants will be applied not less frequently than once per month at slag haul roads and not less frequently than every 6 weeks on all other unpaved roads unless the roads have sufficient surface moisture such that fugitive dust is not generated.
- Copper concentrate storage, handling, and unloading operations.
- The cargo compartment of all trucks or other motor vehicles (*e.g.,* front-end loaders) when transporting bulk quantities of fugitive dust materials must be maintained to ensure:

(i) The floor, sides, and/or tailgate(s) are free of holes or other openings.

(ii) All loads of trucks containing copper concentrate arriving at the facility are covered with a tarp to prevent spills and fugitive emissions.

(iii) Trucks are loaded only to such a level as to prevent spillage over the side.

(iv) A speed limit of 15 mph is required.

(v) All dust producing material internally transferred or moved by truck at the facility is covered with a tarp to prevent spills and fugitive emissions.

- Revert crushing operations and crushed revert storage.
- Scrubber liquid blowdown drying operations.
- Other site-specific sources of fugitive dust emissions that the Administrator or delegated permitting authority designate to be included in your fugitive dust control plan.
- For any element of the fugitive dust control plan that requires new construction at the facility, the owner or operator shall complete such construction, in accordance with the specifications and schedule set forth in the approved fugitive dust control plan.
- The fugitive dust control plan must be reviewed, updated (if necessary), and then approved by the permitting authority with each application for the Title V operating permit renewal pursuant to part 70 or part 71 of this chapter and with each permit application for the construction or modification of lead-bearing fugitive dust generating sources.

Since the facilities already need to implement most of these work practices per the consent decrees or state air permits, we expect there will be very minimal additional costs if these work practices are also incorporated into the NESHAP. The only additional costs would be a slight increase related to recordkeeping and reporting requirements. Furthermore, the Agency concludes that these additional work practices will achieve unquantified reductions of fugitive dust HAP metal emissions and associated human health risks. Therefore, under CAA section 112(f), as part of our ample margin of safety determination, the Agency is proposing that the facilities will need to develop and implement a more robust fugitive dust plan than currently required by the NESHAP. This plan would require, at a minimum, the specific work practices described above, but also could include other practices identified by the facilities (or the permitting authority to minimize these fugitive dust emissions).

Finally, EPA considered the impact of the proposed standards on the distribution of post-control risks as outlined in the technical report, *Risk and Technology Review—Analysis of Demographic Factors for Populations Living Near Primary Copper Smelting Post-Control Source Category Operations.* The baseline risk analysis indicated the potential for elevated cancer risks associated with emissions from the major source category to disproportionately affect communities with environmental justice concerns, including low-income residents, Native Americans, and Hispanics living near these facilities. EPA also noted that the potential acute risks from arsenic emissions, and the highest estimated exposures due to lead emissions, are associated with the Freeport facility. The post-control analysis indicated that with the addition of controls proposed in this rulemaking, the cancer risks will be reduced from an estimated maximum individual excess cancer risk at Freeport from 80-in-1 million to 30-in-1 million, and noncancer risks will also be reduced significantly, substantially reducing risk among highly exposed individuals and reducing some of the risk disparities identified in the baseline (pre-control) scenario. Furthermore, the maximum modeled excess cancer risk for any person near Asarco is 60-in-1 million. As a result, EPA concludes that the proposed standards provide an ample margin of safety to protect public health and notes that for the major source category as a whole, average cancer risk for each demographic group will be reduced.

In summary, based on our ample margin of safety analysis, we are not proposing additional controls for the combined emissions stream from the anode refining furnace and secondary converter operations or the flash furnaces, as described above. Furthermore, the Agency did not identify any additional controls or measures to further reduce process fugitive emissions from the anode refining roof vents beyond those controls being proposed under the acceptability section (described above). However, the Agency is proposing additional work practices to limit fugitive dust emissions as part of the ample margin of safety analysis. Overall, the Agency proposes that with the additional controls for the anode refining furnace process fugitive roof vents described above (under the acceptability section), and the additional fugitive dust work practice standards being proposed based on our ample margin of safety analysis, the NESHAP will provide an ample margin of safety to protect public health. The acute arsenic HQ of 2 is based upon an REL, the acute REL represents a health-protective level of exposure, with effects not anticipated below those levels, even for repeated exposures; however, the level of exposure that would cause health effects is not specifically known. As the exposure concentration increases above the acute REL, the potential for effects increases. Based upon an acute HQ value of 2 for arsenic emissions, without any additional acute health benchmarks to apply to further characterize the potential for severe or reversible effects it is reasonable to assume that acute health risks from arsenic for this source category would be low.

4. Adverse Environmental Effect

Based on the results of the environmental risk screening analysis, the Agency does not expect an adverse environmental effect as a result of HAP emissions from this source category.

D. What are the results and proposed decisions based on our technology review?

Under the technology review, the EPA searched, reviewed, and considered several sources of information to determine whether there have been developments in practices, processes, and control technologies as required by section 112(d)(6) of the CAA. The EPA researched practices, processes, and control technologies through a literature review to identify advancements in processes and control technologies in the primary copper smelting industry with a view toward identifying ''developments'' in practices, processes,

and control. In conducting the technology review, the Agency examined information in the RBLC to identify technologies in use and determine whether there have been relevant developments in practices, processes, or control technologies. The RBLC is a database that contains case-specific information on air pollution technologies that have been required to reduce the emissions of air pollutants from stationary sources. Potential developments in the industry were discussed with representatives of the primary copper smelting companies. In addition, state permits as well as recent consent decrees or consent orders between the EPA or the ADEQ and primary copper smelters were reviewed to assess control technologies at primary copper smelting plants. To identify developments, the Agency evaluated whether there were improvements in processes and control technologies available at the time the standards were promulgated that could reduce emissions of the regulated pollutants. We also evaluated whether there were processes and control technologies that were not available at the time the standards were promulgated that could reduce emissions of the regulated pollutants.

Concentrate dryers are used at the Kennecott Utah facility and the Asarco Hayden plant. The Freeport-McMoRan Miami smelter uses a wet feed and has no dryer. PM control at the Kennecott dryer consists of a baghouse and a scrubber. PM emissions from the Asarco dryers are controlled using baghouses.

Smelting furnaces at Asarco are controlled by a venturi scrubber followed by a wet gas cleaning system and an acid plant. Process gases from the Kennecott smelting furnace are exhausted to a waste heat boiler and then to an ESP, a wet scrubber, and a wet ESP. The off-gas from the Freeport smelting furnace is routed through a waste heat boiler where entrained dust settles out and is then routed to an ESP.

Matte drying and grinding are performed at the Asarco and Freeport facilities. Emissions are controlled using baghouses.

The two major sources, Asarco and Freeport, use batch converters. Controls include combinations of baghouses, scrubbers, and ESPs. Process gases at the Kennecott continuous converter are exhausted to a waste heat boiler, an ESP, a wet scrubber, and then to a wet ESP.

Slag cleaning emissions at Kennecott are vented to scrubbers. The slag cleaning furnace at Asarco has been decommissioned and the slag is allowed to cool and is sent back for additional processing for additional copper recovery. At the Freeport facility, the slag is sent to an electric furnace, and off-gas from the furnace is cooled with water sprays and then ducted to the acid plant.

Exhaust gases from anode refining furnaces are controlled by baghouses. Secondary gas systems typically exhaust to either a baghouse, a baghouse and a scrubber, or a scrubber and wet ESP.

All three primary copper smelting facilities operate under a fugitive dust control plan. Controls include the use of water sprays, chemical dust suppressants, placing material stockpiles below grade, and installing wind screens or wind fences around the source.

1. 40 CFR Part 63, Subpart QQQ

The current NESHAP for major source primary copper smelting facilities (40 CFR part 63, subpart QQQ) establishes numeric emission limits for PM, a surrogate for metal HAP, for copper concentrate dryers, smelting furnaces, slag cleaning vessels, and existing copper converters. The standard for new converters prohibits batch converters. An opacity limit applies to the converter building during performance testing. A fugitive dust control plan is required for the control of fugitive emissions. This subpart also establishes requirements to demonstrate initial and continuous compliance with all applicable emission limitations, work practice standards, and operation and maintenance requirements in this subpart. The requirements apply to primary copper smelters that are (or are part of) a major source of HAP emissions and that use batch copper converters.

As part of the technology review for the major source category, the Agency identified previously unregulated processes and pollutants, and are regulating them under CAA section 112(d)(2) and (3), as described in section IV.A, above; these new provisions also are being proposed under CAA section 112(f)(2), as described in section IV.C, above. With regard to the emissions sources at major primary copper smelting facilities, including sources of fugitive dust emissions, the Agency did not identify any developments in practices, processes, or control technologies beyond those described under the ample margin of safety analysis above.

2. 40 CFR Part 63, Subpart EEEEEE

The current NESHAP for area source primary copper smelting facility (40 CFR part 63, subpart EEEEEE) establishes numeric emission limits for PM (a surrogate for metal HAP), emitted from copper concentrate dryers, smelting vessels, converting vessels, matte drying and grinding plants, secondary gas systems, and anode refining departments. This subpart also requires work practices to ensure the capture of gases and fumes from the transfer of molten materials and their conveyance to control devices, provisions to monitor PM emissions for initial and continuous compliance, work practice standards, and operation and maintenance. With regard to the emissions sources at the area source primary copper smelting facility, including sources of fugitive dust emissions, the Agency did not identify any developments in practices, processes, or control technologies.

For more details, refer to the document, *Technology Review for the Primary Copper Smelting Source Category,* which is available in Docket ID No. EPA–HQ–OAR–2020–0430.

E. What other actions are we proposing?

In addition to the proposed actions described above, the EPA is proposing additional revisions to the NESHAP. The EPA is proposing revisions to the SSM provisions of the MACT rule in order to ensure that they are consistent with the decision in *Sierra Club* v. *EPA,* 551 F. 3d 1019 (D.C. Cir. 2008), in which the court vacated two provisions that exempted sources from the requirement to comply with otherwise applicable CAA section 112(d) emission standards during periods of SSM. The Agency is proposing various other changes to the NESHAP, including the following: (1) Require electronic reporting of performance test results and notification of compliance reports; (2) revising the applicability under section 63.1441 to clarify that the NESHAP applies to major source smelting facilities that use any type of converter, not just batch converters; (3) revising the testing requirements under section 63.1450 to clarify that facilities must test for filterable particulate, not total particulate, (4) adding test methods for mercury, PM_{10} and fugitive PM and updating test methods that are incorporated by reference; and (5) revising the definitions under section 63.1459 by changing the term ''smelting furnace'' to ''smelting vessel'' to be consistent with the definition in the area source rule, subpart EEEEEE. Our analyses and proposed changes related to these issues are discussed below.

1. SSM

In its 2008 decision in *Sierra Club* v. *EPA,* 551 F.3d 1019 (D.C. Cir. 2008), the court vacated portions of two provisions in the EPA's CAA section 112

regulations governing the emissions of HAP during periods of SSM. Specifically, the court vacated the SSM exemption contained in 40 CFR 63.6(f)(1) and 40 CFR 63.6(h)(1), holding that under section 302(k) of the CAA, emissions standards or limitations must be continuous in nature and that the SSM exemption violates the CAA's requirement that some section 112 standards apply continuously.

The EPA is proposing the elimination of the SSM exemptions in these rules. Consistent with *Sierra Club* v. *EPA,* the Agency is proposing standards in these rules that apply at all times. The Agency is also proposing several revisions to Table 1 to subpart QQQ and Table 1 to subpart EEEEEE (the General Provisions Applicability Tables) as is explained in more detail below. For example, the Agency is proposing to eliminate the incorporation of the General Provisions' requirement that the source develop an SSM plan. The EPA is also proposing to eliminate and revise certain recordkeeping and reporting requirements related to the SSM exemption as further described below.

The EPA has attempted to ensure that the provisions the Agency is proposing to eliminate are inappropriate, unnecessary, or redundant in the absence of the SSM exemption. The EPA specifically is seeking comments on whether the Agency has successfully done so.

In proposing the standards in these rules, the EPA has considered startup and shutdown periods and, for the reasons explained below, is not proposing alternative standards for those periods. The associated control devices are operational before startup and during shutdown of the affected sources at primary copper smelting facilities. Therefore, we expect that emissions during startup and shutdown would be no higher than emissions during normal operations. We know of no reason why the existing standards should not apply at all times.

Periods of startup, normal operations, and shutdown are all predictable and routine aspects of a source's operations. Malfunctions, in contrast, are neither predictable nor routine. Instead they are, by definition, sudden, infrequent, and not reasonably preventable failures of emissions control, process, or monitoring equipment. (40 CFR 63.2) (Definition of malfunction). The EPA interprets CAA section 112 as not requiring emissions that occur during periods of malfunction to be factored into development of CAA section 112 standards and this reading has been upheld as reasonable by the court in *U.S. Sugar Corp.* v. *EPA,* 830 F.3d 579, 606–610 (2016). Under CAA section 112, emissions standards for new sources must be no less stringent than the level ''achieved'' by the best controlled similar source and for existing sources generally must be no less stringent than the average emission limitation ''achieved'' by the best performing 12 percent of sources in the category. There is nothing in CAA section 112 that directs the Agency to consider malfunctions in determining the level ''achieved'' by the best performing sources when setting emission standards. As the court has recognized, the phrase ''average emissions limitation achieved by the best performing 12 percent of'' sources ''says nothing about how the performance of the best units is to be calculated.'' *Nat'l Ass'n of Clean Water Agencies* v. *EPA,* 734 F.3d 1115, 1141 (D.C. Cir. 2013). While the EPA accounts for variability in setting emissions standards, nothing in CAA section 112 requires the Agency to consider malfunctions as part of that analysis. The EPA is not required to treat a malfunction in the same manner as the type of variation in performance that occurs during routine operations of a source. A malfunction is a failure of the source to perform in a ''normal or usual manner'' and no statutory language compels the EPA to consider such events in setting CAA section 112 standards.

Similarly, although standards for area sources are not required to be set based on ''best performers,'' the EPA is not required to consider malfunctions in determining what is ''generally available.''

As the court recognized in *U.S. Sugar Corp,* accounting for malfunctions in setting standards would be difficult, if not impossible, given the myriad different types of malfunctions that can occur across all sources in the category and given the difficulties associated with predicting or accounting for the frequency, degree, and duration of various malfunctions that might occur. *Id.* at 608 (''the EPA would have to conceive of a standard that could apply equally to the wide range of possible boiler malfunctions, ranging from an explosion to minor mechanical defects. Any possible standard is likely to be hopelessly generic to govern such a wide array of circumstances.''). As such, the performance of units that are malfunctioning is not ''reasonably'' foreseeable. See, *e.g., Sierra Club* v. *EPA,* 167 F.3d 658, 662 (D.C. Cir. 1999) (''The EPA typically has wide latitude in determining the extent of data-gathering necessary to solve a problem. The EPA generally defers to an agency's decision to proceed on the basis of imperfect scientific information, rather than to 'invest the resources to conduct the perfect study.' ''). See also, *Weyerhaeuser* v. *Costle,* 590 F.2d 1011, 1058 (D.C. Cir. 1978) (''In the nature of things, no general limit, individual permit, or even any upset provision can anticipate all upset situations. After a certain point, the transgression of regulatory limits caused by 'uncontrollable acts of third parties,' such as strikes, sabotage, operator intoxication or insanity, and a variety of other eventualities, must be a matter for the administrative exercise of case-by-case enforcement discretion, not for specification in advance by regulation.''). In addition, emissions during a malfunction event can be significantly higher than emissions at any other time of source operation. For example, if an air pollution control device with 99 percent removal goes off-line as a result of a malfunction (as might happen if, for example, the bags in a baghouse catch fire) and the emission unit is a steady state type unit that would take days to shut down, the source would go from 99 percent control to zero control until the control device was repaired. The source's emissions during the malfunction would be 100 times higher than during normal operations. As such, the emissions over a 4-day malfunction period would exceed the annual emissions of the source during normal operations. As this example illustrates, accounting for malfunctions could lead to standards that are not reflective of (and significantly less stringent than) levels that are achieved by a well-performing non-malfunctioning source. It is reasonable to interpret CAA section 112 to avoid such a result. The EPA's approach to malfunctions is consistent with CAA section 112 and is a reasonable interpretation of the statute.

Although no statutory language compels the EPA to set standards for malfunctions, the EPA has the discretion to do so where feasible. For example, in the Petroleum Refinery Sector Risk and Technology Review, the EPA established a work practice standard for unique types of malfunction that result in releases from pressure relief devises (PRDs) or emergency flaring events because the EPA had information to determine that such work practices reflected the level of control that applies to the best performers. 80 FR 75178, 75211–14 (Dec. 1, 2015). The EPA will consider whether circumstances warrant setting standards for a particular type of malfunction and, if so, whether the EPA

has sufficient information to identify the relevant best performing sources and establish a standard for such malfunctions. The Agency also encourages commenters to provide any such information.

Based on the EPA's knowledge of the processes and engineering judgment, malfunctions in the Primary Copper Smelting source category are considered unlikely to result in a violation of the standard. Affected sources at primary copper smelting plants are controlled with add-on air pollution control devices which will continue to function in the event of a process upset. Also, processes in the industry are typically equipped with controls that will not allow startup of the emission source until the associated control device is operating and will shut down the emission source if the associated controls malfunction. Furnaces used in primary copper smelting, which are the largest sources of HAP emissions, typically operate continuously for long periods of time with no significant spikes in emissions. These minimal fluctuations in emissions are controlled by the existing add-on air pollution control devices used at all plants in the industry.

In the unlikely event that a source fails to comply with the applicable CAA section 112(d) standards as a result of a malfunction event, the EPA would determine an appropriate response based on, among other things, the good faith efforts of the source to minimize emissions during malfunction periods, including preventative and corrective actions, as well as root cause analyses to ascertain and rectify excess emissions. The EPA would also consider whether the source's failure to comply with the CAA section 112(d) standard was, in fact, sudden, infrequent, not reasonably preventable, and was not instead caused, in part, by poor maintenance or careless operation. 40 CFR 63.2 (Definition of malfunction).

If the EPA determines in a particular case that an enforcement action against a source for violation of an emission standard is warranted, the source can raise any and all defenses in that enforcement action and the federal district court will determine what, if any, relief is appropriate. The same is true for citizen enforcement actions. Similarly, the presiding officer in an administrative proceeding can consider any defense raised and determine whether administrative penalties are appropriate.

In summary, the EPA interpretation of the CAA, particularly section 112, is reasonable and encourages practices that will avoid malfunctions. Administrative and judicial procedures for addressing exceedances of the standards fully recognize that violations may occur despite good faith efforts to comply and can accommodate those situations. *U.S. Sugar Corp.* v. *EPA,* 830 F.3d 579, 606–610 (2016).

The EPA is proposing to revise the General Provisions table (Table 1 to subpart QQQ and Table 1 to subpart EEEEEE) entry for 40 CFR 63.6(e)(1)(i) by changing the ''yes'' in the column titled ''Applies to Subpart QQQ'' and in the column titled ''Applies to Subpart EEEEEE'' to a ''no.'' Section 63.6(e)(1)(i) describes the general duty to minimize emissions. Some of the language in that section is no longer necessary or appropriate in light of the elimination of the SSM exemption. The Agency is proposing instead to add general duty regulatory text at 40 CFR 63.1447(a) (subpart QQQ) that reflects the general duty to minimize emissions while eliminating the reference to periods covered by an SSM exemption. The general duty to minimize emissions at existing area sources (subpart EEEEEE), including periods of SSM, are contained in sections 63.11147(c) and 63.11148(f). The general duty to minimize emissions at new sources are being proposed in 63.11149(c)(3). The current language in 40 CFR 63.6(e)(1)(i) characterizes what the general duty entails during periods of SSM. With the elimination of the SSM exemption, there is no need to differentiate between normal operations, startup and shutdown, and malfunction events in describing the general duty. Therefore, the language the EPA is proposing for subpart QQQ and subpart EEEEEE do not include that language from 40 CFR 63.6(e)(1).

The EPA is also proposing to revise the General Provisions table (Table 1 to subpart QQQ and Table 1 to subpart EEEEEE) entry for 40 CFR 63.6(e)(1)(ii) by changing the ''yes'' in the column titled ''Applies to Subpart QQQ'' and in the column titled ''Applies to Subpart EEEEEE'' to a ''no.'' Section 63.6(e)(1)(ii) imposes requirements that are not necessary with the elimination of the SSM exemption or are redundant with the general duty requirement being added at 40 CFR 63.1447(a) (subpart QQQ) and that are already required for existing sources in 40 CFR 63.11147(c) and 63.11148(f) and are proposed for new sources in 63.11149(c)(3).

The EPA is proposing to revise the General Provisions table (Table 1 to subpart QQQ and Table 1 to subpart EEEEEE) entry for 40 CFR 63.6(e)(3) by changing the ''yes'' in the column titled ''Applies to Subpart QQQ'' and in the column titled ''Applies to Subpart EEEEEE'' to a ''no.'' Generally, these paragraphs require development of an SSM plan and specify SSM recordkeeping and reporting requirements related to the SSM plan. As noted, the EPA is proposing to remove the SSM exemptions. Therefore, affected units will be subject to an emission standard during such events. The applicability of a standard during such events will ensure that sources have ample incentive to plan for and achieve compliance and, thus, the SSM plan requirements are no longer necessary.

The EPA is proposing to revise the General Provisions table (Table 1 to subpart QQQ and Table 1 to subpart EEEEEE) entry for 40 CFR 63.6(f)(1) by changing the ''yes'' in the column titled ''Applies to Subpart QQQ'' and in the column titled ''Applies to Subpart EEEEEE'' to a ''no.'' The current language of 40 CFR 63.6(f)(1) exempts sources from non-opacity standards during periods of SSM. As discussed above, the court in *Sierra Club* v. *EPA* vacated the exemptions contained in this provision and held that the CAA requires that some CAA section 112 standards apply continuously. Consistent with *Sierra Club* v. *EPA,* the EPA is proposing to revise standards in these rules to apply at all times.

The EPA is proposing to revise the General Provisions table (Table 1 to subpart EEEEEE) entry for 40 CFR 63.6(h)(1) by changing the ''yes'' in the column titled ''Applies to Subpart EEEEEE'' to a ''no.'' The entry for 40 CFR 63.6(h) in Table 1 to subpart QQQ is already a ''no.' The current language of 40 CFR 63.6(h)(1) exempts sources from opacity standards during periods of SSM. As discussed above, the court in *Sierra Club* vacated the exemptions contained in this provision and held that the CAA requires that some CAA section 112 standard apply continuously. Consistent with *Sierra Club,* the EPA is proposing to revise standards in this rule to apply at all times.

The EPA is proposing to revise the General Provisions table (Table 1 to subpart QQQ and Table 1 to subpart EEEEEE) entry for 40 CFR 63.7(e)(1) by changing the ''yes'' in the column titled ''Applies to Subpart QQQ'' and in the column titled ''Applies to Subpart EEEEEE'' to a ''no.'' Section 63.7(e)(1) describes performance testing requirements. The EPA is instead proposing to add a performance testing requirement at 40 CFR 63.1450(a) and (b) (subpart QQQ) and 63.11148(e)(3) (subpart EEEEEE). The performance testing requirements the Agency is proposing to add differ from the General Provisions performance testing

provisions in several respects. The regulatory text does not include the language in 40 CFR 63.7(e)(1) that restated the SSM exemption and language that precluded startup and shutdown periods from being considered ''representative'' for purposes of performance testing. As in 40 CFR 63.7(e)(1), performance tests conducted under this subpart should not be conducted during malfunctions because conditions during malfunctions are often not representative of normal operating conditions. The EPA is proposing to add language that requires the owner or operator to record the process information that is necessary to document operating conditions during the test and include in such record an explanation to support that such conditions represent normal operation. Section 63.7(e) requires that the owner or operator make such records ''as may be necessary to determine the condition of the performance test'' available to the Administrator upon request but does not specifically require the information to be recorded. The regulatory text the EPA is proposing to add to these provisions builds on that requirement and makes explicit the requirement to record the information.

The EPA is proposing to revise the General Provisions table (Table 1 to subpart QQQ and Table 1 to subpart EEEEEE) entry for 40 CFR 63.8(c)(1)(i) and (iii) by changing the ''yes'' in the column titled ''Applies to Subpart QQQ'' and in the column titled ''Applies to Subpart EEEEEE'' to a ''no.'' The cross-references to the general duty and SSM plan requirements in those subparagraphs are not necessary in light of other requirements of 40 CFR 63.8 that require good air pollution control practices (40 CFR 63.8(c)(1)) and that set out the requirements of a quality control program for monitoring equipment (40 CFR 63.8(d)).

The EPA is proposing to revise the General Provisions table (Table 1 to subpart QQQ and Table 1 to subpart EEEEEE) entry for 40 CFR 63.8(d)(3) by changing the ''yes'' in the column titled ''Applies to Subpart QQQ'' and in the column titled ''Applies to Subpart EEEEEE'' to a ''no.'' The final sentence in 40 CFR 63.8(d)(3) refers to the General Provisions' SSM plan requirement which is no longer applicable. The EPA is proposing to add to the rules at 40 CFR 63.1456(a)(4)(iii) in subpart QQQ and 63.11149(b)(3) in subpart EEEEEE text that is identical to 40 CFR 63.8(d)(3) except that the final sentence is replaced with the following sentence: ''The program of corrective action should be included in the plan required under § 63.8(d)(2).''

The EPA is proposing to revise the General Provisions table (Table 1 to subpart QQQ and Table 1 to subpart EEEEEE) entry for 40 CFR 63.10(b)(2)(i) by changing the ''yes'' in the column titled ''Applies to Subpart QQQ'' and in the column titled ''Applies to Subpart EEEEEE'' to a ''no.'' Section 63.10(b)(2)(i) describes the recordkeeping requirements during startup and shutdown. These recording provisions are no longer necessary because the EPA is proposing that recordkeeping and reporting applicable to normal operations will apply to startup and shutdown. In the absence of special provisions applicable to startup and shutdown, such as a startup and shutdown plan, there is no reason to retain additional recordkeeping for startup and shutdown periods.

The EPA is proposing to revise the General Provisions table (Table 1 to subpart QQQ and Table 1 to subpart EEEEEE) entry for 40 CFR 63.10(b)(2)(ii) by changing the ''yes'' in the column titled ''Applies to Subpart QQQ'' and in the column titled ''Applies to Subpart EEEEEE'' to a ''no.'' Section 63.10(b)(2)(ii) describes the recordkeeping requirements during a malfunction. The EPA is proposing to add such requirements to 40 CFR 63.1456 (subpart QQQ) and 40 CFR 63.11149(g) (subpart EEEEEE). The regulatory text the Agency is proposing to add differs from the General Provisions it is replacing in that the General Provisions requires the creation and retention of a record of the occurrence and duration of each malfunction of process, air pollution control, and monitoring equipment. The EPA is proposing that this requirement apply to any failure to meet an applicable standard and is requiring that the source record the date, time, and duration of the failure rather than the ''occurrence.'' The EPA is also proposing to add a requirement that sources keep records that include a list of the affected source or equipment and actions taken to minimize emissions, an estimate of the quantity of each regulated pollutant emitted over the standard for which the source failed to meet the standard, and a description of the method used to estimate the emissions. Examples of such methods would include product-loss calculations, mass balance calculations, measurements when available, or engineering judgment based on known process parameters. The EPA is proposing to require that sources keep records of this information to ensure that there is adequate information to allow the EPA to determine the severity of any failure to meet a standard, and to provide data that may document how the source met the general duty to minimize emissions when the source has failed to meet an applicable standard.

The EPA is proposing to revise the General Provisions table (Table 1 to subpart QQQ and Table 1 to subpart EEEEEE) entry for 40 CFR 63.10(b)(2)(iv) by changing the ''yes'' in the column titled ''Applies to Subpart QQQ'' and in the column titled ''Applies to Subpart EEEEEE'' to a ''no.'' When applicable, the provision requires sources to record actions taken during SSM events when actions were inconsistent with their SSM plan. The requirement is no longer appropriate because SSM plans will no longer be required. The requirement previously applicable under 40 CFR 63.10(b)(2)(iv)(B) to record actions to minimize emissions and record corrective actions is now applicable by reference to 40 CFR 63.1456 (subpart QQQ) and 40 CFR 63.11149.

The EPA is proposing to revise the General Provisions table (Table 1 to subpart QQQ and Table 1 to subpart EEEEEE) entry for 40 CFR 63.10(b)(2)(v) by changing the ''yes'' in the column titled ''Applies to Subpart QQQ'' and in the column titled ''Applies to Subpart EEEEEE'' to a ''no.'' When applicable, the provision requires sources to record actions taken during SSM events to show that actions taken were consistent with their SSM plan. The requirement is no longer appropriate because SSM plans will no longer be required.

The EPA is proposing to revise the General Provisions table (Table 1 to subpart QQQ and Table 1 to subpart EEEEEE) entry for 40 CFR 63.10(c)(15) by changing the ''yes'' in the column titled ''Applies to Subpart QQQ'' and in the column titled ''Applies to Subpart EEEEEE'' to a ''no.'' The EPA is proposing that 40 CFR 63.10(c)(15) no longer apply. When applicable, the provision allows an owner or operator to use the affected source's SSM plan or records kept to satisfy the recordkeeping requirements of the SSM plan, specified in 40 CFR 63.6(e), to also satisfy the requirements of 40 CFR 63.10(c)(10) through (12). The EPA is proposing to eliminate this requirement because SSM plans would no longer be required, and therefore 40 CFR 63.10(c)(15) no longer serves any useful purpose for affected units.

The EPA is proposing to revise the General Provisions table (Table 1 to subpart QQQ and Table 1 to subpart EEEEEE) entry for 40 CFR 63.10(d)(5) by changing the ''yes'' in the column titled ''Applies to Subpart QQQ'' and in the column titled ''Applies to Subpart

EEEEEE'' to a ''no.'' Section 63.10(d)(5) describes the reporting requirements for SSM. To replace the General Provisions reporting requirement, the EPA is proposing to add reporting requirements to 40 CFR 63.1455 (subpart QQQ) and 40 CFR 63.11147, 63.11148, and 63.11149 (subpart EEEEEE). The replacement language differs from the General Provisions requirement in that it eliminates periodic SSM reports as a stand-alone report. The Agency is proposing language that requires sources that fail to meet an applicable standard at any time to report the information concerning such events in the semi-annual or other reporting period deviation or excess emission report already required under these rules. The Agency is proposing that the report must contain the number, date, time, duration, and the cause of such events (including unknown cause, if applicable), a list of the affected sources or equipment, an estimate of the quantity of each regulated pollutant emitted over any emission limit, and a description of the method used to estimate the emissions.

Examples of such methods would include product-loss calculations, mass balance calculations, measurements when available, or engineering judgment based on known process parameters. The EPA is proposing this requirement to ensure that there is adequate information to determine compliance, to allow the EPA to determine the severity of the failure to meet an applicable standard, and to provide data that may document how the source met the general duty to minimize emissions during a failure to meet an applicable standard.

The EPA will no longer require owners or operators to determine whether actions taken to correct a malfunction are consistent with an SSM plan, because plans would no longer be required. The proposed amendments therefore eliminate any cross reference to 40 CFR 63.10(d)(5)(i) that contains the description of the previously required SSM report format and submittal schedule from this section. These specifications are no longer necessary because the events will be reported in otherwise required reports with similar format and submittal requirements.

2. Electronic Reporting

The EPA is proposing that owners and operators of Primary Copper Smelting facilities submit electronic copies of required performance test reports, through the EPA's Central Data Exchange (CDX) using the Compliance and Emissions Data Reporting Interface (CEDRI). A description of the electronic data submission process is provided in the memorandum *Electronic Reporting Requirements for New Source Performance Standards (NSPS) and National Emission Standards for Hazardous Air Pollutants (NESHAP) Rules,* available in the docket for this action. The proposed rule requires that performance test results collected using test methods that are supported by the EPA's Electronic Reporting Tool (ERT) as listed on the ERT website at the time of the test be submitted in the format generated through the use of the ERT or an electronic file consistent with the xml schema on the ERT website, and other performance test results be submitted in portable document format (PDF) using the attachment module of the ERT. Similarly, performance evaluation results of continuous emissions monitoring systems (CEMS) measuring relative accuracy test audit (RATA) pollutants that are supported by the ERT at the time of the test must be submitted in the format generated through the use of the ERT or an electronic file consistent with the xml schema on the ERT website, and other performance evaluation results be submitted in PDF using the attachment module of the ERT.

Additionally, the EPA has identified two broad circumstances in which electronic reporting extensions may be provided. These circumstances are (1) outages of the EPA's CDX or CEDRI, which preclude an owner or operator from accessing the system and submitting required reports, and (2) force majeure events, which are defined as events that will be or have been caused by circumstances beyond the control of the affected facility, its contractors, or any entity controlled by the affected facility that prevent an owner or operator from complying with the requirement to submit a report electronically. Examples of force majeure events are acts of nature, acts of war or terrorism, or equipment failure or safety hazards beyond the control of the facility. The EPA is providing these potential extensions to protect owners and operators from noncompliance in cases where they cannot successfully submit a report by the reporting deadline for reasons outside of their control. In both circumstances, the decision to accept the claim of needing additional time to report is within the discretion of the Administrator, and reporting should occur as soon as possible.

The electronic submittal of the reports addressed in this proposed rulemaking will increase the usefulness of the data contained in those reports, is in keeping with current trends in data availability and transparency, will further assist in the protection of public health and the environment, will improve compliance by facilitating the ability of regulated facilities to demonstrate compliance with requirements and by facilitating the ability of delegated state, local, tribal, and territorial air agencies and the EPA to assess and determine compliance, and will ultimately reduce burden on regulated facilities, delegated air agencies, and the EPA. Electronic reporting also eliminates paper-based, manual processes, thereby saving time and resources, simplifying data entry, eliminating redundancies, minimizing data reporting errors, and providing data quickly and accurately to the affected facilities, air agencies, the EPA, and the public. Moreover, electronic reporting is consistent with the EPA's plan to implement Executive Order 13563 and is in keeping with the EPA's agency-wide policy developed in response to the White House's Digital Government Strategy. For more information on the benefits of electronic reporting, see the memorandum *Electronic Reporting Requirements for New Source Performance Standards (NSPS) and National Emission Standards for Hazardous Air Pollutants (NESHAP) Rules,* referenced earlier in this section.

3. Other Changes

As mentioned above, we are also proposing four minor changes to major source NESHAP to clarify an applicability provision, update and clarify the testing requirements for PM, add a test method for mercury, and revise a definition. These changes are explained further in the following paragraphs.

The EPA is proposing to revise the applicability description under section 63.1441 to clarify that the NESHAP applies to major source smelting facilities that use any type of converter, not just batch converters because the current definition limits applicability to only major sources that use batch converters. The major source NESHAP should apply to any Primary Copper major source regardless of what type of converter they use. Therefore, we are proposing this change.

With regard to revisions to testing requirements, the Agency is proposing to revise the wording in section 63.1450 for clarification that the facilities must test for filterable particulate, not total particulate. The test methods in 63.1450(a) have not changed for PM from the existing regulation. The methods in the existing regulation (Methods 5, 5D, and 17) are methods for filterable PM. Total PM includes

filterable PM and condensable PM. The condensable PM test method (Method 202) is not included in the existing regulation for the emission standards set in 2002. In addition, the Agency is proposing to add the appropriate test methods for mercury, PM_{10} and fugitive PM and updating test methods that are incorporated by reference because the affected facilities will need to know what test methods they need to use to demonstrate compliance with the new standards.

Finally, the EPA is proposing to revise the definitions under section 63.1459 by changing the term ''smelting furnace'' to ''smelting vessel'' to be consistent with the definition in the area source rule, subpart EEEEEE because we think it is appropriate that both rules include the broader definition of smelting vessel, which is already in the area source rule. The specific definition is as follows: Smelting vessel means a furnace, reactor, or other type of vessel in which copper ore concentrate and fluxes are smelted to form a molten mass of material containing copper matte and slag. Other copper-bearing materials may also be charged to the smelting vessel.

F. What compliance dates are we proposing?

The EPA is proposing that existing facilities must comply with the BTF PM limits for the anode refining process fugitive roof vents within 2 years after promulgation of the final rule. The EPA is proposing 2 years for compliance because we expect the facility will need this much time to design and construct the necessary capture and control equipment described above. The reason the Agency is not proposing more than 2 years is because these controls are needed to achieve acceptable risks pursuant to CAA section 112(f), and section 112(f) only allows up to 2 years to comply with standards promulgated pursuant section 112(f).

For the new facility-wide mercury limits, new PM limits for anode refining point sources, and new PM limits for converter and smelting furnace roof vents, the Agency is proposing that existing facilities must comply within 1 year after promulgation of the final rule. For all other changes proposed in this action the Agency is proposing that existing facilities must comply within 180 days after promulgation of the final rule. All new or reconstructed facilities must comply with all requirements in the final rule upon startup. Our experience with similar industries that are required to convert reporting mechanisms, install necessary hardware and software, become familiar with the process of submitting performance test results electronically through the EPA's CEDRI, test these new electronic submission capabilities, reliably employ electronic reporting, and convert logistics of reporting processes to different time-reporting parameters shows that a time period of a minimum of 90 days, but more typically 180 days, is generally necessary to successfully complete these changes. Our experience with similar industries further shows that this sort of regulated facility generally requires a time period of 180 days to read and understand the amended rule requirements, evaluate their operations to ensure that they can meet the standards during periods of startup and shutdown as defined in the rule and make any necessary adjustments, adjust parameter monitoring and recording systems to accommodate revisions, and update their operations to reflect the revised requirements.

From our assessment of the time frame needed for compliance with the revised requirements, the EPA considers the periods of 2 years, 1 year, and 180 days to be the most expeditious compliance period practicable for each of the standards described above, respectively, and, thus, is proposing that existing affected sources be in compliance with all of this regulation's revised requirements within these timeframes.

For the MACT floor PM limit, the EPA is proposing in the subpart QQQ rule for anode refining point sources, we are proposing a compliance period of 1 year. Although this is a new requirement, the major source facilities are currently meeting the limit and the Agency expects minimal impact.

For the proposed BTF limit for mercury for existing sources in subpart QQQ, the Agency is proposing a compliance period of 3 years. The EPA is providing 3 years to comply with the mercury standard because the facilities need time to hire a consultant to design the new control systems, establish contracts with construction companies and/or air pollution control installation experts to reconfigure equipment, and build and install new duct work, fans, and control systems. The facilities also need time to establish contracts with testing companies and arrange for and conduct the performance testing.

For affected facilities that commence construction or reconstruction after January 11, 2022, owners or operators must comply with all requirements of the subpart, including all the amendments being proposed, no later than the effective date of the final rule or upon startup, whichever is later.

For the proposed subpart QQQ PM standard for new converters, the Agency is proposing that all new or reconstructed facilities must comply with this requirement upon startup. As no new converters are expected to come online in the near future, the Agency does not expect there to be an issue with the proposed compliance period.

V. Summary of Cost, Environmental, and Economic Impacts

A. What are the affected sources?

The Primary Copper Smelting source category includes any facility that uses a pyrometallurgical process to extract copper from copper sulfide ore concentrates, native ore concentrates, or other copper bearing minerals. There are currently three copper smelting facilities in the United States: Two are major sources and one is an area source. No new copper smelting facilities are currently being constructed or are planned in the near future.

1. 40 CFR Part 63, Subpart QQQ

The affected sources subject to 40 CFR part 63, subpart QQQ, the major source NESHAP, are copper concentrate dryers, smelting furnaces, slag cleaning vessels, copper converter departments, and fugitive emission sources.

2. 40 CFR Part 63, Subpart EEEEEE

Under 40 CFR part 63, subpart EEEEEE, the area source NESHAP, the affected sources are copper concentrate dryers, smelting vessels, converting vessels, matte drying and grinding plant, secondary gas systems, anode refining furnaces, and anode shaft furnaces.

B. What are the air quality impacts?

1. 40 CFR Part 63, Subpart QQQ

The proposed amendments in this action would achieve about 4.26 tpy reduction of HAP metals emissions (primarily lead, arsenic and cadmium from anode refining operations and mercury from furnaces and converters). In this action, the Agency is also proposing additional work practices that the Agency thinks will achieve some additional unquantified HAP emissions reductions. These proposed amendments will also reduce risks to public health and the environment, as described above in this preamble.

Furthermore, the Agency is proposing new standards for process fugitive PM emissions from furnaces and converters. The EPA does not expect to achieve reductions in emissions with these new standards. However, these standards will ensure that the emissions remain controlled and minimized moving

forward. The proposed amendments also include removal of the SSM exemptions.

2. 40 CFR Part 63, Subpart EEEEEE

There are no air quality impacts resulting from the proposed amendments under 40 CFR part 63, subpart EEEEEE.

C. What are the cost impacts?

1. 40 CFR Part 63, Subpart QQQ

As described above, the proposed standards for anode refining process fugitive emissions and BTF standard for mercury will require estimated capital costs of $7,331,000 and annualized costs of $2,299,000 for the Freeport facility (2019 dollars). The Asarco facility will incur estimated costs of about $95,000 per year to complete compliance testing for all the proposed emissions standards. Freeport already conducts annual testing of these units pursuant to state ADEQ requirements; therefore, the Agency does not expect Freeport to incur new testing costs. With regard to the proposed electronic reporting requirements, which will eliminate paper-based manual processes, the EPA expects a small initial unquantified cost to transition to electronic reporting, but that these costs will be offset with savings over time such that ultimately there will be an unquantified reduction in costs to the affected facilities.

2. 40 CFR Part 63, Subpart EEEEEE

With regard to the proposed electronic reporting requirements, which will eliminate paper-based manual processes, the EPA expects a small initial unquantified cost to transition to electronic reporting, but that these costs will be offset with savings over time such that ultimately there will be an unquantified reduction in costs to the affected facilities.

D. What are the economic impacts?

1. 40 CFR Part 63, Subpart QQQ

The net present value of the estimated cost impacts of the proposed revisions to the Primary Copper Smelting NESHAP is $18.2 million, discounted at a 7 percent rate over an 8-year analytic time frame from 2022 to 2029 in 2019 dollars. Using a 3 percent discount rate, the net present value of the estimated cost impacts is $19.6 million.

As described previously in this preamble, the Agency estimates the new standards for anode refining fugitive emissions and mercury will result in annualized costs of about $2.3 million for the Freeport facility. Based on our research, the estimated annualized costs for Freeport are about 0.016 percent of the annual revenue of the facility's ultimate parent company in 2019. For the Asarco facility, the estimated annualized costs of the proposed rule (*i.e.,* $95,000 in testing costs) were less than 0.01 percent of 2019 revenues for the facility's ultimate parent company. Financial data was not available for the individual facilities.

We have data which estimates that the amount of copper produced by U.S. smelters was 563,000 metric tons in 2016 and 315,000 metric tons in 2020.[33] This decrease may have been in part due to the fact that Asarco's smelting operation was shut down for the entire year of 2020 and could have been further impacted by labor and supply issues related to COVID–19. We are not able to determine exactly how much the three U.S. facilities produced individually or the share of the domestic market they represent. Furthermore, we do not have the detailed information needed to determine what percentage of the copper consumed in the U.S. comes from these facilities as opposed to being imported, how much of the production of these facilities is exported, or what the market impacts would be.

The economic impacts of this proposed rule were determined by comparing the annualized costs estimated for each facility to the annual revenues of the facility's ultimate parent company to obtain cost to sales ratios. This is EPA's typical method for determining economic impacts, because parent companies are assumed to be able to shift resources across their operations to address regulatory compliance needs. Since the estimated cost impacts for the facilities' ultimate parent companies are minimal, EPA anticipates there to be no significant economic impacts on the individual facilities due to the proposed revisions.

2. 40 CFR Part 63, Subpart EEEEEE

There are no significant economic impacts anticipated due to the proposed revisions under 40 CFR part 63, subpart EEEEEE.

E. What are the benefits?

1. 40 CFR Part 63, Subpart QQQ

As described above, the proposed amendments would result in significant reductions in emissions of HAP metals, especially lead and arsenic. The proposed amendments also revise the standards such that they apply at all times, which includes SSM periods. Furthermore, the proposed requirements to submit reports and test results electronically will improve monitoring, compliance, and implementation of the rule.

2. 40 CFR Part 63, Subpart EEEEEE

The proposed amendments under 40 CFR part 63, subpart EEEEEE revise the standards such that they apply at all times, which includes SSM periods. Furthermore, the proposed requirements to submit reports and test results electronically will improve monitoring, compliance, and implementation of the rule.

VI. Request for Comments

The EPA solicits comments on this proposed action. In addition to general comments on this proposed action, the Agency is also interested in additional data that may improve the emissions estimates, risk assessments, control and cost impacts analyses, and other analyses. The EPA is specifically interested in receiving any improvements to the data used in the site-specific emissions profiles used for risk modeling. Such data should include supporting documentation in sufficient detail to allow characterization of the quality and representativeness of the data or information. Section VII of this preamble provides more information on submitting data. The EPA is also specifically interested in receiving comments and data on the economic impacts of the proposed rule changes to individual facilities.

VII. Submitting Data Corrections

The site-specific emissions profiles used in the source category risk and demographic analyses and instructions are available for download on the RTR website at *https://www.epa.gov/stationary-sources-air-pollution/primary-copper-smelting-national-emissions-standards-hazardous-air.* The data files include detailed information for each HAP emissions release point for the facilities in the source category.

If you believe that the data are not representative or are inaccurate, please identify the data in question, provide your reason for concern, and provide any ''improved'' data that you have, if available. When you submit data, the Agency requests that you provide documentation of the basis for the revised values to support your suggested changes. To submit comments on the data downloaded from the RTR website, complete the following steps:

1. Within this downloaded file, enter suggested revisions to the data fields appropriate for that information.

[33] *USGS National Minerals Information Center—Copper Statistics and Information* available at: *https://www.usgs.gov/centers/nmic/copper-statistics-and-information*

2. Fill in the commenter information fields for each suggested revision (*i.e.,* commenter name, commenter organization, commenter email address, commenter phone number, and revision comments).

3. Gather documentation for any suggested emissions revisions (*e.g.,* performance test reports, material balance calculations).

4. Send the entire downloaded file with suggested revisions in Microsoft® Access format and all accompanying documentation to Docket ID No. EPA–HQ–OAR–2020–0430 (through the method described in the **ADDRESSES** section of this preamble).

5. If you are providing comments on a single facility or multiple facilities, you need only submit one file for all facilities. The file should contain all suggested changes for all sources at that facility (or facilities). The Agency requests that all data revision comments be submitted in the form of updated Microsoft® Excel files that are generated by the Microsoft® Access file. These files are provided on the project website at *https://www.epa.gov/stationary-sources-air-pollution/primary-copper-smelting-national-emissions-standards-hazardous-air.*

VIII. Incorporation by Reference

The EPA proposes to amend 40 CFR 63.14 to incorporate by reference for three VCS.

- ANSI/ASME PTC 19.10–1981, Flue and Exhaust Gas Analysis [Part 10, Instruments and Apparatus], issued August 31, 1981, IBR requested for 40 CFR 63.1450(a)(iii), (b)(iii), (d)(iii), and (e)(iii). This method is an approved alternative to EPA Method 3B manual portion only, not the instrumental portion. The applicable portion of this Performance Test Code is the wet chemical manual procedures, apparatus and calculations for quantitatively determining oxygen, carbon dioxide, carbon monoxide and nitrogen from stationary combustion sources.
- ASTM D7520–16, Standard Test Method for Determining the Opacity of a Plume in the Outdoor Ambient Atmosphere, approved April 1, 2016, IBR requested for 40 CFR 63.1450(e)(1)(vii). This method is an acceptable alternative to the EPA's Method 9 under specific conditions stated in 40 CFR 63.1450(e)(1)(vii). This test method described the procedures to use the Digital Camera Opacity Techniques (DCOT) to obtain and interpret the digital images in determining and reporting plume opacity. It also describes procedures to certify the DCOT.
- ASTM D6784–02, (Reapproved 2008), Standard Test Method for Elemental, Oxidized, Particle-Bound and Total Mercury in Flue Gas Generated from Coal-Fired Stationary Sources (Ontario Hydro Method), Approved April 1, 2008. IBR requested for 40 CFR 63.1450(d)(1)(v). This method is an acceptable alternative to the EPA's Method 29 as a method for measuring mercury and applies to concentrations approximately from 0.5 to 100 $\mu g/Nm^3$. This test method describes equipment and procedures for obtaining samples from effluent ducts and stacks, equipment and procedures for laboratory analysis, and procedures for calculating results.

The ANSI/ASME document is available from the American Society of Mechanical Engineers (ASME) at *http://www.asme.org;* by mail at Two Park Avenue, New York, NY 10016–5990; or by telephone at (800) 843–2763. The ASTM documents are available from the American Society for Testing and Materials (ASTM) at *https://www.astm.org;* by mail at l00 Barr Harbor Drive, P.O. Box C700, West Conshohocken, PA 19428–2959; or by telephone at (610) 832–9500.

IX. Statutory and Executive Order Reviews

Additional information about these statutes and Executive Orders can be found at *https://www.epa.gov/laws-regulations/laws-and-executive-orders.*

A. Executive Order 12866: Regulatory Planning and Review and Executive Order 13563: Improving Regulation and Regulatory Review

This action is a significant regulatory action that was submitted to OMB for review. Any changes made in response to OMB recommendations have been documented in the docket (Docket ID No. EPA–HQ–OAR–2020–0430).

B. Paperwork Reduction Act (PRA)

1. 40 CFR Part 63, subpart QQQ

The information collection activities in this proposed rule have been submitted for approval to OMB under the PRA. The information collection request (ICR) document that the EPA prepared has been assigned EPA ICR number 1850.10. You can find a copy of the ICR in the docket for this rule, and it is briefly summarized here.

The EPA is proposing amendments that require electronic reporting of results of performance tests and CEMS performance evaluations, fugitive dust plans and notification of compliance reports, remove the requirement to submit certain information related to the malfunction exemption, and impose other rule revisions that affect reporting and recordkeeping requirements for primary copper smelting facilities, such as requirements to submit new performance test reports and to maintain new operating parameter records to demonstrate compliance with new standards. This information would be collected to assure compliance with 40 CFR part 63, subpart QQQ.

Respondents/affected entities: Owners or operators of primary copper smelting facilities.

Respondent's obligation to respond: Mandatory (40 CFR part 63, subpart QQQ).

Estimated number of respondents: Two (total).

Frequency of response: Initial, semiannual, and annual.

Total estimated burden: The annual recordkeeping and reporting burden for facilities to comply with all of the requirements in the NESHAP is estimated to be 5,500 hours (per year). Burden is defined at 5 CFR 1320.3(b).

Total estimated cost: The annual recordkeeping and reporting burden for facilities to comply with all of the requirements in the NESHAP is estimated to be $750,000 (per year), of which $130,000 is for this rule, and $620,000 is for the other costs related to continued compliance with the NESHAP. There are no annualized capital or operation & maintenance costs.

2. 40 CFR Part 63, Subpart EEEEEE

The information collection activities in this proposed rule have been submitted for approval to OMB under the PRA. The ICR document that the EPA prepared has been assigned EPA ICR number 2240.07. You can find a copy of the ICR in the docket for this rule, and it is briefly summarized here.

The EPA is proposing amendments that require electronic reporting of results of performance tests and CEMS performance evaluations and notification of compliance reports, remove the malfunction exemption, and impose other revisions that affect reporting and recordkeeping for primary copper smelting facilities. This information would be collected to assure compliance with 40 CFR part 63, subpart EEEEEE.

Respondents/affected entities: Owners or operators of primary copper smelting facilities.

Respondent's obligation to respond: Mandatory (40 CFR part 63, subpart EEEEEE).

Estimated number of respondents: One (total).

Frequency of response: Initial, semiannual, and quarterly.

Total estimated burden: The annual recordkeeping and reporting burden for facilities to comply with all of the requirements in the NESHAP is estimated to be 9 hours (per year). Burden is defined at 5 CFR 1320.3(b).

Total estimated cost: The annual recordkeeping and reporting burden for facilities to comply with all of the requirements in the NESHAP is estimated to be $1,060 (per year). There are no annualized capital or operation & maintenance costs.

An agency may not conduct or sponsor, and a person is not required to respond to, a collection of information unless it displays a currently valid OMB control number. The OMB control numbers for the EPA's regulations in 40 CFR are listed in 40 CFR part 9.

Submit your comments on the Agency's need for this information, the accuracy of the provided burden estimates, and any suggested methods for minimizing respondent burden to the EPA using the docket identified at the beginning of this rule. You may also send your ICR-related comments to OMB's Office of Information and Regulatory Affairs via email to *OIRA_submission@omb.eop.gov,* Attention: Desk Officer for the EPA. Since OMB is required to make a decision concerning the ICR between 30 and 60 days after receipt, OMB must receive comments no later than February 10, 2022. The EPA will respond to any ICR-related comments in the final rule.

C. Regulatory Flexibility Act (RFA)

I certify that this action will not have a significant economic impact on a substantial number of small entities under the RFA. This action will not impose any requirements on small entities. Based on the Small Business Administration size category for this source category, no small entities are subject to this action.

D. Unfunded Mandates Reform Act (UMRA)

This action does not contain any unfunded mandate as described in UMRA, 2 U.S.C. 1531–1538, and does not significantly or uniquely affect small governments. The action imposes no enforceable duty on any state, local, or tribal governments or the private sector.

E. Executive Order 13132: Federalism

This action does not have federalism implications. It will not have substantial direct effects on the states, on the relationship between the national government and the states, or on the distribution of power and responsibilities among the various levels of government.

F. Executive Order 13175: Consultation and Coordination With Indian Tribal Governments

This action does not have tribal implications as specified in Executive Order 13175. Thus, Executive Order 13175 does not apply to this action. However, consistent with the EPA policy on coordination and consultation with Indian tribes, the EPA will offer government-to-government consultation with tribes as requested.

G. Executive Order 13045: Protection of Children From Environmental Health Risks and Safety Risks and 1 CFR Part 51

This action is not subject to Executive Order 13045 because the EPA does not believe the environmental health or safety risks addressed by this action present a disproportionate risk to children. This action's health and risk assessments are contained in sections III and IV of this preamble and further documented in the document titled *Residual Risk Assessment for the Primary Copper Smelting Major Source Category in Support of the 2021 Risk and Technology Review Proposed Rule,* which is available in the docket for this proposed rule (Docket ID No. EPA–HQ–OAR–2020–0430).

H. Executive Order 13211: Actions Concerning Regulations That Significantly Affect Energy Supply, Distribution, or Use

This action is not a ''significant energy action'' because it is not likely to have a significant adverse effect on the supply, distribution, or use of energy. As described in more details in sections IV.A and V.D of this preamble, new standards are proposed for 40 CFR part 63, subpart QQQ to limit mercury emissions, and PM emissions from anode refining furnaces and process roof vents. The proposed limits would have minimal impacts on the affected facilities because they mostly already meet the limits. One facility will have to improve their capture and control systems, which they were already planning to do as referenced in a consent order with the state of Arizona.

I. National Technology Transfer and Advancement Act (NTTAA)

This rulemaking involves technical standards. Therefore, the EPA conducted searches for National Emission Standards for Hazardous Air Pollutants: Primary Copper Smelting Residual Risk and Technology Review and Primary Copper Smelting Area Source Technology Review through the Enhanced NSSN Database managed by the American National Standards Institute (ANSI). The Agency also contacted VCS organizations and accessed and searched their databases. Searches were conducted for the EPA Methods 1, 1A, 2, 2A, 2C, 2D, 2F, 2G, 3, 3A, 3B, 4, 5, 5B, 9, 17, 22, 29, 30A, 30B of 40 CFR part 60, appendix A, and EPA Method 201A appendix M, 40 CFR part 51. No applicable VCS were identified for EPA Methods 1A, 2A, 2D, 2F, 2G, 5B, 5D, 22, 30A, 30B.

During the search, if the title or abstract (if provided) of the VCS described technical sampling and analytical procedures that are similar to the EPA's reference method, the EPA considered it as a potential equivalent method. All potential standards were reviewed to determine the practicality of the VCS for this rule. This review requires significant method validation data which meets the requirements of the EPA Method 301 for accepting alternative methods or scientific, engineering and policy equivalence to procedures in the EPA reference methods. The EPA may reconsider determinations of impracticality when additional information is available for particular VCS.

Three VCS were identified as an acceptable alternative to the EPA test methods for the purposes of this rule. The VCS ANSI/ASME PTC 19–10–1981 Part 10 (2010), ''Flue and Exhaust Gas Analyses'' is an acceptable alternative to the EPA Method 3B manual portion only and not the instrumental portion. The ANSI/ASME PTC 19–10–1981 Part 10 (2010) method incorporates both manual and instrumental methodologies for the determination of O2 content. The manual method segment of the O2 determination is performed through the absorption of O2. The VCS ASTM D7520–16 ''Standard Test Method for Determining the Opacity of a Plume in the Outdoor Ambient Atmosphere'' is an acceptable alternative to the EPA Method 9 with the following conditions:

1. During the digital camera opacity technique (DCOT) certification procedure outlined in section 9.2 of ASTM D7520–16, you or the DCOT vendor must present the plumes in front of various backgrounds of color and contrast representing conditions anticipated during field use such as blue sky, trees, and mixed backgrounds (clouds and/or a sparse tree stand).

2. You must also have standard operating procedures in place including daily or other frequency quality checks to ensure the equipment is within manufacturing specifications as

outlined in section 8.1 of ASTM D7520–16.

3. You must follow the record keeping procedures outlined in § 63.10(b)(1) for the DCOT certification, compliance report, data sheets, and all raw unaltered JPEGs used for opacity and certification determination.

4. You or the DCOT vendor must have a minimum of four (4) independent technology users apply the software to determine the visible opacity of the 300 certification plumes. For each set of 25 plumes, the user may not exceed 15 percent opacity of anyone reading and the average error must not exceed 7.5 percent opacity.

5. This approval does not provide or imply a certification or validation of any vendor's hardware or software. The onus to maintain and verify the certification and/or training of the DCOT camera, software and operator in accordance with ASTM D7520–16 and this letter is on the facility, DCOT operator, and DCOT vendor.

The VCS ASTM D6784–02(2008) reapproved, ''Standard Test Method for Elemental, Oxidized, Particle-Bound and Total Mercury Gas Generated from Coal-Fired Stationary Sources (Ontario Hydro Method)'' is an acceptable alternative to the EPA Methods 101A and Method 29 (portion for mercury only) as a method for measuring mercury applies to concentrations approximately 0.5–100 μg/Nm^3. The ASTM D6784–02 method is used to determine elemental, oxidized, particle-bound and total mercury emissions from coal-fired stationary sources with concentrations ranging from approximately 0.05 to 100 ug/dscm.

The search identified 189 VCS that were potentially applicable for these rules in lieu of the EPA reference methods. After reviewing the available standards, the EPA determined that 199 candidate VCS (ASTM D3154–00 (2014), ASTM D3464–96 (2014), ASTM 3796–09 (2016), ISO 10780:1994 (2016), ASME B133.9–1994 (2001), ISO 10396:(2007), ISO 12039:2001(2012), ASTM D5835–95 (2013), ASTM D6522–11, CAN/CSA Z223.2–M86 (R1999), ISO 9096:1992 (2003), ANSI/ASME PTC–38–1980 (1985), ASTM D3685/D3685M–98–13, CAN/CSA Z223.1–M1977, ISO 10397:1993, ASTM D6331 (2014), EN13211:2001, CAN/CSA Z223.26–M1987) identified for measuring emissions of pollutants or their surrogates subject to emission standards in the rule would not be practical due to lack of equivalency, documentation, validation data and other important technical and policy considerations. Additional information for the VCS search and determinations can be found in the memorandum, *Voluntary Consensus Standard Results for National Emission Standards for Hazardous Air Pollutants: Primary Copper Smelting Residual Risk and Technology Review and Primary Copper Smelting Area Source Technology Review,* which is available in the docket for this action.

Under 40 CFR 63.7(f) and 40 CFR 63.8(f) of subpart A of the General Provisions, a source may apply to the EPA to use alternative test methods or alternative monitoring requirements in place of any required testing methods, performance specifications or procedures in the final rule or any amendments.

The EPA welcomes comments on this aspect of the proposed rulemaking and, specifically, invites the public to identify potentially applicable VCS and to explain why such standards should be used in this regulation.

J. Executive Order 12898: Federal Actions To Address Environmental Justice in Minority Populations and Low-Income Populations

Executive Order 12898 (59 FR 7629, February 16, 1994) directs federal agencies, to the greatest extent practicable and permitted by law, to make environmental justice part of their mission by identifying and addressing, as appropriate, disproportionately high and adverse human health or environmental effects of their programs, policies, and activities on minority populations and low-income populations. The EPA believes that this proposed action would not have disproportionately high and adverse human health or environmental effects on minority populations, low-income populations, and/or indigenous peoples, as specified in Executive Order 12898.

The EPA defines environmental justice as the fair treatment and meaningful involvement of all people regardless of race, color, national origin, or income with respect to the development, implementation, and enforcement of environmental laws, regulations, and policies. The EPA further defines the term fair treatment to mean that ''no group of people should bear a disproportionate burden of environmental harms and risks, including those resulting from the negative environmental consequences of industrial, governmental, and commercial operations or programs and policies.'' [34] In implementing its environmental justice-related efforts, the Agency has expanded the concept of fair treatment to consider not only the distribution of burdens across all populations, but also the distribution of reductions in risk from EPA actions, when data allow.[35] As described in section IV.B.7 of this action and shown in Table 3, EPA evaluated the demographic characteristics of communities located near the major source facilities and determined that elevated cancer risks associated with emissions from these facilities disproportionately affect Native American, Hispanic, Below Poverty Level and *Over 25 without High School Diploma individuals* living nearby. As part of its environmental justice analysis, EPA evaluated whether the proposed action for the Primary Copper Smelting Major Source Category would address the existing disproportionately high and adverse human health effect on these individuals and EPA further evaluated the projected distribution of reductions in risk resulting from the proposed action.

This proposed action is projected to reduce the number of individuals in these groups who live in proximity of the Freeport facility that have risk equal to or greater than 1-in-1 million. EPA estimates that there are approximately 24,412 people within 50 km of the Freeport facility with risk equal to or greater than 1-in-1 million (prior to controls); an estimated 6,835 of these people are Native American, 7,812 are Hispanic or Latino, and 6,591 are individuals below the poverty level. However, as described in section IV.B, we also estimate that no person has an increased cancer risk greater than 90-in-1 million. This proposed action would reduce the number of Native American individuals with cancer risk equal to or above 1-in-1 million to an estimated 2,724, would reduce the number of Hispanic or Latino individuals with cancer risk equal to or above 1-in-1 million to an estimated 7,198, and would reduce the number of individuals below the poverty level with cancer risk equal to or above 1-in-1 million to an estimated 4,475. There would be no reduction in the number of individuals with modeled cancer risk greater than 1-in-1 million at Asarco, since EPA estimates the proposed limit will

[34] U.S. EPA. Office of Environmental Justice *Plan EJ 2014,* September 2011. Available at *https://nepis.epa.gov/Exe/ZyPDF.cgi/P100DFCQ.PDF?Dockey=P100DFCQ.PDF.*

For more information, see the EPA's Environmental Justice website, *http://www.epa.gov/environmentaljustice/.*

[35] U.S. EPA. June 2016. *Technical Guidance for Assessing Environmental Justice in Regulatory Actions.* Available at:

https://www.epa.gov/sites/production/files/2016-06/documents/ejtg_5_6_16_v5.1.pdf.

achieve no quantified emissions reductions for Asarco.

Based upon these reductions, approximately 20,566 people within a 50-km radius of the modeled facilities would be exposed to a cancer risk greater than or equal to 1-in-1 million as a result of emissions from Primary Copper Smelting post-control source category operations. This represents a 21 percent reduction in the total population at risk when compared to actual emissions without controls. Furthermore, as described in section IV.C.3, after implementation of this proposed action, the maximum modeled lifetime increased cancer risk due to HAP emissions from the two major source primary copper smelting facilities for any individual is estimated to be 60-in-1 million. The demographic analysis based on post-control emissions is provided in the report *Risk and Technology Review—Analysis of Demographic Factors for Populations Living Near Primary Copper Smelting Post-Control Source Category Operations,* available in docket EPA–HQ–OAR–2020–0430, part of the rules and guidelines for 40 CFR part 63, subpart QQQ).

The above risk-based demographic report indicates that for the major source category as a whole there will be a reduction in average cancer risk for each demographic group within a 50 kilometer radius of the modeled facilities as a result of proposed standards to reduce emissions at the Freeport facility, specifically: Hispanic or Latino (4-in-1 million to 3-in-1 million); Native American (2-in-1 million to 1-in-1 million); African American (10-in-1 million to 5-in-1 million); Other and Multiracial (5-in-1 million to 3-in-1 million); people living below the poverty level (4-in-1 million to 2-in-1 million); people 25 years old and older without a high school diploma (4-in-1 million to 2-in-1 million); and people living in linguistic isolation (4-in-1 million to 2-in-1 million). For the total population exposed to emissions from the major source category, average cancer risk would be reduced from 4-in-1 million to 2-in-1 million.

This action's health and risk assessments and related decisions are described in section IV of this action. The detailed documentation for these assessments is contained in the *Residual Risk Assessment for the Primary Copper Smelting Major Source Category in Support of the 2021 Risk and Technology Review Proposed Rule.* The methodology and the results of the baseline and post-control demographic analyses are presented in the technical reports, *Risk and Technology Review—Analysis of Demographic Factors for Populations Living Near Primary Copper Smelting Source Category Operations and Risk and Technology Review—Analysis of Demographic Factors For Populations Living Near Primary Copper Smelting Post-Control Source Category Operations,* respectively. These reports are available in the docket for this proposed rule (Docket ID No. EPA–HQ–OAR–2020–0430).

List of Subjects in 40 CFR Part 63

Environmental protection, Air pollution control, Hazardous substances, Incorporation by reference, Reporting and recordkeeping requirements.

Michael S. Regan,

Administrator.

[FR Doc. 2021–28273 Filed 1–10–22; 8:45 am]

BILLING CODE 6560–50–P

Reader Aids

Federal Register

Vol. 87, No. 7

Tuesday, January 11, 2022

CUSTOMER SERVICE AND INFORMATION

Federal Register/Code of Federal Regulations	
General Information, indexes and other finding aids	**202–741–6000**
Laws	**741–6000**
Presidential Documents	
Executive orders and proclamations	**741–6000**
The United States Government Manual	**741–6000**
Other Services	
Electronic and on-line services (voice)	**741–6020**
Privacy Act Compilation	**741–6050**

ELECTRONIC RESEARCH

World Wide Web

Full text of the daily Federal Register, CFR and other publications is located at: **www.govinfo.gov.**

Federal Register information and research tools, including Public Inspection List and electronic text are located at: **www.federalregister.gov.**

E-mail

FEDREGTOC (Daily Federal Register Table of Contents Electronic Mailing List) is an open e-mail service that provides subscribers with a digital form of the Federal Register Table of Contents. The digital form of the Federal Register Table of Contents includes HTML and PDF links to the full text of each document.

To join or leave, go to **https://public.govdelivery.com/accounts/USGPOOFR/subscriber/new**, enter your email address, then follow the instructions to join, leave, or manage your subscription.

PENS (Public Law Electronic Notification Service) is an e-mail service that notifies subscribers of recently enacted laws.

To subscribe, go to **http://listserv.gsa.gov/archives/publaws-l.html and select** *Join or leave the list (or change settings);* then follow the instructions.

FEDREGTOC and **PENS** are mailing lists only. We cannot respond to specific inquiries.

Reference questions. Send questions and comments about the Federal Register system to: **fedreg.info@nara.gov**

The Federal Register staff cannot interpret specific documents or regulations.

FEDERAL REGISTER PAGES AND DATE, JANUARY

1–150 3
151–376 4
377–728 5
729–874 6
875–1060 7
1061–1316 10
1317–1656 11

CFR PARTS AFFECTED DURING JANUARY

At the end of each month the Office of the Federal Register publishes separately a List of CFR Sections Affected (LSA), which lists parts and sections affected by documents published since the revision date of each title.

3 CFR

Proclamations:
9704 (Amended by Proc. 10327) 1
9705 (Amended by Proc. 10328) 11
9980 (Amended by Proc. 10328) 11
10315 (Revoked by Proc. 10329) 149
10327 1
10328 11
10329 149
10330 151
10331 869
10332 871
10333 873

Administrative Orders:
Memorandums:
Memorandum of December 27, 2021 27

5 CFR

Proposed Rules:
315 200
432 200
724 736
752 200

6 CFR

27 1317

8 CFR

270 1317
274a 1317
280 1317

9 CFR

93 29

10 CFR

207 1061
218 1061
429 1061
431 1061
490 1061
501 1061
601 1061
820 1061
824 1061
851 1061
1013 1061
1017 1061
1050 1061

Proposed Rules:
429 ..... 890, 1554
430 ..... 890, 1554
431 1554

12 CFR

337 1065
622 1331
747 377

13 CFR

121 380

14 CFR

25 1066
27 1068
39 ..... 29, 382, 385, 1333, 1335, 1338, 1340, 1343, 1346, 1349, 1352
95 388
97 ..... 153, 156

Proposed Rules:
39 ..... 55, 1083

15 CFR

6 157
15 160
774 729

16 CFR

1 1070

Proposed Rules:
1112 ..... 1014, 1260
1120 891
1260 1014
1262 1260

17 CFR

232 391

18 CFR

12 1490

19 CFR

4 1317

21 CFR

Proposed Rules:
112 913

22 CFR

35 1072
103 1072
127 1072
138 1072

23 CFR

625 32

26 CFR

1 ..... 166, 276
301 166

27 CFR

478 182

30 CFR

Proposed Rules:
917 1370

926 1372

31 CFR

210 42
800 731
802 ....731, 875

33 CFR

27 1317
165 ....875, 1074, 1076, 1078, 1354

Proposed Rules:

165 916

34 CFR

Proposed Rules:

Ch. II 57

36 CFR

Proposed Rules:

7 ....413, 1374

38 CFR

Proposed Rules:

4 1522
17 418
21 1087

40 CFR

52 ....1356, 1358
63 393
147 47
180 ....1360, 1363
271 194

Proposed Rules:

63 ....421, 1616
180 1091
271 209

41 CFR

102–173 1080

42 CFR

414 199
1008 1367

43 CFR

8365 732

45 CFR

Proposed Rules:

144 584
147 584
153 584
155 584
156 584
158 584
1167 210

46 CFR

Proposed Rules:

2 1378

47 CFR

1 396
52 398

Proposed Rules:

64 212

48 CFR

615 1081
652 1081

49 CFR

1503 1317

Proposed Rules:

1144 62
1145 62

50 CFR

12 876
13 876
17 ....546, 876
19 876
20 876
21 876
22 876
217 885
300 885
622 ....51, 53, 886
648 887
679 ....412, 735

Proposed Rules:

17 1390

LIST OF PUBLIC LAWS

Note: No public bills which have become law were received by the Office of the Federal Register for inclusion in today's **List of Public Laws**.

Last List December 30, 2021

Public Laws Electronic Notification Service (PENS)

PENS is a free email notification service of newly enacted public laws. To subscribe, go to *https://listserv.gsa.gov/cgi-bin/wa.exe?SUBED1=PUBLAWS-L&A=1*

Note: This service is strictly for email notification of new laws. The text of laws is not available through this service. **PENS** cannot respond to specific inquiries sent to this address.