AUTHENTICATED
U.S. GOVERNMENT
INFORMATION
GPO

FEDERAL REGISTER

Vol. 86 Tuesday

No. 209 November 2, 2021

Pages 60357–60530

OFFICE OF THE FEDERAL REGISTER

The **FEDERAL REGISTER** (ISSN 0097–6326) is published daily, Monday through Friday, except official holidays, by the Office of the Federal Register, National Archives and Records Administration, under the Federal Register Act (44 U.S.C. Ch. 15) and the regulations of the Administrative Committee of the Federal Register (1 CFR Ch. I). The Superintendent of Documents, U.S. Government Publishing Office, is the exclusive distributor of the official edition. Periodicals postage is paid at Washington, DC.

The **FEDERAL REGISTER** provides a uniform system for making available to the public regulations and legal notices issued by Federal agencies. These include Presidential proclamations and Executive Orders, Federal agency documents having general applicability and legal effect, documents required to be published by act of Congress, and other Federal agency documents of public interest.

Documents are on file for public inspection in the Office of the Federal Register the day before they are published, unless the issuing agency requests earlier filing. For a list of documents currently on file for public inspection, see *www.federalregister.gov.*

The seal of the National Archives and Records Administration authenticates the Federal Register as the official serial publication established under the Federal Register Act. Under 44 U.S.C. 1507, the contents of the **Federal Register** shall be judicially noticed.

The **Federal Register** is published in paper and on 24x microfiche. It is also available online at no charge at *www.govinfo.gov*, a service of the U.S. Government Publishing Office.

The online edition of the **Federal Register** is issued under the authority of the Administrative Committee of the Federal Register as the official legal equivalent of the paper and microfiche editions (44 U.S.C. 4101 and 1 CFR 5.10). It is updated by 6:00 a.m. each day the **Federal Register** is published and includes both text and graphics from Volume 1, 1 (March 14, 1936) forward. For more information, contact the GPO Customer Contact Center, U.S. Government Publishing Office. Phone 202-512-1800 or 866-512-1800 (toll free). E-mail, *gpocusthelp.com.*

The annual subscription price for the **Federal Register** paper edition is $860 plus postage, or $929, for a combined **Federal Register, Federal Register** Index and List of CFR Sections Affected (LSA) subscription; the microfiche edition of the **Federal Register** including the **Federal Register** Index and LSA is $330, plus postage. Six month subscriptions are available for one-half the annual rate. The prevailing postal rates will be applied to orders according to the delivery method requested. The price of a single copy of the daily **Federal Register,** including postage, is based on the number of pages: $11 for an issue containing less than 200 pages; $22 for an issue containing 200 to 400 pages; and $33 for an issue containing more than 400 pages. Single issues of the microfiche edition may be purchased for $3 per copy, including postage. Remit check or money order, made payable to the Superintendent of Documents, or charge to your GPO Deposit Account, VISA, MasterCard, American Express, or Discover. Mail to: U.S. Government Publishing Office—New Orders, P.O. Box 979050, St. Louis, MO 63197-9000; or call toll free 1-866-512-1800, DC area 202-512-1800; or go to the U.S. Government Online Bookstore site, see *bookstore.gpo.gov.*

There are no restrictions on the republication of material appearing in the **Federal Register.**

How To Cite This Publication: Use the volume number and the page number. Example: 86 FR 12345.

Postmaster: Send address changes to the Superintendent of Documents, Federal Register, U.S. Government Publishing Office, Washington, DC 20402, along with the entire mailing label from the last issue received.

SUBSCRIPTIONS AND COPIES

PUBLIC

Subscriptions:

Paper or fiche	**202–512–1800**
Assistance with public subscriptions	**202–512–1806**

General online information **202–512–1530; 1–888–293–6498**

Single copies/back copies:

Paper or fiche	**202–512–1800**
Assistance with public single copies	**1–866–512–1800 (Toll-Free)**

FEDERAL AGENCIES

Subscriptions:

Assistance with Federal agency subscriptions:

Email	*FRSubscriptions@nara.gov*
Phone	**202–741–6000**

The Federal Register Printing Savings Act of 2017 (Pub. L. 115-120) placed restrictions on distribution of official printed copies of the daily **Federal Register** to members of Congress and Federal offices. Under this Act, the Director of the Government Publishing Office may not provide printed copies of the daily **Federal Register** unless a Member or other Federal office requests a specific issue or a subscription to the print edition. For more information on how to subscribe use the following website link: *https://www.gpo.gov/frsubs.*

Printed on recycled paper.

Contents

Federal Register

Vol. 86, No. 209

Tuesday, November 2, 2021

Agriculture Department
NOTICES
Requests for Nominations:
Equity Commission Advisory Committee and Equity Commission Subcommittee on Agriculture Extension of Application Period; Correction, 60441

Bureau of Consumer Financial Protection
RULES
Truth in Lending:
Annual Threshold Adjustments, 60357–60364

Centers for Disease Control and Prevention
NOTICES
Agency Information Collection Activities; Proposals, Submissions, and Approvals, 60463–60464
The Need to Establish Personal Protective Technology Centers of Excellence to Address Research and Practice Gaps, 60462–60463

Civil Rights Commission
NOTICES
Meetings:
Commission on the Social Status of Black Men and Boys, 60441

Commerce Department
See Foreign-Trade Zones Board
See International Trade Administration
See National Oceanic and Atmospheric Administration
NOTICES
Agency Information Collection Activities; Proposals, Submissions, and Approvals:
Identifying Actionable Opportunities to Advance Equity and Remove Barriers to Support Underserved Communities, 60441–60443

Commodity Futures Trading Commission
NOTICES
Agency Information Collection Activities; Proposals, Submissions, and Approvals:
Core Principles and Other Requirements for Swap Execution Facilities, 60448–60449

Defense Department
See Engineers Corps

Education Department
See National Assessment Governing Board
NOTICES
Agency Information Collection Activities; Proposals, Submissions, and Approvals:
Borrower Defenses Against Loan Repayment, 60454
School Pulse Panel Data Collection, 60454–60455

Energy Department
See Federal Energy Regulatory Commission
PROPOSED RULES
Energy Conservation Program:
Test Procedure for External Power Supplies, 60376–60396
NOTICES
Meetings:
President's Council of Advisors on Science and Technology, 60455–60456

Engineers Corps
NOTICES
National Wetland Plant List, 60449–60452

Environmental Protection Agency
RULES
Pesticide Tolerances:
Benzobicyclon, 60368–60372
PROPOSED RULES
Air Quality State Implementation Plans; Approvals and Promulgations:
Colorado; Denver Metro/North Front Range Nonattainment Area; Nonattainment NSR Permit Program Certification for the 2015 8-Hour Ozone Standard, 60434–60436
NOTICES
Agency Information Collection Activities; Proposals, Submissions, and Approvals:
Generic Clearance for TSCA Section 4 Test Rules, Test Orders, Enforceable Consent Agreements, Voluntary Data Submissions, and Exemptions from Testing Requirements, 60460–60461
Settlement Agreement:
LL Harwell Road Private Well Contamination Superfund Site Gastonia, NC, 60460

Federal Aviation Administration
RULES
Airspace Designations and Reporting Points:
South Florida, 60367–60368
Airworthiness Directives:
Leonardo S.p.a. Helicopters, 60364–60367
PROPOSED RULES
Airspace Designations and Reporting Points:
Kit Carson County Airport, CO, 60423–60424
Vicinity of Borger, TX, 60418–60421
Vicinity of Kokomo, IN, 60421–60423
Vicinity of Oswego, KS, 60416–60418
Flight Attendant Duty Period Limitations and Rest Requirements, 60424–60434

Federal Communications Commission
PROPOSED RULES
Rates for Interstate Inmate Calling Services, 60438–60440
Wireless Telecommunication Bureau Seeks to Supplement the Record on 70/80/90 GHZ Bands, 60436–60438

Federal Emergency Management Agency
NOTICES
Agency Information Collection Activities; Proposals, Submissions, and Approvals:
Federal Hotel and Motel Fire Safety Declaration Form, 60465–60466

Federal Energy Regulatory Commission
NOTICES
Agency Information Collection Activities; Proposals, Submissions, and Approvals, 60456–60457

Application:
Georgia Power Co., 60459
Environmental Impact Statements; Availability, etc.:
Spire Storage West, LLC; Proposed Clear Creek Expansion Project, 60457–60459
Meetings:
Joint Federal-State Task Force on Electric Transmission, 60457
Waiver Period for Water Quality Certification Application:
Cocheco Falls Associates, 60456

Federal Reserve System
NOTICES
Formations of, Acquisitions by, and Mergers of Bank Holding Companies, 60461

Foreign-Trade Zones Board
NOTICES
Authorization of Export-Only Production Activity:
Galdisa USA; Foreign-Trade Zone 265; Conroe, TX, 60443
Authorization of Production Activity:
Liebel-Flarsheim Company, LLC; Foreign-Trade Zone 93; Raleigh/Durham, NC, 60443

General Services Administration
RULES
Acquisition Regulation:
Remove Office of General Council Review for Final Payments, 60372–60373

Health and Human Services Department
See Centers for Disease Control and Prevention
See Health Resources and Services Administration
See National Institutes of Health

Health Resources and Services Administration
NOTICES
Charter Renewal:
National Advisory Committee on Rural Health and Human Services, 60464

Homeland Security Department
See Federal Emergency Management Agency

Inter-American Foundation
NOTICES
Meetings; Sunshine Act, 60466

Interior Department
See National Park Service

International Trade Administration
NOTICES
Determination of Sales at Less Than Fair Value:
Organic Soybean Meal from India, 60443–60446

International Trade Commission
NOTICES
Investigations; Determinations, Modifications, and Rulings, etc.:
Certain Botulinum Toxin Products, Processes for Manufacturing or Relating to Same and Certain Products Containing Same, 60469–60470
Certain Composite Baseball and Softball Bats and Components Thereof, 60468–60469
Certain Electronic Devices Having Wireless Communication Capabilities and Components Thereof, 60467–60468

Justice Department
NOTICES
Agency Information Collection Activities; Proposals, Submissions, and Approvals, 60474
Agency Information Collection Activities; Proposals, Submissions, and Approvals:
Identification Markings Placed on Firearms, 60475
National Incident-Based Reporting System, 60470–60471
National Use-of-Force Data Collection, 60472–60474
Recordkeeping for Electronic Prescriptions for Controlled Substances, 60472

Labor Department
See Occupational Safety and Health Administration

National Aeronautics and Space Administration
NOTICES
Agency Information Collection Activities; Proposals, Submissions, and Approvals:
NASA Serves the Public to Inspire Reach-Out and Engage (NSPIREHub), 60477
Property in the Custodian of Contractors, 60477–60478

National Archives and Records Administration
NOTICES
Records Schedules, 60478–60479

National Assessment Governing Board
NOTICES
Meetings, 60452–60453

National Institutes of Health
NOTICES
Meetings:
Center for Scientific Review, 60465
Eunice Kennedy Shriver National Institute of Child Health and Human Development, 60465
National Institute of Neurological Disorders and Stroke, 60464–60465

National Oceanic and Atmospheric Administration
RULES
Fisheries of the Caribbean, Gulf of Mexico, and South Atlantic:
2021 Re-opening of Commercial Harvest for South Atlantic Red Snapper, 60373
Electronic Reporting for Federally Permitted Charter Vessels and Headboats in Gulf of Mexico Fisheries, 60374
Fisheries of the Northeastern United States:
Summer Flounder Fishery; Quota Transfer from North Carolina to Connecticut, 60375
NOTICES
Alaska Coastal Mapping Strategy Implementation Plan, 60446
Meetings:
Mid-Atlantic Fishery Management Council, 60448
Permit Application:
Magnuson-Stevens Act Provisions; General Provisions for Domestic Fisheries; Exempted Fishing, 60446–60448

National Park Service
NOTICES
National Register of Historic Places:
Pending Nominations and Related Actions, 60466–60467

Nuclear Regulatory Commission
NOTICES
Applications and Amendments to Facility Operating Licenses and Combined Licenses Involving No Significant Hazards Considerations, 60481–60490
Exemption; Issuance:
Tennessee Valley Authority; Sequoyah Nuclear Plant, Units 1 and 2, 60479–60481

Occupational Safety and Health Administration
NOTICES
Nationally Recognized Testing Laboratories:
LabTest Certification Inc.; Grant of Recognition, 60475–60477

Personnel Management Office
RULES
Expand Access to Federal Employees Health Benefits for Employees of Certain Tribally Controlled Schools; Extension of Comment Period, 60357

Postal Regulatory Commission
NOTICES
Privacy Act; System of Records, 60490–60493

Railroad Retirement Board
NOTICES
Meetings; Sunshine Act, 60493

Securities and Exchange Commission
NOTICES
Privacy Act; Systems of Records, 60496–60498
Self-Regulatory Organizations; Proposed Rule Changes:
Cboe BYX Exchange, Inc.; Cboe BZX Exchange, Inc.; Cboe C2 Exchange, Inc.; et al., 60524–60525
ICE Clear Credit LLC, 60493–60496
Municipal Securities Rulemaking Board, 60522–60524
NYSE Arca, Inc., 60516–60522
The Options Clearing Corp., 60499–60516

Small Business Administration
PROPOSED RULES
Small Business Size Standards:
Calculation of Number of Employees for All Programs and of Average Annual Receipts in the Business Loan, Disaster Loan, and Small Business Investment Company Programs, 60396–60416
NOTICES
Disaster Declaration:
Oregon, 60525
Major Disaster Declaration:
Louisiana, 60526
New Jersey; Amendment No. 4, 60525–60526
Virginia, 60526

Transportation Department
See Federal Aviation Administration
NOTICES
Rights and Protections Available Under the Federal Antidiscrimination and Whistleblower Protection Laws, 60526–60528

Veterans Affairs Department
NOTICES
Agency Information Collection Activities; Proposals, Submissions, and Approvals:
Application by Insured Terminally Ill Person for Accelerated Benefit, 60528–60529
Information Regarding Apportionment of Beneficiary's Award; Withdrawn, 60528
Medical Expense Report, 60529

Reader Aids

Consult the Reader Aids section at the end of this issue for phone numbers, online resources, finding aids, and notice of recently enacted public laws.

To subscribe to the Federal Register Table of Contents electronic mailing list, go to https://public.govdelivery.com/accounts/USGPOOFR/subscriber/new, enter your e-mail address, then follow the instructions to join, leave, or manage your subscription.

CFR PARTS AFFECTED IN THIS ISSUE

A cumulative list of the parts affected this month can be found in the Reader Aids section at the end of this issue.

5 CFR
890 60357

10 CFR
Proposed Rules:
430 60376

12 CFR
1026 60357

13 CFR
Proposed Rules:
121 60396

14 CFR
39 60364
71 60367
Proposed Rules:
71 (4 documents) 60416, 60418, 60421, 60423
121 60424

40 CFR
180 60368
Proposed Rules:
52 60434

47 CFR
Proposed Rules:
1 60436
2 60436
64 60438
101 60436

48 CFR
532 60372

50 CFR
622 (2 documents) 60373, 60374
648 60375

Rules and Regulations

Federal Register
Vol. 86, No. 209
Tuesday, November 2, 2021

This section of the FEDERAL REGISTER contains regulatory documents having general applicability and legal effect, most of which are keyed to and codified in the Code of Federal Regulations, which is published under 50 titles pursuant to 44 U.S.C. 1510.

The Code of Federal Regulations is sold by the Superintendent of Documents.

OFFICE OF PERSONNEL MANAGEMENT

5 CFR Part 890

RIN 3206–AO18

Access to Federal Employees Health Benefits (FEHB) for Employees of Certain Tribally Controlled Schools; Extension of Comment Period

AGENCY: Office of Personnel Management.

ACTION: Interim final rule; extension of comment period.

SUMMARY: The Office of Personnel Management (OPM) is extending the comment period to ensure that stakeholders have sufficient opportunity to submit comments on the interim final rule expanding access to FEHB for employees of certain tribally controlled schools.

DATES: The comment period for the interim final rule published on September 3, 2021, at 86 FR 49461, is extended. Written reply comments must be submitted no later than November 20, 2021.

ADDRESSES: You may submit comments, identified by docket number and/or Regulatory Information Number (RIN) and title, by the following method:

- *Federal Rulemaking Portal: http://www.regulations.gov.* Follow the instructions for submitting comments.

All submissions received must include the agency name and docket number or RIN for this document. The general policy for comments and other submissions from members of the public is to make these submissions available for public viewing at *http://www.regulations.gov* as they are received without change, including any personal identifiers or contact information.

FOR FURTHER INFORMATION CONTACT: Julia Elam, Program Analyst, at *julia.elam@opm.gov* or (202) 606–2128.

SUPPLEMENTARY INFORMATION: OPM published an interim final rule, Access to Federal Employees Health Benefits (FEHB) for Employees of Certain Tribally Controlled Schools, 86 FR 49461 on September 3, 2021. OPM provided 60 days for the public to comment on the interim final rule. However, comments were not accepted on *regulations.gov* during the first 18 days of the comment period due to a technical error. Therefore, we are extending the period for public comment on the interim final rule from November 2, 2021 to November 20, 2021.

Office of Personnel Management.

Alexys Stanley,

Regulatory Affairs Analyst.

[FR Doc. 2021–23739 Filed 11–1–21; 8:45 am]

BILLING CODE 6325–64–P

BUREAU OF CONSUMER FINANCIAL PROTECTION

12 CFR Part 1026

Truth in Lending (Regulation Z) Annual Threshold Adjustments (Credit Cards, HOEPA, and Qualified Mortgages)

AGENCY: Bureau of Consumer Financial Protection.

ACTION: Final rule; official interpretation.

SUMMARY: The Bureau of Consumer Financial Protection (Bureau) is issuing this final rule amending the regulation text and official interpretations for Regulation Z, which implements the Truth in Lending Act (TILA). The Bureau is required to calculate annually the dollar amounts for several provisions in Regulation Z; this final rule revises, as applicable, the dollar amounts for provisions implementing TILA and amendments to TILA, including under the Credit Card Accountability Responsibility and Disclosure Act of 2009 (CARD Act), the Home Ownership and Equity Protection Act of 1994 (HOEPA), and the Dodd-Frank Wall Street Reform and Consumer Protection Act (Dodd-Frank Act). The Bureau is adjusting these amounts, where appropriate, based on the annual percentage change reflected in the Consumer Price Index (CPI) in effect on June 1, 2021.

DATES: This final rule is effective January 1, 2022.

FOR FURTHER INFORMATION CONTACT: Willie Williams, Paralegal Specialist; or Lanique Eubanks, Senior Counsel, Office of Regulations, at (202) 435–7700. If you require this document in an alternative electronic format, please contact *CFPB_Accessibility@cfpb.gov.*

SUPPLEMENTARY INFORMATION: The Bureau is amending the regulation text and official interpretations for Regulation Z, which implements TILA, to update the dollar amounts of various thresholds that are adjusted annually based on the annual percentage change in the CPI as published by the Bureau of Labor Statistics (BLS). Specifically, for open-end consumer credit plans under TILA, the threshold that triggers requirements to disclose minimum interest charges will remain unchanged at $1.00 in 2022. For open-end consumer credit plans under the CARD Act amendments to TILA, the adjusted dollar amount in 2022 for the safe harbor for a first violation penalty fee will increase to $30 and the adjusted dollar amount for the safe harbor for a subsequent violation penalty fee will increase to $41. For HOEPA loans, the adjusted total loan amount threshold for high-cost mortgages in 2022 will be $22,969. The adjusted points-and-fees dollar trigger for high-cost mortgages in 2022 will be $1,148. For qualified mortgages (QMs) under the General QM loan definition in § 1026.43(e)(2), the thresholds for the spread between the annual percentage rate (APR) and the average prime offer rate (APOR) in 2022 will be: 2.25 or more percentage points for a first-lien covered transaction with a loan amount greater than or equal to $114,847; 3.5 or more percentage points for a first-lien covered transaction with a loan amount greater than or equal to $68,908 but less than $114,847; 6.5 or more percentage points for a first-lien covered transaction with a loan amount less than $68,908; 6.5 or more percentage points for a first-lien covered transaction secured by a manufactured home with a loan amount less than $114,847; 3.5 or more percentage points for a subordinate-lien covered transaction with a loan amount greater than or equal to $68,908; or 6.5 or more percentage points for a subordinate-lien covered transaction with a loan amount less than $68,908. For all categories of QMs, the thresholds for total points and

fees in 2022 will be 3 percent of the total loan amount for a loan greater than or equal to $114,847; $3,445 for a loan amount greater than or equal to $68,908 but less than $114,847; 5 percent of the total loan amount for a loan greater than or equal to $22,969 but less than $68,908; $1,148 for a loan amount greater than or equal to $14,356 but less than $22,969; and 8 percent of the total loan amount for a loan amount less than $14,356.[1]

I. Background

A. Credit Card Annual Adjustments

Minimum Interest Charge Disclosure Thresholds

Sections 1026.6(b)(2)(iii) and 1026.60(b)(3) of Regulation Z implement sections 127(a)(3) and 127(c)(1)(A)(ii)(II) of TILA. Sections 1026.6(b)(2)(iii) and 1026.60(b)(3) require creditors to disclose any minimum interest charge exceeding $1.00 that could be imposed during a billing cycle. These provisions also state that, for open-end consumer credit plans, the minimum interest charge thresholds will be re-calculated annually using the CPI that was in effect on the preceding June 1; the Bureau uses the Consumer Price Index for Urban Wage Earners and Clerical Workers (CPI–W) for this adjustment.[2] If the cumulative change in the adjusted minimum value derived from applying the annual CPI–W level to the current amounts in §§ 1026.6(b)(2)(iii) and 1026.60(b)(3) has risen by a whole dollar, the minimum interest charge amounts set forth in the regulation will be increased by $1.00. This adjustment analysis is based on the CPI–W index in effect on June 1, 2021, which was reported by BLS on May 12, 2021,[3] and reflects the percentage change from April 2020 to April 2021. The adjustment analysis accounts for a 4.7 percent increase in the CPI–W from April 2020 to April 2021. This increase in the CPI–W when applied to the current amounts in §§ 1026.6(b)(2)(iii) and 1026.60(b)(3) does not trigger an increase in the minimum interest charge threshold of at least $1.00, and the Bureau is therefore not amending §§ 1026.6(b)(2)(iii) and 1026.60(b)(3).

Safe Harbor Penalty Fees

Section 1026.52(b)(1)(ii)(A) and (B) of Regulation Z implements section 149(e) of TILA, which was added to TILA by the CARD Act.[4] Section 1026.52(b)(1)(ii)(D) provides that the safe harbor provision, which establishes the permissible penalty fee thresholds in § 1026.52(b)(1)(ii)(A) and (B), will be re-calculated annually using the CPI that was in effect on the preceding June 1; the Bureau uses the CPI–W for this adjustment. If the cumulative change in the adjusted value derived from applying the annual CPI–W level to the current amounts in § 1026.52(b)(1)(ii)(A) and (B) has risen by a whole dollar, those amounts will be increased by $1.00. Similarly, if the cumulative change in the adjusted value derived from applying the annual CPI–W level to the current amounts in § 1026.52(b)(1)(ii)(A) and (B) has decreased by a whole dollar, those amounts will be decreased by $1.00. *See* comment 52(b)(1)(ii)–2. The 2022 adjustment analysis is based on the CPI–W index in effect on June 1, 2021, which was reported by BLS on May 12, 2021, and reflects the percentage change from April 2020 to April 2021. The permissible fee thresholds increased to $30 for a first violation penalty fee and $41 for a subsequent violation reflect a 4.7 percent increase in the CPI–W from April 2020 to April 2021 with the resulting thresholds rounded to the nearest $1 increment.

B. HOEPA Annual Threshold Adjustments

Section 1026.32(a)(1)(ii) of Regulation Z implements section 1431 of the Dodd-Frank Act,[5] which amended the HOEPA points-and-fees coverage test. Under § 1026.32(a)(1)(ii)(A) and (B), in assessing whether a transaction is a high-cost mortgage due to points and fees the creditor is charging, the applicable points-and-fees coverage test depends on whether the total loan amount is for $20,000 or more, or for less than $20,000. Section 1026.32(a)(1)(ii) provides that this threshold amount be recalculated annually using the CPI index in effect on the preceding June 1; the Bureau uses the CPI–U for this adjustment.[6] The 2022 adjustment is based on the CPI–U index in effect on June 1, which was reported by BLS on May 12, 2021, and reflects the percentage change from April 2020 to April 2021. The adjustment to $22,969 here reflects a 4.2 percent increase in the CPI–U index from April 2020 to April 2021 and is rounded to the nearest whole dollar amount for ease of compliance.

Under § 1026.32(a)(1)(ii)(B) the HOEPA points-and-fees threshold is $1,000. Section 1026.32(a)(1)(ii)(B) provides that this threshold amount will be recalculated annually using the CPI index in effect on the preceding June 1; the Bureau uses the CPI–U for this adjustment. The 2022 adjustment is based on the CPI–U index in effect on June 1, 2021, which was reported by BLS on May 12, 2021, and reflects the percentage change from April 2020 to April 2021. The adjustment to $1,148 here reflects a 4.2 percent increase in the CPI–U index from April 2020 to April 2021 and is rounded to the nearest whole dollar amount for ease of compliance.

C. QM Annual Threshold Adjustments

The Bureau's Regulation Z implements sections 1411 and 1412 of the Dodd-Frank Act, which generally require creditors to make a reasonable, good-faith determination of a consumer's ability to repay any consumer credit transaction secured by a dwelling and establishes certain protections from liability under this requirement for QMs.

On December 10, 2020, the Bureau issued a final rule amending the General QM loan definition in § 1026.43(e)(2).[7] The final rule established pricing thresholds in § 1026.43(e)(2)(vi)(A) through (F) based on the spread of a loan's APR compared to the APOR for a comparable transaction as of the date the interest rate is set. To satisfy the General QM loan definition, a loan's APR must be below the applicable pricing threshold and satisfy other requirements in § 1026.43(e)(2). Specifically, under § 1026.43(e)(2)(vi), a covered transaction is a QM if the APR does not exceed the APOR for a comparable transaction as of the date the interest rate is set by: 2.25 or more

[1] The QM categories in Regulation Z are as follows: 12 CFR 1026.43(e)(2), (4), (5), and (6) applies only to covered transactions for which the application was received before April 1, 2016; and (e)(7).

[2] The CPI–W is a subset of the Consumer Price Index for All Urban Consumers (CPI–U) index and represents approximately 29 percent of the U.S. population.

[3] BLS publishes Consumer Price Indices monthly, usually in the middle of each calendar month. Thus, the CPI–W reported on May 12, 2021, was the most current as of June 1, 2021.

[4] Credit Card Accountability Responsibility and Disclosure Act of 2009, Public Law 111–24, 123 Stat. 1734 (2009).

[5] Dodd-Frank Wall Street Reform and Consumer Protection Act, Public Law 111–203, 124 Stat. 1376 (2010).

[6] The CPI–U is based on all urban consumers and represents approximately 93 percent of the U.S. population.

[7] 85 FR 86308 (Dec. 29, 2020). This final rule was initially effective on March 1, 2021, with a mandatory compliance date of July 1, 2021. On April 27, 2021, the Bureau issued a final rule effective June 30, 2021, which extended the mandatory compliance date of the final rule published on December 29, 2020, at 85 FR 86308, until October 1, 2022. 86 FR 22844 (Apr. 30, 2021).

percentage points for a first-lien covered transaction with a loan amount greater than or equal to $110,260 (indexed for inflation); 3.5 or more percentage points for a first-lien covered transaction with a loan amount greater than or equal to $66,156 (indexed for inflation) but less than $110,260 (indexed for inflation); 6.5 or more percentage points for a first-lien covered transaction with a loan amount less than $66,156 (indexed for inflation); 6.5 or more percentage points for a first-lien covered transaction secured by a manufactured home with a loan amount less than $110,260 (indexed for inflation); 3.5 or more percentage points for a subordinate-lien covered transaction with a loan amount greater than or equal to $66,156 (indexed for inflation); or 6.5 or more percentage points for a subordinate-lien covered transaction with a loan amount less than $66,156 (indexed for inflation).[8] The rule states that the loan amounts in § 1026.43(e)(2)(vi) will be adjusted annually on January 1 by the annual percentage change in the CPI–U that was in effect on the preceding June 1.[9] Section 1026.43(e)(2)(vi) of Regulation Z is also amended to add a cross-reference to the official commentary of Regulation Z where historical threshold dollar amounts for § 1026.43(e)(2)(vi)(A) through (F) can be located. This change to the regulatory text will assist creditors in locating the applicable threshold adjustments.

Regulation Z also contains points and fees limits applicable to all categories of QMs. Under § 1026.43(e)(3)(i), a covered transaction is not a QM if the transaction's total points and fees exceed: 3 percent of the total loan amount for a loan amount greater than or equal to $100,000; $3,000 for a loan amount greater than or equal to $60,000 but less than $100,000; 5 percent of the total loan amount for loans greater than or equal to $20,000 but less than $60,000; $1,000 for a loan amount greater than or equal to $12,500 but less than $20,000; or 8 percent of the total loan amount for loans less than $12,500. Section 1026.43(e)(3)(ii) provides that the limits and loan amounts in § 1026.43(e)(3)(i) will be recalculated annually for inflation using the CPI–U index in effect on the preceding June 1.

The 2022 adjustment to the loan amounts applicable to the pricing thresholds for the General QM loan definition and the points and fees limits for all categories of QM is based on the CPI–U index in effect on June 1, 2021, which was reported by BLS on May 12, 2021, and reflects the percentage change from April 2020 to April 2021. The adjustment to the 2021 figures[10] being adopted here reflects a 4.2 percent increase in the CPI–U index for this period and is rounded to whole dollars for ease of compliance.

II. Adjustment and Commentary Revision

A. Credit Card Annual Adjustments

Minimum Interest Charge Disclosure Thresholds—§§ 1026.6(b)(2)(iii) and 1026.60(b)(3)

The minimum interest charge amounts for §§ 1026.6(b)(2)(iii) and 1026.60(b)(3) will remain unchanged at $1.00 for the year 2022. Accordingly, the Bureau is not amending these sections of Regulation Z.

Safe Harbor Penalty Fees—§ 1026.52(b)(1)(ii)(A) and (B)

Effective January 1, 2022, the permissible fee threshold amounts increased from the amounts for 2021 to $30 for § 1026.52(b)(1)(ii)(A) and to $41 for § 1026.52(b)(1)(ii)(B). Accordingly, the Bureau is amending § 1026.52(b)(1)(ii)(A) and (B). The Bureau is amending comment 52(b)(1)(ii)–2.i to preserve a list of the historical thresholds for this provision.

B. HOEPA Annual Threshold Adjustment—Comments 32(a)(1)(ii)–1 and –3

Effective January 1, 2022, for purposes of determining under § 1026.32(a)(1)(ii) the points-and-fees coverage test under HOEPA to which a transaction is subject, the total loan amount threshold is $22,969, and the adjusted points-and-fees dollar trigger under § 1026.32(a)(1)(ii)(B) is $1,148. If the total loan amount for a transaction is $22,969 or more, and the points-and-fees amount exceeds 5 percent of the total loan amount, the transaction is a high-cost mortgage. If the total loan amount for a transaction is less than $22,969, and the points-and-fees amount exceeds the lesser of the adjusted points-and-fees dollar trigger of $1,148 or 8 percent of the total loan amount, the transaction is a high-cost mortgage. The Bureau is amending comments 32(a)(1)(ii)–1 and –3, which list the adjustments for each year, to reflect for 2022 the new points-and-fees dollar trigger and the new loan amount dollar threshold, respectively.

C. Qualified Mortgages Annual Threshold Adjustments

Effective January 1, 2022, to satisfy § 1026.43(e)(2)(vi) under the General QM loan definition, the APR may not exceed the average prime offer rate for a comparable transaction as of the date the interest rate is set by the following amounts: 2.25 or more percentage points for a first-lien covered transaction with a loan amount greater than or equal to $114,847; 3.5 or more percentage points for a first-lien covered transaction with a loan amount greater than or equal to $68,908 but less than $114,847; 6.5 or more percentage points for a first-lien covered transaction with a loan amount less than $68,908; 6.5 or more percentage points for a first-lien covered transaction secured by a manufactured home with a loan amount less than $114,847; 3.5 or more percentage points for a subordinate-lien covered transaction with a loan amount greater than or equal to $68,908; or 6.5 or more percentage points for a subordinate-lien covered transaction with a loan amount less than $68,908. Accordingly, the Bureau is amending comment 43(e)(2)(vi)–3, which lists the adjustments for each year, to reflect the new dollar threshold amounts for § 1026.43(e)(2)(vi)(A) through (F).

Effective January 1, 2022, a covered transaction is not a qualified mortgage if, pursuant to § 1026.43(e)(3), the transaction's total points and fees exceed 3 percent of the total loan amount for a loan amount greater than or equal to $114,847; $3,445 for a loan amount greater than or equal to $68,908 but less than $114,847; 5 percent of the total loan amount for loans greater than or equal to $22,969 but less than $68,908; $1,148 for a loan amount greater than or equal to $14,356 but less than $22,969; or 8 percent of the total loan amount for loans less than $14,356. The Bureau is amending comment 43(e)(3)(ii)–1, which lists the

[8] The loan amounts in the regulatory text reflect the CPI–U in effect on June 1, 2020.

[9] *See* comment 43(e)(2)(vi)–3.

[10] For 2022, a covered transaction is a qualified mortgage if the APR does not exceed the APOR for a comparable transaction as of the date the interest rate is set by: 2.25 or more percentage points for a first-lien covered transaction with a loan amount greater than or equal to $114,847; 3.5 or more percentage points for a first-lien covered transaction with a loan amount greater than or equal to $68,908 but less than $114,847; 6.5 or more percentage points for a first-lien covered transaction with a loan amount less than $68,908; 6.5 or more percentage points for a first-lien covered transaction secured by a manufactured home with a loan amount less than $114,847; 3.5 or more percentage points for a subordinate-lien covered transaction with a loan amount greater than or equal to $68,908; or 6.5 or more percentage points for a subordinate-lien covered transaction with a loan amount less than $68,908. Additionally, a covered transaction is not a qualified mortgage if the transaction's total points and fees exceed 3 percent of the total loan amount for a loan amount greater than or equal to $114,847; $3,445 for a loan amount greater than or equal to $68,908 but less than $114,847; 5 percent of the total loan amount for loans greater than or equal to $22,969 but less than $68,908; $1,148 for a loan amount greater than or equal to $14,356 but less than $22,969; or 8 percent of the total loan amount for loans less than $14,356.

adjustments for each year, to reflect the new dollar threshold amounts for 2022.

III. Procedural Requirements

A. Administrative Procedure Act

Under the Administrative Procedure Act, notice and opportunity for public comment are not required if the Bureau finds that notice and public comment are impracticable, unnecessary, or contrary to the public interest.[11] Pursuant to this final rule, in Regulation Z, § 1026.52(b)(1)(ii)(A) and (B) in subpart G is amended and comments 32(a)(1)(ii)–1.vii and –3.vii, 43(e)(3)(ii)–1.vii, and 52(b)(1)(ii)–2.i.H in Supplement I are added to update the exemption thresholds. The amendments in this final rule are technical and non-discretionary, as they merely apply the method previously established in Regulation Z for determining adjustments to the thresholds. Section 1026.43(e)(2)(vi) of Regulation Z is also amended to add a cross-reference to the official commentary of Regulation Z where historical threshold dollar amounts for § 1026.43(e)(2)(vi)(A) through (F) can be located. This amendment is technical and for informational purposes only, as it merely provides a cross-reference to existing commentary that will list current and past threshold adjustments already required by Regulation Z. For these reasons, the Bureau has determined that publishing a notice of proposed rulemaking and providing opportunity for public comment are unnecessary. The amendments therefore are adopted in final form.

B. Regulatory Flexibility Act

Because no notice of proposed rulemaking is required, the Regulatory Flexibility Act does not require an initial or final regulatory flexibility analysis.[12]

C. Paperwork Reduction Act

In accordance with the Paperwork Reduction Act of 1995,[13] the Bureau reviewed this final rule. No collections of information pursuant to the Paperwork Reduction Act are contained in the final rule.

D. Congressional Review Act

Pursuant to the Congressional Review Act (5 U.S.C. 801 *et seq.*), the Bureau will submit a report containing this rule and other required information to the United States Senate, the United States House of Representatives, and the Comptroller General of the United States prior to the rule taking effect. The Office of Information and Regulatory Affairs (OIRA) has designated this rule as not a ''major rule'' as defined by 5 U.S.C. 804(2).

E. Signing Authority

The Associate Director of Research, Markets, and Regulations, Janis K. Pappalardo, having reviewed and approved this document, is delegating the authority to electronically sign this document to Laura Galban, Bureau **Federal Register** Liaison, for purposes of publication in the **Federal Register**.

List of Subjects in 12 CFR Part 1026

Advertising, Banks, Banking, Consumer protection, Credit, Credit unions, Mortgages, National banks, Reporting and recordkeeping requirements, Savings associations, Truth-in-lending.

Authority and Issuance

For the reasons set forth in the preamble, the Bureau amends Regulation Z, 12 CFR part 1026, as set forth below:

PART 1026—TRUTH IN LENDING (REGULATION Z)

■ 1. The authority citation for part 1026 continues to read as follows:

Authority: 12 U.S.C. 2601, 2603–2605, 2607, 2609, 2617, 3353, 5511, 5512, 5532, 5581; 15 U.S.C. 1601 *et seq.*

Subpart E—Special Rules for Certain Home Mortgage Transactions

■ 2. Amend § 1026.43 by revising paragraph (e)(2)(vi) introductory text to read as follows:

§ 1026.43 Minimum standards for transactions secured by a dwelling.

* * * * *

(e) * * *

(2) * * *

(vi) For which the annual percentage rate does not exceed the average prime offer rate for a comparable transaction as of the date the interest rate is set by the amounts specified in paragraphs (e)(2)(vi)(A) through (F) of this section. The amounts specified here shall be adjusted annually on January 1 by the annual percentage change in the Consumer Price Index for All Urban Consumers (CPI–U) that was reported on the preceding June 1. For purposes of this paragraph (e)(2)(vi), the creditor must determine the annual percentage rate for a loan for which the interest rate may or will change within the first five years after the date on which the first regular periodic payment will be due by treating the maximum interest rate that may apply during that five-year period as the interest rate for the full term of the loan. See the official commentary to this paragraph (e)(2)(vi) for the current dollar amounts.

* * * * *

Subpart G—Special Rules Applicable to Credit Card Accounts and Open-End Credit Offered to College Students

■ 3. Amend § 1026.52 by revising paragraphs (b)(1)(ii)(A) and (B) to read as follows:

§ 1026.52 Limitations on fees.

* * * * *

(b) * * *

(1) * * *

(ii) * * *

(A) $30;

(B) $41 if the card issuer previously imposed a fee pursuant to paragraph (b)(1)(ii)(A) of this section for a violation of the same type that occurred during the same billing cycle or one of the next six billing cycles; or

* * * * *

■ 4. In Supplement I to part 1026:

■ a. Under *Section 1026.32—Requirements for High-Cost Mortgages, Paragraph 32(a)(1)(ii)* is revised.

■ b. Under *Section 1026.43—Minimum Standards for Transactions Secured by a Dwelling, Paragraphs 43(e)(2)(vi) and 43(e)(3)(ii)* are revised.

■ c. Under *Section 1026.52—Limitations on Fees, 52(b)(1)(ii) Safe harbors* is revised.

The revisions read as follows:

Supplement I to Part 1026—Official Interpretations

* * * * *

Section 1026.32—Requirements for High-Cost Mortgages

* * * * *

Paragraph 32(a)(1)(ii).

1. *Annual adjustment of $1,000 amount.* The $1,000 figure in § 1026.32(a)(1)(ii)(B) is adjusted annually on January 1 by the annual percentage change in the CPI that was in effect on the preceding June 1. The Bureau will publish adjustments after the June figures become available each year.

i. For 2015, $1,020, reflecting a 2 percent increase in the CPI–U from June 2013 to June 2014, rounded to the nearest whole dollar.

ii. For 2016, $1,017, reflecting a 0.2 percent decrease in the CPI–U from June 2014 to June 2015, rounded to the nearest whole dollar.

iii. For 2017, $1,029, reflecting a 1.1 percent increase in the CPI–U from June 2015 to June 2016, rounded to the nearest whole dollar.

iv. For 2018, $1,052, reflecting a 2.2 percent increase in the CPI–U from June 2016 to June 2017, rounded to the nearest whole dollar.

v. For 2019, $1,077, reflecting a 2.5 percent increase in the CPI–U from June 2017 to June 2018, rounded to the nearest whole dollar.

[11] 5 U.S.C. 553(b)(B).

[12] 5 U.S.C. 603(a), 604(a).

[13] 44 U.S.C. 3506; 5 CFR part 1320.

vi. For 2020, $1,099, reflecting a 2 percent increase in the CPI–U from June 2018 to June 2019, rounded to the nearest whole dollar.

vii. For 2021, $1,103, reflecting a 0.3 percent increase in the CPI–U from June 2019 to June 2020, rounded to the nearest whole dollar.

viii. For 2022, $1,148, reflecting a 4.2 percent increase in the CPI–U from June 2020 to June 2021, rounded to the nearest whole dollar.

2. *Historical adjustment of $400 amount.* Prior to January 10, 2014, a mortgage loan was covered by § 1026.32 if the total points and fees payable by the consumer at or before loan consummation exceeded the greater of $400 or 8 percent of the total loan amount. The $400 figure was adjusted annually on January 1 by the annual percentage change in the CPI that was in effect on the preceding June 1, as follows:

i. For 1996, $412, reflecting a 3 percent increase in the CPI–U from June 1994 to June 1995, rounded to the nearest whole dollar.

ii. For 1997, $424, reflecting a 2.9 percent increase in the CPI–U from June 1995 to June 1996, rounded to the nearest whole dollar.

iii. For 1998, $435, reflecting a 2.5 percent increase in the CPI–U from June 1996 to June 1997, rounded to the nearest whole dollar.

iv. For 1999, $441, reflecting a 1.4 percent increase in the CPI–U from June 1997 to June 1998, rounded to the nearest whole dollar.

v. For 2000, $451, reflecting a 2.3 percent increase in the CPI–U from June 1998 to June 1999, rounded to the nearest whole dollar.

vi. For 2001, $465, reflecting a 3.1 percent increase in the CPI–U from June 1999 to June 2000, rounded to the nearest whole dollar.

vii. For 2002, $480, reflecting a 3.27 percent increase in the CPI–U from June 2000 to June 2001, rounded to the nearest whole dollar.

viii. For 2003, $488, reflecting a 1.64 percent increase in the CPI–U from June 2001 to June 2002, rounded to the nearest whole dollar.

ix. For 2004, $499, reflecting a 2.22 percent increase in the CPI–U from June 2002 to June 2003, rounded to the nearest whole dollar.

x. For 2005, $510, reflecting a 2.29 percent increase in the CPI–U from June 2003 to June 2004, rounded to the nearest whole dollar.

xi. For 2006, $528, reflecting a 3.51 percent increase in the CPI–U from June 2004 to June 2005, rounded to the nearest whole dollar.

xii. For 2007, $547, reflecting a 3.55 percent increase in the CPI–U from June 2005 to June 2006, rounded to the nearest whole dollar.

xiii. For 2008, $561, reflecting a 2.56 percent increase in the CPI–U from June 2006 to June 2007, rounded to the nearest whole dollar.

xiv. For 2009, $583, reflecting a 3.94 percent increase in the CPI–U from June 2007 to June 2008, rounded to the nearest whole dollar.

xv. For 2010, $579, reflecting a 0.74 percent decrease in the CPI–U from June 2008 to June 2009, rounded to the nearest whole dollar.

xvi. For 2011, $592, reflecting a 2.2 percent increase in the CPI–U from June 2009 to June 2010, rounded to the nearest whole dollar.

xvii. For 2012, $611, reflecting a 3.2 percent increase in the CPI–U from June 2010 to June 2011, rounded to the nearest whole dollar.

xviii. For 2013, $625, reflecting a 2.3 percent increase in the CPI–U from June 2011 to June 2012, rounded to the nearest whole dollar.

xix. For 2014, $632, reflecting a 1.1 percent increase in the CPI–U from June 2012 to June 2013, rounded to the nearest whole dollar.

3. *Applicable threshold.* For purposes of § 1026.32(a)(1)(ii), a creditor must determine the applicable points and fees threshold based on the face amount of the note (or, in the case of an open-end credit plan, the credit limit for the plan when the account is opened). However, the creditor must apply the allowable points and fees percentage to the ''total loan amount,'' as defined in § 1026.32(b)(4). For closed-end credit transactions, the total loan amount may be different than the face amount of the note. The $20,000 amount in § 1026.32(a)(1)(ii)(A) and (B) is adjusted annually on January 1 by the annual percentage change in the CPI that was in effect on the preceding June 1.

i. For 2015, $20,391, reflecting a 2 percent increase in the CPI–U from June 2013 to June 2014, rounded to the nearest whole dollar.

ii. For 2016, $20,350, reflecting a .2 percent decrease in the CPI–U from June 2014 to June 2015, rounded to the nearest whole dollar.

iii. For 2017, $20,579, reflecting a 1.1 percent increase in the CPI–U from June 2015 to June 2016, rounded to the nearest whole dollar.

iv. For 2018, $21,032, reflecting a 2.2 percent increase in the CPI–U from June 2016 to June 2017, rounded to the nearest whole dollar.

v. For 2019, $21,549, reflecting a 2.5 percent increase in the CPI–U from June 2017 to June 2018, rounded to the nearest whole dollar.

vi. For 2020, $21,980, reflecting a 2 percent increase in the CPI–U from June 2018 to June 2019, rounded to the nearest whole dollar.

vii. For 2021, $22,052 reflecting a 0.3 percent increase in the CPI–U from June 2019 to June 2020, rounded to the nearest whole dollar.

viii. For 2022, $22,969 reflecting a 4.2 percent increase in the CPI–U from June 2020 to June 2021, rounded to the nearest whole dollar.

* * * * *

Section 1026.43—Minimum Standards for Transactions Secured by a Dwelling

* * * * *

Paragraph 43(e)(2)(vi).

1. *Determining the average prime offer rate for a comparable transaction as of the date the interest rate is set.* For guidance on determining the average prime offer rate for a comparable transaction as of the date the interest rate is set, see comments 43(b)(4)–1 through –3.

2. *Determination of applicable threshold.* A creditor must determine the applicable threshold by determining which category the loan falls into based on the face amount of the note (the ''loan amount'' as defined in § 1026.43(b)(5)). For example, for a first-lien covered transaction with a loan amount of $75,000, the loan would fall into the tier for loans greater than or equal to $66,156 (indexed for inflation) but less than $110,260 (indexed for inflation), for which the applicable threshold is 3.5 or more percentage points.

3. *Annual adjustment for inflation.* The dollar amounts in § 1026.43(e)(2)(vi) will be adjusted annually on January 1 by the annual percentage change in the CPI–U that was in effect on the preceding June 1. The Bureau will publish adjustments after the June figures become available each year.

i. For 2022, reflecting a 4.2 percent increase in the CPI–U that was reported on the preceding June 1, to satisfy § 1026.43(e)(2)(vi), the annual percentage rate may not exceed the average prime offer rate for a comparable transaction as of the date the interest rate is set by the following amounts:

A. For a first-lien covered transaction with a loan amount greater than or equal to $114,847, 2.25 or more percentage points;

B. For a first-lien covered transaction with a loan amount greater than or equal to $68,908 but less than $114,847, 3.5 or more percentage points;

C. For a first-lien covered transaction with a loan amount less than $68,908, 6.5 or more percentage points;

D. For a first-lien covered transaction secured by a manufactured home with a loan amount less than $114,847, 6.5 or more percentage points;

E. For a subordinate-lien covered transaction with a loan amount greater than or equal to $68,908, 3.5 or more percentage points;

F. For a subordinate-lien covered transaction with a loan amount less than $68,908, 6.5 or more percentage points.

4. *Determining the annual percentage rate for certain loans for which the interest rate may or will change.*

i. *In general.* The commentary to § 1026.17(c)(1) and other provisions in subpart C of this part address how to determine the annual percentage rate disclosures for closed-end credit transactions. Provisions in § 1026.32(a)(3) address how to determine the annual percentage rate to determine coverage under § 1026.32(a)(1)(i). Section 1026.43(e)(2)(vi) requires, for the purposes of § 1026.43(e)(2)(vi), a different determination of the annual percentage rate for a qualified mortgage under § 1026.43(e)(2) for which the interest rate may or will change within the first five years after the date on which the first regular periodic payment will be due. An identical special rule for determining the annual percentage rate for such a loan also applies for purposes of § 1026.43(b)(4).

ii. *Loans for which the interest rate may or will change.* Section 1026.43(e)(2)(vi) includes a special rule for determining the annual percentage rate for a loan for which the interest rate may or will change within the first five years after the date on which the first regular periodic payment will be due. This rule applies to adjustable-rate mortgages that have a fixed-rate period of five years or less and to step-rate mortgages for which the interest rate changes within that five-year period.

iii. *Maximum interest rate during the first five years.* For a loan for which the interest rate may or will change within the first five

years after the date on which the first regular periodic payment will be due, a creditor must treat the maximum interest rate that could apply at any time during that five-year period as the interest rate for the full term of the loan to determine the annual percentage rate for purposes of § 1026.43(e)(2)(vi), regardless of whether the maximum interest rate is reached at the first or subsequent adjustment during the five-year period. For additional instruction on how to determine the maximum interest rate during the first five years after the date on which the first regular periodic payment will be due, see comments 43(e)(2)(iv)–3 and –4.

iv. *Treatment of the maximum interest rate in determining the annual percentage rate.* For a loan for which the interest rate may or will change within the first five years after the date on which the first regular periodic payment will be due, the creditor must determine the annual percentage rate for purposes of § 1026.43(e)(2)(vi) by treating the maximum interest rate that may apply within the first five years as the interest rate for the full term of the loan. For example, assume an adjustable-rate mortgage with a loan term of 30 years and an initial discounted rate of 5.0 percent that is fixed for the first three years. Assume that the maximum interest rate during the first five years after the date on which the first regular periodic payment will be due is 7.0 percent. Pursuant to § 1026.43(e)(2)(vi), the creditor must determine the annual percentage rate based on an interest rate of 7.0 percent applied for the full 30-year loan term.

5. *Meaning of a manufactured home.* For purposes of § 1026.43(e)(2)(vi)(D), manufactured home means any residential structure as defined under regulations of the U.S. Department of Housing and Urban Development (HUD) establishing manufactured home construction and safety standards (24 CFR 3280.2). Modular or other factory-built homes that do not meet the HUD code standards are not manufactured homes for purposes of § 1026.43(e)(2)(vi)(D).

6. *Scope of threshold for transactions secured by a manufactured home.* The threshold in § 1026.43(e)(2)(vi)(D) applies to first-lien covered transactions less than $110,260 (indexed for inflation) that are secured by a manufactured home and land, or by a manufactured home only.

* * * * *

Paragraph 43(e)(3)(ii).

1. *Annual adjustment for inflation.* The dollar amounts, including the loan amounts, in § 1026.43(e)(3)(i) will be adjusted annually on January 1 by the annual percentage change in the CPI–U that was in effect on the preceding June 1. The Bureau will publish adjustments after the June figures become available each year.

i. For 2015, reflecting a 2 percent increase in the CPI–U that was reported on the preceding June 1, a covered transaction is not a qualified mortgage unless the transactions total points and fees do not exceed;

A. For a loan amount greater than or equal to $101,953: 3 percent of the total loan amount;

B. For a loan amount greater than or equal to $61,172 but less than $101,953: $3,059;

C. For a loan amount greater than or equal to $20,391 but less than $61,172: 5 percent of the total loan amount;

D. For a loan amount greater than or equal to $12,744 but less than $20,391; $1,020;

E. For a loan amount less than $12,744: 8 percent of the total loan amount.

ii. For 2016, reflecting a 0.2 percent decrease in the CPI–U that was reported on the preceding June 1, a covered transaction is not a qualified mortgage unless the transactions total points and fees do not exceed;

A. For a loan amount greater than or equal to $101,749: 3 percent of the total loan amount;

B. For a loan amount greater than or equal to $61,050 but less than $101,749: $3,052;

C. For a loan amount greater than or equal to $20,350 but less than $61,050: 5 percent of the total loan amount;

D. For a loan amount greater than or equal to $12,719 but less than $20,350; $1,017;

E. For a loan amount less than $12,719: 8 percent of the total loan amount.

iii. For 2017, reflecting a 1.1 percent increase in the CPI–U that was reported on the preceding June 1, a covered transaction is not a qualified mortgage unless the transactions total points and fees do not exceed:

A. For a loan amount greater than or equal to $102,894: 3 percent of the total loan amount;

B. For a loan amount greater than or equal to $61,737 but less than $102,894: $3,087;

C. For a loan amount greater than or equal to $20,579 but less than $61,737: 5 percent of the total loan amount;

D. For a loan amount greater than or equal to $12,862 but less than $20,579: $1,029;

E. For a loan amount less than $12,862: 8 percent of the total loan amount.

iv. For 2018, reflecting a 2.2 percent increase in the CPI–U that was reported on the preceding June 1, a covered transaction is not a qualified mortgage unless the transaction's total points and fees do not exceed:

A. For a loan amount greater than or equal to $105,158: 3 percent of the total loan amount;

B. For a loan amount greater than or equal to $63,095 but less than $105,158: $3,155;

C. For a loan amount greater than or equal to $21,032 but less than $63,095: 5 percent of the total loan amount;

D. For a loan amount greater than or equal to $13,145 but less than $21,032: $1,052;

E. For a loan amount less than $13,145: 8 percent of the total loan amount.

v. For 2019, reflecting a 2.5 percent increase in the CPI–U that was reported on the preceding June 1, a covered transaction is not a qualified mortgage unless the transaction's total points and fees do not exceed:

A. For a loan amount greater than or equal to $107,747: 3 percent of the total loan amount;

B. For a loan amount greater than or equal to $64,648 but less than $107,747: $3,232;

C. For a loan amount greater than or equal to $21,549 but less than $64,648: 5 percent of the total loan amount;

D. For a loan amount greater than or equal to $13,468 but less than $21,549: $1,077;

E. For a loan amount less than $13,468: 8 percent of the total loan amount.

vi. For 2020, reflecting a 2 percent increase in the CPI–U that was reported on the preceding June 1, a covered transaction is not a qualified mortgage unless the transaction's total points and fees do not exceed:

A. For a loan amount greater than or equal to $109,898: 3 percent of the total loan amount;

B. For a loan amount greater than or equal to $65,939 but less than $109,898: $3,297;

C. For a loan amount greater than or equal to $21,980 but less than $65,939: 5 percent of the total loan amount;

D. For a loan amount greater than or equal to $13,737 but less than $21,980: $1,099;

E. For a loan amount less than $13,737: 8 percent of the total loan amount.

vii. For 2021, reflecting a 0.3 percent increase in the CPI–U that was reported on the preceding June 1, a covered transaction is not a qualified mortgage unless the transaction's total points and fees do not exceed:

A. For a loan amount greater than or equal to $110,260: 3 percent of the total loan amount;

B. For a loan amount greater than or equal to $66,156 but less than $110,260: $3,308;

C. For a loan amount greater than or equal to $22,052 but less than $66,156: 5 percent of the total loan amount;

D. For a loan amount greater than or equal to $13,783 but less than $22,052: $1,103;

E. For a loan amount less than $13,783: 8 percent of the total loan amount.

viii. For 2022, reflecting a 4.2 percent increase in the CPI–U that was reported on the preceding June 1, a covered transaction is not a qualified mortgage unless the transaction's total points and fees do not exceed:

A. For a loan amount greater than or equal to $114,847: 3 percent of the total loan amount;

B. For a loan amount greater than or equal to $68,908 but less than $114,847: $3,445;

C. For a loan amount greater than or equal to $22,969 but less than $68,908: 5 percent of the total loan amount;

D. For a loan amount greater than or equal to $14,356 but less than $22,969: $1,148;

E. For a loan amount less than $14,356: 8 percent of the total loan amount.

* * * * *

Section 1026.52—Limitations on Fees

* * * * *

52(b)(1)(ii) Safe Harbors

1. *Multiple violations of same type.* i. *Same billing cycle or next six billing cycles.* A card issuer cannot impose a fee for a violation pursuant to § 1026.52(b)(1)(ii)(B) unless a fee has previously been imposed for the same type of violation pursuant to § 1026.52(b)(1)(ii)(A). Once a fee has been imposed for a violation pursuant to § 1026.52(b)(1)(ii)(A), the card issuer may impose a fee pursuant to § 1026.52(b)(1)(ii)(B) for any subsequent violation of the same type until that type of violation has not occurred for a period of six consecutive complete billing cycles. A fee has been imposed for purposes of § 1026.52(b)(1)(ii) even if the

card issuer waives or rebates all or part of the fee.

A. *Late payments.* For purposes of § 1026.52(b)(1)(ii), a late payment occurs during the billing cycle in which the payment may first be treated as late consistent with the requirements of this part and the terms or other requirements of the account.

B. *Returned payments.* For purposes of § 1026.52(b)(1)(ii), a returned payment occurs during the billing cycle in which the payment is returned to the card issuer.

C. *Transactions that exceed the credit limit.* For purposes of § 1026.52(b)(1)(ii), a transaction that exceeds the credit limit for an account occurs during the billing cycle in which the transaction occurs or is authorized by the card issuer.

D. *Declined access checks.* For purposes of § 1026.52(b)(1)(ii), a check that accesses a credit card account is declined during the billing cycle in which the card issuer declines payment on the check.

ii. *Relationship to §§ 1026.52(b)(2)(ii) and 1026.56(j)(1).* If multiple violations are based on the same event or transaction such that § 1026.52(b)(2)(ii) prohibits the card issuer from imposing more than one fee, the event or transaction constitutes a single violation for purposes of § 1026.52(b)(1)(ii). Furthermore, consistent with § 1026.56(j)(1)(i), no more than one violation for exceeding an account's credit limit can occur during a single billing cycle for purposes of § 1026.52(b)(1)(ii). However, § 1026.52(b)(2)(ii) does not prohibit a card issuer from imposing fees for exceeding the credit limit in consecutive billing cycles based on the same over-the-limit transaction to the extent permitted by § 1026.56(j)(1). In these circumstances, the second and third over-the-limit fees permitted by § 1026.56(j)(1) may be imposed pursuant to § 1026.52(b)(1)(ii)(B). *See* comment 52(b)(2)(ii)–1.

iii. *Examples.* The following examples illustrate the application of § 1026.52(b)(1)(ii)(A) and (b)(1)(ii)(B) with respect to credit card accounts under an open-end (not home-secured) consumer credit plan that are not charge card accounts. For purposes of these examples, assume that the billing cycles for the account begin on the first day of the month and end on the last day of the month and that the payment due date for the account is the twenty-fifth day of the month.

A. *Violations of same type (late payments).* A required minimum periodic payment of $50 is due on March 25. On March 26, a late payment has occurred because no payment has been received. Accordingly, consistent with § 1026.52(b)(1)(ii)(A), the card issuer imposes a $25 late payment fee on March 26. In order for the card issuer to impose a $35 late payment fee pursuant to § 1026.52(b)(1)(ii)(B), a second late payment must occur during the April, May, June, July, August, or September billing cycles.

1. The card issuer does not receive any payment during the March billing cycle. A required minimum periodic payment of $100 is due on April 25. On April 20, the card issuer receives a $50 payment. No further payment is received during the April billing cycle. Accordingly, consistent with § 1026.52(b)(1)(ii)(B), the card issuer may impose a $35 late payment fee on April 26. Furthermore, the card issuer may impose a $35 late payment fee for any late payment that occurs during the May, June, July, August, September, or October billing cycles.

2. Same facts as in paragraph A above. On March 30, the card issuer receives a $50 payment and the required minimum periodic payments for the April, May, June, July, August, and September billing cycles are received on or before the payment due date. A required minimum periodic payment of $60 is due on October 25. On October 26, a late payment has occurred because the required minimum periodic payment due on October 25 has not been received. However, because this late payment did not occur during the six billing cycles following the March billing cycle, § 1026.52(b)(1)(ii) only permits the card issuer to impose a late payment fee of $25.

B. *Violations of different types (late payment and over the credit limit).* The credit limit for an account is $1,000. Consistent with § 1026.56, the consumer has affirmatively consented to the payment of transactions that exceed the credit limit. A required minimum periodic payment of $30 is due on August 25. On August 26, a late payment has occurred because no payment has been received. Accordingly, consistent with § 1026.52(b)(1)(ii)(A), the card issuer imposes a $25 late payment fee on August 26. On August 30, the card issuer receives a $30 payment. On September 10, a transaction causes the account balance to increase to $1,150, which exceeds the account's $1,000 credit limit. On September 11, a second transaction increases the account balance to $1,350. On September 23, the card issuer receives the $50 required minimum periodic payment due on September 25, which reduces the account balance to $1,300. On September 30, the card issuer imposes a $25 over-the-limit fee, consistent with § 1026.52(b)(1)(ii)(A). On October 26, a late payment has occurred because the $60 required minimum periodic payment due on October 25 has not been received. Accordingly, consistent with § 1026.52(b)(1)(ii)(B), the card issuer imposes a $35 late payment fee on October 26.

C. *Violations of different types (late payment and returned payment).* A required minimum periodic payment of $50 is due on July 25. On July 26, a late payment has occurred because no payment has been received. Accordingly, consistent with § 1026.52(b)(1)(ii)(A), the card issuer imposes a $25 late payment fee on July 26. On July 30, the card issuer receives a $50 payment. A required minimum periodic payment of $50 is due on August 25. On August 24, a $50 payment is received. On August 27, the $50 payment is returned to the card issuer for insufficient funds. In these circumstances, § 1026.52(b)(2)(ii) permits the card issuer to impose either a late payment fee or a returned payment fee but not both because the late payment and the returned payment result from the same event or transaction. Accordingly, for purposes of § 1026.52(b)(1)(ii), the event or transaction constitutes a single violation. However, if the card issuer imposes a late payment fee, § 1026.52(b)(1)(ii)(B) permits the issuer to impose a fee of $35 because the late payment occurred during the six billing cycles following the July billing cycle. In contrast, if the card issuer imposes a returned payment fee, the amount of the fee may be no more than $25 pursuant to § 1026.52(b)(1)(ii)(A).

2. *Adjustments based on Consumer Price Index.* For purposes of § 1026.52(b)(1)(ii)(A) and (b)(1)(ii)(B), the Bureau shall calculate each year price level adjusted amounts using the Consumer Price Index in effect on June 1 of that year. When the cumulative change in the adjusted minimum value derived from applying the annual Consumer Price level to the current amounts in § 1026.52(b)(1)(ii)(A) and (b)(1)(ii)(B) has risen by a whole dollar, those amounts will be increased by $1.00. Similarly, when the cumulative change in the adjusted minimum value derived from applying the annual Consumer Price level to the current amounts in § 1026.52(b)(1)(ii)(A) and (b)(1)(ii)(B) has decreased by a whole dollar, those amounts will be decreased by $1.00. The Bureau will publish adjustments to the amounts in § 1026.52(b)(1)(ii)(A) and (b)(1)(ii)(B).

i. *Historical thresholds.*

A. Card issuers were permitted to impose a fee for violating the terms of an agreement if the fee did not exceed $25 under § 1026.52(b)(1)(ii)(A) and $35 under § 1026.52(b)(1)(ii)(B), through December 31, 2013.

B. Card issuers were permitted to impose a fee for violating the terms of an agreement if the fee did not exceed $26 under § 1026.52(b)(1)(ii)(A) and $37 under § 1026.52(b)(1)(ii)(B), through December 31, 2014.

C. Card issuers were permitted to impose a fee for violating the terms of an agreement if the fee did not exceed $27 under § 1026.52(b)(1)(ii)(A) and $38 under § 1026.52(b)(1)(ii)(B), through December 31, 2015.

D. Card issuers were permitted to impose a fee for violating the terms of an agreement if the fee did not exceed $27 under § 1026.52(b)(1)(ii)(A), through December 31, 2016. Card issuers were permitted to impose a fee for violating the terms of an agreement if the fee did not exceed $37 under § 1026.52(b)(1)(ii)(B), through June 26, 2016, and $38 under § 1026.52(b)(1)(ii)(B) from June 27, 2016 through December 31, 2016.

E. Card issuers were permitted to impose a fee for violating the terms of an agreement if the fee did not exceed $27 under § 1026.52(b)(1)(ii)(A) and $38 under § 1026.52(b)(1)(ii)(B), through December 31, 2017.

F. Card issuers were permitted to impose a fee for violating the terms of an agreement if the fee did not exceed $27 under § 1026.52(b)(1)(ii)(A) and $38 under § 1026.52(b)(1)(ii)(B), through December 31, 2018.

G. Card issuers were permitted to impose a fee for violating the terms of an agreement if the fee did not exceed $28 under § 1026.52(b)(1)(ii)(A) and $39 under § 1026.52(b)(1)(ii)(B), through December 31, 2019.

H. Card issuers were permitted to impose a fee for violating the terms of an agreement

if the fee did not exceed $29 under § 1026.52(b)(1)(ii)(A) and $40 under § 1026.52(b)(1)(ii)(B), through December 31, 2020.

I. Card issuers were permitted to impose a fee for violating the terms of an agreement if the fee did not exceed $29 under § 1026.52(b)(1)(ii)(A) and $40 under § 1026.52(b)(1)(ii)(B), through December 31, 2021.

3. *Delinquent balance for charge card accounts.* Section 1026.52(b)(1)(ii)(C) provides that, when a charge card issuer that requires payment of outstanding balances in full at the end of each billing cycle has not received the required payment for two or more consecutive billing cycles, the card issuer may impose a late payment fee that does not exceed three percent of the delinquent balance. For purposes of § 1026.52(b)(1)(ii)(C), the delinquent balance is any previously billed amount that remains unpaid at the time the late payment fee is imposed pursuant to § 1026.52(b)(1)(ii)(C). Consistent with § 1026.52(b)(2)(ii), a charge card issuer that imposes a fee pursuant to § 1026.52(b)(1)(ii)(C) with respect to a late payment may not impose a fee pursuant to § 1026.52(b)(1)(ii)(B) with respect to the same late payment. The following examples illustrate the application of § 1026.52(b)(1)(ii)(C):

i. Assume that a charge card issuer requires payment of outstanding balances in full at the end of each billing cycle and that the billing cycles for the account begin on the first day of the month and end on the last day of the month. At the end of the June billing cycle, the account has a balance of $1,000. On July 5, the card issuer provides a periodic statement disclosing the $1,000 balance consistent with § 1026.7. During the July billing cycle, the account is used for $300 in transactions, increasing the balance to $1,300. At the end of the July billing cycle, no payment has been received and the card issuer imposes a $25 late payment fee consistent with § 1026.52(b)(1)(ii)(A). On August 5, the card issuer provides a periodic statement disclosing the $1,325 balance consistent with § 1026.7. During the August billing cycle, the account is used for $200 in transactions, increasing the balance to $1,525. At the end of the August billing cycle, no payment has been received. Consistent with § 1026.52(b)(1)(ii)(C), the card issuer may impose a late payment fee of $40, which is 3% of the $1,325 balance that was due at the end of the August billing cycle. Section 1026.52(b)(1)(ii)(C) does not permit the card issuer to include the $200 in transactions that occurred during the August billing cycle.

ii. Same facts as above except that, on August 25, a $100 payment is received. Consistent with § 1026.52(b)(1)(ii)(C), the card issuer may impose a late payment fee of $37, which is 3% of the unpaid portion of the $1,325 balance that was due at the end of the August billing cycle ($1,225).

iii. Same facts as in paragraph A above except that, on August 25, a $200 payment is received. Consistent with § 1026.52(b)(1)(ii)(C), the card issuer may impose a late payment fee of $34, which is 3% of the unpaid portion of the $1,325 balance that was due at the end of the August billing cycle ($1,125). In the alternative, the card issuer may impose a late payment fee of $35 consistent with § 1026.52(b)(1)(ii)(B). However, § 1026.52(b)(2)(ii) prohibits the card issuer from imposing both fees.

* * * * *

Dated: October 25, 2021.

Laura Galban,

Federal Register Liaison, Bureau of Consumer Financial Protection.

[FR Doc. 2021–23478 Filed 11–1–21; 8:45 am]

BILLING CODE 4810–AM–P

DEPARTMENT OF TRANSPORTATION

Federal Aviation Administration

14 CFR Part 39

[Docket No. FAA–2021–0885; Project Identifier MCAI–2021–00966–R; Amendment 39–21786; AD 2021–22–13]

RIN 2120–AA64

Airworthiness Directives; Leonardo S.p.a. Helicopters

AGENCY: Federal Aviation Administration (FAA), DOT.

ACTION: Final rule; request for comments.

SUMMARY: The FAA is adopting a new airworthiness directive (AD) for certain Leonardo S.p.a. Model AB139 and AW139 helicopters. This AD was prompted by the determination that the requirement to accomplish a rated load check (RTC) on certain hoist assemblies may have been inadvertently left out of some aircraft maintenance publications (AMPs). This AD requires performing an RTC on certain part-numbered hoist assemblies with certain part-numbered hoist cables installed and corrective actions if any discrepancies are found as specified in a European Union Aviation Safety Agency (EASA) AD, which is incorporated by reference. The FAA is issuing this AD to address the unsafe condition on these products.

DATES: This AD becomes effective November 17, 2021.

The Director of the Federal Register approved the incorporation by reference of a certain publication listed in this AD as of November 17, 2021.

The FAA must receive comments on this AD by December 17, 2021.

ADDRESSES: You may send comments, using the procedures found in 14 CFR 11.43 and 11.45, by any of the following methods:

- *Federal eRulemaking Portal:* Go to *https://www.regulations.gov*. Follow the instructions for submitting comments.
- *Fax:* (202) 493–2251.
- *Mail:* U.S. Department of Transportation, Docket Operations, M–30, West Building Ground Floor, Room W12–140, 1200 New Jersey Avenue SE, Washington, DC 20590.
- *Hand Delivery:* Deliver to Mail address above between 9 a.m. and 5 p.m., Monday through Friday, except Federal holidays.

For EASA material incorporated by reference (IBR) in this AD, contact the EASA, Konrad-Adenauer-Ufer 3, 50668 Cologne, Germany; telephone +49 221 8999 000; email *ADs@easa.europa.eu;* internet *www.easa.europa.eu*. You may find this IBR material on the EASA website at *https://ad.easa.europa.eu*. For Leonardo S.p.a. service information identified in this AD, contact Leonardo S.p.A. Helicopters, Emanuele Bufano, Head of Airworthiness, Viale G.Agusta 520, 21017 C.Costa di Samarate (Va) Italy; telephone +39–0331–225074; fax +39–0331–229046; or at *https://customerportal.leonardocompany.com/en-US/*. You may view this material at the FAA, Office of the Regional Counsel, Southwest Region, 10101 Hillwood Pkwy., Room 6N–321, Fort Worth, TX 76177. For information on the availability of this material at the FAA, call (817) 222–5110. Service information is also available at *https://www.regulations.gov* by searching for and locating Docket FAA–2021–0885.

Examining the AD Docket

You may examine the AD docket at *https://www.regulations.gov* by searching for and locating Docket No. FAA–2021–0885; or in person at Docket Operations between 9 a.m. and 5 p.m., Monday through Friday, except Federal holidays. The AD docket contains this AD, the EASA AD, any comments received, and other information. The street address for Docket Operations is listed above.

FOR FURTHER INFORMATION CONTACT: Darren Gassetto, Aerospace Engineer, COS Program Management Section, Operational Safety Branch, Compliance & Airworthiness Division, FAA, 1600 Stewart Ave., Suite 410, Westbury, NY 11590; telephone (516) 228–7323; email *Darren.Gassetto@faa.gov*.

SUPPLEMENTARY INFORMATION:

Background

EASA, which is the Technical Agent for the Member States of the European Union, has issued EASA AD 2021–0186R1, dated August 18, 2021 and corrected August 23, 2021 (EASA AD 2021–0186R1), to correct an unsafe condition for Leonardo S.p.A. Helicopters, formerly Finmeccanica S.p.A, AgustaWestland S.p.A., Agusta

S.p.A.; and AgustaWestland Philadelphia Corporation, formerly Agusta Aerospace Corporation, Model AB139 and AW139 helicopters.

EASA advises that a review of an AW139 AMP manual determined that the requirement to accomplish an RTC on a Breeze hoist assembly was not introduced until AMP issue 39, dated June 7, 2021. EASA advises the RTC is intended to verify the integrity of the hoist assembly and the efficiency of the hoist system operation. EASA further advises that the RTC is included in the hoist manufacturer's Flight Line Operation and Maintenance Manual and is required whenever the hoist cable is replaced or a hoist is stored for more than 12 months. EASA further advises since the RTC has been recently published in the AW139 AMP it may not have been accomplished on all affected hoist assemblies. This condition, if not detected and corrected, could lead to failure of the hoist assembly, possibly resulting in loss of external human cargo during hoist operations. Accordingly, EASA AD 2021–0186R1 requires accomplishing an RTC of certain hoist assemblies, and if during the RTC any discrepancy is detected, before next hoist operation, contacting Leonardo S.p.a. Helicopters for approved corrective action. See the EASA AD for additional background information.

FAA's Determination

These products have been approved by the aviation authority of another country, and are approved for operation in the United States. Pursuant to the FAA's bilateral agreement with the State of Design Authority, the FAA has been notified of the unsafe condition described in EASA AD 2021–0186R1 referenced above. The FAA is issuing this AD after evaluating all pertinent information and determining that the unsafe condition exists and is likely to exist or develop on other products of these same type designs.

Related Service Information Under 1 CFR Part 51

EASA AD 2021–0186R1 specifies procedures for accomplishing an RTC of the rescue hoist system in accordance with the instructions in the manufacturer's service information.

This material is reasonably available because the interested parties have access to it through their normal course of business or by the means identified in the **ADDRESSES** section.

AD Requirements

This AD requires accomplishing the actions specified in EASA AD 2021–0186R1, described previously, as incorporated by reference, except for any differences identified as exceptions in the regulatory text of this AD and except as discussed under ''Differences Between this AD and the MCAI.''

Differences Between This AD and EASA AD 2021–0186R1

EASA AD 2021–0186R1 applies to all serial-numbered Model AB139 and AW139 helicopters, whereas this AD only applies to Model AB139 and AW139 helicopters equipped with certain parts that have not completed an RTC in accordance with certain service information following either replacement of certain hoist cables or installation of a hoist assembly that has been in storage for more than 12 consecutive months. Paragraph (2) of EASA AD 2021–0186R1 requires contacting Leonardo S.p.a. Helicopters for approved corrective actions if any discrepancies are found, whereas this AD requires accomplishing the corrective actions using a method approved by the Manager, General Aviation and Rotorcraft Section, International Validation Branch, FAA; or EASA; or Leonardo S.p.a. Helicopters' EASA Design Organization Approval.

Explanation of Applicability Paragraph

This AD applies to certain Leonardo S.p.a. Model AB139 and AW139 helicopters, equipped with certain part-numbered Breeze external hoist assemblies that have not passed an RTC in accordance with certain maintenance manuals, maintenance instructions, or alert service bulletins after certain maintenance actions have been performed. Although EASA specifies that EASA AD 2021–0186R1 is applicable to all Model AB139 and AW139 helicopters, this AD specifies the applicable maintenance manuals, maintenance instructions, and alert service bulletins, along with the maintenance actions, in the Applicability paragraph to ensure all owners and operators comply with passing the RTC prior to the next hoist operation, as required by this AD.

Explanation of Required Compliance Information

In the FAA's ongoing efforts to improve the efficiency of the AD process, the FAA initially worked with Airbus and EASA to develop a process to use certain EASA ADs as the primary source of information for compliance with requirements for corresponding FAA ADs. The FAA has since coordinated with other manufacturers and civil aviation authorities to use this process. As a result, EASA AD 2021–0186R1 is incorporated by reference in this AD. This AD therefore, requires compliance with EASA AD 2021–0186R1 in its entirety, through that incorporation, except for any differences identified as exceptions in the regulatory text of this AD. Using common terms that are the same as the heading of a particular section in the EASA AD does not mean that operators need comply only with that section. For example, where the AD requirement refers to ''all required actions and compliance times,'' compliance with this AD requirement is not limited to the section titled ''Required Action(s) and Compliance Time(s)'' in the EASA AD. Service information specified in EASA AD 2021–0186R1 that is required for compliance with EASA AD 2021–0186R1 is available on the internet at *https://www.regulations.gov* by searching for and locating Docket No. FAA–2021–0885.

Justification for Immediate Adoption and Determination of the Effective Date

Section 553(b)(3)(B) of the Administrative Procedure Act (APA) (5 U.S.C. 551 *et seq.*) authorizes agencies to dispense with notice and comment procedures for rules when the agency, for ''good cause'' finds that those procedures are ''impracticable, unnecessary, or contrary to the public interest.'' Under this section, an agency, upon finding good cause, may issue a final rule without providing notice and seeking comment prior to issuance. Further, section 553(d) of the APA authorizes agencies to make rules effective in less than thirty days, upon a finding of good cause.

An unsafe condition exists that requires the immediate adoption of this AD without providing an opportunity for public comments prior to adoption. The FAA has found that the risk to the flying public justifies foregoing notice and comment prior to adoption of this rule because the requirement to accomplish an RTC on certain hoist assemblies may have been inadvertently left out of some AMPs, and therefore may not have been accomplished on all hoist assemblies, which could lead to failure of the hoist assembly. In addition, the compliance time for the required actions is before the next hoist operation, a shorter time period than the time necessary for the public to comment and for publication of the final rule.

Therefore, notice and opportunity for prior public comment are impracticable and contrary to public interest pursuant to 5 U.S.C. 553(b)(3)(B). In addition, the FAA finds that good cause exists

pursuant to 5 U.S.C. 553(d) for making this amendment effective in less than 30 days, for the same reasons the FAA found good cause to forgo notice and comment.

Comments Invited

The FAA invites you to send any written relevant data, views, or arguments about this AD. Send your comments to an address listed under **ADDRESSES**. Include ''Docket No. FAA–2021–0885.; Project Identifier MCAI–2021–00966–R'' at the beginning of your comments. The most helpful comments reference a specific portion of the AD, explain the reason for any recommended change, and include supporting data. The FAA will consider all comments received by the closing date and may amend this AD because of those comments.

Except for Confidential Business Information (CBI) as described in the following paragraph, and other information as described in 14 CFR 11.35, the FAA will post all comments received, without change, to *https://www.regulations.gov,* including any personal information you provide. The agency will also post a report summarizing each substantive verbal contact received about this AD.

Confidential Business Information

CBI is commercial or financial information that is both customarily and actually treated as private by its owner. Under the Freedom of Information Act (FOIA) (5 U.S.C. 552), CBI is exempt from public disclosure. If your comments responsive to this AD contain commercial or financial information that is customarily treated as private, that you actually treat as private, and that is relevant or responsive to this AD, it is important that you clearly designate the submitted comments as CBI. Please mark each page of your submission containing CBI as ''PROPIN.'' The FAA will treat such marked submissions as confidential under the FOIA, and they will not be placed in the public docket of this AD. Submissions containing CBI should be sent to Darren Gassetto, Aerospace Engineer, COS Program Management Section, Operational Safety Branch, Compliance & Airworthiness Division, FAA, 1600 Stewart Ave., Suite 410, Westbury, NY 11590; telephone (516) 228–7323; email *Darren.Gassetto@faa.gov.* Any commentary that the FAA receives that is not specifically designated as CBI will be placed in the public docket for this rulemaking.

Regulatory Flexibility Act (RFA)

The requirements of the RFA do not apply when an agency finds good cause pursuant to 5 U.S.C. 553 to adopt a rule without prior notice and comment. Because the FAA has determined that it has good cause to adopt this rule without notice and comment, RFA analysis is not required.

Costs of Compliance

The FAA estimates that this AD affects 129 helicopters of U.S. registry. Labor rates are estimated at $85 per work-hour. Based on these numbers, the FAA estimates the following costs to comply with this AD.

Performing an RTC takes about 1 work-hour for an estimated cost of $85 per RTC, and $10,965 for the U.S. fleet.

If required, replacing the hoist assembly takes about 1.5 work-hours and parts cost about $204,364 for an estimated cost of $204,492 per hoist assembly.

If required, replacing a hoist cable takes about 0.75 work-hour and parts cost about $14,141 for an estimated cost of $14,205 per hoist cable.

Authority for This Rulemaking

Title 49 of the United States Code specifies the FAA's authority to issue rules on aviation safety. Subtitle I, section 106, describes the authority of the FAA Administrator. Subtitle VII: Aviation Programs, describes in more detail the scope of the Agency's authority.

The FAA is issuing this rulemaking under the authority described in Subtitle VII, Part A, Subpart III, Section 44701: General requirements. Under that section, Congress charges the FAA with promoting safe flight of civil aircraft in air commerce by prescribing regulations for practices, methods, and procedures the Administrator finds necessary for safety in air commerce. This regulation is within the scope of that authority because it addresses an unsafe condition that is likely to exist or develop on products identified in this rulemaking action.

Regulatory Findings

The FAA determined that this AD will not have federalism implications under Executive Order 13132. This AD will not have a substantial direct effect on the States, on the relationship between the national Government and the States, or on the distribution of power and responsibilities among the various levels of government.

For the reasons discussed above, I certify this regulation:

(1) Is not a ''significant regulatory action'' under Executive Order 12866, and

(2) Will not affect intrastate aviation in Alaska.

List of Subjects in 14 CFR Part 39

Air transportation, Aircraft, Aviation safety, Incorporation by reference, Safety.

The Amendment

Accordingly, under the authority delegated to me by the Administrator, the FAA amends 14 CFR part 39 as follows:

PART 39—AIRWORTHINESS DIRECTIVES

■ 1. The authority citation for part 39 continues to read as follows:

Authority: 49 U.S.C. 106(g), 40113, 44701.

§ 39.13 [Amended]

■ 2. The FAA amends § 39.13 by adding the following new airworthiness directive:

2021–22–13 Leonardo S.p.a.: Amendment 39–21786; Docket No. FAA–2021–0885.; Project Identifier MCAI–2021–00966–R.

(a) Effective Date

This airworthiness directive (AD) becomes effective November 17, 2021.

(b) Affected ADs

None.

(c) Applicability

This AD applies to Leonardo S.p.a. Model AB139 and AW139 helicopters, certificated in any category, equipped with a Breeze external hoist assembly, having part number (P/N) P/N 3G2591V00331 (Breeze P/N BL–20200–421), P/N 3G2591V02931 (Breeze P/N BLH–20200–431–1), P/N 3G2591V02932 (Breeze P/N BLH–20200–431–2), or P/N 3G2591V01431 (Breeze P/N BL–20200–422), that has not passed a rated load check (RTC) in accordance with Breeze Flight Line Operation and Maintenance Manual TD–03–008, TD–08–002 or TD–03–009 as applicable, or the Accomplishment Instructions of Leonardo Emergency Alert Service Bulletin 139–679, dated August 5, 2021 (ASB 139–679), or Annex 1 of Leonardo S.p.A. AW139 Temporary Maintenance Instruction (TMI) 139–546, dated August 2, 2021, after performing the following actions:

(1) Replacement of the hoist cable (Breeze P/N BL–6260 or P/N BL–9149–8, as applicable), or

(2) Installation of a hoist assembly that has been in storage for more than 12 consecutive months.

(d) Subject

Joint Aircraft System Component (JASC) Code: 2550, Cargo Compartments.

(e) Unsafe Condition

This AD was prompted by the determination that the requirement to

accomplish an RTC on certain hoist assemblies may have been inadvertently left out of some aircraft maintenance publications. The FAA is issuing this AD to address failure of the hoist assembly. This condition could result in loss of external human cargo during hoist operations.

(f) Compliance

Comply with this AD within the compliance times specified, unless already done.

(g) Requirements

Except as specified in paragraph (h) of this AD: Comply with all required actions and compliance times specified in, and in accordance with, European Union Aviation Safety Agency (EASA) AD 2021–0186R1, dated August 18, 2021 and corrected August 23, 2021 (EASA AD 2021–0186R1).

(h) Exceptions to EASA AD 2021–0186R1

(1) Where EASA AD 2021–0186R1 refers to August 10, 2021 (the effective date of EASA AD 2021–0186–E at original issue), this AD requires using the effective date of this AD.

(2) This AD does not mandate the ''Remarks'' section of EASA AD 2021–0186R1.

(3) Where paragraph (2) of EASA AD 2021–0186R1 specifies to contact Leonardo S.p.a. for approved corrective action instructions, for this AD, if any discrepancy is detected during the RTC, the corrective actions must be accomplished before next hoist operation using a method to be approved by the Manager, General Aviation and Rotorcraft Section, International Validation Branch, FAA; or EASA; or Leonardo S.p.a. Helicopters' EASA Design Organization Approval (DOA). If approved by the DOA, the approval must include the DOA-authorized signature.

Note 1 to paragraph (h)(3): Discrepancies are noted in steps 2 and 3 of Annex A of ASB 139–679.

(j) No Reporting Requirement

Although the service information referenced in EASA AD 2021–0186R1 specifies to submit certain information to the manufacturer, this AD does not include that requirement.

(k) Special Flight Permit

Special flight permits may be issued in accordance with 14 CFR 21.197 and 21.199 to operate the helicopter to a location where the helicopter can be modified (if the operator elects to do so), provided the external hoist assembly is not used until the RTC and any applicable corrective actions specified in paragraphs (1) through (3) of EASA AD 2021–0186R1 have been accomplished.

(l) Alternative Methods of Compliance (AMOCs)

(1) The Manager, International Validation Branch, FAA, has the authority to approve AMOCs for this AD, if requested using the procedures found in 14 CFR 39.19. In accordance with 14 CFR 39.19, send your request to your principal inspector or local Flight Standards District Office, as appropriate. If sending information directly to the manager of the International Validation Branch, send it to the attention of the person identified in paragraph (m)(1) of this AD. Information may be emailed to: *9-AVS-AIR-730-AMOC@faa.gov.*

(2) Before using any approved AMOC, notify your appropriate principal inspector, or lacking a principal inspector, the manager of the local flight standards district office/certificate holding district office.

(m) Related Information

(1) For more information about this AD, contact Darren Gassetto, Aerospace Engineer, COS Program Management Section, Operational Safety Branch, Compliance & Airworthiness Division, FAA, 1600 Stewart Ave., Suite 410, Westbury, NY 11590; telephone (516) 228–7323; email *Darren.Gassetto@faa.gov.*

(n) Material Incorporated by Reference

(1) The Director of the Federal Register approved the incorporation by reference (IBR) of the service information listed in this paragraph under 5 U.S.C. 552(a) and 1 CFR part 51.

(2) You must use this service information as applicable to do the actions required by this AD, unless this AD specifies otherwise.

(i) European Union Aviation Safety Agency (EASA) AD 2021–0186R1, dated August 18, 2021 and corrected August 23, 2021.

(ii) [Reserved]

(3) For EASA AD 2021–0186R1, contact the EASA, Konrad-Adenauer-Ufer 3, 50668 Cologne, Germany; telephone +49 221 8999 000; email *ADs@easa.europa.eu;* internet *www.easa.europa.eu.* You may find this EASA AD on the EASA website at *https://ad.easa.europa.eu.*

(4) You may view this service information at the FAA, Office of the Regional Counsel, Southwest Region, 10101 Hillwood Pkwy., Room 6N–321, Fort Worth, TX 76177. For information on the availability of this material at the FAA, call 817–222–5110. This material may be found in the AD docket on the internet at *https://www.regulations.gov* by searching for and locating Docket No. FAA–2021–0885.

(5) You may view this material that is incorporated by reference at the National Archives and Records Administration (NARA). For information on the availability of this material at NARA, email *fr.inspection@nara.gov,* or go to *https://www.archives.gov/federal-register/cfr/ibr-locations.html.*

Issued on October 15, 2021.

Lance T. Gant,

Director, Compliance & Airworthiness Division, Aircraft Certification Service.

[FR Doc. 2021–23896 Filed 10–28–21; 4:15 pm]

BILLING CODE 4910–13–P

DEPARTMENT OF TRANSPORTATION

Federal Aviation Administration

14 CFR Part 71

[Docket No. FAA–2021–0169; Airspace Docket No. 21–ASO–3]

RIN 2120–AA66

Amendment Class D and Class E Airspace; South Florida

AGENCY: Federal Aviation Administration (FAA), DOT.

ACTION: Final rule, delay of effective date.

SUMMARY: This action changes the effective date of a final rule published in the **Federal Register** on September 8, 2021, amending airspace for several airports in the south Florida area. The FAA is delaying the effective date to coincide with the completion of ongoing airspace projects in the area.

DATES: The effective date of the final rule published on September 8, 2021 (86 FR 50245) is delayed until March 24, 2022. The Director of the Federal Register approved this incorporation by reference action under Title 1 Code of Federal Regulations part 51, subject to the annual revision of FAA Order JO 7400.11 and publication of conforming amendments.

FOR FURTHER INFORMATION CONTACT: John Fornito, Operations Support Group, Eastern Service Center, Federal Aviation Administration, 1701 Columbia Ave., College Park, GA 30337; Telephone (404) 305–6364.

SUPPLEMENTARY INFORMATION:

Background

The FAA published a final rule in the **Federal Register** for Docket No. FAA 2021–0169 (86 FR 50245, September 8, 2021), amending Class D and Class E airspace for eight airports in the south Florida area. The effective date for that final rule is January 27, 2022. Due to delays in other rule making projects in the area, the FAA is delaying the effective date to March 24, 2022. This rulemaking is promulgated under the authority described in Subtitle VII, Part A, Subpart I, Section 40103. Under that section, the FAA is charged with prescribing regulations to assign the use of airspace necessary to ensure the safety of aircraft and the efficient use of airspace. FAA Order JO 7400.11, Airspace Designations and Reporting Points, is published yearly and effective on September 15.

Good Cause for No Notice and Comment

Section 553(b) (3) (B) of Title 5, United States Code, (the Administrative Procedure Act) authorizes agencies to dispense with notice and comment procedures for rules when the agency for ''good cause'' finds that those procedures are ''impracticable, unnecessary, or contrary to the public interest.'' Under this section, an agency, upon finding good cause, may issue a final rule without seeking comment prior to the rulemaking. The FAA finds that prior notice and public comment to this final rule is unnecessary due to the brief length of the extension of the effective date and the fact that there is no substantive change to the rule.

Delay of Effective Date

Accordingly, pursuant to the authority delegated to me, the effective date of the final rule, Airspace Docket 21–ASO–3, as published in the **Federal Register** on September 8, 2021 (86 FR 50245), FR Doc. 2021–19268, is hereby delayed until March 24, 2022.

Authority: 49 U.S.C. 106(f), 106(g); 40103, 40113, 40120; E.O. 10854, 24 FR 9565, 3 CFR, 1959–1963 Comp., p. 389.

Issued in College Park, Georgia, on October 26, 2021.

Andreese C. Davis,

Manager, Airspace & Procedures Team South, Eastern Service Center, Air Traffic Organization.

[FR Doc. 2021–23789 Filed 11–1–21; 8:45 am]

BILLING CODE 4910–13–P

ENVIRONMENTAL PROTECTION AGENCY

40 CFR Part 180

[EPA–HQ–OPP–2020–0391; FRL–8991–01–OCSPP]

Benzobicyclon; Pesticide Tolerances

AGENCY: Environmental Protection Agency (EPA).

ACTION: Final rule.

SUMMARY: This regulation increases a tolerance for residues of benzobicyclon in or on rice grain and removes any restriction on regional use. Gowan Company requested this tolerance increase under the Federal Food, Drug, and Cosmetic Act (FFDCA).

DATES: This regulation is effective November 2, 2021. Objections and requests for hearings must be received on or before January 3, 2022, and must be filed in accordance with the instructions provided in 40 CFR part 178 (see also Unit I.C. of the **SUPPLEMENTARY INFORMATION**).

ADDRESSES: The docket for this action, identified by docket identification (ID) number EPA–HQ–OPP–2020–0391, is available at *http://www.regulations.gov* or at the Office of Pesticide Programs Regulatory Public Docket (OPP Docket) in the Environmental Protection Agency Docket Center (EPA/DC), West William Jefferson Clinton Bldg., Rm. 3334, 1301 Constitution Ave. NW, Washington, DC 20460–0001. The Public Reading Room is open from 8:30 a.m. to 4:30 p.m., Monday through Friday, excluding legal holidays. The telephone number for the Public Reading Room is (202) 566–1744, and the telephone number for the OPP Docket is (703) 305–5805.

Due to the public health emergency, the EPA Docket Center (EPA/DC) and Reading Room is closed to visitors with limited exceptions. The staff continues to provide customer service via email, phone, and webform. For the latest status information on EPA/DC services, docket access, visit *http://www.epa.gov/dockets.*

FOR FURTHER INFORMATION CONTACT: Marietta Echeverria, Acting Director, Registration Division (7505P), Office of Pesticide Programs, Environmental Protection Agency, 1200 Pennsylvania Ave. NW, Washington, DC 20460–0001; main telephone number: (703) 305–7090; email address: *RDFRNotices@epa.gov.*

SUPPLEMENTARY INFORMATION:

I. General Information

A. Does this action apply to me?

You may be potentially affected by this action if you are an agricultural producer, food manufacturer, or pesticide manufacturer. The following list of North American Industrial Classification System (NAICS) codes is not intended to be exhaustive, but rather provides a guide to help readers determine whether this document applies to them. Potentially affected entities may include:

- Crop production (NAICS code 111).
- Animal production (NAICS code 112).
- Food manufacturing (NAICS code 311).
- Pesticide manufacturing (NAICS code 32532).

B. How can I get electronic access to other related information?

You may access a frequently updated electronic version of EPA's tolerance regulations at 40 CFR part 180 through the Government Publishing Office's e-CFR site at *http://www.ecfr.gov/cgi-bin/text-idx?&c=ecfr&tpl=/ecfrbrowse/Title40/40tab_02.tpl.*

C. How can I file an objection or hearing request?

Under FFDCA section 408(g), 21 U.S.C. 346a(g), any person may file an objection to any aspect of this regulation and may also request a hearing on those objections. You must file your objection or request a hearing on this regulation in accordance with the instructions provided in 40 CFR part 178. To ensure proper receipt by EPA, you must identify docket ID number EPA–HQ–OPP–2020–0391 in the subject line on the first page of your submission. All objections and requests for a hearing must be in writing and must be received by the Hearing Clerk on or before January 3, 2022. Addresses for mail and hand delivery of objections and hearing requests are provided in 40 CFR 178.25(b).

In addition to filing an objection or hearing request with the Hearing Clerk as described in 40 CFR part 178, please submit a copy of the filing (excluding any Confidential Business Information (CBI)) for inclusion in the public docket. Information not marked confidential pursuant to 40 CFR part 2 may be disclosed publicly by EPA without prior notice. Submit the non-CBI copy of your objection or hearing request, identified by docket ID number EPA–HQ–OPP–2020–0391, by one of the following methods:

- *Federal eRulemaking Portal: http://www.regulations.gov.* Follow the online instructions for submitting comments. Do not submit electronically any information you consider to be CBI or other information whose disclosure is restricted by statute.
- *Mail:* OPP Docket, Environmental Protection Agency Docket Center (EPA/DC), (28221T), 1200 Pennsylvania Ave. NW, Washington, DC 20460–0001.
- *Hand Delivery:* To make special arrangements for hand delivery or delivery of boxed information, please follow the instructions at *http://www.epa.gov/dockets/where-send-comments-epa-dockets.*

Additional instructions on commenting or visiting the docket, along with more information about dockets generally, is available at *http://www.epa.gov/dockets.*

II. Summary of Petitioned-For Tolerance

In the **Federal Register** of April 22, 2021 (86 FR 21317) (FRL–10022–59) EPA issued a document pursuant to FFDCA section 408(d)(3), 21 U.S.C. 346a(d)(3), announcing the filing of a pesticide petition (PP 0F8831) by

Gowan Company, P.O. Box 5569, Yuma, AZ 85364. The petition requested to amend the tolerance in 40 CFR 180.693 for residues of the herbicide benzobicyclon in or on rice to 0.15 parts per million (ppm). That document referenced a summary of the petition prepared by Gowan, the petitioner, which is available in the docket, *http://www.regulations.gov.* There were no comments received in response to the notice of filing.

III. Aggregate Risk Assessment and Determination of Safety

Section 408(b)(2)(A)(i) of FFDCA allows EPA to establish a tolerance (the legal limit for a pesticide chemical residue in or on a food) only if EPA determines that the tolerance is ''safe.'' Section 408(b)(2)(A)(ii) of FFDCA defines ''safe'' to mean that ''there is a reasonable certainty that no harm will result from aggregate exposure to the pesticide chemical residue, including all anticipated dietary exposures and all other exposures for which there is reliable information.'' This includes exposure through drinking water and in residential settings but does not include occupational exposure. Section 408(b)(2)(C) of FFDCA requires EPA to give special consideration to exposure of infants and children to the pesticide chemical residue in establishing a tolerance and to ''ensure that there is a reasonable certainty that no harm will result to infants and children from aggregate exposure to the pesticide chemical residue . . .''

Consistent with FFDCA section 408(b)(2)(D), and the factors specified therein, EPA has reviewed the available scientific data and other relevant information in support of this action. EPA has sufficient data to assess the hazards of and to make a determination on aggregate exposure for benzobicyclon, including exposure resulting from the tolerance established by this action. EPA's assessment of exposures and risks associated with benzobicyclon follows.

In an effort to streamline its publications in the **Federal Register**, EPA is not reprinting sections that repeat what has been previously published for tolerance rulemaking of the same pesticide chemical. Where scientific information concerning a particular chemical remains unchanged, the content of those sections would not vary between tolerance rulemaking, and EPA considers referral back to those sections as sufficient to provide an explanation of the information EPA considered in making its safety determination for the new rulemaking.

EPA has previously published a tolerance rulemaking for benzobicyclon, in which EPA concluded, based on the available information, that there is a reasonable certainty that no harm would result from aggregate exposure to benzobicyclon and established a tolerance for residues of that chemical. See the benzobicyclon tolerance rulemaking published in the **Federal Register** of April 25, 2017 (82 FR 18995) (FRL–9961–02). EPA is incorporating previously published sections from that rulemaking that remain unchanged, as described further in this rulemaking.

Toxicological profile. There have been updates to the toxicological profile from the previous assessment. The parent compound, benzobicyclon, is a pro-pesticide, which means it requires hydrolysis of the thiophenyl group to generate the anticipated pesticidal active moiety, metabolite B (also referred to as 1315P–070). The toxicological database is considered complete for risk assessment purposes for both the parent, benzobicyclon, and metabolite B. The enzyme 4-hydroxyphenylpyruvate dioxygenase (HPPD) is involved in the catabolism of tyrosine, an essential amino acid for mammals. While benzobicyclon may be referred to as an HPPD inhibitor, typical HPPD-inhibiting effects are not observed in its toxicological database. However, metabolite B does exhibit HPPD-inhibiting effects and is therefore considered an HPPD-inhibiting chemical. The initiating event in the mode-of-action (MOA)/adverse-outcome pathway (AOP) for HPPD-inhibiting chemicals, including metabolite B, involves binding of the chemical to the HPPD enzyme causing complete or virtually complete enzyme inhibition, which leads to a build-up of systemic tyrosine levels (tyrosinemia) and a spectrum of tyrosine-mediated effects. In laboratory animals, these have been identified as ocular and skeletal developmental effects. Species differences exist in laboratory animals related to the ability of a species to clear excess tyrosine from its system, which can impact its sensitivity to HPPD-inhibiting chemicals and its relevance for human health risk assessment. In this risk assessment, endpoints were selected for both benzobicyclon and metabolite B. Taking into account species differences, endpoints for human health risk assessment of HPPD inhibitors, including metabolite B, were selected from studies available in mice and dogs. Studies from other HPPD inhibitors were used for bridging to metabolite B as needed. Since benzobicyclon does not exhibit HPPD-inhibiting properties, endpoints were selected from the most sensitive species and effects in its database (not restricted to mice and dogs).

Benzobicyclon: An acute dietary endpoint was not selected for benzobicyclon, as there were no effects attributable to a single dose identified in the database. The chronic dietary, incidental oral, and inhalation endpoints were based on increased incidence of hydropic degeneration (basophilic cells) in the pituitary observed in the two-generation reproduction toxicity study in rats. A dermal endpoint was not selected since no hazard was identified in the dermal toxicity study and there was no evidence of increased quantitative susceptibility in the database. Benzobicyclon is classified as ''Not Likely to be Carcinogenic to Humans'' based on the absence of treatment-related tumors in two adequate rodent carcinogenicity studies.

Metabolite B: There were no effects attributable to a single dose available in the metabolite B database or in studies from other HPPD inhibitors; therefore, an acute dietary endpoint was not selected for metabolite B. The chronic dietary endpoint is based on gallstones, eosinophilic cytoplasmic alteration, subepithelial mixed cell infiltrate, and dilatation in/of the gallbladder; hepatocellular vacuolation, hepatocellular hypertrophy, and increased liver weight in males and females; and papillary mineralization of the kidney and changes in hematological parameters indicative of anemia in females observed in the chronic/carcinogenicity study in mice from another HPPD chemical available for bridging (tembotrione). Since the only anticipated exposure is through drinking water, no additional points of departure (PODs) were selected for metabolite B. There are no carcinogenicity studies available for metabolite B; however, carcinogenicity studies are available for bridging for all of the other currently registered HPPD inhibitors. Overall, potential carcinogenicity is not a concern for the HPPD inhibitors, and the chronic dietary endpoint and POD for metabolite B is considered protective of any potential carcinogenicity.

Additional information is available in the docket for this action in the document titled ''Benzobicyclon: Section 3 Risk Assessment for Proposed New Formulation, Increase to the Established Tolerance, and National Use Expansion on Rice'' (hereafter, the ''Benzobicyclon Human Health Risk Assessment'').

Toxicological points of departure/ Levels of concern. For a summary of the Toxicological Points of Departure/ Levels of Concern for benzobicyclon and metabolite B used for human health risk assessment, please reference section 4.6.3 on pages 25–27 of the ''Benzobicyclon Human Health Risk Assessment''.

Exposure assessment. EPA's dietary exposure assessments have been updated to include the additional exposure from the tolerance increase on rice grain and national use expansion.

No effects attributable to a single dose were observed for benzobicyclon or metabolite B; therefore, acute dietary exposure assessments were not conducted.

Based on the toxicological effects of benzobicyclon and metabolite B, separate chronic dietary exposure and risk assessments were conducted. The assessments were conducted using Dietary Exposure Evaluation Model software with the Food Commodity Intake Database (DEEM–FCID) Version 3.16, which uses food consumption data from the U.S. Department of Agriculture's (USDA's) National Health and Nutrition Examination Survey, What We Eat in America, (NHANES/ WWEIA). This dietary survey was conducted from 2003 to 2008.

The benzobicyclon chronic dietary exposure assessment assumed tolerance-level residues for rice, 100 percent crop treated (PCT), and a modeled estimated drinking water concentration (EDWC) of 0.199 parts per billion (ppb). The DEEM default processing factor of 1.25 was used for both rice flour and rice bran.

There is no anticipated exposure in food to metabolite B. As metabolite B is only a residue of concern in drinking water, the chronic dietary exposure assessment was conducted for drinking water only. The chronic analysis used a modeled EDWC of 4.27 ppb and assumed 100 PCT.

There are no residential (non-occupational) exposures associated with benzobicyclon or metabolite B.

Cumulative exposure. The Agency is required to consider the cumulative risks of chemicals sharing a common mechanism of toxicity. The Agency has determined that the (p-hydroxyphenyl-pyruvate dioxygenase) HPPD inhibitors share a common mechanism of toxicity as discussed in the document titled ''HPPD Inhibiting Herbicides: State of the Science,'' which is available in the docket for this action. As explained in that document, the members of this group of chemicals share the ability to bind to and inhibit the HPPD enzyme resulting in elevated systemic tyrosine levels and common apical outcomes that are mediated by tyrosine, including ocular and developmental effects. In 2021, after establishing a common mechanism grouping for the HPPD inhibitors, the Agency conducted the ''P-Hydroxyphenyl-Pyruvate Dioxygenase (HPPD) Inhibitors Cumulative Risk Assessment: Benzobicyclon, Bicyclopyrone, Isoxaflutole, Mesotrione, Pyrasulfotole, Tembotrione, Tolpyralate, and Topramezone,'' which is available in the docket for the action, and concluded that cumulative exposures to HPPD inhibitors (based on proposed and registered pesticidal uses at the time the assessment was conducted) did not present risks of concern.

Safety Factor (SF) for Infants and Children. The Food Quality Protection Act (FQPA) section has been updated since the last assessment. EPA has determined that the required FQPA SF of 10X for the protection of infants and children be reduced to 1X for all exposure scenarios for benzobicyclon (parent). For metabolite B, since the chronic dietary endpoint is based on a study with no No-Observed-Adverse-Effect Level (NOAEL), a 10X FQPA SF/ Uncertainty Factor (UF_L) has been retained for extrapolation from a Lowest-Observed-Adverse-Effect Level (LOAEL) to a NOAEL.

Completeness of the Toxicology Database: The existing toxicological database for benzobicyclon is adequate for FQPA evaluation. Developmental and two-generation reproduction studies in rats are available for benzobicyclon. However, the active moiety of benzobicyclon, metabolite B, has been shown to be more toxic than the parent compound. Therefore, studies were conducted with metabolite B, including a developmental toxicity study in mice. Additionally, 2-generation reproduction toxicity studies are available from other HPPD inhibitors for bridging.

Evidence of Neurotoxicity: There was no neurotoxicity observed throughout the database for benzobicyclon or metabolite B. The subchronic neurotoxicity study with benzobicyclon tested up to 1,290 mg/kg with no adverse effects observed, nor was there evidence of neurotoxicity in any of the guideline studies in the databases for either chemical.

Evidence of Sensitivity/Susceptibility in the Developing or Young Animal: For benzobicyclon, there was no increased qualitative or quantitative susceptibility observed in the two-generation reproduction or developmental toxicity studies in rats. A developmental study in rabbits was submitted but was considered unacceptable and subsequently waived by EPA.

For metabolite B, a developmental toxicity study in mice did not show any increased qualitative or quantitative susceptibility. A 2-generation reproduction study is not available for metabolite B; however, there are 2-generation reproduction studies from other HPPDs inhibitors that can be used for bridging. In one of the 2-generation studies in mice for another HPPD inhibitor (mesotrione), quantitative susceptibility was observed in offspring. However, concern is low because there are clear NOAEL/LOAEL values for the observed effects, the offspring LOAEL of 300 mg/kg/day from the mesotrione 2-generation reproduction toxicity study was set conservatively based on a low incidence of opaque/cloudy eyes, and the selected endpoints used in this risk assessment are protective of any potential sensitivity observed in mice.

Residual Uncertainty in the Exposure Database: The exposure databases are complete or are estimated based on data that reasonably account for potential exposures. There are no registered or proposed residential uses and/or commercial uses at residential sites for benzobicyclon at this time. Therefore, a residential exposure assessment is not required. The dietary exposure assessments (food and drinking water) are considered to be conservative estimates of exposure. Tolerance-level residues for rice and 100 PCT were assumed for the food exposure assessment. Drinking water exposure estimates (for both benzobicyclon and metabolite B) are based on conservative models assuming maximum use rates and are not expected to underestimate the exposure. The Agency is confident that the assessments do not underestimate risk from dietary exposure to benzobicyclon or metabolite B.

Aggregate risks and Determination of safety. EPA determines whether acute and chronic dietary pesticide exposures are safe by comparing aggregate exposure estimates to the acute population-adjusted dose (aPAD) and the chronic population-adjusted dose (cPAD). Short-, intermediate-, and chronic term risks are evaluated by comparing the estimated aggregate food, water, and residential exposure to the appropriate points of departure to ensure that an adequate margin of exposure (MOE) exists. For linear cancer risks, EPA calculates the lifetime probability of acquiring cancer given the estimated aggregate exposure.

There are no acute dietary endpoints for benzobicyclon or metabolite B; therefore, an acute risk assessment is

unnecessary. Chronic dietary risks are below the Agency's level of concern of 100% of the cPAD for both benzobicyclon and metabolite B. It is less than 1% of the cPAD for benzobicyclon for all population subgroups and 5.8% of the cPAD for metabolite B for all infants less than 1-year old, the population subgroup with the highest exposure estimate for both benzobicyclon and metabolite B.

As noted earlier, there are no residential uses associated with benzobicyclon. Because there is no short- or intermediate-term residential exposure and chronic dietary exposure has been assessed under the appropriately protective cPAD, EPA relies on the chronic dietary risk assessment for evaluating short- and intermediate-term risk for benzobicyclon and metabolite B.

Based on the lack of evidence of carcinogenicity in two adequate rodent carcinogenicity studies, benzobicyclon is not expected to pose a cancer risk to humans. For metabolite B, potential carcinogenicity is not a concern for the HPPD inhibitors and the chronic dietary endpoint and POD for metabolite B is considered protective of any potential carcinogenicity.

Therefore, based on the risk assessments and information described above, EPA concludes there is reasonable certainty that no harm will result to the general population, or to infants and children, from aggregate exposure to benzobicyclon or metabolite B residues. More detailed information can be found at *http://www.regulations.gov* in the Benzobicyclon Human Health Risk Assessment in docket ID number EPA–HQ–OPP–2020–0391.

IV. Other Considerations

A. Analytical Enforcement Methodology

For a discussion of the available analytical enforcement method, see Unit IV.A. of the April 25, 2017 rulemaking (82 FR 18995) (FRL–9961–02).

B. International Residue Limits

In making its tolerance decisions, EPA seeks to harmonize U.S. tolerances with international standards whenever possible, consistent with U.S. food safety standards and agricultural practices. EPA considers the international maximum residue limits (MRLs) established by the Codex Alimentarius Commission (Codex), as required by FFDCA section 408(b)(4).

The Codex has not established an MRL for residues of benzobicyclon in or on rice grain.

V. Conclusion

Therefore, the tolerance for residues of benzobicyclon on rice, grain is increased from 0.01 ppm to 0.15 ppm and is no longer a tolerance with regional restrictions.

VI. Statutory and Executive Order Reviews

This action increases a tolerance under FFDCA section 408(d) in response to a petition submitted to the Agency. The Office of Management and Budget (OMB) has exempted these types of actions from review under Executive Order 12866, entitled ''Regulatory Planning and Review'' (58 FR 51735, October 4, 1993). Because this action has been exempted from review under Executive Order 12866, this action is not subject to Executive Order 13211, entitled ''Actions Concerning Regulations That Significantly Affect Energy Supply, Distribution, or Use'' (66 FR 28355, May 22, 2001), or to Executive Order 13045, entitled ''Protection of Children from Environmental Health Risks and Safety Risks'' (62 FR 19885, April 23, 1997). This action does not contain any information collections subject to OMB approval under the Paperwork Reduction Act (PRA) (44 U.S.C. 3501 *et seq.*), nor does it require any special considerations under Executive Order 12898, entitled ''Federal Actions to Address Environmental Justice in Minority Populations and Low-Income Populations'' (59 FR 7629, February 16, 1994).

Since tolerances and exemptions that are established on the basis of a petition under FFDCA section 408(d), such as the tolerance in this final rule, do not require the issuance of a proposed rule, the requirements of the Regulatory Flexibility Act (RFA) (5 U.S.C. 601 *et seq.*), do not apply.

This action directly regulates growers, food processors, food handlers, and food retailers, not States or Tribes, nor does this action alter the relationships or distribution of power and responsibilities established by Congress in the preemption provisions of FFDCA section 408(n)(4). As such, the Agency has determined that this action will not have a substantial direct effect on States or Tribal Governments, on the relationship between the National Government and the States or Tribal Governments, or on the distribution of power and responsibilities among the various levels of government or between the Federal Government and Indian Tribes. Thus, the Agency has determined that Executive Order 13132, entitled ''Federalism'' (64 FR 43255, August 10, 1999) and Executive Order 13175, entitled ''Consultation and Coordination with Indian Tribal Governments'' (65 FR 67249, November 9, 2000) do not apply to this action. In addition, this action does not impose any enforceable duty or contain any unfunded mandate as described under Title II of the Unfunded Mandates Reform Act (UMRA) (2 U.S.C. 1501 *et seq.*).

This action does not involve any technical standards that would require Agency consideration of voluntary consensus standards pursuant to section 12(d) of the National Technology Transfer and Advancement Act (NTTAA) (15 U.S.C. 272 note).

VII. Congressional Review Act

Pursuant to the Congressional Review Act (5 U.S.C. 801 *et seq.*), EPA will submit a report containing this rule and other required information to the U.S. Senate, the U.S. House of Representatives, and the Comptroller General of the United States prior to publication of the rule in the **Federal Register**. This action is not a ''major rule'' as defined by 5 U.S.C. 804(2).

List of Subjects in 40 CFR Part 180

Environmental protection, Administrative practice and procedure, Agricultural commodities, Pesticides, and pests, Reporting and recordkeeping requirements.

Dated: October 27, 2021.

Marietta Echeverria,

Acting Director, Registration Division, Office of Pesticide Programs.

Therefore, for the reasons stated in the preamble, EPA is amending 40 CFR chapter 1 as follows:

PART 180—TOLERANCES AND EXEMPTIONS FOR PESTICIDE CHEMICAL RESIDUES IN FOOD

■ 1. The authority citation for part 180 continues to read as follows:

Authority: 21 U.S.C. 321(q), 346a and 371.

■ 2. Revise § 180.693 to read as follows:

§ 180.693 Benzobicyclon; tolerances for residues.

(a) *General.* Tolerances are established for residues of the herbicide benzobicyclon, including its metabolites and degradates, in or on the commodity in the table below. Compliance with the tolerance level specified below is to be determined by measuring only benzobicyclon, 3-[2-chloro-4-(methylsulfonyl)benzoyl]-4-(phenylthio)bicyclo-[3.2.1]oct-3-en-2-one), in or on the following raw agricultural commodity:

TABLE 1 TO § 180.693(a)

Commodity	Parts per million
Rice, grain	0.15

(b)–(d) [Reserved]

[FR Doc. 2021–23836 Filed 11–1–21; 8:45 am]

BILLING CODE 6560–50–P

GENERAL SERVICES ADMINISTRATION

48 CFR Part 532

[GSAR Case 2020–G521; Docket No. GSA–GSAR–2021–0023; Sequence No. 1]

RIN 3090–AK35

General Services Administration Acquisition Regulation; Remove OGC Review for Final Payments

AGENCY: Office of Acquisition Policy, General Services Administration (GSA).

ACTION: Final rule.

SUMMARY: The General Services Administration (GSA) is issuing a final rule amending the General Services Administration Acquisition Regulation (GSAR) to revise internal agency approval procedures for processing a final payment for construction and building service contracts where, after 60 days, a contracting officer is unable to obtain a release of claims from a contractor.

DATES: Effective: December 2, 2021.

FOR FURTHER INFORMATION CONTACT: Mr. Tyler Piper or Mr. Stephen Carroll, GSA Acquisition Policy Division, at *GSARPolicy@gsa.gov* or 817–253–7858, for clarification of content. For information pertaining to status or publication schedules, contact the Regulatory Secretariat at 202–501–4755. Please cite GSAR Case 2020–G521.

SUPPLEMENTARY INFORMATION:

I. Background

GSA published a proposed rule in the **Federal Register** at 86 FR 20359 on April 19th, 2021, to amend the General Services Administration Regulations (GSAR) to modify GSAR 532.905–70 so it no longer requires contracting officers to obtain approval of legal counsel before processing final payments for construction and building service contracts where, after 60 days, the contracting officer is unable to obtain a release of claims from the contractors. Legal review is not a statutory requirement, and the decision to process final payments in such cases is a business decision, rather than a legal one.

II. Authority for This Rulemaking

Title 40 of the United States Code (U.S.C.) Section 121 authorizes GSA to issue regulations, including the GSAR, to control the relationship between GSA and contractors.

III. Discussion and Analysis

The proposed rule received one comment. The General Services Administration has reviewed the comment in the development of the final rule. A discussion of the comment and the changes made to the rule as a result of the comment is provided as follows:

A. Summary of Significant Changes

No changes were made between the proposed rule and this final rule.

B. Comments

1. Changes to Oversight

Comment: The respondent expressed concern that removing the Office of General Council (OGC's) oversight over contract closing could potentially invite fraud.

Response: The purpose of OGC review is to provide legal advice and guidance to agency personnel, based on applicable laws, regulations, and policies, consistent with the best interests of the United States. It is not designed as a specific safeguard from fraud. GSA has determined that removal of this particular OGC review will streamline operations without opening a new area of risk of non-compliance with laws, regulations, or policies.

From a fraud mitigation standpoint, the need for separate approval still exists, but it is more appropriately nested within the business operations, not legal counsel.

IV. Executive Orders 12866 and 13563

Executive Orders (E.O.s) 12866 and 13563 direct agencies to assess all costs and benefits of available regulatory alternatives and, if regulation is necessary, to select regulatory approaches that maximize net benefits (including potential economic, environmental, public health and safety effects, distributive impacts, and equity). E.O. 13563 emphasizes the importance of quantifying both costs and benefits, of reducing costs, of harmonizing rules, and of promoting flexibility. This rule has been reviewed and determined by Office of Management and Budget (OMB) not to be a significant regulatory action and, therefore, was not subject to review under section 6(b) of E.O. 12866, Regulatory Planning and Review, dated September 30, 1993.

V. Congressional Review Act

The Congressional Review Act, 5 U.S.C. 801 *et seq.,* as amended by the Small Business Regulatory Enforcement Fairness Act of 1996, generally provides that before a ''major rule'' may take effect, the agency promulgating the rule must submit a rule report, which includes a copy of the rule, to each House of the Congress and to the Comptroller General of the United States. A major rule cannot take effect until 60 days after it is published in the **Federal Register**. This rule has been reviewed and determined by OMB not to be a ''major rule'' under 5 U.S.C. 804(2).

VI. Regulatory Flexibility Act

The General Services Administration certifies that this final rule will not have a significant economic impact on a substantial number of small entities within the meaning of the Regulatory Flexibility Act, 5 U.S.C. 601, *et seq.*

VIII. Paperwork Reduction Act

The final rule does not contain any information collection requirements that require the approval of the Office of Management and Budget under the Paperwork Reduction Act (44 U.S.C. chapter 35).

List of Subjects in 48 CFR Part(s) 532

Government procurement.

Jeffrey A. Koses,

Senior Procurement Executive, Office of Acquisition Policy, Office of Governmentwide Policy, General Services Administration.

Therefore, GSA amends 48 CFR part 532 as set forth below:

PART 532—CONTRACT FINANCING

■ 1. The authority citation for 48 CFR part 532 continues to read as follows:

Authority: 40 U.S.C. 121(c).

■ 2. Amend section 532.905–70 by—

■ a. Removing from paragraph (a) the phrase ''amount due the Contractor'' and adding the phrase ''amount due to the contractor'' in its place;

■ b. Revising paragraph (b); and

■ c. Removing paragraphs (c) and (d).

The revision reads as follows:

532.905–70 Final payment—construction and building service contracts.

* * * * *

(b) A contracting officer may only process the final payment for a construction or building service contract once:

(1) The contractor submits a properly executed GSA Form 1142, Release of Claims; or

(2) The contracting officer documents in the contract file:

(i) That the contracting officer requested a release of claims from the contractor and did not receive a response within 60 calendar days; and

(ii) Approval to process the final payment from one level above the contracting officer.

[FR Doc. 2021–23669 Filed 11–1–21; 8:45 am]

BILLING CODE 6820–61–P

DEPARTMENT OF COMMERCE

National Oceanic and Atmospheric Administration

50 CFR Part 622

[Docket No. 121004515–3608–02]

RIN 0648–XB540

Fisheries of the Caribbean, Gulf of Mexico, and South Atlantic; 2021 Re-Opening of Commercial Harvest for South Atlantic Red Snapper

AGENCY: National Marine Fisheries Service (NMFS), National Oceanic and Atmospheric Administration (NOAA), Commerce.

ACTION: Temporary rule; reopening.

SUMMARY: NMFS announces the reopening of the commercial sector for red snapper in the exclusive economic zone (EEZ) of the South Atlantic through this temporary rule. The most recent commercial landings of red snapper indicate that the commercial annual catch limit (ACL) for the 2021 fishing year has not yet been reached. Therefore, NMFS reopens the commercial sector for red snapper in the South Atlantic EEZ for 4 calendar days to allow the commercial ACL to be reached, while minimizing the risk of the commercial ACL being exceeded.

DATES: This rule is effective 12:01 a.m., local time, November 2, 2021, until 12:01 a.m., local time, November 6, 2021.

FOR FURTHER INFORMATION CONTACT: Mary Vara, NMFS Southeast Regional Office, telephone: 727–824–5305, email: *mary.vara@noaa.gov.*

SUPPLEMENTARY INFORMATION: The snapper-grouper fishery of the South Atlantic includes red snapper and is managed under the Fishery Management Plan for the Snapper-Grouper Fishery of the South Atlantic Region (FMP). The FMP was prepared by the South Atlantic Fishery Management Council and is implemented by NMFS under the authority of the Magnuson-Stevens Fishery Conservation and Management Act (Magnuson-Stevens Act) by regulations at 50 CFR part 622.

The commercial ACL for red snapper in the South Atlantic is 124,815 lb (56,615 kg), round weight, as specified in 50 CFR 622.193(y)(1).

Under 50 CFR 622.193(y)(1), NMFS is required to close the commercial sector for red snapper when landings reach, or are projected to reach, the commercial ACL by filing a notification to that effect with the Office of the Federal Register.

NMFS previously projected that the commercial ACL for South Atlantic red snapper for the 2021 fishing year would be reached by September 14, 2021. Accordingly, NMFS published a temporary rule in the **Federal Register** to implement accountability measures to close the commercial sector for red snapper in the South Atlantic EEZ effective from September 14, 2021, through December 31, 2021 (86 FR 50861; September 13, 2021).

However, recent landings data for red snapper indicate that the commercial ACL has not been yet been reached. Consequently, and in accordance with 50 CFR 622.8(c), NMFS temporarily reopens the commercial sector for red snapper effective at 12:01 a.m. on November 2, 2021. The commercial sector will remain open for 4 calendar days, and the commercial trip limit remains at 75 lb (34 kg), gutted weight (50 CFR 622.191(a)(9)). Reopening the commercial sector for this limited time allows an additional opportunity for the commercial sector to harvest the commercial ACL for red snapper, while minimizing the risk of the commercial ACL being exceeded. For the 2022 fishing year, unless otherwise specified, the commercial season will begin on the second Monday in July (50 CFR 622.183(b)(5)(i)).

The operator of a vessel with a valid commercial vessel permit for South Atlantic snapper-grouper having red snapper on board must have landed and bartered, traded, or sold such red snapper prior to 12:01 a.m., eastern time, on November 6, 2021. Because the recreational sector closed on July 12, 2021 (86 FR 30393; June 8, 2021), the recreational bag and possession limit for red snapper in or from South Atlantic federal waters is zero. After the commercial sector reopening and subsequent closure that is effective on November 6, 2021, all harvest and possession of red snapper in or from the South Atlantic EEZ is prohibited for the remainder of the 2021 fishing year and until the fishery opens for the 2022 fishing year.

On and after November 6, 2021, all sale or purchase of red snapper is prohibited. This prohibition on the harvest, possession, sale or purchase applies in the South Atlantic on a vessel for which a valid Federal commercial or charter vessel/headboat permit for South Atlantic snapper-grouper has been issued, regardless if such species were harvested or possessed in state or Federal waters (50 CFR 622.193(y)(1) and 622.181(c)(2)).

Classification

NMFS issues this action pursuant to section 305(d) of the Magnuson-Stevens Act. This action is required by 50 CFR 622.193(y)(1), which was issued pursuant to section 304(b) of the Magnuson-Stevens Act, and is exempt from review under Executive Order 12866.

Pursuant to 5 U.S.C. 553(b)(B), the NMFS Assistant Administrator (AA) finds good cause to waive prior notice and an opportunity for public comment on this action, as notice and comment are unnecessary and contrary to the public interest. Such procedures are unnecessary because the rule that established the commercial season, ACL, and accountability measure for red snapper has already been subject to notice and comment, and all that remains is to notify the public of the reopening. Such procedures are contrary to the public interest because NMFS's updated information shows that the commercial harvest was prematurely closed, and this action should be immediately implemented to allow the commercial fishers the opportunity to harvest the commercial ACL over the 4-day reopening period.

For the aforementioned reasons, the AA also finds good cause to waive the 30-day delay in the effectiveness of this action under 5 U.S.C. 553(d)(3).

Authority: 16 U.S.C. 1801 *et seq.*

Dated: October 28, 2021.

Jennifer M. Wallace,

Acting Director, Office of Sustainable Fisheries, National Marine Fisheries Service.

[FR Doc. 2021–23863 Filed 10–28–21; 4:15 pm]

BILLING CODE 3510–22–P

DEPARTMENT OF COMMERCE

National Oceanic and Atmospheric Administration

50 CFR Part 622

[Docket No. 210907–0179]

RIN 0648–BH72

Fisheries of the Caribbean, Gulf of Mexico, and South Atlantic; Electronic Reporting for Federally Permitted Charter Vessels and Headboats in Gulf of Mexico Fisheries

AGENCY: National Marine Fisheries Service (NMFS), National Oceanic and Atmospheric Administration (NOAA), Commerce.

ACTION: Final rule; delay of effective date.

SUMMARY: NMFS further delays the effective date for previously approved vessel location tracking requirements applicable to an owner or operator of charter vessel or headboat for which NMFS has issued a valid Federal charter vessel/headboat permit for federally managed reef fish or coastal migratory pelagic (CMP) species in the Gulf of Mexico (Gulf). This delay of the effective date will provide additional time for NMFS to complete testing of an additional vessel location tracking unit and provide additional time for litigation challenging these requirements to progress.

DATES: The effective date for the amendments to §§ 622.26(b)(5) and 622.374(b)(5)(ii) through (v) that published July 21, 2020 (85 FR 44005), and delayed indefinitely, made effective December 13, 2021, on September 14, 2021 (86 FR 51014), is delayed until March 1, 2022.

ADDRESSES: Electronic copies of the Gulf For-hire Reporting Amendment may be obtained from *www.regulations.gov* or the Southeast Regional Office website at *https://www.fisheries.noaa.gov/southeast/et.*

The Gulf For-hire Reporting Amendment includes an environmental assessment, regulatory impact review, Regulatory Flexibility Act analysis, and fishery impact statement.

The final rule that published on July 21, 2020 (85 FR 44005), and other related rulemaking documents, may be obtained from *www.regulations.gov,* by searching ''RIN 0648–BH72.''

FOR FURTHER INFORMATION CONTACT: Rich Malinowski, NMFS Southeast Regional Office, telephone: 727–824–5305, or email: *rich.malinowski@noaa.gov.*

SUPPLEMENTARY INFORMATION: NMFS is delaying the effective date to March 1, 2022, for the previously approved vessel location tracking requirements, hereafter referred to as vessel monitoring system (VMS) requirements, that apply to an owner or operator of charter vessel or headboat for which NMFS has issued a valid Federal charter vessel/headboat permit for federally managed reef fish or CMP species in the Gulf.

The VMS requirements delayed by this final rule are based on the Gulf For-hire Reporting Amendment, which includes amendments to the Fishery Management Plans (FMPs) for the Reef Fish Resources of the Gulf of Mexico (Reef Fish FMP) and Coastal Migratory Pelagic (CMP) Resources of the Gulf of Mexico and Atlantic Region (CMP FMP). The CMP fishery in the Gulf is managed under the CMP FMP, an FMP jointly developed by the Gulf of Mexico Fishery Management Council (Gulf Council) and the South Atlantic Fishery Management Council. The Gulf reef fish fishery is managed under the Reef Fish FMP, which is developed by the Gulf Council. These FMPs are implemented by NMFS through regulations at 50 CFR part 622 under the authority of the Magnuson-Stevens Fishery Conservation and Management Act (Magnuson-Stevens Act).

On July 21, 2020, NMFS published the final rule to implement the Gulf For-hire Reporting Amendment (85 FR 44005). That final rule summarized the management measures described in the Gulf For-hire Reporting Amendment and implemented by NMFS. However, the July 21, 2020, final rule delayed indefinitely the effectiveness of VMS requirements in 50 CFR 622.26(b)(5) and 622.374(b)(5)(ii) through (v), which require the use of a cellular or satellite VMS, to allow time for NMFS to test and approve cellular VMS units.

NMFS has now approved two cellular VMS units and continues to test a third unit. Therefore, on September 14, 2021, NMFS published in the **Federal Register**, a final rule announcing a December 13, 2021, effective date for the VMS requirements (86 FR 51014). On October 4, 2021, NMFS received a petition to delay further the effective date of these requirements until March 22, 2022. The petitioners are plaintiffs in a lawsuit that challenges several aspects of the July 21, 2020, rule, including the VMS requirements (*Mexican Gulf Fishing Co.* v. *Dep't of Commerce,* Civil Action No. 2:20–cv–2312 (E.D. La)). Written arguments in that litigation will be complete in early November and the petitioners request the delay to allow time for the court to issue a ruling. NMFS has determined that it is appropriate to delay the effective date of the VMS requirements until March 1, 2022. This will allow time for NMFS to finish testing the third cellular VMS unit, which will provide more options to permit holders, and additional time for the litigation to progress, but will also ensure that vessels are equipped with these units before the busy spring break season begins. NMFS anticipates an increase in Gulf for-hire trips during the March 2022 spring break season but will not have the ability to effectively validate those trips if the VMS requirements are not implemented by March 1, 2022. Therefore, NMFS is delaying the effective date of 50 CFR 622.26(b)(5) and 622.374(b)(5)(ii) through (v) until March 1, 2022.

Administrative Procedure Act

To the extent that 5 U.S.C. 553 applies to this action, it is exempt from notice and comment because it constitutes a rule of procedure under 5 U.S.C. 553(b)(A). Alternatively, the NMFS Assistant Administrator (AA) also finds that there is good cause to waive the requirements to provide prior notice and opportunity for public comment pursuant to the authority set forth in 5 U.S.C. 553(b)(B), because such procedures on this temporary delay are unnecessary and contrary to public interest. Such procedures are unnecessary because this final rule only delays the effective date of VMS requirements that NMFS already provided prior notice and an opportunity for public comment in the July 21, 2020, final rule (see **DATES** section). Such procedures would also be contrary to the public interest because the VMS requirements currently go into effect on December 13, 2021, and there is a need to immediately implement this action to delay the effective date of the final rule at 86 FR 51014 (September 14, 2021) and to provide notice of the delay to affected fishery participants.

For these same reasons, the AA also finds good cause to waive the 30-day delay in the effectiveness of this action under 5 U.S.C. 553(d)(3).

Authority: 16 U.S.C. 1801 *et seq.*

Dated: October 28, 2021.

Samuel D. Rauch, III,

Deputy Assistant Administrator for Regulatory Programs, National Marine Fisheries Service.

[FR Doc. 2021–23877 Filed 10–28–21; 4:15 pm]

BILLING CODE 3510–22–P

DEPARTMENT OF COMMERCE

National Oceanic and Atmospheric Administration

50 CFR Part 648

[RTID 0648–XB536]

Fisheries of the Northeastern United States; Summer Flounder Fishery; Quota Transfer From NC to CT

AGENCY: National Marine Fisheries Service (NMFS), National Oceanic and Atmospheric Administration (NOAA), Commerce.

ACTION: Notification of quota transfer.

SUMMARY: NMFS announces that the State of North Carolina is transferring a portion of its 2021 commercial summer flounder quota to the State of Connecticut. This adjustment to the 2021 fishing year quota is necessary to comply with the Summer Flounder, Scup, and Black Sea Bass Fishery Management Plan quota transfer provisions. This announcement informs the public of the revised 2021 commercial quotas for North Carolina and Connecticut.

DATES: Effective October 28, 2021 through December 31, 2021.

FOR FURTHER INFORMATION CONTACT: Laura Hansen, Fishery Management Specialist, (978) 281–9225.

SUPPLEMENTARY INFORMATION: Regulations governing the summer flounder fishery are found in 50 CFR 648.100 through 648.110. These regulations require annual specification of a commercial quota that is apportioned among the coastal states from Maine through North Carolina. The process to set the annual commercial quota and the percent allocated to each state is described in § 648.102 and final 2021 allocations were published on December 21, 2020 (85 FR 82946).

The final rule implementing Amendment 5 to the Summer Flounder Fishery Management Plan (FMP), as published in the **Federal Register** on December 17, 1993 (58 FR 65936), provided a mechanism for transferring summer flounder commercial quota from one state to another. Two or more states, under mutual agreement and with the concurrence of the NMFS Greater Atlantic Regional Administrator, can transfer or combine summer flounder commercial quota under § 648.102(c)(2). The Regional Administrator is required to consider three criteria in the evaluation of requests for quota transfers or combinations: The transfer or combinations would not preclude the overall annual quota from being fully harvested; the transfer addresses an unforeseen variation or contingency in the fishery; and the transfer is consistent with the objectives of the FMP and the Magnuson-Stevens Fishery Conservation and Management Act. The Regional Administrator has determined these three criteria have been met for the transfer approved in this notification.

North Carolina is transferring 20,000 lb (9,072 kg) to Connecticut through mutual agreement of the states. This transfer was requested so that Connecticut would not exceed its 2021 commercial quota. The revised summer flounder quotas for 2021 are: North Carolina, 2,954,923 lb (1,340,331 kg); and, Connecticut, 599,376 lb (271,872 kg).

Classification

NMFS issues this action pursuant to section 305(d) of the Magnuson-Stevens Act. This action is required by 50 CFR 648.162(e)(1)(i) through (iii), which was issued pursuant to section 304(b), and is exempted from review under Executive Order 12866.

Authority: 16 U.S.C. 1801 *et seq.*

Dated: October 27, 2021.

Jennifer M. Wallace,

Acting Director, Office of Sustainable Fisheries, National Marine Fisheries Service.

[FR Doc. 2021–23819 Filed 10–28–21; 4:15 pm]

BILLING CODE 3510–22–P

Proposed Rules

Federal Register

Vol. 86, No. 209

Tuesday, November 2, 2021

This section of the FEDERAL REGISTER contains notices to the public of the proposed issuance of rules and regulations. The purpose of these notices is to give interested persons an opportunity to participate in the rule making prior to the adoption of the final rules.

DEPARTMENT OF ENERGY

10 CFR Part 430

[EERE–2019–BT–TP–0012]

RIN 1904–AD86

Energy Conservation Program: Test Procedure for External Power Supplies

AGENCY: Office of Energy Efficiency and Renewable Energy, Department of Energy.

ACTION: Supplemental notice of proposed rulemaking and request for comment.

SUMMARY: On December 6, 2019, the U.S. Department of Energy (''DOE'') published a notice of proposed rulemaking (''NOPR'') proposing certain amendments to its test procedure for external power supplies (''EPS'' or ''EPSs''). In this supplemental notice of proposed rulemaking (''SNOPR''), DOE is proposing additional amendments and modifications to certain proposals presented in the SNOPR. In this document, DOE is proposing to remove reference to direct operation and indirect operation Class A EPSs in the scope; simplify and more explicitly align the scope of the test procedure with the scope of the energy conservation standards; provide additional specifications for the testing of EPSs that do not ship with an output cord; and align the testing requirements for programmable power supplies with those for Universal Serial Bus Power Delivery (''USB–PD'') EPSs. Further, DOE proposes to maintain the location of certain definitions for which it proposed in the NOPR to relocate. DOE is seeking comment from interested parties on the proposals.

DATES: DOE will accept comments, data, and information regarding this SNOPR no later than January 3, 2022. See section [V], ''Public Participation,'' for details. DOE will hold a webinar on Wednesday, December 15, 2021 from 12:30 p.m. to 4:00 p.m. See section V, ''Public Participation,'' for webinar registration information, participant instructions, and information about the capabilities available to webinar participants. If no participants register for the webinar, it will be cancelled.

ADDRESSES: Interested persons are encouraged to submit comments using the Federal eRulemaking Portal at *www.regulations.gov.* Follow the instructions for submitting comments. Alternatively, interested persons may submit comments, identified by docket number EERE–2019–BT–TP–2012, by any of the following methods:

(1) *Federal eRulemaking Portal: www.regulations.gov.* Follow the instructions for submitting comments.

(2) *Email:* To *EPS2019TP0012@ee.doe.gov.* Include the docket number EERE–2019–BT–TP–2012 in the subject line of the message.

No telefacsimilies (faxes) will be accepted. For detailed instructions on submitting comments and additional information on this process, see section V of this document.

Although DOE has routinely accepted public comment submissions through a variety of mechanisms, including postal mail and hand delivery/courier, the Department has found it necessary to make temporary modifications to the comment submission process in light of the ongoing COVID–19 pandemic. DOE is currently suspending receipt of public comments via postal mail and hand delivery/courier, and instead, the Department is only accepting electronic submissions at this time. If a commenter finds that this change poses an undue hardship, please contact Appliance Standards Program staff at (202) 586–1445 to discuss the need for alternative arrangements. Once the COVID–19 pandemic health emergency is resolved, DOE anticipates resuming all of its regular options for public comment submission, including postal mail and hand delivery/courier.

Docket: The docket, which includes **Federal Register** notices, public meeting attendee lists and transcripts (if a public meeting is held), comments, and other supporting documents/materials, is available for review at *www.regulations.gov.* All documents in the docket are listed in the *www.regulations.gov* index. However, some documents listed in the index, such as those containing information that is exempt from public disclosure, may not be publicly available.

The docket web page can be found at *www.regulations.gov/docket?D=EERE-2019-BT-TP-0012.* The docket web page contains instructions on how to access all documents, including public comments, in the docket. See section [V] for information on how to submit comments through *www.regulations.gov.*

FOR FURTHER INFORMATION CONTACT:

Mr. Jeremy Dommu, U.S. Department of Energy, Office of Energy Efficiency and Renewable Energy, Building Technologies Office, EE–5B, 1000 Independence Avenue SW, Washington, DC 20585–0121. Telephone: (202) 586–9870. Email *ApplianceStandards Questions@ee.doe.gov.*

Ms. Kristin Koernig, U.S. Department of Energy, Office of the General Counsel, GC–33, 1000 Independence Avenue SW, Washington, DC 20585–0121. Telephone: (202) 586–3593. Email: *kristin.koernig@hq.doe.gov.*

For further information on how to submit a comment, review other public comments and the docket, or participate in a public meeting (if one is held), contact the Appliance and Equipment Standards Program staff at (202) 287–1445 or by email: *ApplianceStandardsQuestions@ee.doe.gov.*

SUPPLEMENTARY INFORMATION: This SNOPR proposes to maintain a previous incorporation by reference in 10 CFR part 430 in the following industry standard:

International Electrotechnical Commission (''IEC'') standard 62301 (''IEC 62301''), *Household electrical appliances—Measurement of standby power,* (Edition 2.0, 2011–01).

Copies of IEC 62301 (Second Edition) can be obtained from the American National Standards Institute, 25 W 43rd Street, 4th Floor, New York, NY 10036, (212) 642–4900, or go to *https://webstore.ansi.org.*

For a further discussion of this standard, see section IV.M.

Table of Contents

I. Authority and Background
A. Authority
B. Background
II. Synopsis of the Supplemental Notice of Proposed Rulemaking
III. Discussion
A. Scope of Applicability
1. Scope of Appendix Z

2. Devices for Which the Primary Load of the Converted Voltage Is Not Delivered to a Separate End Use Product
B. Location of EPS Definitions
C. Testing EPSs That Are Not Supplied With an Output Cord
D. USB–PD EPSs With Additional Optional Voltages and Currents and Programmable Power Supplies
E. Test Procedure Costs and Impact
1. Scope of Applicability
2. Testing EPSs That Are Not Supplied With an Output Cord
3. USB–PD With Additional Optional Voltages and Currents and Programmable Power Supplies
F. Compliance Date and Waivers
IV. Procedural Issues and Regulatory Review
A. Review Under Executive Order 12866
B. Review Under the Regulatory Flexibility Act
C. Review Under the Paperwork Reduction Act of 1995
D. Review Under the National Environmental Policy Act of 1969
E. Review Under Executive Order 13132
F. Review Under Executive Order 12988
G. Review Under the Unfunded Mandates Reform Act of 1995
H. Review Under the Treasury and General Government Appropriations Act, 1999
I. Review Under Executive Order 12630
J. Review Under Treasury and General Government Appropriations Act, 2001
K. Review Under Executive Order 13211
L. Review Under Section 32 of the Federal Energy Administration Act of 1974
M. Description of Materials Incorporated by Reference
V. Public Participation
A. Participation in the Webinar
B. Procedure for Submitting Prepared General Statements for Distribution
C. Conduct of the Webinar
D. Submission of Comments
E. Issues on Which DOE Seeks Comment
VI. Approval of the Office of the Secretary

I. Authority and Background

An EPS is a ''covered product'' for which DOE is authorized to establish and amend energy conservation standards and test procedures. (42 U.S.C. 6295(u)(1)(A)) DOE's energy conservation standards and test procedures for EPSs are currently prescribed at 10 CFR 430.32(w) and 430.23(bb), respectively. The following sections discuss DOE's authority to establish test procedures for EPSs and relevant background information regarding DOE's consideration of test procedures for this product.

A. Authority

The Energy Policy and Conservation Act, as amended (''EPCA''),[1] authorizes DOE to regulate the energy efficiency of certain consumer products and types of industrial equipment. (42 U.S.C. 6291–6317) Title III, Part B [2] of EPCA established the Energy Conservation Program for Consumer Products Other Than Automobiles, which sets forth provisions designed to improve energy efficiency for a variety of products and equipment. These products include EPSs, the subject of this document. (42 U.S.C. 6291(36)(A); 42 U.S.C. 6295(u))

EPCA's energy conservation program consists essentially of four parts: (1) Testing, (2) labeling, (3) Federal energy conservation standards, and (4) certification and enforcement procedures. Relevant provisions of EPCA specifically include definitions (42 U.S.C. 6291), energy conservation standards (42 U.S.C. 6295), test procedures (42 U.S.C. 6293), labeling provisions (42 U.S.C. 6294), and the authority to require information and reports from manufacturers (42 U.S.C. 6296).

The Federal testing requirements consist of test procedures that manufacturers of covered products must use as the basis for: (1) Certifying to DOE that their products comply with the applicable energy conservation standards adopted pursuant to EPCA (42 U.S.C. 6295(s)), and (2) making representations about the efficiency of those consumer products (42 U.S.C. 6293(c)). Similarly, DOE must use these test procedures to determine whether the products comply with relevant standards promulgated under EPCA. (42 U.S.C. 6295(s))

Federal energy efficiency requirements for covered products established under EPCA generally supersede State laws and regulations concerning energy conservation testing, labeling, and standards. (42 U.S.C. 6297) DOE may, however, grant waivers of Federal preemption for particular State laws or regulations, in accordance with the procedures and other provisions of EPCA. (42 U.S.C. 6297(d))

Under 42 U.S.C. 6293, EPCA sets forth the criteria and procedures DOE must follow when prescribing or amending test procedures for covered products. EPCA requires that any test procedures prescribed or amended under this section be reasonably designed to produce test results which measure energy efficiency, energy use or estimated annual operating cost of a covered product during a representative average use cycle or period of use and not be unduly burdensome to conduct. (42 U.S.C. 6293(b)(3))

In addition, EPCA requires that DOE amend its test procedures for all covered products to integrate measures of standby mode and off-mode energy consumption. (42 U.S.C. 6295(gg)(2)(A)) Standby mode and off-mode energy consumption must be incorporated into the overall energy efficiency, energy consumption, or other energy descriptor for each covered product unless the current test procedures already account for and incorporate standby mode and off-mode energy consumption or such integration is technically infeasible. (42 U.S.C. 6295(gg)(2)(A)(i)) If an integrated test procedure is technically infeasible, DOE must prescribe separate standby mode and off-mode energy use test procedures for the covered product, if technically feasible. (42 U.S.C. 6295(gg)(2)(A)(ii)) Any such amendment must consider the most current versions of International Electrotechnical Commission (''IEC'') Standard 62301 [3] and IEC Standard 62087 [4] as applicable. (42 U.S.C. 6295(gg)(2)(A))

The Energy Policy Act of 2005 (''EPACT 2005''), Public Law 109–58 (August 8, 2005), amended EPCA by adding provisions related to EPSs. Among these provisions were a definition of EPS and a requirement that DOE prescribe ''definitions and test procedures for the power use of battery chargers and external power supplies.'' (42 U.S.C. 6295(u)(1)(A))

The Energy Independence and Security Act of 2007 (''EISA 2007''), Public Law 110–140 (December 19, 2007) later amended EPCA by modifying the EPS-related definitions prescribed at 42 U.S.C. 6291. While section 135(a)(3) of EPACT 2005 defined an EPS as ''an external power supply circuit that is used to convert household electric current into DC current or lower-voltage alternating current (''AC'') to operate a consumer product,'' section 301 of EISA 2007 further amended this definition by creating a subset of EPSs called Class A EPSs. EISA 2007 defined this subset of products as those EPSs that, in addition to meeting several other requirements common to all EPSs, are ''able to convert [line voltage AC] to only 1 AC or DC output voltage at a time'' and have ''nameplate output power that is less than or equal to 250 watts.'' (42 U.S.C. 6291(36)(C)(i)) As part of these amendments, EISA 2007 prescribed minimum standards for these products (hereafter referred to as ''Level IV'' standards based on the marking provisions detailed under 10 CFR 430.32(w)(4)) and directed DOE to publish a final rule to determine

[1] All references to EPCA in this document refer to the statute as amended through the Energy Act of 2020, Public Law 116–260 (Dec. 27, 2020).

[2] For editorial reasons, upon codification in the U.S. Code, Part B was redesignated Part A.

[3] IEC 62301, *Household electrical appliances—Measurement of standby power* (Edition 2.0, 2011–01).

[4] IEC 62087, *Methods of measurement for the power consumption of audio, video, and related equipment* (Edition 3.0, 2011–04).

whether to amend these standards.[5] (42 U.S.C. 6295(u)(3)(A) and (D)) EISA 2007 also required DOE to publish a second rule to determine whether the standards then in effect should be amended. (42 U.S.C. 6295(u)(3)(D)(ii))

EISA 2007 also amended EPCA by defining the terms ''active mode,'' ''standby mode,'' and ''off-mode.'' Each of these modes corresponds to the operational status of a given product—*e.g.,* whether it is (1) plugged into AC mains and switched ''on'' and performing its intended function, (2) plugged in but not performing its intended function (*i.e.,* simply standing by to be operated), or (3) plugged in, but switched ''off,'' if a manual on-off switch is present. Additionally, EISA 2007 required DOE to amend its test procedure to ensure that standby and off-mode energy consumption are measured. It also authorized DOE to amend, by rule, the definitions for active, standby, and off-mode, considering the most current versions of IEC Standards 62301 and 62087. (42 U.S.C. 6295(gg)(2)(A) (incorporating EISA 2007 amendments related to standby and off-mode energy)).

Following the amendments to EPCA under EISA 2007, Congress further amended EPCA to exclude EPSs used for certain security and life safety alarms and surveillance systems manufactured prior to July 1, 2017, from no-load standards. Public Law 111–360 (January 4, 2011). EPCA's EPS provisions were again amended by the Power and Security Systems (''PASS'') Act, which extended the rulemaking deadline and effective date established under the EISA 2007 amendments from July 1, 2015 and July 1, 2017, to July 1, 2021 and July 1, 2023, respectively. Public Law 115–78 (November 2, 2017); 131 Stat. 1256, 1256; 42 U.S.C. 6295(u)(3)(D)(ii)). The PASS Act also extended the exclusion of certain security and life safety alarms and surveillance systems from no-load standards until the effective date of the final rule issued under 42 U.S.C. 6295(u)(3)(D)(ii) and allowed the Secretary to treat some or all external power supplies designed to be connected to a security or life safety alarm or surveillance system as a separate product class or to further extend the exclusion. (42 U.S.C. 6295(u)(3)(E)(ii) and (iv))

Most recently, on January 12, 2018, the EPS Improvement Act of 2017, Public Law 115–115, amended EPCA to exclude the following devices from the EPS definition: Power supply circuits, drivers, or devices that are designed exclusively to be connected to and power (1) light-emitting diodes providing illumination, (2) organic light-emitting diodes providing illumination, or (3) ceiling fans using direct current motors.[6] (42 U.S.C. 6291(36)(A)(ii))

EPCA also requires that, at least once every 7 years, DOE evaluate test procedures for each type of covered product, including EPSs, to determine whether amended test procedures would more accurately or fully comply with the requirements for the test procedures to not be unduly burdensome to conduct and be reasonably designed to produce test results that reflect energy efficiency, energy use, and estimated operating costs during a representative average use cycle or period of use. (42 U.S.C. 6293(b)(1)(A))

If the Secretary determines, on her own behalf or in response to a petition by any interested person, that a test procedure should be prescribed or amended, the Secretary shall promptly publish in the **Federal Register** proposed test procedures and afford interested persons an opportunity to present oral and written data, views, and arguments with respect to such procedures. The comment period on a proposed rule to amend a test procedure shall be at least 60 days and may not exceed 270 days. In prescribing or amending a test procedure, the Secretary shall take into account such information as the Secretary determines relevant to such procedure, including technological developments relating to energy use or energy efficiency of the type (or class) of covered products involved. (42 U.S.C. 6293(b)(2)). If DOE determines that test procedure revisions are not appropriate, DOE must publish its determination not to amend the test procedures.

B. Background

DOE's current EPS test procedures appear at 10 CFR part 430, subpart B, appendix Z, ''Uniform Test Method for Measuring the Energy Consumption of External Power Supplies'' (''Appendix Z'').

DOE published a NOPR to amend the test procedure on December 6, 2019. 80 FR 67106 (''December 2019 NOPR''). In the December 2019 NOPR, DOE proposed to add a definition for ''commercial and industrial power supply'' in its regulations to differentiate between EPSs, which are covered products, and non-consumer power supplies, which are not covered products. DOE also proposed to create a definition to address an adaptive EPS that conforms to the USB–PD specifications and revise its procedure to address their testing in a manner more representative of their actual use. Further, the proposed revisions would provide more specific instructions for testing single-voltage EPSs that have multiple output busses. Lastly, DOE proposed to reorganize the test procedure to centralize definitions, consolidate generally applicable requirements, and better delineate requirements for single-voltage, multiple-voltage, and adaptive EPSs. DOE sought comment from interested parties on the proposal. DOE held a public meeting related to this NOPR on December 11, 2019 (''December 2019 NOPR public meeting'').

DOE received comments in response to the December 2019 NOPR from the interested parties listed in Table I.1.

TABLE I–I—WRITTEN COMMENTS TO THE DECEMBER 2019 NOPR

Commenter(s)	Reference in this SNOPR	Commenter type
Pacific Gas and Electric, Southern California Edison, San Diego Gas and Electric.	CA IOUs	Utility Association.
Canadian Standards Association	CSA	Efficiency Organization.
Consumer Technology Association	CTA	Trade Association.
Information Technology Industry Council	ITI	Trade Association.
National Electrical Manufacturers Association, American Lighting Association.	NEMA/ALA	Trade Association.

[5] The international efficiency markings on which DOE's marking requirements are based consist of a series of Roman numerals (I–VI) and provide a global uniform system for power supply manufacturers to use that indicates compliance with a specified minimum energy performance standard. *www.regulations.gov/document?D=EERE-2008-BT-STD-0005-0218.*

[6] DOE amended its regulations to reflect the changes introduced by the PASS Act and EPS Improvement Act. 84 FR 437 (January 29, 2018).

TABLE I–I—WRITTEN COMMENTS TO THE DECEMBER 2019 NOPR—Continued

Commenter(s)	Reference in this SNOPR	Commenter type
USB Implementers Forum	USB–IF	Trade Association.

A parenthetical reference at the end of a comment quotation or paraphrase provides the location of the item in the public record.[7] This SNOPR addresses only those comments relevant to the proposals laid out in this document; all other relevant comments will be addressed in the final rule. The regulatory text as amended by the amendments proposed in both the December 2019 NOPR and this SNOPR is presented at the end of this document for the convenience of review of all the proposed amendments.

II. Synopsis of the Supplemental Notice of Proposed Rulemaking

In this SNOPR, DOE proposes to supplement (or replace) those proposed amendments from the December 2019 NOPR with further amendments that would provide as follows:

(1) Remove reference in the scope section of appendix Z to direct operation and indirect operation Class A EPSs because there is no distinction in how these EPSs are tested.

(2) More explicitly align the test procedure with the scope of the energy conservation standards set forth at 10 CFR 430.32(w)(1) by excluding from testing devices for which the primary load of the converted voltage within the device is not delivered to a separate end use product.

(3) Specify testing requirements for EPSs that are packaged without an output cord to provide explicitly that these EPSs are tested with an output cord that is recommended for use by the manufacturer.

(4) Modify the proposal from the December 2019 NOPR to define ''USB–PD'' EPS so as to include programmable power supplies (''PPSs'') and USB–PD EPSs with optional voltages and currents; and further amend the definition of ''nameplate output power'' to specify that USB–PD EPSs must be tested at the lowest nameplate output voltage, which can be as low as 3.3 volts for PPSs, rather than at 5 volts (as was proposed in the December 2019 NOPR).

Additionally, DOE is modifying the December 2019 NOPR's proposal to relocate certain definitions. Specifically, DOE is no longer proposing to relocate the definitions of ''Class A external power supply'', ''basic-voltage external power supply'', ''direct operation external power supply'', ''indirect operation external power supply'', and ''low-voltage external power supply'' at 10 CFR 430.2 rather than include them in appendix Z.

The actions proposed in this SNOPR are summarized in Table II.1 and addressed in detail in section III of this document. Unless otherwise provided, DOE continues to propose the amendments presented in the December 2019 NOPR. To facilitate commenter review, the proposed regulatory text at the end of this document provides the proposed regulatory text from the December 2019 NOPR as modified by the proposals in this SNOPR.

TABLE II–I—SUMMARY OF CHANGES IN PROPOSED TEST PROCEDURE RELATIVE TO CURRENT TEST PROCEDURE AND TO AMENDMENTS PROPOSED IN THE DECEMBER 2019 NOPR

Current DOE test procedure	December 2019 NOPR proposals	Proposed test procedure	Attribution
Specifies that the scope of the test procedure includes direct operation EPSs and indirect operation Class A EPSs.	Not addressed	Deletes the specific reference to direct operation EPS and indirect operation Class A EPS.	Response to stakeholder comment to more explicitly define the scope of the test procedure.
Does not explicitly exclude testing of devices for which the primary load of the converted voltage within the device is not delivered to a separate end use product.	Specified that components and circuits unrelated to EPS functionality may be disconnected during testing as long as the disconnection does not impact the functionality of the EPS itself.	Excludes devices for which the primary load of the converted voltage within the device is not delivered to a separate end use product.	Response to stakeholder comment to more explicitly define the scope of the test procedure.
Does not include definitions of ''adaptive external power supply'', ''basic-voltage external power supply'', ''direct operation external power supply'', ''indirect operation external power supply'', and ''low-voltage external power supply''. These definitions are specified in 10 CFR 430.2.	Proposed to move all of these definitions to the EPS test procedure at appendix Z.	Proposes to retain all of these definitions at 10 CFR 430.2 except ''adaptive external power supply''.	Improve readability and applicability of the test procedure.
Does not include definition of Class A EPSs, which is currently specified in 10 CFR 430.2.	Proposed inclusion of Class A EPS definition in appendix Z while also retaining it in 10 CFR 430.2.	Proposes retaining Class A EPS definition in 10 CFR 430.2 only and not include it in appendix Z.	Improve readability and applicability of the test procedure.

[7] The parenthetical reference provides a reference for information located in the docket of DOE's rulemaking for the EPS test procedure. (Docket No. EERE–2019–BT–TP–0012, which is maintained at *www.regulations.gov*). The references are arranged as follows: (Commenter name, comment docket ID number, page of that document).

TABLE II–I—SUMMARY OF CHANGES IN PROPOSED TEST PROCEDURE RELATIVE TO CURRENT TEST PROCEDURE AND TO AMENDMENTS PROPOSED IN THE DECEMBER 2019 NOPR—Continued

Current DOE test procedure	December 2019 NOPR proposals	Proposed test procedure	Attribution
Does not explicitly provide instructions for testing EPSs that are not supplied with output cords.. 10 CFR part 430, subpart B, appendix Z (generally).	Proposed to require EPSs that are not supplied with an output cord to test at the output electrical contact that can be connected to a physical wire.	Requires EPSs that are not supplied with an output cord to test with an output cord recommended for use by the manufacturer.	Improve representativeness of test procedure.
Requires adaptive EPSs that meet the IEC 62680–1–2 specification to test at 3 amps for the 100% loading condition at the lowest operating output voltage of 5 volts.	Proposed to define an adaptive EPS that meets the voltage/current specifications of IEC 62680–1–2 as a ''USB–PD EPS'' and require that it be tested at 2 amps for the 100% loading condition at the lowest operating output voltage of 5 volts.	Defines an adaptive EPS that meets the voltage/current specifications of IEC 62680–1–2 as a ''USB–PD EPS'' and requires that it be tested at 2 amps for the 100% loading condition at the lowest operating output voltage, which can be as low as 3.3 volts.	Address waivers for adaptive EPSs and updates to industry test standard.

To the extent that DOE has tentatively determined that its proposed amendments would impact the measured energy efficiency of an EPS, DOE proposes that testing according to such amendments, if made final, would not be required until such time as compliance is required with new and amended energy conservation standards, should such standard be established or amended. DOE has also tentatively determined that the proposal, if adopted, would not be unduly burdensome to conduct. DOE's proposed actions are addressed in detail in section III of this document.

III. Discussion

A. Scope of Applicability

1. Scope of Appendix Z

In this SNOPR, DOE proposes to revise section 1 of appendix Z, which specifies the scope of the EPS test procedure, by removing references to direct operation EPSs and indirect operation Class A EPSs and instead state that the test procedure's scope includes all EPSs subject to the energy conservation standards set forth at 10 CFR 430.32(w)(1), except for those that meet the definition of a ''commercial and industrial power supply'' as defined in 10 CFR 430.2.

Deleting references to direct operation EPSs and indirect operation Class A EPSs from the scope section of the EPS test procedure at appendix Z would not alter the scope or the applicability of appendix Z. The test procedure to test direct operation and indirect operation EPSs is the same for both types of EPSs, and including these terms in the scope is unnecessary; therefore, DOE is proposing to remove the references.

Also, as part of the December 2019 NOPR, DOE proposed to define ''commercial and industrial power supply'' and exclude it from the definition of an EPS altogether. In this SNOPR, DOE proposes to maintain the current definition of an EPS and instead use the definition of a ''commercial and industrial power supply'' to exclude these EPSs from the scope of the appendix as described previously.

DOE requests feedback on its proposal to revise section 1 of appendix Z to remove references to direct operation EPSs and indirect operation Class A EPSs. DOE also requests feedback on its proposal to use the proposed definition of a ''commercial and industrial power supply'' to exclude such EPSs from the scope of the EPS test procedure.

2. Devices for Which the Primary Load of the Converted Voltage Is Not Delivered to a Separate End Use Product

In response to inquiries as to whether the EPS test procedure permits non-EPS-related functions to be disconnected when testing products with universal serial bus (''USB'') ports, DOE proposed in the December 2019 NOPR to specify that components and circuits unrelated to the EPS's functionality may be disconnected during testing as long as that disconnection does not impact the functionality of the EPS itself. 80 FR 67106, 67115 (December 6, 2019). For example, a surge protector with USB output ports may be tested with the surge protector circuit disconnected if it is distinct from the USB circuit and does not impact the EPS's functionality (*i.e.,* the circuit from household AC input to the USB output). *Id.*

Additionally, in a request for information (''RFI'') regarding the energy conservation standards for EPSs published on May 20, 2020 (''May 2020 RFI''), DOE solicited comment regarding how to differentiate between EPSs and products with power conversion as an auxiliary function. 85 FR 30636, 30639. DOE received comments that mostly supported the exclusion of devices with power conversion as an auxiliary function from EPS regulations.

In response to the December 2019 NOPR, CTA and NEMA/ALA raised concern that the proposed amendment would expand the scope of what is covered as an EPS as a result of what they understood to be a proposal to consider all devices with power conversion as an ancillary function (specifically products with USB, HDMI, CAT5, or similar ports) to be within the scope of EPS regulations. (CTA, No. 11 at pp. 3–4; NEMA/ALA, No. 12 at pp. 1–3, 6)

CTA commented that DOE's proposed addition of regulatory language referencing ''circuits'' in section 4(h) of the proposed amendments to appendix Z may lead to questions about the scope of the EPS regulations if DOE intends to further classify circuits as a type of EPS. (CTA, No. 11 at pp. 3–4) CTA also asserted that devices such as laptops, connected televisions, and mobile phone docking ports would potentially be brought under EPS regulations if devices with USB, HDMI, CAT5 or similar ports are considered EPSs. (CTA, No. 11 at p. 4) In addition, CTA raised the concern of potential double regulations for certain products that contain USB ports and are also subject to other energy conservations standards for another product, such as battery chargers. (CTA, No. 11 at p. 3) CTA recommended that DOE classify EPSs with other major functions into a separate product class, and state that such products are not subject to current EPS regulations. (CTA, No. 11 at p. 4)

NEMA/ALA stated that it would be impractical for DOE to enforce EPS regulations upon every product containing a USB, HDMI, or RJ–45 port.

(NEMA/ALA, No. 12 at p. 1) NEMA/ALA also raised the issue of double regulations, stating that many devices, including commercial devices, whose energy use or energy efficiency is already regulated under EPCA, contain ports that provide power as an ancillary function. (NEMA/ALA, No. 12 at pp. 1–2) NEMA/ALA suggested creating a definition for a ''non-primary power supply,'' or a similar term, that would encompass devices with power conversion as an ancillary function and exclude such devices from the definition of an EPS. (NEMA/ALA, No. 12 at pp. 2–3) NEMA/ALA also suggested amending the definition of an EPS to explicitly state that the presence of a USB, HDMI, or RJ–45 port (or similar) as a secondary or ancillary feature does not qualify the product as an EPS. (NEMA/ALA, No. 12 at pp. 5–6)

As discussed in section I.A of this document, EPCA defines EPS broadly as ''an external power supply circuit that is used to convert household electric current into DC current or lower-voltage AC current to operate a consumer product.'' (42 U.S.C. 6291(36)(A)(i)) The use of the term ''external power supply circuit'' in the proposed amendment to allow non-EPS functions to be disconnected would not change the scope of EPS regulations.

In response to the May 2020 RFI's solicitation for comment on devices with power conversion as an auxiliary function, The Power Tool Institute (''PTI'') and, separately, a collaboration of various industry commenters consisting of The Association of Home Appliance Manufacturers (''AHAM''), Information Technology Industry Council (''ITI''), Plumbing Manufacturers International (''PMI''), and PTI (collectively, the ''Joint Commenters'') asserted that such devices fall out of the scope of EPS regulations and should not be subject to regulations unless DOE were to prescribe a standard specific to the end-use product. (Docket No. EERE–2020–BT–STD–0006, PTI, No. 4 at p. 1; Docket No. EERE–2020–BT–STD–0006, Joint Commenters, No. 10 at p. 2) The Joint Commenters further opposed the development of regulations for EPSs that are components of a product. (Docket No. EERE–2020–BT–STD–0006, Joint Commenters, No. 10 at p. 2)

In related comments received in response to the May 2020 RFI, the Northwest Energy Efficiency Alliance (''NEEA''), Natural Resource Defense Council (''NRDC''), and the Appliance Standards Awareness Project (''ASAP'') (hereafter, ''NEEA/NRDC/ASAP'') and the CA IOUs commented that devices with power conversion as an auxiliary function are becoming increasingly more common on the market. (Docket No. EERE–2020–BT–STD–0006, NEEA/NRDC/ASAP, No. 6 at p. 12; Docket No. EERE–2020–BT–STD–0006, CA IOUs, No. 7 at pp. 8–9) NEEA/NRDC/ASAP asserted that these types of devices should be subject to EPS regulations. (Docket No. EERE–2020–BT–STD–0006, NEEA/NRDC/ASAP, No. 6 at p. 13) Additionally, NEEA/NRDC/ASAP stated that power supplies serving an auxiliary function in a device could consume significantly more energy in active and/or no-load modes as a result of these devices not being subject to EPS regulations. (Docket No. EERE–2020–BT–STD–0006, NEEA/NRDC/ASAP, No. 6 at pp. 12–13) The CA IOUs recommended that DOE evaluate the overall potential for covering products with power conversion as a secondary function and that DOE conduct a verification study to compare the energy performance of these types of devices to EPSs that are not included in a finished product as a secondary component. (Docket No. EERE–2020–BT–STD–0006, CA IOUs, No. 7 at pp. 8–9)

As discussed in section I.A of this document, EPCA defines ''external power supply'' as ''an external power supply circuit that is used to convert household electric current into DC current or lower-voltage AC current to operate a consumer product.'' (42 U.S.C. 6291(26)(A)(i)). The term does not include a power supply circuit, driver, or device that is designed exclusively to be connected to, and power: light-emitting diodes providing illumination; organic light-emitting diodes providing illumination; or ceiling fans using direct current motors. (42 U.S.C. 6291(26)(A)(ii)).

The proposed amendment in the December 2019 NOPR regarding the disconnection of components and circuits unrelated to the EPS functionality is for the purpose of providing additional instruction for the testing of EPSs that are currently subject to testing and that provide other functions unrelated to the power supply function. 84 FR 67106, 67115 (December 6, 2019). Use of the term ''circuit'' in the proposed direction that any functionality that is unrelated to the external power supply circuit may be disconnected during testing is consistent with the EPCA definition of an EPS. In the December 2019 NOPR, by way of example, DOE discussed an EPS that also provides the function of a surge protector with USB output ports as an example of an EPS with other major functions that may be disconnected during testing as long as that disconnection does not impact the functionality of the EPS itself. *Id.* DOE is maintaining the proposal as presented in the December 2019 NOPR.

In reviewing the comments to the NOPR as well as questions received via the Compliance Certification Management System, DOE also understands there may be uncertainty as to the devices subject to the test procedure. As noted, the test procedure applies to EPSs subject to the energy conservation standards at 10 CFR 430.32(w)(1). There are devices that are covered by the definition of EPS but that are not subject to the energy conservation standards and were not considered in the establishment of the energy conservation standards (*e.g.,* a television that has a USB port that also provides converted power). In order to provide further instruction regarding the scope of the test procedure, in addition to the proposed instruction regarding the disconnection of components and circuits unrelated to the EPS functionality, DOE proposes to add instructions as to certain devices excluded from the test procedure. Specifically, DOE proposes to specify that devices for which the primary load of the converted voltage within the device is not delivered to a separate end use product are not subject to the test procedure.

DOE intends for this proposed amendment to clarify that devices that provide power conversion only as an auxiliary operation (*e.g.,* televisions, laptop computers, and home appliances with USB output ports) are not subject to the test procedure. Devices containing USB output ports would remain in scope to the extent the USB output port represents the primary load of the device that houses the USB output port. Examples of such a device could include a surge protector with USB output ports, power-over-ethernet injectors, and wall outlets with USB output ports. As stated, DOE does not intend for this proposed amendment to change the existing scope but to instead provide manufacturers with additional certainty regarding those EPSs for which testing is required.

DOE requests comment on the proposed clarification in appendix Z to exclude explicitly those devices for which the primary load of the converted voltage within the device is not delivered to a separate end use product. Specifically, whether it adequately clarifies which devices are subject to the test procedure, and if not, how the test procedure could be further modified to provide further clarity regarding its scope.

B. Location of EPS Definitions

In the December 2019 NOPR, DOE proposed moving all EPS-related definitions that are currently defined in 10 CFR 430.2 to the EPS test procedure at appendix Z. 84 FR 67106, 67115 (December 6, 2019). Specifically, DOE proposed to move the definitions of ''adaptive external power supply'', ''basic-voltage external power supply'', ''direct operation external power supply'', ''indirect operation external power supply'', and ''low-voltage external power supply'' from 10 CFR 430.2 to appendix Z. DOE did not propose to amend these definitions. *Id.* However, in this SNOPR, DOE is no longer proposing such a relocation because, except for the term ''adaptive external power supply,'' these terms are not used elsewhere in the test procedure. Because the terms ''basic-voltage external power supply'', ''direct operation external power supply'', ''indirect operation external power supply'', and ''low-voltage external power supply'' are not used in the test procedure, those terms are more appropriately located in the general definitions section at 10 CFR 430.2. The term ''adaptive external power supply'' is specific to the test procedure, and, for ease of reference, DOE is proposing to move that definition to appendix Z.

In the December 2019 NOPR, DOE also proposed to include the definition of ''Class A external power supply'' in appendix Z while also retaining it at 10 CFR 430.2, where it currently exists. 84 FR 67106, 67115 (December 6, 2019). However, in this SNOPR, DOE proposes to retain the definition of a ''Class A external power supply'' only at 10 CFR 430.2 and not include it in the EPS test procedure at appendix Z because this term is not used in the EPS test procedure itself.

DOE requests feedback on maintaining the definitions of ''Class A external power supply'', ''basic-voltage external power supply'', ''direct operation external power supply'', ''indirect operation external power supply'', and ''low-voltage external power supply'' in their current location at 10 CFR 430.2. DOE also requests comment on the proposed relocation of the definition of ''adaptive external power supply'' to appendix Z.

C. Testing EPSs That Are Not Supplied With an Output Cord

The current EPS test procedure requires EPSs to be tested with the DC output cord supplied by the manufacturer. appendix Z, sec. 4(a)(i)(A). In a final rule published August 25, 2015 (''August 2015 final rule''), which established the current requirements regarding testing with the power cord, DOE stated that allowing an EPS to be tested without the power cord would ignore the losses associated with the cord and allow for an EPS that is less efficient than the efficiency standards intended. 80 FR 51424, 51429. Accordingly, DOE specified that EPSs must be tested with the output cord supplied by the manufacturer. *Id.*

DOE received multiple stakeholder inquiries regarding how to test EPSs that are not shipped with a DC output cord. In response to these inquiries, in the December 2019 NOPR, DOE proposed to amend the test procedure to explicitly state that if a wire or cord is not supplied by the manufacturer, then the EPS shall be tested at the output electrical contact that can be connected to a physical wire. 84 FR 67106, 67124 (December 6, 2019). DOE did not receive any comments on this amendment.

Since the analysis conducted in support of the December 2019 NOPR, DOE has observed an increasing number of EPSs that are not packaged or supplied with an accompanying DC output cord.[8] [9] [10] For example, as USB EPSs become more ubiquitous, it is likely that many consumers already own a USB cable, thereby reducing the demand for EPSs to be supplied with a USB output cord. The current test procedure does not provide explicit instructions to address this scenario, and DOE recognizes that the absence of these instructions may result in manufacturers testing such an EPS without the output cord, when in actual use they are likely used in conjunction with a cord already owned by the consumer. Testing an EPS without an output cord would ignore the losses that are associated with using the EPS with the cord in the real-world and, therefore, the rated efficiency of such an EPS would not be representative of real-world use (*i.e.,* the rated efficiency of an EPS tested without an output cord would be higher than that seen in real-world use). Additionally, the type of cord used to test such an EPS would also impact the measured efficiency because different cords may have different cord losses, thereby impacting the repeatability and reproducibility of the test procedure.

As such, in order to improve the representativeness and repeatability and reproducibility of the EPS test procedure, DOE is proposing to revise the procedure to explicitly state that if an EPS is not supplied with an output cord, then the EPS shall be tested with an output cord that is recommended for use by the manufacturer. If an EPS contains multiple output busses, each output bus would be tested with an output cord that is recommended for use by the manufacturer. Specifically, proposed Section 4(g)(1) of appendix Z would require testing each output port of an external power supply at the end of the wire or cord that connects to an end-use product, regardless of whether the end of the wire or cord is integrated into an end-use product or plugs into and out of an end-use product. If a separate wire or cord is provided by the manufacturer to connect the external power supply to an end-use product, this wire or cord would be used and testing would be performed at the end of the cord that connects to an end-use product. If a wire or cord is not supplied by the manufacturer, the external power supply would be tested with an output cord recommended for use by the manufacturer.

As indicated in the August 2015 final rule, the choice of power cord when testing may impact the measured energy use of an EPS. 80 FR 51424, 51429 (August 25, 2015). It is uncertain the extent to which this proposed amendment would impact the measured energy use of EPSs that are currently certified. If adopted, testing to this provision would not be required until such time as compliance is required with amended energy conservation standards, should such standards be adopted.

DOE requests comment on its proposed amendments for EPSs that are not supplied with output cords; and specifically, DOE requests comment on whether the test procedure should specify testing with a DC output cord recommended for use by manufacturers, or whether DOE should specify electrical specifications (*i.e.,* cord length, gauge, material) for the type of cord. For example, DOE could prescribe a table, as shown below, that contains electrical specifications of DC output cords for various ranges of nameplate output currents at the 100% loading condition.

[8] LENCENT USB Wall Charger Plug, 2Pack 17W 3-Port USB Plug CubePortable Charger sold on *newegg.com; www.regulations.gov/document/EERE-2019-BT-TP-0012-0015.*

[9] ORICO DCAP–5U 5-Port USB Wall Charger adapter sold on *newegg.com; www.regulations.gov/document/EERE-2019-BT-TP-0012-0014.*

[10] Sony Camera Charger UB10 USB to AC Power Adapter sold on *newegg.com, www.regulations.gov/document/EERE-2019-BT-TP-0012-0016.*

TABLE III–I—EXAMPLE OUTPUT CORD ELECTRICAL SPECIFICATIONS

DC output current at 100% loading condition (amps)	Cord length (feet)	Conductor	American wire gauge
0 < I ≤ 1	3	Copper	26
1 < I ≤ 2	3	Copper	24
2 < I ≤ 3	3	Copper	22
3 < I ≤ 4	3	Copper	20
4 < I ≤ 5	3	Copper	18
I > 5	3	Copper	16

These example electrical specifications are based on common electrical specifications of output cords that DOE has observed in the market.

If DOE were to prescribe electrical specifications for output cords, DOE seeks input from industry on what those electrical specifications should be, and/or whether there exists an industry standard that contains specifications for electrical cables, which DOE could incorporate by reference.

D. USB–PD EPSs With Additional Optional Voltages and Currents and Programmable Power Supplies

In the December 2019 NOPR, DOE proposed to adopt a test procedure for USB–PD EPSs (also called adaptive EPSs) that was prescribed in several granted test procedure waivers (*i.e.,* case Nos. EPS–001, EPS–002, EPS–003, EPS–004, 2017–014, 2018–005, and 2018–010 [11]). 84 FR 67106, 67111—67113 (December 6, 2019). An adaptive EPS is one with an output bus [12] that can alter its output voltage based on an established digital communication protocol with the end-use application without any user-generated action. As described in the December 2019 NOPR, in granting the test procedure waivers for certain basic models of adaptive EPSs, DOE determined that, while such EPSs are very much in scope of the existing test procedure, continuing to apply the current set of instructions in appendix Y to them would yield results that would be unrepresentative of the active-mode efficiency of those products. 84 FR 67106, 67112 (December 6, 2019). In granting the test procedure waivers, DOE concluded that when using a USB–PD EPS to charge an end-use product at the lowest voltage level of 5 volts, the product would rarely draw more than 2 amps of current (*i.e.,* a power draw of more than 10W). *See* 83 FR 11738, 11739 (December 6, 2019). Nonetheless, for a USB–PD EPS with a nameplate output current of 3 amps, the current DOE test procedure requires that the EPS's efficiency be measured at a current of 3 amps at the lowest voltage condition of 5 volts (*i.e.,* a power draw of 15W). As a result, the efficiency of that EPS, when evaluated at that higher power draw (15W v. *10W), would result in a measurement that is unrepresentative of the actual energy consumption characteristics of the USB–PD EPS being tested. See Id.*

USB–PD EPSs covered by the referenced waivers must be tested such that when testing at the lowest achievable output voltage (*i.e.,* 5 volts), the output current shall be 2 amps (corresponding to an output power of 10W) at the 100% loading condition. The 75%, 50%, and 25% loading conditions are scaled accordingly under this alternate procedure (*i.e.,* 1.5 amps, 1 amp, and 0.5 amps, respectively). When tested in this manner, the resulting power draws are 10W, 7.5W, 5W, and 2.5W; this result is in contrast to the existing test procedure at appendix Z, which requires power draws of 15W, 11.25W, 7.5W, and 3.75W at the 100%, 75%, 50%, and 25% loading conditions, respectively. *See* 83 FR 11738, 11739–11740 (March 16, 2018). As a result, in the December 2019 NOPR, DOE proposed to amend appendix Z to adopt the alternate test procedure applicable to the adaptive EPSs covered by the test procedure waivers. 84 FR 67106, 67113 (December 6, 2019).

In response to the proposed definition of USB–PD EPS, ITI stated that the limitation in current and voltage (via the phrase ''the voltages and currents must not exceed'') should be removed to avoid excluding USB–PD EPSs with additional optional additional voltages and currents.[13] (ITI, No. 13 at p. 3) According to ITI, the additional optional voltages and currents ensure that temperatures can be optimized inside laptop computers. (*Id.*) Moreover, ITI commented that the proposed definition of a USB–PD EPS does not include PPSs, which is defined in IEC 62680–1–2. (*Id.*) ITI stated that PPSs are able to output a minimum voltage of 3.3 volts, in contrast to the minimum voltage of 5 volts as specified in the proposed definition of a USB–PD EPS, such that equating the 2A loading condition with 10W (*i.e.,* 2 amps at 5 volts) creates a conflict when used with a PPS. (*Id.*) Accordingly, ITI recommended that DOE replace reference to ''10W'' with reference to ''2A at the lowest nameplate output voltage.'' (*Id.*)

The alternate test procedure prescribed in the waivers references IEC 62680–1–2:2017 and specified the voltage and current requirements contained therein. *See* 84 FR 59365 (November 4, 2019); 83 FR 60830 (November 27, 2018); 83 FR 50905 (October 10, 2018); 83 FR 25448 (June 1, 2018); and 83 FR 11738 (March 16, 2018). The definition for USB–PD EPSs proposed in the December 2019 NOPR used the specific voltage and current requirements from IEC 62680–1–2:2017 as referenced in the waiver petitions (*i.e.,* requiring USB–PD EPSs to be rated at 3 amps at an output voltage of 5 volts, and: at no more than 3 amps at 9 volts; at 3 amps at 15 volts, and; at 5 amps at 20 volts) and required that only USB–PD EPSs meeting the proposed definition would be subject to the proposed test procedure. 84 FR 67106, 67113 (December 6, 2019). PPSs were not specified in IEC 62680–1–2 until a revised version, IEC 62680–1–2:2018, published on April 12, 2018.

DOE expects USB–PD EPSs with optional voltages and currents and PPSs to become more common in the market in the future as more end-use applications incorporate USB–PD for charging purposes. Moreover, because PPSs employ the same communication technology as USB–PD EPSs, DOE

[11] *See also* Case No. 2019–005.

[12] An ''output bus'' is defined as ''any of the outputs of the power supply to which loads can be connected and from which power can be drawn, as opposed to signal connections used for communication.'' Section 2 of appendix Z.

[13] The IEC 62680–1–2 specification describes the architecture, protocols, power supply behavior, connectors, and cabling necessary for managing power delivery over a USB. In addition to those voltage and current requirements specified in the previously proposed definition of a USB–PD EPS, stakeholders commented that IEC 62680–1–2 also specifies additional optional voltage and current limits for USB–PD EPSs that should be included.

expects PPSs to rarely draw more than 2 amps of current at a lowest nameplate output 3.3 volts, similar to USB–PD EPSs with a lowest nameplate output voltage of 5 volts. Similarly, DOE expects USB–PD EPSs with additional optional voltages and currents, which can also have a lowest nameplate output voltage as low as 3.3 volts, to also rarely draw more than 2 amps of current at that output voltage.

In this SNOPR, DOE proposes to modify the proposed definition of a USB–PD EPS in order to include USB–PD EPSs with additional optional voltages and currents and PPSs, consistent with the updated industry standard. By modifying the definition of USB–PD EPS such that it would include PPS and USB–PD EPSs with additional optional voltages and currents, such products would be tested according to the alternate test procedure prescribed for USB–PD EPSs in the December 2019 NOPR.

In summary, DOE proposes to define USB–PD EPS as an adaptive EPS that utilizes a USB Type-C output port and uses a digital protocol to communicate between the EPS and the end-user product to automatically switch between any output voltage within the range of 3.3 volts to 20 volts. The USB–PD output bus must be capable of delivering 3 amps at the lowest output voltage, and the currents must not exceed any of the following values for the supported voltages: 3 amps at 9 volts; 3 amps at 15 volts; and 5 amps at 20 volts.

DOE also proposes to revise the definition of nameplate output power in order to provide for testing of PPSs and USB–PD EPSs with additional optional voltages and currents at 2 amps at the lowest nameplate output voltage, instead of at 5 volts, as was previously specified in the definition of nameplate output power. DOE proposes to revise the definition of nameplate output power to mean the power output of the power supply as specified on the manufacturer's label on the power supply housing or, if absent from the housing, as specified in documentation provided by the manufacturer. For an adaptive external power supply with USB–PD ports, the nameplate output power is the product of its lowest nameplate output voltage and 2 amps for each USB–PD port and as specified on the manufacturer's label or documentation at the highest voltage.

The proposed definition would result in PPSs and USB–PD EPSs with additional optional voltages and currents being tested according to the same alternate test procedure provided for USB–PD EPSs in the December 2019 NOPR.

DOE is not aware of any PPSs or USB–PD EPSs with additional optional voltages and currents on the market certified as EPSs, and thus DOE does not expect the proposed amendments to require the retesting or recertification of any basic EPS models.

DOE requests comments on the proposed amendments related to PPSs and USB–PD EPSs with optional voltages and currents.

E. Test Procedure Costs and Impact

In this SNOPR, DOE is proposing to clarify the scope of the EPS test procedure at appendix Z by removing references to direct operation and indirect operation Class A EPSs and providing additional detail regarding the subject EPSs. DOE is also proposing to (1) maintain the placement of certain definitions at 10 CFR 430.2 that DOE initially proposed to move to appendix Z in the NOPR, (2) provide additional specification for the testing of EPSs that do not ship with an output cord, and (3) align the testing requirements for PPS with those for USB–PD EPSs.

DOE has tentatively determined that the proposed amendments would not be unduly burdensome for manufacturers to conduct. Further details regarding the cost impact of the proposed amendments are presented in the following paragraphs.

1. Scope of Applicability

In this SNOPR, DOE proposes to amend the EPS test procedure in appendix Z to provide additional clarity as to those EPSs subject to the test procedure. The proposal would remove reference in the scope section to direct operation EPSs and indirect operation Class A EPSs, as reference to these terms is duplicative with the instruction that the scope of the test procedure are those EPSs subject to standards. DOE also proposes to provide additional detail as to the products subject to the test procedure by noting that devices for which the primary load of the converted voltage within the device is not delivered to a separate end use product are not covered. DOE has tentatively determined that neither of these amendments would change the scope of the EPS test procedure. As such, the proposed amendments to the scoping language would not change (1) the scope of the products subject to the test procedure, (2) the cost to conduct the test procedure, or (3) the cost incurred by manufacturers to re-test any currently covered EPSs. Accordingly, these proposed amendments would not impact the test burden for any EPS manufacturer.

DOE requests comment on its initial determination that the proposed amendments regarding the scope of appendix Z, if finalized, would not cause any EPS manufacturers to incur any additional costs.

2. Testing EPSs That Are Not Supplied With an Output Cord

DOE proposes to specify that those EPSs that are not supplied with an output cord would be tested using an output cord recommended by the manufacturer. The current test procedure does not provide explicit instructions on how to test EPSs that are not supplied with an output cord. This proposed amendment would explicitly require EPS manufacturers to conduct the test at the end of an output cord that is connected to the output electrical contact. The addition of an output cord would introduce electrical losses in the test setup and would thus impact the efficiency measurement of an EPS. DOE acknowledges that the proposals related to the testing of EPSs that are not supplied with an output cord could impact the measured energy use of certain basic models—specifically, those models that were tested without an output cord or with an output cord different from what would be required by the proposed amendment. However, this proposal, if adopted, would not be required until such time as DOE were to amend the energy conservation standards for EPSs. Moreover, were this proposal adopted, it would not result in an increase in test burden as compared to the current test procedure, as it would not require any additional testing steps.

DOE requests comment on its initial determination that the proposed amendment to test EPSs shipped without an output cord with a manufacturer recommended cord, if finalized, would not increase the test burden as compared to the current test procedure once required.

3. USB–PD With Additional Optional Voltages and Currents and Programmable Power Supplies

DOE proposes to amend the definition of a USB–PD EPS, as proposed in the December 2019 NOPR, in order to include USB–PD EPSs with additional optional voltages and currents and PPSs. DOE is not aware of any USB–PD EPSs with additional optional voltages and currents or PPSs that are currently certified in DOE's Compliance Certification Database (''CCD''). Further, DOE has not received any waiver petitions under 10 CFR 430.27 for USB–

PD EPSs with additional optional voltages and currents or PPSs. Accordingly, based on currently available data, DOE has preliminarily concluded that the proposed amendments would not alter the measured energy efficiency of any EPS basic models currently certified in DOE's CCD. Hence, manufacturers would not incur any additional costs compared to the existing test procedure.

DOE has preliminarily concluded that the proposed amendments, if finalized, would not impact the scope of the test procedure (*i.e.,* the proposal would not require manufacturers to test EPSs that are not already required to be tested) and would not alter the measured energy efficiency of EPSs under either the current test procedure or the alternate test procedure required under currently active test procedure waivers. For adaptive EPSs that meet the IEC 62680–1–2 specification (including PPSs and USB–PD EPSs with optional voltages and currents), the proposed approach is the same one required under the granted waivers. *See* 83 FR 11738 (March 16, 2018) (initial Decision & Order on joint waiver request from Apple, et al.), 83 FR 25448 (June 1, 2018) (Decision & Order on waiver request Huawei), 83 FR 50905 (October 10, 2018) (first waiver extension for Apple), and 83 FR 60830 (November 27, 2018) (second waiver extension for Apple). Moreover, DOE is not aware of any PPSs or USB–PD EPSs with additional optional voltages and currents on the market certified as EPSs, and thus DOE does not expect the proposed amendments to require the retesting or recertification of any basic EPS models. Accordingly, based on currently available data, DOE has preliminarily concluded that the proposed amendments would not alter the measured energy efficiency for such adaptive EPSs. Manufacturers would be able to continue to rely on data generated under the current test procedure, including any alternate test procedure permitted by DOE under a manufacturer-specific decision and order, should any of the proposed amendments be finalized.

DOE requests comment on its initial determination that its proposed amendment for USB–PD EPSs, if finalized, would not cause any EPS manufacturers to incur any additional costs.

F. Compliance Date and Waivers

EPCA prescribes that all representations of energy efficiency and energy use, including those made on marketing materials and product labels, must be made in accordance with an amended test procedure beginning 180 days after publication of such a test procedure final rule in the **Federal Register**. (42 U.S.C. 6293(c)(2)) The 180 day mandate applies to all test procedure changes in this proposed rule with the exception of proposed amendments related to testing EPSs that are not supplied with an output cord. Those requirements, if finalized, would not be required until such time as DOE were to amend the energy conservation standards for EPSs. As discussed previously in this document, appendix Z does not explicitly provide instructions for testing EPSs that are supplied without an output cord. Currently, a manufacturer may choose to test with a recommended output cord. Under the proposed test procedure, a manufacturer would be required to test with a recommended output cord only at such time as compliance is required with amended energy conservation standards, should such standards be amended.

If DOE were to publish an amended test procedure, EPCA provides an allowance for individual manufacturers to petition DOE for an extension of the 180-day period if the manufacturer would experience undue hardship in meeting the deadline. (42 U.S.C. 6293(c)(3)) To receive such an extension, petitions must be filed with DOE no later than 60 days before the end of the 180-day period and must detail how the manufacturer will experience undue hardship. (*Id.*)

Should DOE amend the test procedure to address the issues presented in a waiver, the waiver would automatically terminate on the date on which use of that test procedure is required to demonstrate compliance. 10 CFR 430.27(h)(3). Recipients of any such waivers would be required to test those products that were subject to the waiver according to the amended test procedure as of the effective date of the amended test procedure. 10 CFR 430.27(i)(2). As part of this SNOPR, DOE continues to propose to adopt the alternate test procedure required under the waivers granted to Apple, Microsoft, Poin2, Bitland, and Huawei for testing USB–PD EPSs (Case Nos. EPS–001, EPS–002, EPS–003, and EPS–004), with the modifications discussed above to address PPSs. If the proposed amendments regarding the testing of adaptive EPSs were made final, the waivers issued to Apple, Microsoft, Poin2, Bitland, and Huawei would expire on the date on which testing were required using the amended test procedure. At such time Apple, Microsoft, Poin2, Bitland, and Huawei would be required to test the EPSs subject to the waivers according to the amended Federal test procedure.

IV. Procedural Issues and Regulatory Review

A. Review Under Executive Order 12866

The Office of Management and Budget (''OMB'') has determined that this test procedure rulemaking does not constitute a ''significant regulatory action'' under section 3(f) of Executive Order 12866, Regulatory Planning and Review, 58 FR 51735 (October 4, 1993). Accordingly, this action was not subject to review under the Executive order by the Office of Information and Regulatory Affairs (''OIRA'') in OMB.

B. Review Under the Regulatory Flexibility Act

The Regulatory Flexibility Act (5 U.S.C. 601 *et seq.*) requires preparation of an initial regulatory flexibility analysis (''IRFA'') for any rule that by law must be proposed for public comment, unless the agency certifies that the rule, if promulgated, will not have a significant economic impact on a substantial number of small entities. A regulatory flexibility analysis examines the impact of the rule on small entities and considers alternative ways of reducing negative effects. As required by Executive Order 13272, ''Proper Consideration of Small Entities in Agency Rulemaking,'' 67 FR 53461 (August 16, 2002), DOE published procedures and policies on February 19, 2003 to ensure that the potential impacts of its rules on small entities are properly considered during the DOE rulemaking process. 68 FR 7990. DOE has made its procedures and policies available on the Office of the General Counsel's website: *www.energy.gov/gc/office-general-counsel.*

DOE reviewed this test procedure SNOPR pursuant to the Regulatory Flexibility Act and the procedures and policies previously discussed. DOE has concluded that this rule would not have a significant impact on a substantial number of small entities. The factual basis for this certification is set forth below. DOE will consider any comments on the certification in determining whether to adopt the proposed amendments to the test procedure contained in this document.

For manufacturers of EPSs, the Small Business Administration (''SBA'') has set a size threshold, which defines those entities classified as ''small businesses'' for the purposes of the statute. DOE used the SBA's small business size standards to determine whether any small entities would be subject to the requirements of the rule. 13 CFR part

121. The size standards are listed by North American Industry Classification System (''NAICS'') code and industry description and are available at *www.sba.gov/document/support--table-size-standards.* EPS manufacturing is classified under NAICS 335999, ''All Other Miscellaneous Electrical Equipment and Component Manufacturing.'' The SBA sets a threshold of 500 employees or less for an entity to be considered as a small business in this category.

As previously discussed in section III.E, DOE does not anticipate that any EPS manufacturer, large or small, would incur any additional testing costs as a result of these proposed test procedure amendments, if finalized.

Therefore, DOE concludes that the impacts of the proposed test procedure amendments proposed in this SNOPR would not have a ''significant economic impact on a substantial number of small entities,'' and that the preparation of an IRFA is not warranted. DOE will transmit the certification and supporting statement of factual basis to the Chief Counsel for Advocacy of the Small Business Administration for review under 5 U.S.C. 605(b).

DOE requests comment on its initial determination that no small businesses would incur any additional cost due to the proposed test procedure amendments, if finalized, until compliance with a future energy conservation is required.

C. Review Under the Paperwork Reduction Act of 1995

Manufacturers of EPSs must certify to DOE that their products comply with any applicable energy conservation standards. To certify compliance, manufacturers must first obtain test data for their products according to the DOE test procedures, including any amendments adopted for those test procedures. DOE has established regulations for the certification and recordkeeping requirements for all covered consumer products and commercial equipment, including EPSs. (10 CFR part 429, subpart B.) The collection-of-information requirement for the certification and recordkeeping is subject to review and approval by OMB under the Paperwork Reduction Act (''PRA''). This requirement has been approved by OMB under OMB control number 1910–1400. Public reporting burden for the certification is estimated to average 35 hours per response, including the time for reviewing instructions, searching existing data sources, gathering and maintaining the data needed, and completing and reviewing the collection of information.

The proposals presented in this SNOPR, if adopted, would not require the recertification of any basic model currently certified on the CCD nor would they require the reporting of information not currently required.

Notwithstanding any other provision of the law, no person is required to respond to, nor shall any person be subject to a penalty for failure to comply with, a collection of information subject to the requirements of the PRA, unless that collection of information displays a currently valid OMB Control Number.

D. Review Under the National Environmental Policy Act of 1969

In this proposed rule, DOE proposes test procedure amendments that it expects will be used to develop and implement future energy conservation standards for external power supplies. DOE has determined that this proposed rule falls into a class of actions that are categorically excluded from review under the National Environmental Policy Act of 1969 (42 U.S.C. 4321 *et seq.*) and DOE's implementing regulations at 10 CFR part 1021. Specifically, DOE has determined that adopting test procedures for measuring energy efficiency of consumer products and industrial equipment is consistent with activities identified in 10 CFR part 1021, appendix A to subpart D, A5 and A6. Accordingly, neither an environmental assessment nor an environmental impact statement is required.

E. Review Under Executive Order 13132

Executive Order 13132, ''Federalism,'' 64 FR 43255 (August 10, 1999), imposes certain requirements on agencies formulating and implementing policies or regulations that preempt State law or that have federalism implications. The Executive order requires agencies to examine the constitutional and statutory authority supporting any action that would limit the policymaking discretion of the States and to carefully assess the necessity for such actions. The Executive order also requires agencies to have an accountable process to ensure meaningful and timely input by State and local officials in the development of regulatory policies that have federalism implications. On March 14, 2000, DOE published a statement of policy describing the intergovernmental consultation process it will follow in the development of such regulations. 65 FR 13735. DOE has examined this proposed rule and has determined that it would not have a substantial direct effect on the States, on the relationship between the national government and the States, or on the distribution of power and responsibilities among the various levels of government. EPCA governs and prescribes Federal preemption of State regulations as to energy conservation for the products that are the subject of this proposed rule. States can petition DOE for exemption from such preemption to the extent, and based on criteria, set forth in EPCA. (42 U.S.C. 6297(d)) No further action is required by Executive Order 13132.

F. Review Under Executive Order 12988

Regarding the review of existing regulations and the promulgation of new regulations, section 3(a) of Executive Order 12988, ''Civil Justice Reform,'' 61 FR 4729 (February 7, 1996), imposes on Federal agencies the general duty to adhere to the following requirements: (1) Eliminate drafting errors and ambiguity; (2) write regulations to minimize litigation; (3) provide a clear legal standard for affected conduct rather than a general standard; and (4) promote simplification and burden reduction. Section 3(b) of Executive Order 12988 specifically requires that executive agencies make every reasonable effort to ensure that the regulation: (1) Clearly specifies the preemptive effect, if any; (2) clearly specifies any effect on existing Federal law or regulation; (3) provides a clear legal standard for affected conduct while promoting simplification and burden reduction; (4) specifies the retroactive effect, if any; (5) adequately defines key terms; and (6) addresses other important issues affecting clarity and general draftsmanship under any guidelines issued by the Attorney General. Section 3(c) of Executive Order 12988 requires Executive agencies to review regulations in light of applicable standards in sections 3(a) and 3(b) to determine whether they are met or it is unreasonable to meet one or more of them. DOE has completed the required review and determined that, to the extent permitted by law, the proposed rule meets the relevant standards of Executive Order 12988.

G. Review Under the Unfunded Mandates Reform Act of 1995

Title II of the Unfunded Mandates Reform Act of 1995 (''UMRA'') requires each Federal agency to assess the effects of Federal regulatory actions on State, local, and Tribal governments and the private sector. Public Law 104–4, sec. 201 (codified at 2 U.S.C. 1531). For a proposed regulatory action likely to result in a rule that may cause the expenditure by State, local, and Tribal governments, in the aggregate, or by the private sector of $100 million or more in any one year (adjusted annually for

inflation), section 202 of UMRA requires a Federal agency to publish a written statement that estimates the resulting costs, benefits, and other effects on the national economy. (2 U.S.C. 1532(a), (b)) The UMRA also requires a Federal agency to develop an effective process to permit timely input by elected officers of State, local, and Tribal governments on a proposed ''significant intergovernmental mandate,'' and requires an agency plan for giving notice and opportunity for timely input to potentially affected small governments before establishing any requirements that might significantly or uniquely affect small governments. On March 18, 1997, DOE published a statement of policy on its process for intergovernmental consultation under UMRA. 62 FR 12820; also available at *www.energy.gov/gc/office-general-counsel.* DOE examined this proposed rule according to UMRA and its statement of policy and determined that the rule contains neither an intergovernmental mandate, nor a mandate that may result in the expenditure of $100 million or more in any year, so these requirements do not apply.

H. Review Under the Treasury and General Government Appropriations Act, 1999

Section 654 of the Treasury and General Government Appropriations Act, 1999 (Pub. L. 105–277) requires Federal agencies to issue a Family Policymaking Assessment for any rule that may affect family well-being. This proposed rule would not have any impact on the autonomy or integrity of the family as an institution. Accordingly, DOE has concluded that it is not necessary to prepare a Family Policymaking Assessment.

I. Review Under Executive Order 12630

DOE has determined, under Executive Order 12630, ''Governmental Actions and Interference with Constitutionally Protected Property Rights'' 53 FR 8859 (March 18, 1988), that this proposed regulation would not result in any takings that might require compensation under the Fifth Amendment to the U.S. Constitution.

J. Review Under Treasury and General Government Appropriations Act, 2001

Section 515 of the Treasury and General Government Appropriations Act, 2001 (44 U.S.C. 3516 note) provides for agencies to review most disseminations of information to the public under guidelines established by each agency pursuant to general guidelines issued by OMB. OMB's guidelines were published at 67 FR 8452 (February 22, 2002), and DOE's guidelines were published at 67 FR 62446 (October 7, 2002). DOE has reviewed this proposed rule under the OMB and DOE guidelines and has concluded that it is consistent with applicable policies in those guidelines.

K. Review Under Executive Order 13211

Executive Order 13211, ''Actions Concerning Regulations That Significantly Affect Energy Supply, Distribution, or Use,'' 66 FR 28355 (May 22, 2001), requires Federal agencies to prepare and submit to OMB, a Statement of Energy Effects for any proposed significant energy action. A ''significant energy action'' is defined as any action by an agency that promulgated or is expected to lead to promulgation of a final rule, and that: (1) Is a significant regulatory action under Executive Order 12866, or any successor order; and (2) is likely to have a significant adverse effect on the supply, distribution, or use of energy; or (3) is designated by the Administrator of OIRA as a significant energy action. For any proposed significant energy action, the agency must give a detailed statement of any adverse effects on energy supply, distribution, or use should the proposal be implemented, and of reasonable alternatives to the action and their expected benefits on energy supply, distribution, and use.

The proposed regulatory action to amend the test procedure for measuring the energy efficiency of EPSs is not a significant regulatory action under Executive Order 12866. Moreover, it would not have a significant adverse effect on the supply, distribution, or use of energy, nor has it been designated as a significant energy action by the Administrator of OIRA. Therefore, it is not a significant energy action, and, accordingly, DOE has not prepared a Statement of Energy Effects.

L. Review Under Section 32 of the Federal Energy Administration Act of 1974

Under section 301 of the Department of Energy Organization Act (Pub. L. 95–91; 42 U.S.C. 7101), DOE must comply with section 32 of the Federal Energy Administration Act of 1974, as amended by the Federal Energy Administration Authorization Act of 1977. (15 U.S.C. 788; ''FEAA'') Section 32 essentially provides in relevant part that, where a proposed rule authorizes or requires use of commercial standards, the notice of proposed rulemaking must inform the public of the use and background of such standards. In addition, section 32(c) requires DOE to consult with the Attorney General and the Chairman of the Federal Trade Commission (''FTC'') concerning the impact of the commercial or industry standards on competition.

The proposed modifications to the test procedure for EPSs do not incorporate any new industry standards.

M. Description of Materials Incorporated by Reference

In this SNOPR, DOE proposes to maintain the current incorporation by reference of IEC 62301 Ed. 2.0, and create a new section 1 in appendix Z, titled ''incorporation by reference'', to enumerate the specific provisions of the standard that are applicable to the EPS test procedure in appendix Z. Specifically, section 1 of appendix Z would limit use of the material incorporated by reference to the following sections of the IEC 62301:

IEC 62301, ''Household electrical appliances—Measurement of standby power,'' Edition 2.0, 2011–01:

- Section 4.4.1, ''Power measurement uncertainty'';
- Section 5.3.3, ''Average reading method'';
- Annex B, ''Notes on the measurement of low power modes''; and
- Annex D, ''Determination of uncertainty of measurement''.

IEC 62301 is an industry-accepted standard for measuring the standby power of household electrical appliances. This standard is reasonably available and can be obtained from the American National Standards Institute at the following address:

American National Standards Institute, 25 W 43rd Street, 4th Floor, New York, NY 10036, (212) 642–4936, or by visiting *https://webstore.ansi.org.*

V. Public Participation

A. Participation in the Webinar

The time and date of the webinar meeting are listed in the **DATES** section at the beginning of this document. Webinar registration information, participant instructions, and information about the capabilities available to webinar participants will be published on DOE's website: *https://www1.eere.energy.gov/buildings/appliance_standards/standards.aspx?productid=1.* Participants are responsible for ensuring their systems are compatible with the webinar software.

B. Procedure for Submitting Prepared General Statements for Distribution

Any person who has an interest in the topics addressed in this SNOPR, or who is representative of a group or class of

persons that has an interest in these issues, may request an opportunity to make an oral presentation at the webinar. Requests should be sent by email to: *ApplianceStandardsQuestions@ee.doe.gov.* Persons who wish to speak should include with their request a computer file in WordPerfect, Microsoft Word, PDF, or text (ASCII) file format that briefly describes the nature of their interest in this rulemaking and the topics they wish to discuss. Such persons should also provide a daytime telephone number where they can be reached.

Persons requesting to speak should briefly describe the nature of their interest in this rulemaking and provide a telephone number for contact. DOE requests persons selected to make an oral presentation to submit an advance copy of their statements at least two weeks before the webinar. At its discretion, DOE may permit persons who cannot supply an advance copy of their statement to participate, if those persons have made advance alternative arrangements with the Building Technologies Office. As necessary, requests to give an oral presentation should ask for such alternative arrangements.

C. Conduct of the Webinar

DOE will designate a DOE official to preside at the webinar and may also use a professional facilitator to aid discussion. The meeting will not be a judicial or evidentiary-type public hearing, but DOE will conduct it in accordance with section 336 of EPCA (42 U.S.C. 6306). A court reporter will be present to record the proceedings and prepare a transcript. DOE reserves the right to schedule the order of presentations and to establish the procedures governing the conduct of the webinar. There shall not be discussion of proprietary information, costs or prices, market share, or other commercial matters regulated by U.S. anti-trust laws. After the webinar and until the end of the comment period, interested parties may submit further comments on the proceedings and any aspect of the rulemaking.

The webinar will be conducted in an informal, conference style. DOE will present summaries of comments received before the webinar, allow time for prepared general statements by participants, and encourage all interested parties to share their views on issues affecting this rulemaking. Each participant will be allowed to make a general statement (within time limits determined by DOE), before the discussion of specific topics. DOE will permit, as time permits, other participants to comment briefly on any general statements.

At the end of all prepared statements on a topic, DOE will permit participants to clarify their statements briefly. Participants should be prepared to answer questions by DOE and by other participants concerning these issues. DOE representatives may also ask questions of participants concerning other matters relevant to this rulemaking. The official conducting the webinar will accept additional comments or questions from those attending, as time permits. The presiding official will announce any further procedural rules or modification of the above procedures that may be needed for the proper conduct of the webinar.

A transcript of the webinar will be included in the docket, which can be viewed as described in the Docket section at the beginning of this SNOPR. In addition, any person may buy a copy of the transcript from the transcribing reporter.

D. Submission of Comments

DOE will accept comments, data and information regarding this proposed rule no later than the date provided in the **DATES** section at the beginning of this proposed rule. Interested parties may submit comments using any of the methods described in the **ADDRESSES** section at the beginning of this document.

Submitting comments via www.regulations.gov. The *www.regulations.gov* web page will require you to provide your name and contact information. Your contact information will be viewable to DOE Building Technologies staff only. Your contact information will not be publicly viewable except for your first and last names, organization name (if any), and submitter representative name (if any). If your comment is not processed properly because of technical difficulties, DOE will use this information to contact you. If DOE cannot read your comment due to technical difficulties and cannot contact you for clarification, DOE may not be able to consider your comment.

However, your contact information will be publicly viewable if you include it in the comment or in any documents attached to your comment. Any information that you do not want to be publicly viewable should not be included in your comment, nor in any document attached to your comment. Persons viewing comments will see only first and last names, organization names, correspondence containing comments, and any documents submitted with the comments.

Do not submit to *www.regulations.gov* information for which disclosure is restricted by statute, such as trade secrets and commercial or financial information (hereinafter referred to as Confidential Business Information (''CBI'')). Comments submitted through *www.regulations.gov* cannot be claimed as CBI. Comments received through the website will waive any CBI claims for the information submitted. For information on submitting CBI, see the Confidential Business Information section.

DOE processes submissions made through *www.regulations.gov* before posting. Normally, comments will be posted within a few days of being submitted. However, if large volumes of comments are being processed simultaneously, your comment may not be viewable for up to several weeks. Please keep the comment tracking number that *www.regulations.gov* provides after you have successfully uploaded your comment.

Submitting comments via email. Comments and documents submitted via email also will be posted to *www.regulations.gov.* If you do not want your personal contact information to be publicly viewable, do not include it in your comment or any accompanying documents. Instead, provide your contact information on a cover letter. Include your first and last names, email address, telephone number, and optional mailing address. The cover letter will not be publicly viewable as long as it does not include any comments.

Include contact information each time you submit comments, data, documents, and other information to DOE. No facsimiles (faxes) will be accepted.

Comments, data, and other information submitted to DOE electronically should be provided in PDF (preferred), Microsoft Word or Excel, WordPerfect, or text (ASCII) file format. Provide documents that are not secured, written in English and free of any defects or viruses. Documents should not contain special characters or any form of encryption and, if possible, they should carry the electronic signature of the author.

Campaign form letters. Please submit campaign form letters by the originating organization in batches of between 50 to 500 form letters per PDF or as one form letter with a list of supporters' names compiled into one or more PDFs. This reduces comment processing and posting time.

Confidential Business Information. According to 10 CFR 1004.11, any

person submitting information that he or she believes to be confidential and exempt by law from public disclosure should submit via email two well-marked copies: One copy of the document marked confidential including all the information believed to be confidential, and one copy of the document marked non-confidential with the information believed to be confidential deleted. DOE will make its own determination about the confidential status of the information and treat it according to its determination.

It is DOE's policy that all comments may be included in the public docket, without change and as received, including any personal information provided in the comments (except information deemed to be exempt from public disclosure).

E. Issues on Which DOE Seeks Comment

Although DOE welcomes comments on any aspect of this proposal, DOE is particularly interested in receiving comments and views of interested parties concerning the following issues:

(1) *DOE requests feedback on its proposal to revise section 1 of appendix Z to remove references to direct operation EPSs and indirect operation Class A EPSs. DOE also requests feedback on its proposal to use the proposed definition of a ''commercial and industrial power supply'' to exclude such EPSs from the scope of the EPS test procedure.*

(2) DOE requests comment on the proposed clarification in appendix Z to exclude explicitly those devices for which the primary load of the converted voltage within the device is not delivered to a separate end use product. Specifically, whether it adequately clarifies which devices are subject to the test procedure, and, if not, how the test procedure could be further modified to provide further clarity regarding its scope.

(3) DOE requests feedback on maintaining the definitions of ''Class A external power supply'', ''basic-voltage external power supply'', ''direct operation external power supply'', ''indirect operation external power supply'', and ''low-voltage external power supply'' in their current location at 10 CFR 430.2. DOE also requests comment on the proposed relocation of the definition of ''adaptive external power supply'' to appendix Z.

(4) DOE requests comment on its proposed amendments for EPSs that are not supplied with output cords; and, specifically, DOE requests comment on whether the test procedure should specify testing with a DC output cord recommended for use by manufacturers, or whether DOE should specify electrical specifications (*i.e.,* cord length, gauge, material) for the type of cord. For example, DOE could prescribe a table, as shown below, that contains electrical specifications of DC output cords for various ranges of nameplate output currents at the 100% loading condition.

(5) DOE requests comments on the proposed amendments related to PPSs and USB–PD EPSs with optional voltages and currents.

(6) DOE requests comment on its initial determination that the proposed amendments regarding the scope of appendix Z, if finalized, would not cause any EPS manufacturers to incur any additional costs.

(7) DOE requests comment on its initial determination that the proposed amendment to test EPSs shipped without an output cord with a manufacturer recommended cord, if finalized, would not increase the test burden as compared to the current test procedure once required.

(8) DOE requests comment on its initial determination that its proposed amendment for USB–PD EPSs, if finalized, would not cause any EPS manufacturers to incur any additional costs.

(9) DOE requests comment on its initial determination that no small businesses would incur any additional cost due to the proposed test procedure amendments, if finalized, until compliance with a future energy conservation is required.

VI. Approval of the Office of the Secretary

The Secretary of Energy has approved publication of this supplemental notice of proposed rulemaking.

List of Subjects in 10 CFR Part 430

Administrative practice and procedure, Confidential business information, Energy conservation, Household appliances, Imports, Incorporation by reference, Intergovernmental relations, Small businesses.

Signing Authority

This document of the Department of Energy was signed on October 19, 2021, by Kelly Speakes-Backman, Principal Deputy Assistant Secretary and Acting Assistant Secretary for Energy Efficiency and Renewable Energy, pursuant to delegated authority from the Secretary of Energy. That document with the original signature and date is maintained by DOE. For administrative purposes only, and in compliance with requirements of the Office of the Federal Register, the undersigned DOE **Federal Register** Liaison Officer has been authorized to sign and submit the document in electronic format for publication, as an official document of the Department of Energy. This administrative process in no way alters the legal effect of this document upon publication in the **Federal Register**.

Signed in Washington, DC, on October 20, 2021.

Treena V. Garrett,

Federal Register Liaison Officer, U.S. Department of Energy.

For the reasons stated in the preamble, DOE is proposing to amend part 430 of Chapter II of Title 10, Code of Federal Regulations as set forth below:

PART 430—ENERGY CONSERVATION PROGRAM FOR CONSUMER PRODUCTS

■ 1. The authority citation for part 430 continues to read as follows:

Authority: 42 U.S.C. 6291–6309; 28 U.S.C. 2461 note.

■ 2. Section 430.2 is amended by:

■ a. Removing the definition of ''Adaptive external power supply (EPS)'';

■ b. Adding a definition of ''Commercial and industrial power supply'' in alphabetical order; and

■ c. Revising the definition of ''External power supply''.

The addition and revision read as follows:

§ 430.2 Definitions.

* * * * *

Commercial and industrial power supply means a power supply that is used to convert electric current into DC or lower-voltage AC current, is not distributed in commerce for use with a consumer product, and includes any of the following characteristics:

(1) A power supply that require a 3-phase input power and that is incapable of operating on household current;

(2) A DC–DC only power supply that is incapable of operating on household current;

(3) A power supply with a fixed, non-removable connection to an end-use device that is not a consumer product as defined under the Energy Policy and Conservation Act (as amended);

(4) A power supply whose output connector is uniquely shaped to fit only an end-use device that is not a consumer product;

(5) A power supply that cannot be readily connected to an end-use device that is a consumer product without significant modification or customization of the power supply itself or the end-use device;

(6) A power supply packaged with an end-use device that is not a consumer product, as evidenced by either:

(i) Such device being certified as, or declared to be in conformance with, a specific standard applicable only to non-consumer products. For example, a power supply model intended for use

with an end-use device that is certified to any of the following standards would not meet the EPCA definition of an EPS:

(A) CISPR 11 (Class A Equipment), ''Industrial, scientific and medical equipment—Radio-frequency disturbance—Limits and methods of measurement'';

(B) UL 1480A, ''Standard for Speakers for Commercial and Professional Use'';

(C) UL 813, ''Standard for Commercial Audio Equipment''; and

(D) UL 1727, ''Standard for Commercial Electric Personal Grooming Appliances''; or

(ii) Such device being excluded or exempted from inclusion within, or conformance with, a law, regulation, or broadly-accepted industry standard where such exclusion or exemption applies only to non-consumer products;

(7) A power supply distributed in commerce for use with an end-use device where:

(i) The end-use device is not a consumer product, as evidenced by either the circumstances in paragraph (6)(i) or (ii) of this definition; and

(ii) The end-use device for which the power supply is distributed in commerce is reasonably disclosed to the public, such as by identification of the end-use device on the packaging for the power supply, documentation physically present with the power supply, or on the manufacturer's or private labeler's public website; or

(8) A power supply that is not marketed for residential or consumer use, and that is clearly marked (or, alternatively, the packaging of the individual power supply, the shipping container of multiple such power supplies, or associated documentation physically present with the power supply when distributed in commerce is clearly marked) ''FOR USE WITH COMMERCIAL OR INDUSTRIAL EQUIPMENT ONLY'' or ''NOT FOR RESIDENTIAL OR CONSUMER USE,'' with the marking designed and applied so that the marking will be visible and legible during customary conditions for the item on which the marking is placed.

* * * * *

External power supply means an external power supply circuit that is used to convert household electric current into DC current or lower-voltage AC current to operate a consumer product. However, the term does not include any ''commercial and industrial power supply'' as defined in this section, or a power supply circuit, driver, or device that is designed exclusively to be connected to, and power—

(1) Light-emitting diodes providing illumination;

(2) Organic light-emitting diodes providing illumination; or

(3) Ceiling fans using direct current motors.

* * * * *

■ 3. Section 430.23 is amended by revising paragraph (bb) to read as follows:

§ 430.23 Test procedures for the measurement of energy and water consumption.

* * * * *

(bb) *External Power Supplies.* The energy consumption of an external power supply, including active-mode efficiency expressed as a percentage and the no-load, off, and standby mode energy consumption levels expressed in watts, shall be measured in accordance with appendix Z of this subpart.

* * * * *

■ 4. Appendix Z is revised to read as follows:

Appendix Z to Subpart B of Part 430—Uniform Test Method for Measuring the Energy Consumption of External Power Supplies

Note: Starting on [180 days after publication of the final rule in the **Federal Register**], manufacturers must make any representations regarding the energy efficiency or power consumption of external power supplies based upon results generated under this appendix. Prior to that date manufacturers must make any representations regarding the energy efficiency or power consumption of external power supplies based upon results generated under this appendix as it appeared at 10 CFR part 430, subpart B revised as of January 1, 2021. The provisions at section (4)(g)(2) of this appendix regarding the testing of units for which a wire or cord is not provided by the manufacturer are not required for use until such time as compliance is required with any amended standards for external power supplies provided in § 430.32(w) that are published after January 1, 2021.

1. *Incorporation by reference*

DOE incorporated by reference the entire standard for IEC 62301 in § 430.3; however, only enumerated provisions of this document are applicable to this appendix, as follows:

(a) IEC 62301, (''IEC 62301''), Household electrical appliances—Measurement of standby power, (Edition 2.0, 2011–01), as follows:

(i) Section 4.3.2 ''Supply voltage waveform'';

(ii) Section 4.4.1 ''Power measurement uncertainty'';

(iii) Section 5.3.3 ''Average reading method'';

(iv) Annex B ''Notes on the measurement of low power modes''; and

(v) Annex D ''Determination of uncertainty of measurement.''

(b) Reserved.

2. *Scope.*

This appendix covers the test requirements used to measure the energy consumption of external power supplies subject to the energy conservation standards set forth at § 430.32(w)(1).

3. *Definitions:* The following definitions are for the purposes of understanding terminology associated with the test method for measuring external power supply energy consumption.

Active mode means the mode of operation when the external power supply is connected to the main electricity supply and the output is (or ''all outputs are'' for external power supplies with multiple outputs) connected to a load (or ''loads'' for external power supplies with multiple outputs).

Active mode efficiency is the ratio, expressed as a percentage, of the total real output power produced by a power supply to the real input power required to produce it. IEEE Standard 1515–2000, 4.3.1.1 (Reference for guidance only, see § 430.4.)

Active power (P) (also *real power*) means the average power consumed by a unit. For a two terminal device with current and voltage waveforms i(t) and v(t), respectively, which are periodic with period T, the real or active power P is:

$$P = \frac{1}{T}\int_0^T v(t)i(t)dt$$

Adaptive external power supply means an external power supply that can alter its output voltage during active-mode based on an established digital communication protocol with the end-use application without any user-generated action.

Ambient temperature means the temperature of the ambient air immediately surrounding the unit under test.

Average Active-Mode Efficiency means the average of the active mode efficiencies at the loading conditions (100%, 75%, 50%, and 25% of unit under test's nameplate output current) for which that unit can sustain the output current.

Manual on-off switch is a switch activated by the user to control power reaching the device. This term does not apply to any mechanical, optical, or electronic switches that automatically disconnect mains power from the device when a load is disconnected from the device, or that control power to the load itself.

Minimum output current means the minimum current that must be drawn from an output bus for an external power supply to operate within its specifications.

Multiple-voltage external power supply means an external power supply that is designed to convert line voltage AC input into more than one simultaneous lower-voltage output.

Nameplate output current means the current output of the power supply as specified on the manufacturer's label on the power supply housing (either DC or AC) or, if absent from the housing, as provided by the manufacturer.

Nameplate output power means the power output of the power supply as specified on

the manufacturer's label on the power supply housing or, if absent from the housing, as specified in documentation provided by the manufacturer. For an adaptive external power supply with USB–PD ports, the nameplate output power is the product of its lowest nameplate output voltage and 2 amps for each USB–PD port and as specified on the manufacturer's label or documentation at the highest voltage.

Nameplate output voltage means the voltage output of the power supply as specified on the manufacturer's label on the power supply housing (either DC or AC).

No-load mode means the mode of operation when an external power supply is connected to the main electricity supply and the output is (or ''all outputs are'' for a multiple-voltage external power supply) not connected to a load (or ''loads'' for a multiple-voltage external power supply).

Off-mode is the condition, applicable only to units with manual on-off switches, in which the external power supply is:

(1) Connected to the main electricity supply;

(2) The output is not connected to any load; and

(3) All manual on-off switches are turned off.

Output bus means any of the outputs of the power supply to which loads can be connected and from which power can be drawn, as opposed to signal connections used for communication.

RMS means root mean square.

Single-voltage external AC–AC power supply means an external power supply that is designed to convert line voltage AC input into lower voltage AC output and is able to convert to only one AC output voltage at a time.

Standby mode means the condition in which the external power supply is in no-load mode and, for external power supplies with manual on-off switches, all such switches are turned on.

Switch-selectable single voltage external power supply means a single-voltage AC–AC or AC–DC power supply that allows users to choose from more than one output voltage.

Total harmonic distortion (''THD''), expressed as a percentage, is the RMS value of an AC signal after the fundamental component is removed and interharmonic components are ignored, divided by the RMS value of the fundamental component. THD of current is defined as:

$$THD = \frac{\sqrt{I_2^2 + I_3^2 + I_4^2 + \cdots I_n^2}}{I_1}$$

where I_n is the RMS value of the *n*th harmonic of the current signal.

Unit under test (''UUT'') is the external power supply being tested.

USB Power Delivery (''USB–PD'') EPS means an adaptive EPS that utilizes a USB Type-C output port and uses a digital protocol to communicate between the EPS and the end-user product to automatically switch between any output voltage within the range of 3.3 volts to 20 volts. The USB–PD output bus must be capable of delivering 3 amps at the lowest output voltage, and the currents must not exceed any of the following values for the supported voltages: 3 amps at 9 volts; 3 amps at 15 volts, and; 5 amps at 20 volts.

USB Type-C means the reversible 24-pin physical USB connector system that supports USB–PD and allows for the transmission of data and power between compatible USB products.

4. *Test Apparatus and General Instructions*

(a) Any power measurements recorded, as well as any power measurement equipment utilized for testing, shall conform to the uncertainty and resolution specifications in section 4.4.1, ''Power measurement uncertainty,'' as well as Annexes B, ''Notes on the measurement of low power modes,'' and D, ''Determination of uncertainty of measurement,'' of IEC 62301.

(b) Carry out tests in a room that has an air speed close to the unit under test (UUT) of ≤0.5 m/s. Maintain ambient temperature at 20 ± 5 °C throughout the test. Do not intentionally cool the UUT, for example, by use of separately powered fans, air conditioners, or heat sinks. Test the UUT on a thermally non-conductive surface. Products intended for outdoor use may be tested at additional temperatures, provided those are in addition to the conditions specified and are noted in a separate section on the test report.

(c) If the UUT is intended for operation on AC line-voltage input in the United States, test it at 115 V at 60 Hz. If the UUT is intended for operation on AC line-voltage input but cannot be operated at 115 V at 60 Hz, do not test it. Ensure the input voltage is within ±1% of the above specified voltage and the input frequency is within ±1% of the specified frequency.

(d) The input voltage source must be capable of delivering at least 10 times the nameplate input power of the UUT as is specified in IEEE 1515–2000. Regardless of the AC source type, the THD of the supply voltage when supplying the UUT in the specified mode must not exceed 2%, up to and including the 13th harmonic. The peak value of the test voltage must be within 1.34 and 1.49 multiplied by its RMS value.

(e) Select all leads used in the test set-up with appropriate wire gauges and lengths to minimize voltage drops across the wires during testing. See Table B.2—''Commonly used values for wire gages [*sic*] and related voltage drops'' in IEEE 1515–2000 for further guidance.

(f) Test Load. To load the power supply to produce all active-mode loading conditions, use passive loads, such as rheostats, or active loads, such as electronic loads. Resistive loads need not be measured precisely with an ohmmeter; simply adjust a variable resistor to the point where the ammeter confirms that the desired percentage of nameplate output current is flowing. For electronic loads, adjust the desired output current in constant current mode rather than adjusting the required output power in constant power mode.

(g)(1) Test the external power supply at the end of the wire or cord that connects to an end-use product, regardless of whether the end of the wire or cord is integrated into an end-use product or plugs into and out of an end-use product. If a separate wire or cord is provided by the manufacturer to connect the external power supply to an end-use product, use this wire or cord and perform tests at the end of the cord that connects to an end-use product. If the connection to an end-use product is removable, there are two options for connecting metering equipment to the output connection of the external power supply:

(i) Cut the cord immediately adjacent to the output connector, or

(ii) Attach leads and measure the efficiency from the output connector itself. If the connection to an end-use product is not removable, cut the cord immediately adjacent to the powered product and connect measurement probes at that point. Connect any additional metering equipment such as voltmeters and/or ammeters used in conjunction with resistive or electronic loads directly to the end of the output cable of the UUT. Conduct the tests on the sets of output wires that constitute the output busses. If the product has more than two output wires, including those wires that are necessary for controlling the product, the manufacturer must supply a connection diagram or test fixture that will allow the testing laboratory to put the UUT into active-mode. Figure 1 of this section provides one illustration of how to set up a single-voltage external power supply for testing; however, the actual test setup may vary pursuant to the type of external power supply being tested and the requirements of this appendix.

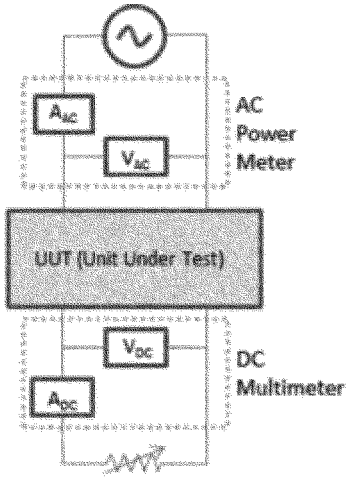

Figure 1. Example Connection Diagram for Single-Voltage External Power Supply Efficiency Measurements

(2) An external power supply that is not supplied with a wire or cord must be tested with a wire or an output cord recommended by the manufacturer.

(h) While external power supplies must be tested in their final, completed configuration in order to represent their measured efficiency on product labels or specification sheets, any functionality that is unrelated to the external power supply circuit may be disconnected during testing as long as the disconnection does not impact the functionality of the external power supply itself. Test the external power supply in its final configuration to the extent possible (within its enclosure and with all output cords that are shipped with it). Exclude from testing devices for which the primary load of the converted voltage within the device is not delivered to a separate end use product, *i.e.,* products in which the primary load of converted voltage is delivered within the device itself to execute the primary function of the device. Examples of excluded products may include consumer electronics with USB outputs, and lighting products with USB outputs.

(i) If a product serves one or more other major functions in addition to converting household electric current into DC current or lower-voltage AC current, components of the product that serve other functions may be disconnected before testing so that test measurements do not include power used by other functions and as long as disconnecting such components do not affect the ability of the product to convert household electric current into DC current or lower-voltage AC current. For example, consider a surge protector that offers outlets supplying AC household electric current and one or more USB outputs supplying DC current. If power is provided to the AC outlets through a surge protection circuit, but power to the USB outlet(s) is not, then the surge protection circuit may be disconnected from AC power during testing. Similarly, if a lighted manual on-off switch disconnects power only to the AC outlets, but not the USB outputs, then the manual on-off switch may be turned off and power to the light disconnected during testing.

5. *Test Measurement for all External Power Supplies other than Adaptive External Power Supplies:*

(a) Single-Voltage External Power Supply.

(1) Standby Mode and Active-Mode Measurement.

(i) Place in the ''on'' position any built-in switch in the UUT controlling power flow to the AC input, and note the existence of such a switch in the final test report.

(ii) Operate the UUT at 100% of nameplate output current for at least 30 minutes immediately prior to conducting efficiency measurements. After this warm-up period, monitor AC input power for a period of 5 minutes to assess the stability of the UUT. If the power level does not drift by more than 5% from the maximum value observed, the UUT is considered stable. If the UUT is stable, record the measurements obtained at the end of this 5-minute period. Measure subsequent loading conditions under the same 5-minute stability parameters. Note that only one warm-up period of 30 minutes is required for each UUT at the beginning of the test procedure. If the AC input power is not stable over a 5-minute period, follow the guidelines established by section 5.3.3 of IEC 62301 for measuring average power or accumulated energy over time for both input and output.

(iii) Test the UUT at the nameplate output voltage(s) at the loading conditions listed in Table 1, derated per the proportional allocation method presented in section 5(a)(1)(iv) of this appendix. Conduct efficiency measurements in sequence from Loading Condition 1 to Loading Condition 4 as indicated in Table 1 of this section. For Loading Condition 5, place the UUT in no-load mode, disconnect any additional signal connections to the UUT, and measure input power.

TABLE 1—LOADING CONDITIONS FOR UNIT UNDER TEST

Loading Condition 1	100% of Derated Nameplate Output Current ±2%.
Loading Condition 2	75% of Derated Nameplate Output Current ±2%.
Loading Condition 3	50% of Derated Nameplate Output Current ±2%.
Loading Condition 4	25% of Derated Nameplate Output Current ±2%.
Loading Condition 5	0%.

The 2% allowance pertains to nameplate output current, not the calculated current value. For example, a UUT at Loading Condition 3 may be tested in a range from 48% to 52% of the derated output current.

(A) If testing of additional, optional loading conditions is desired, conduct that testing in accordance with this test procedure and subsequent to completing the sequence described in section 5(a)(1)(iii) of this appendix.

(B) Where the external power supply lists both an instantaneous and continuous output current, test the external power supply at the continuous condition only.

(C) If an external power supply cannot sustain output at one or more of the Loading Conditions 1–4 as specified in Table 1 of this section, test the external power supply only at the loading conditions for which it can sustain output.

(iv) Use the following proportional allocation method to provide consistent

loading conditions for single-voltage external power supplies with multiple output busses. For additional explanation (provided for guidance only), please refer to section 6.1.1 of the California Energy Commission's ''Generalized Test Protocol for Calculating the Energy Efficiency of Internal Ac-Dc Power Supplies Revision 6.7,'' March 2014.

(A) Consider a power supply with N output busses, each with the same nameplate output voltages V_1, * * *, V_N, corresponding output current ratings I_1, * * *, I_N, and a nameplate output power P. Calculate the derating factor D by dividing the power supply maximum output power P by the sum of the maximum output powers of the individual output busses, equal to the product of port nameplate output voltage and current I_iV_i, as follows:

$$D = \frac{P}{\sum_{i=1}^{N} V_i I_i},$$

(B) If D ≥1, then loading every port to its nameplate output current does not exceed the overall maximum output power for the power supply. In this case, load each output bus to the percentages of its nameplate output current listed in Table 1 of this section. However, if D <1, it is an indication that loading each port to its nameplate output current will exceed the overall maximum output power for the power supply. In this case, and at each loading condition, load each output bus to the appropriate percentage of its nameplate output current as listed in Table 1, multiplied by the derating factor D.

(v) Test switch-selectable single-voltage external power supplies twice—once at the highest nameplate output voltage and once at the lowest.

(vi) Efficiency calculation. Calculate and record efficiency at each loading point by dividing the UUT's measured active output power at a given loading condition by the active AC input power measured at that loading condition.

(A) Calculate and record average efficiency of the UUT as the arithmetic mean of the efficiency values calculated at Loading Conditions 1, 2, 3, and 4 in Table 1 of this section.

(B) If, when tested, a UUT cannot sustain output current at one or more of the loading conditions as specified in Table 1, the average active-mode efficiency is calculated as the average of the loading conditions for which it can sustain output.

(C) If the UUT can only sustain one output current at any of the output busses, test it at the loading condition that allows for the maximum output power on that bus (*i.e.,* the highest output current possible at the highest output voltage on that bus).

(vii) Power consumption calculation. The power consumption of Loading Condition 5 (no-load) is equal to the active AC input power (W) at that loading condition.

(viii) Off-Mode Measurement. If the UUT incorporates manual on-off switches, place the UUT in off-mode, and measure and record its power consumption at Loading Condition 5 in Table 1 of this section. The measurement of the off-mode energy consumption must conform to the requirements specified in section 5(a)(1) of this appendix, except that all manual on-off switches must be placed in the ''off'' position for the off-mode measurement. The UUT is considered stable if, over 5 minutes with samples taken at least once every second, the AC input power does not drift from the maximum value observed by more than 1% or 50 milliwatts, whichever is greater. Measure the off-mode power consumption of a switch-selectable single-voltage external power supply twice—once at the highest nameplate output voltage and once at the lowest.

(b) Multiple-Voltage External Power Supply.

(1) Standby-Mode and Active-Mode Measurement.

(i) Place in the ''on'' position any built-in switch in the UUT controlling power flow to the AC input, and note the existence of such a switch in the final test report.

(ii) Operate the UUT at 100% of nameplate output current for at least 30 minutes immediately prior to conducting efficiency measurements. After this warm-up period, monitor AC input power for a period of 5 minutes to assess the stability of the UUT. If the power level does not drift by more than 1% from the maximum value observed, the UUT is considered stable. If the UUT is stable, record the measurements obtained at the end of this 5-minute period. Measure subsequent loading conditions under the same 5-minute stability parameters. Note that only one warm-up period of 30 minutes is required for each UUT at the beginning of the test procedure. If the AC input power is not stable over a 5-minute period, follow the guidelines established by section 5.3.3 of IEC 62301 for measuring average power or accumulated energy over time for both input and output.

(iii) Test the UUT at the nameplate output voltage(s) at the loading conditions listed in Table 2 of this section, derated per the proportional allocation method presented in section 5(b)(1)(iv) of this appendix. Active or passive loads used for efficiency testing of the UUT must maintain the required current loading set point for each output voltage within an accuracy of ±0.5%. Conduct efficiency measurements in sequence from Loading Condition 1 to Loading Condition 4 as indicated in Table 2 of this section. For Loading Condition 5, place the UUT in no-load mode, disconnect any additional signal connections to the UUT, and measure input power.

TABLE 2—LOADING CONDITIONS FOR UNIT UNDER TEST

Loading Condition 1	100% of Derated Nameplate Output Current ±2%.
Loading Condition 2	75% of Derated Nameplate Output Current ±2%.
Loading Condition 3	50% of Derated Nameplate Output Current ±2%.
Loading Condition 4	25% of Derated Nameplate Output Current ±2%.
Loading Condition 5	0%.

The 2% allowance pertains to nameplate output current, not the calculated current value. For example, a UUT at Loading Condition 3 may be tested in a range from 48% to 52% of the derated output current.

(A) If testing of additional, optional loading conditions is desired, conduct that testing in accordance with this test procedure and subsequent to completing the sequence described in section 5(b)(1)(iii) of this appendix.

(B) Where the external power supply lists both an instantaneous and continuous output current, test the external power supply at the continuous condition only.

(C) If an external power supply cannot sustain output at one or more of the Loading Conditions 1–4 as specified in Table 2 of this section, test the external power supply only at the loading conditions for which it can sustain output.

(iv) Use the following proportional allocation method to provide consistent loading conditions for multiple-voltage external power supplies. For additional explanation (provided for guidance only), please refer to section 6.1.1 of the California Energy Commission's ''Proposed Test Protocol for Calculating the Energy Efficiency of Internal Ac-Dc Power Supplies Revision 6.7,'' March 2014.

(A) Consider a power supply with N output busses, and nameplate output voltages V_1, * * *, V_N, corresponding output current ratings I_1, * * *, I_N, and a maximum output power P as specified on the manufacturer's label on the power supply housing, or, if absent from the housing, as specified in the documentation provided with the unit by the manufacturer. Calculate the derating factor D by dividing the power supply maximum output power P by the sum of the maximum output powers of the individual output busses, equal to the product of bus nameplate output voltage and current I_iV_i, as follows:

$$D = \frac{P}{\sum_{i=1}^{N} V_i I_i},$$

(B) If D ≥1, then loading every bus to its nameplate output current does not exceed the overall maximum output power for the power supply. In this case, load each output bus to the percentages of its nameplate output current listed in Table 2 of this section. However, if D <1, it is an indication that loading each bus to its nameplate output current will exceed the overall maximum

output power for the power supply. In this case, and at each loading condition, load each output bus to the appropriate percentage of its nameplate output current listed in Table 2 of this section, multiplied by the derating factor D.

(v) Minimum output current requirements. Depending on their application, some multiple-voltage power supplies may require a minimum output current for each output bus of the power supply for correct operation. In these cases, ensure that the load current for each output at Loading Condition 4 in Table 2 is greater than the minimum output current requirement. Thus, if the test method's calculated load current for a given voltage bus is smaller than the minimum output current requirement, the minimum output current must be used to load the bus. This load current shall be properly recorded in any test report.

(vi) Efficiency calculation. Calculate and record efficiency at each loading point by dividing the UUT's measured active output power at a given loading condition by the active AC input power measured at that loading condition.

(A) Calculate and record average efficiency of the UUT as the arithmetic mean of the efficiency values calculated at Loading Conditions 1, 2, 3, and 4, in Table 2 of this section.

(B) If, when tested, a UUT cannot sustain output current at one or more of the loading conditions as specified in Table 2 of this section, the average active mode efficiency is calculated as the average of the loading conditions for which it can sustain output.

(C) If the UUT can only sustain one output current at any of the output busses, test it at the loading condition that allows for the maximum output power on that bus (*i.e.,* the highest output current possible at the highest output voltage on that bus).

(vii) Power consumption calculation. The power consumption of Loading Condition 5 (no-load) is equal to the active AC input power (W) at that loading condition.

(2) Off-mode Measurement—If the UUT incorporates manual on-off switches, place the UUT in off-mode and measure and record its power consumption at Loading Condition 5 in Table 2 of this section. The measurement of the off-mode energy consumption must conform to the requirements specified in section (5)(b)(1) of this appendix, except that all manual on-off switches must be placed in the ''off'' position for the off-mode measurement. The UUT is considered stable if, over 5 minutes with samples taken at least once every second, the AC input power does not drift from the maximum value observed by more than 1% or 50 milliwatts, whichever is greater.

6. *Test Measurement for Adaptive External Power Supplies:*

(a) Single-Voltage Adaptive External Power Supply.

(1) Standby Mode and Active-Mode Measurement.

(i) Place in the ''on'' position any built-in switch in the UUT controlling power flow to the AC input, and note the existence of such a switch in the final test report.

(ii) Operate the UUT at 100% of nameplate output current for at least 30 minutes immediately prior to conducting efficiency measurements. After this warm-up period, monitor AC input power for a period of 5 minutes to assess the stability of the UUT. If the power level does not drift by more than 5% from the maximum value observed, the UUT is considered stable. If the UUT is stable, record the measurements obtained at the end of this 5-minute period. Measure subsequent loading conditions under the same 5-minute stability parameters. Note that only one warm-up period of 30 minutes is required for each UUT at the beginning of the test procedure. If the AC input power is not stable over a 5-minute period, follow the guidelines established by section 5.3.3 of IEC 62301 for measuring average power or accumulated energy over time for both input and output.

(iii) Test the UUT at the nameplate output voltage(s) at the loading conditions listed in Table 3 of this section, derated per the proportional allocation method presented in section 6(a)(1)(iv) of this appendix. Adaptive external power supplies must be tested twice—once at the highest nameplate output voltage and once at the lowest nameplate output voltage as described in the following sections.

(A) At the highest nameplate output voltage, test adaptive external power supplies in sequence from Loading Condition 1 to Loading Condition 4, as indicated in Table 3 of this section. For Loading Condition 5, place the UUT in no-load mode, disconnect any additional signal connections, and measure the input power.

(B) At the lowest nameplate output voltage, with the exception of USB–PD EPSs, test all adaptive external power supplies in sequence from Loading Condition 1 to Loading Condition 4, as indicated in Table 3 of this section. For USB–PD adaptive external power supplies, at the lowest nameplate output voltage, test the external power supply such that for Loading Conditions 1, 2, 3, and 4, all adaptive ports are loaded to 2 amperes, 1.5 amperes, 1 ampere and 0.5 amperes respectively. All non-adaptive ports will continue to be loaded as indicated in Table 3 of this section. For Loading Condition 5, test all adaptive external power supplies by placing the UUT in no-load mode, disconnecting any additional signal connections, and measuring the input power.

TABLE 3—LOADING CONDITIONS FOR A SINGLE-VOLTAGE ADAPTIVE EXTERNAL POWER SUPPLY

Loading Condition 1	100% of Derated Nameplate Output Current ±2%.
Loading Condition 2	75% of Derated Nameplate Output Current ±2%.
Loading Condition 3	50% of Derated Nameplate Output Current ±2%.
Loading Condition 4	25% of Derated Nameplate Output Current ±2%.
Loading Condition 5	0%.

The 2% allowance pertains to nameplate output current, not the calculated current value. For example, a UUT at Loading Condition 3 may be tested in a range from 48% to 52% of the derated output current.

(C) If testing of additional, optional loading conditions is desired, conduct that testing in accordance with this test procedure and subsequent to completing the sequence described in section 6(a)(1)(iii) of this appendix.

(D) Where the external power supply lists both an instantaneous and continuous output current, test the external power supply at the continuous condition only.

(E) If an external power supply cannot sustain output at one or more of the Loading Conditions 1–4 as specified in Table 3 of this section, test the external power supply only at the loading conditions for which it can sustain output.

(iv) Use the following proportional allocation method to provide consistent loading conditions for single-voltage adaptive external power supplies with multiple output busses. For additional explanation, please refer to section 6.1.1 of the California Energy Commission's ''Proposed Test Protocol for Calculating the Energy Efficiency of Internal Ac-Dc Power Supplies Revision 6.7,'' March 2014.

(A) Consider a power supply with N output busses, each with the same nameplate output voltages V_1, * * *, V_N, corresponding output current ratings I_1, * * *, I_N, and a maximum output power P as specified on the manufacturer's label on the power supply housing, or, if absent from the housing, as specified in the documentation provided with the unit by the manufacturer. Calculate the derating factor D by dividing the power supply maximum output power P by the sum of the maximum output powers of the individual output busses, equal to the product of port nameplate output voltage and current I_iV_i, as follows:

$$D = \frac{P}{\sum_{i=1}^{N} V_i I_i},$$

For USB–PD adaptive external power supplies, at the lowest nameplate output voltage, limit the contribution from each port to 10W when calculating the derating factor.

(B) If D ≥1, then loading every port to its nameplate output current does not exceed the overall maximum output power for the power supply. In this case, load each output bus to the percentages of its nameplate output current listed in Table 3 of this section. However, if D <1, it is an indication that loading each port to its nameplate output current will exceed the overall maximum

output power for the power supply. In this case, and at each loading condition, each output bus will be loaded to the appropriate percentage of its nameplate output current listed in Table 3 of this section, multiplied by the derating factor D.

(v) Efficiency calculation. Calculate and record the efficiency at each loading point by dividing the UUT's measured active output power at that loading condition by the active AC input power measured at that loading condition.

(A) Calculate and record average efficiency of the UUT as the arithmetic mean of the efficiency values calculated at Loading Conditions 1, 2, 3, and 4 in Table 3 of this section.

(B) If, when tested, a UUT cannot sustain the output current at one or more of the loading conditions as specified in Table 3 of this section, the average active-mode efficiency is calculated as the average of the loading conditions for which it can sustain output.

(C) If the UUT can only sustain one output current at any of the output busses, test it at the loading condition that allows for the maximum output power on that bus (*i.e.,* the highest output current possible at the highest output voltage on that bus).

(vi) Power consumption calculation. The power consumption of Loading Condition 5 (no-load) is equal to the active AC input power (W) at that loading condition.

(2) Off-Mode Measurement—If the UUT incorporates manual on-off switches, place the UUT in off-mode, and measure and record its power consumption at loading condition 5 in Table 3 of this section. The measurement of the off-mode energy consumption must conform to the requirements specified in section 6(a)(1) of this appendix, except that all manual on-off switches must be placed in the ''off'' position for the off-mode measurement. The UUT is considered stable if, over 5 minutes with samples taken at least once every second, the AC input power does not drift from the maximum value observed by more than 1% or 50 milliwatts, whichever is greater. Measure the off-mode power consumption of a single-voltage adaptive external power supply twice—once at the highest nameplate output voltage and once at the lowest.

(b) Multiple-Voltage Adaptive External Power Supply.

(1) Standby Mode and Active-Mode Measurement.

(i) Place in the ''on'' position any built-in switch in the UUT controlling power flow to the AC input, and note the existence of such a switch in the final test report.

(ii) Operate the UUT at 100% of nameplate output current for at least 30 minutes immediately prior to conducting efficiency measurements. After this warm-up period, monitor AC input power for a period of 5 minutes to assess the stability of the UUT. If the power level does not drift by more than 1% from the maximum value observed, the UUT is considered stable. If the UUT is stable, record the measurements obtained at the end of this 5-minute period. Measure subsequent loading conditions under the same 5-minute stability parameters. Note that only one warm-up period of 30 minutes is required for each UUT at the beginning of the test procedure. If the AC input power is not stable over a 5-minute period, follow the guidelines established by section 5.3.3 of IEC 62301 for measuring average power or accumulated energy over time for both input and output.

(iii) Test the UUT at the nameplate output voltage(s) at the loading conditions listed in Table 4 of this section, derated per the proportional allocation method presented in paragraph 6(b)(1)(iv) of this appendix. Active or passive loads used for efficiency testing of the UUT must maintain the required current loading set point for each output voltage within an accuracy of ±0.5%. Adaptive external power supplies must be tested twice—once at the highest nameplate output voltage and once at the lowest nameplate output voltage as described in the following sections.

(A) At the highest nameplate output voltage, test adaptive external power supplies in sequence from Loading Condition 1 to Loading Condition 4, as indicated in Table 4 of this section. For Loading Condition 5, place the UUT in no-load mode, disconnect any additional signal connections, and measure the input power.

(B) At the lowest nameplate output voltage, with the exception of USB–PD EPSs, test all other adaptive external power supplies, in sequence from Loading Condition 1 to Loading Condition 4, as indicated in Table 4 of this section. For USB–PD adaptive external power supplies, at the lowest nameplate output voltage, test the external power supply such that for Loading Conditions 1, 2, 3, and 4, all adaptive ports are loaded to 2 amperes, 1.5 amperes, 1 ampere and 0.5 amperes respectively. All non-adaptive ports will continue to be loaded as indicated in Table 4 of this section. For Loading Condition 5, test all adaptive external power supplies by placing the UUT in no-load mode, disconnecting any additional signal connections, and measuring the input power.

TABLE 4—LOADING CONDITIONS FOR A MULTIPLE-VOLTAGE ADAPTIVE EXTERNAL POWER SUPPLY

Loading Condition 1	100% of Derated Nameplate Output Current ±2%.
Loading Condition 2	75% of Derated Nameplate Output Current ±2%.
Loading Condition 3	50% of Derated Nameplate Output Current ±2%.
Loading Condition 4	25% of Derated Nameplate Output Current ±2%.
Loading Condition 5	0%.

The 2% allowance pertains to nameplate output current, not the calculated current value. For example, a UUT at Loading Condition 3 may be tested in a range from 48% to 52% of the derated output current.

(C) If testing of additional, optional loading conditions is desired, conduct that testing in accordance with this test procedure and subsequent to completing the sequence described in section 6(b)(1)(iii) of this appendix.

(D) Where the external power supply lists both an instantaneous and continuous output current, test the external power supply at the continuous condition only.

(E) If an adaptive external power supply is operating as a multiple-voltage external power supply at only the highest nameplate output voltage or lowest nameplate output voltage, test this external power supply as a multiple-voltage adaptive external power supply at both the highest nameplate output voltage and the lowest nameplate output voltage.

(F) If an external power supply has both adaptive and non-adaptive ports, and these ports operate simultaneously at multiple voltages, ensure that testing is performed with all ports active at both the highest and lowest nameplate output voltage. For example, if an external power supply has an USB–PD adaptive output bus that operates at 5 volts and 20 volts and a second non-adaptive output bus that operates at 9 volts, test this EPS at the highest nameplate output voltage with both the adaptive and non-adaptive ports respectively loaded at 20 volts and 9 volts; likewise, test it at the lowest nameplate output voltage with both the adaptive and non-adaptive ports respectively loaded at 5 volts and 9 volts.

(G) If an external power supply cannot sustain output at one or more of the Loading Conditions 1–4 as specified in Table 4 of this section, test the external power supply only at the loading conditions for which it can sustain output.

(iv) Use the following proportional allocation method to provide consistent loading conditions for multiple-voltage adaptive external power supplies. For additional explanation, please refer to section 6.1.1 of the California Energy Commission's ''Proposed Test Protocol for Calculating the Energy Efficiency of Internal Ac-Dc Power Supplies Revision 6.7,'' March 2014.

(A) Consider a multiple-voltage power supply with N output busses, and nameplate output voltages V_1, * * *, V_N, corresponding output current ratings I_1, * * *, I_N, and a maximum output power P as specified on the manufacturer's label on the power supply housing, or, if absent from the housing, as specified in the documentation provided with the unit by the manufacturer. Calculate the derating factor D by dividing the power supply maximum output power P by the sum of the maximum output powers of the individual output busses, equal to the product of bus nameplate output voltage and current I_iV_i, as follows:

$$D = \frac{P}{\sum_{i=3}^{N} V_i I_i},$$

For USB–PD adaptive external power supplies, at the lowest nameplate output voltage, limit the contribution from each port to 10W when calculating the derating factor.

(B) If D ≥1, then loading every bus to its nameplate output current does not exceed the overall maximum output power for the power supply. In this case, load each output bus to the percentages of its nameplate output current listed in Table 4 of this section. However, if D <1, it is an indication that loading each bus to its nameplate output current will exceed the overall maximum output power for the power supply. In this case, at each loading condition, load each output bus to the appropriate percentage of its nameplate output current listed in Table 4 of this section, multiplied by the derating factor D.

(v) Minimum output current requirements. Depending on their application, some multiple-voltage adaptive external power supplies may require a minimum output current for each output bus of the power supply for correct operation. In these cases, ensure that the load current for each output at Loading Condition 4 in Table 4 of this section is greater than the minimum output current requirement. Thus, if the test method's calculated load current for a given voltage bus is smaller than the minimum output current requirement, use the minimum output current to load the bus. Record this load current in any test report.

(vi) Efficiency calculation. Calculate and record the efficiency at each loading point by dividing the UUT's measured active output power at that loading condition by the active AC input power measured at that loading condition.

(A) Calculate and record average efficiency of the UUT as the arithmetic mean of the efficiency values calculated at Loading Conditions 1, 2, 3, and 4 in Table 4 of this section.

(B) If, when tested, a UUT cannot sustain the output current at one or more of the loading conditions as specified in Table 4, the average active-mode efficiency is calculated as the average of the loading conditions for which it can sustain output.

(C) If the UUT can only sustain one output current at any of the output busses, test it at the loading condition that allows for the maximum output power on that bus (*i.e.,* the highest output current possible at the highest output voltage on that bus).

(vii) Power consumption calculation. The power consumption of Loading Condition 5 (no-load) is equal to the active AC input power at that loading condition.

(2) Off-mode Measurement—If the UUT incorporates manual on-off switches, place the UUT in off-mode, and measure and record its power consumption at Loading Condition 5 in Table 4 of this section. The measurement of the off-mode energy consumption must conform to the requirements specified in section (6)(b)(1) of this appendix, except that all manual on-off switches must be placed in the ''off'' position for the off-mode measurement. The UUT is considered stable if, over 5 minutes with samples taken at least once every second, the AC input power does not drift from the maximum value observed by more than 1% or 50 milliwatts, whichever is greater. Measure the off-mode power consumption of a multiple-voltage adaptive external power supply twice—once at the highest nameplate output voltage and once at the lowest.

[FR Doc. 2021–23184 Filed 11–1–21; 8:45 am]

BILLING CODE 6450–01–P

SMALL BUSINESS ADMINISTRATION

13 CFR Part 121

RIN 3245–AH26

Small Business Size Standards: Calculation of Number of Employees for All Programs and of Average Annual Receipts in the Business Loan, Disaster Loan, and Small Business Investment Company Programs

AGENCY: U.S. Small Business Administration.

ACTION: Proposed rule.

SUMMARY: The U.S. Small Business Administration (SBA or Agency) is proposing to use a 24-month average to calculate a business concern's number of employees for eligibility purposes in all of SBA's programs. SBA also proposes to permit business concerns in its Business Loan, Disaster Loan, and Small Business Investment Company (SBIC) Programs to use a 5-year averaging period, in addition to the existing 3-year averaging period, for the purposes of calculating annual average receipts. These proposed changes will allow larger small businesses to retain their small business size status for longer, and some mid-sized businesses to regain small business status.

DATES: SBA must receive comments to this proposed rule on or before December 2, 2021.

ADDRESSES: Identify your comments by RIN 3245–AH26 and submit them by one of the following methods: (1) Federal eRulemaking Portal: *https://www.regulations.gov,* follow the instructions for submitting comments; or (2) Mail/Hand Delivery/Courier: Khem R. Sharma, Ph.D., Chief, Office of Size Standards, U.S. Small Business Administration, 409 Third Street SW, Mail Code 6530, Washington, DC 20416.

SBA will post all comments to this proposed rule on *https://www.regulations.gov.* If you wish to submit confidential business information (CBI) as defined in the User Notice at *https://www.regulations.gov,* you must submit such information to Khem R. Sharma, Ph.D., Chief, Office of Size Standards, U.S. Small Business Administration, 409 Third Street SW, Mail Code 6530, Washington, DC 20416, or send an email to *sizestandards@sba.gov.* Highlight the information that you consider to be CBI and explain why you believe SBA should withhold this information as confidential. SBA will review your information and determine whether it will make it public.

FOR FURTHER INFORMATION CONTACT: Khem R. Sharma, Ph.D., Chief, Office of Size Standards, (202) 205–6618 or *sizestandards@sba.gov.*

SUPPLEMENTARY INFORMATION:

I. Background Information

This proposal seeks to implement two legislative enactments that affect how SBA calculates a business concern's size to determine whether the business qualifies as small for SBA's contracting, loan,[1] and assistance programs. First, section 863 of the National Defense Authorization Act for Fiscal Year 2021, Public Law 116–283 (''NDAA''), changed the averaging period for SBA's employee-based size standards from 12 months to 24 months. Second, the Small Business Runway Extension Act of 2018, Public Law 115–324 (''SBREA'') amended section 3(a)(2)(C)(ii)(II) of the Small Business Act, 15 U.S.C. 632(a)(2)(C)(ii)(II), to modify the requirements for proposed small business size standards prescribed by an agency without separate statutory authority to issue size standards.

A. Changes to Calculation of Number of Employees

Section 863 of the NDAA amended two provisions of section 3(a)(2) of the Small Business Act, which sets forth requirements for an agency that would prescribe a proposed size standard. First, the NDAA provides that those requirements apply to the SBA when the agency acts pursuant to the authority in section 3(a)(2)(A) for SBA to specify small business definitions or size standards. Second, the NDAA amends section 3(a)(2)(C)(ii)(I) such that a proposed size standard for a manufacturing concern must provide for determining the size of the concern based on the employment during each of the concern's pay periods for the preceding 24 months. Previously, the statute specified the use of a 12-month period.

SBA proposes to implement the change to a 24-month period by amending 13 CFR 121.106. Section 121.106 currently provides that the size

[1] These changes do not apply to the Paycheck Protection Program because the authority for that program expired on June 30, 2021.

of a business concern under an employee-based size standard is calculated by averaging the concern's number of employees for each pay period in the preceding completed 12 calendar months. Part-time and temporary employees count as full-time employees, and the concern aggregates the employees of its domestic and foreign affiliates. SBA proposes to change the 12-month period in § 121.106 to a 24-month period. As a result, a concern would average its employees over all pay periods in the preceding completed 24 months. If it has not been in business for 24 months, the concern would average its number of employees for each pay period during which it has been in business.

This change to § 121.106 would apply to all employee-based size standards. Those size standards predominantly apply to manufacturers but not exclusively. Firms also use SBA's employee-based size standards in certain mining, utilities, transportation, publishing, telecommunications, insurance, research and development, and environmental remediation industries. Significant to government contracting, nonmanufacturers also qualify for small business status for government procurement using an employee-based size standard. Though nonmanufacturers and the nonmanufacturing industries are not covered by the NDAA's change to proposed size standards, SBA believes that it would be unworkable to use a 24-month average for manufacturing industries but retain a 12-month average for other industries with employee-based size standards. Firms may participate in multiple industries, and it is burdensome to use different averaging periods for different industries with employee-based size standards. SBA seeks comment on whether to include nonmanufacturers and nonmanufacturing industries in the change to a 24-month average for employee-based standards.

B. Changes to Calculation of Average Annual Receipts

In a final rule published December 5, 2019 (84 FR 66561), SBA implemented the SBREA by making changes to its receipts-based size standards for all SBA programs except the Business Loan and Disaster Loan Programs. The excepted programs include: (i) The 7(a) Loan Program, the Microloan Program, the Intermediary Lending Pilot Program, and the Development Company Loan Program (collectively, the ''Business Loan Programs''); and (ii) the Physical Disaster Business Loans, Economic Injury Disaster Loans, Military Reservist Economic Injury Disaster Loans, and Immediate Disaster Assistance Program loans (collectively, the ''Disaster Loan Programs'').

This proposed rule would extend the changes to SBA's receipts-based size standards to the Business Loan and Disaster Loan Programs. Currently, applicants in those loan programs must calculate their average annual receipts using a 3-year average. Under this proposal, applicants may choose to use either a 3-year average or a 5-year average. Thus, an applicant might be eligible for assistance if its 5-year average is equal to or less than the size standard, even if it would otherwise be ineligible because its 3-year average exceeds that size standard.

SBA also proposes to use the same treatment in SBA's SBIC program by SBIC applicants to choose to use either a 3-year average or a 5-year average. Recipients of SBIC assistance were not specifically identified in the December 2019 rulemaking that applied to all programs. Therefore, interested parties likely were not attuned to the effect that the December 2019 final rule might have on SBIC participants. This proposed rule invites SBICs and their portfolio companies to comment on SBA's proposed changes to the size rules for that program.

Like the changes in the December 2019 final rule, these proposed changes will expand the eligibility for SBA assistance to larger small businesses and some mid-sized businesses. An advanced small business may be able to retain its small business status for a longer period, if it is close to exceeding the size standard. A mid-sized business may be able to regain its small business status, if it would otherwise have exceeded the size standard.

These proposed changes differ in some respects from what SBA implemented in the earlier final rule. In particular, this proposal does not use the ''transition period'' that SBA included with the December 2019 final rule. That rule applied size-standard changes to the SBA government contracting programs and other non-loan programs. Starting on January 6, 2020, those programs began permitting participants to elect whether to use a 3-year average or a 5-year average to calculate average annual receipts. That election will end on January 6, 2022, however, marking the end of the transition period for those changes. After January 6, 2022, all government contractors will use a 5-year average for average annual receipts.

Conversely, the changes here allow for an election but do not have a transition period. SBA intends to make the election available indefinitely. This recognizes the differences between the loan programs and the government contracting programs, where firms are competing against one another. Where there is competition, businesses should be competing on an equal basis; therefore, the December 2019 final rule provided that, after the end of the transition period, government contractors all would use a 5-year averaging period. By contrast, in the loan programs, loan applicants are evaluated on an applicant-by-applicant basis. It is thus unnecessary to ensure that applicants use the same size criteria. As a result, SBA does not believe it is necessary to limit the election in the loan programs to a two-year period.

In soliciting comment for the December 2019 final rule, SBA received some comments from participants in the Business Loan programs. SBA has considered those comments in preparing this proposed rule.

Prior commenters asked that SBA use the 5-year average only for calculating average annual receipts, not for other loan application purposes. Accordingly, this proposal only authorizes the 3-or-5-year election for the calculation of receipts, not for any other purpose. Other calculations remain unchanged.

Prior commenters also asked that SBA authorize the Business Loan Programs to continue to use a 3-year average. Accordingly, this proposal uses an election, not a mandate. For the most part, lenders and applicants will continue to be able to use a 3-year average. The only exception will be where the applicant would not qualify as a small business using a 3-year average. In that case, the applicant may use a 5-year average if that would qualify the applicant as small. The applicant also might be able to qualify for loan assistance using the alternative size standard in section 3(a)(5)(B) of the Small Business Act.

II. Section-by-Section Analysis

A. Section 121.104

In paragraphs (c)(1), (c)(2), and (c)(3), SBA proposes to add the SBIC program to the list of programs that are excepted from SBA's current rule on calculating average annual receipts.

In paragraph (c)(4), SBA proposes to amend the calculation of average annual receipts for the Business Loan, Disaster Loan, and SBIC Programs. A business in those programs may calculate its receipts using either a 3-year average or a 5-year average for the purposes of determining its size under a receipts-based size standard. This change does

not affect the calculation of any other figures in SBA's programs. In particular, alternative size standards are not affected by this change.

B. Section 121.106

In paragraphs (b)(1) and (b)(3), SBA proposes to amend the current 12-month averaging period to a 24-month averaging period. Businesses that have been in existence for more than 24 months would calculate their number of employees by averaging the number of employees for each pay period for the preceding completed 24 months. Businesses that have been in existence for fewer than 24 months would average their number of employees for each pay period during their existence.

C. Section 121.903

In paragraph (a)(1)(i), SBA proposes to amend the averaging period for size standards proposed by other agencies from a 12-month period to a 24-month averaging period.

III. Request for Comments

SBA invites comments, input, or suggestions from interested parties on its proposal to change the 12-month averaging period for employee-based size standards to a 24-month averaging period.

SBA also invites comments, input, or suggestions from interested parties on its proposal to permit businesses in the Business Loan, Disaster Loan, and SBIC programs to use either a 3-year average or a 5-year average for calculating average annual receipts for the purposes of qualifying as a small business. The comments should address the following specific issues pertaining to the SBA's proposal:

1. SBA invites input on its proposal to allow for a 3-or-5-year election indefinitely, rather than using a transition period that would end the election on a specified date.
2. SBA invites input on the effects that this proposal would have on applicants and lenders in the Business Loan Program.
3. SBA invites input on the effects that this proposal would have on SBICs.
4. SBA invites input on the effects that this proposal would have on the Disaster Loan Program.

Compliance With Executive Orders 12866, 12988, 13132, and 13563, the Congressional Review Act (5 U.S.C. 801–808), the Regulatory Flexibility Act (5 U.S.C. 601–612), and the Paperwork Reduction Act (44 U.S.C. Ch. 35)

Executive Order 12866

The Office of Management and Budget (OMB) has determined that this proposed rule is a significant regulatory action for purposes of Executive Order 12866. Accordingly, below, SBA provides a benefit-cost analysis of this proposed rule, including: (1) A statement of the need for the proposed action, and (2) an evaluation of the benefits and costs—both quantitative and qualitative—of this regulatory action.

Congressional Review Act

OIRA has determined that this is not a major rule under 5 U.S.C. 804(2).

Subtitle E of the Small Business Regulatory Enforcement Fairness Act of 1996 (codified at 5 U.S.C. 801–808), also known as the Congressional Review Act or CRA, generally provides that before a rule may take effect, the agency promulgating the rule must submit a rule report, which includes a copy of the rule, to each House of the Congress and to the Comptroller General of the United States. SBA will submit a report containing this rule and other required information to the U.S. Senate, the U.S. House of Representatives, and the Comptroller General of the United States. A major rule under the CRA cannot take effect until 60 days after it is published in the **Federal Register**. OIRA has determined that this rule is not a ''major rule'' as defined by 5 U.S.C. 804(2).

Regulatory Impact Analysis

A. Benefit-Cost Analysis

1. What is the need for this regulatory action?

As stated elsewhere, the Small Business Act delegates to SBA's Administrator the responsibility for establishing small business size definitions (usually referred to as ''size standards''). First, Public Law 116–283 changed the averaging period for SBA's employee-based size standards from 12 months to 24 months. Second, in 2018, Public Law 115–324 modified the requirements for proposed small business size standards prescribed by an agency without separate statutory authority to issue size standards. Specifically, Public Law 115–324 changed the averaging period for receipts-based size standards for services industries from 3 years to 5 years.

The need of this proposed rule is to carry out the intent of Public Law 116–283 and Public Law 115–324, and to ensure consistency in the calculation of average number of employees and average annual receipts for size standards across the Federal Government. In addition to the averaging requirements, size standards prescribed under section 3(a)(2)(C)(ii) of the Small Business Act must meet two other requirements: (1) Be proposed with an opportunity for public notice and comment, and (2) be approved by the Administrator. Neither Public Law 116–283 nor Public Law 115–324 repeals these 2 requirements, and this proposed rule satisfies these requirements.

SBA's mission is to aid and assist small businesses through a variety of financial, procurement, business development and counseling, and disaster assistance programs. This regulatory action promotes the Administration's goals and objectives and meets the SBA's statutory responsibility to implement a new law impacting size definitions for small businesses. One of SBA's goals in support of promoting the Administration's objectives is to help small businesses succeed through access to capital, Federal Government contracts and purchases, and management, technical and disaster assistance.

2. What are the potential effects of this regulatory action?

i. Potential Effects of Changing the Calculation of Employees

Changing the periods for calculating average number of employees from 12 months to 24 months may enable some mid-size businesses that have just exceeded size standards to regain small business status. Similarly, it could also allow some advanced and larger small businesses about to exceed size standards to retain their small status for a longer period. However, it could also result in some advanced small businesses having the 24-months employee average that happens to be higher than the 12-month employee average, thus ejecting them out of their small business status sooner. Detailed impacts of the proposed change are discussed below.

It is difficult to determine the actual number of small and mid-size businesses that would be impacted by Public Law 116–283 and this regulatory action because there is no data on businesses' employment by month or by pay period. The employment data from the Economic Census special tabulation are only available once every 5 years. Similarly, the System for Award Management (SAM) only records the data on the concern's average number of employees for each pay period in the preceding completed 12 calendar months, but not their employee counts for each pay period or each month. For example, the 12-month average employee data for January 2020 is an

average of number of employees for each pay period during preceding completed 12 calendar months (*i.e.,* January 2019 to December 2019). Similarly, the 24-month average employee value for January 2020 is an average of number of employees for each pay period during preceding completed 24 calendar months (*i.e.,* January 2018 to December 2019).

Given the lack of employment data for each pay period or each month, SBA approximates a firm's 24-month average number of employees for January 2020 as follows:

$$AvgEmployee_{18-19} = \frac{1}{24} * \left\{(12 * AvgEmployee_{2018\ (SAM)}) + (12 * AvgEmployee_{2019\ (SAM)})\right\}$$

$$= \frac{1}{2} * \left\{(AvgEmployee_{2018\ (SAM)}) + (AvgEmployee_{2019\ (SAM)})\right\}$$

where:

$$AvgEmployee_{2018} = \frac{1}{t} \sum_{k=1}^{t} (Employee_{k,2018})$$

$$AvgEmployee_{2019} = \frac{1}{t} \sum_{k=1}^{t} (Employee_{k,2019})$$

where k = 1, 2, . . . t pay periods.

To estimate the 24-month employee average using the above formula, SBA analyzed the 2019 SAM extracts (as of September 1, 2019) and 2018 SAM extracts (as of September 1, 2018). The 24-month average employee formula would only work for businesses that were present in both 2018 and 2019 SAM extracts. One challenge was that some businesses found in 2019 SAM could not be found in 2018 SAM and vice versa. Excluding entities registered in SAM for purposes other than government contracting and entities ineligible for small business consideration (such as foreign governments and state-controlled institutions of higher learning), there were a total of 152,450 unique business concerns in 2019 SAM subject to at least one employee-based size standard. Of these concerns, 131,295 (or about 86.1 percent) were ''small'' in all North American Industry Classification System (NAICS) industries, 2,663 (or 1.7 percent) were ''small'' in some industries and ''not small'' in other industries, and 18,492 (or 12.1 percent) were ''not small'' in any industry subject to an employee-based size standard.

Excluding entities with ''null'' or ''zero'' employee values, 128,599 firms (or about 84.4 percent) appeared both in 2019 SAM and in 2018 SAM and were included in the 24-month average employee approximation and calculation of number of businesses impacted. Of those 128,599 matched firms subject to an employee-based size standard, 108,541 (or about 84.4 percent) were ''small'' in all NAICS industries, 2,526 (or 2.0 percent) were ''small'' in some industries and other than small (''not small'') in other industries, and 17,532 (or about 13.6 percent) were ''not small'' in any industry. In other words, 133,958 (or 87.9 percent) of 152,450 total concerns in SAM 2019 and 111,067 (or 86.4 percent) of 128,599 total matched firms were small in at least one NAICS industry with an employee-based size standard. These results are summarized in Table 1, ''Size Status of Businesses in Industries Subject to Employee-Based Size Standards,'' below.

TABLE 1—SIZE STATUS OF BUSINESSES IN INDUSTRIES SUBJECT TO EMPLOYEE-BASED SIZE STANDARDS

Size status	Total firms in 2019 SAM subject to least one employee-based size standard		Firms in both 2018 SAM and 2019 SAM (matched)		% matched	Total to matched ratio *
	Number of firms	%	Number of firms	%		
Small in at least one industry	133,958	87.9	111,067	86.4	82.9	1.206
Small in all industries	131,295	86.1	108,541	84.4	82.7	1.210
Small in some and not small in others	2,663	1.7	2,526	2.0	94.9	1.054
Large in all industries	18,492	12.1	17,532	13.6	94.8	1.055
Total	152,450	100.0	128,599	100.0	84.4	1.185

According to Table 2, ''Distribution of Business Concerns Subject to Employee-Based Size Standards by Number of NAICS Codes,'' below, the distribution of firms by the number of NAICS codes in the matched data is very similar to that for the overall 2019 SAM data. About 45 percent of firms were in only one NAICS code that has an employee-based size standard, about 40 percent in 2–5 NAICS codes, about 9 percent in 6–10 NAICS codes, and about 5 percent in more than 10 NAICS codes. In other words, 55 percent of firms were in multiple NAICS codes with employee-based size standards. Thus, it is quite possible that the proposed change may impact a firm's small business status in multiple industries. For purposes of this analysis, an impacted firm is defined as one that would be impacted by the change in terms of gaining, regaining, extending, or losing small business status in at least one industry with an employee-based size standard.

TABLE 2—DISTRIBUTION OF BUSINESS CONCERNS SUBJECT TO EMPLOYEE-BASED SIZE STANDARDS BY NUMBER OF NAICS CODES

Number of NAICS codes	Total firms in 2019 SAM with at least one employee-based NAICS code		Matched firms between 2019 and 2018 SAM	
	Count	%	Count	%
1 NAICS code	70,200	46.0	57,498	44.7
2 to 5 NAICS codes	61,266	40.2	52,599	40.9
6 to 10 NAICS codes	13,540	8.9	11,798	9.2
>10 NAICS codes	7,444	4.9	6,704	5.2
Total	152,450	100.0	128,599	100.0

Note: A business concern is defined in terms of a unique local (vendor) DUNS number.

A central premise of Public Law 116–283 is that a 24-month employee average (as opposed to a 12-month employee average) would enable some mid-size businesses who have recently exceeded the size standard to regain small business status and some advanced small businesses close to exceeding the size standard to retain their small business status for a longer period. However, this premise would only hold true when businesses' monthly employees are rising. When businesses' monthly employees are declining, due to economic downturns or other factors, the 24-month employee average could be higher than the 12-month employee average, thereby causing small businesses close to their size standards based on the 12-month average to lose their small business status sooner. In some cases where the 24-month employee average could be higher than the size standard, thereby forcing small businesses to lose their small status immediately when the longer 24-month averaging period becomes effective. Additionally, such businesses with declining employees would have to wait longer to regain their small business status.

ii. Potential Effects of Changing the Calculation of Receipts

Changing the periods for calculating average annual receipts from 3 years to 5 years, pursuant to Public Law 115–324, may enable some mid-size businesses that have just exceeded size standards to regain small business status. Similarly, it could also allow some advanced and larger small businesses about to exceed size standards to retain their small business status for a longer period. However, it could also result in some advanced small businesses having a 5-year receipts average that happens to be higher than the 3-year receipts average, thus ejecting them out of their small business status sooner. To mitigate this negative impact, SBA proposes to allow applicants to its Business Loan, Disaster Loan, and SBIC Programs to choose either a 3-year average or a 5-year average. Thus, an applicant might be eligible for assistance if its 5-year average is equal to or less than the size standard, even if it would otherwise be ineligible under the 3-year average. Detailed impacts of the proposed change are discussed below.

It is difficult to determine the actual number of small and mid-size businesses that would be impacted by Public Law 115–324 and this regulatory action because there is no annual data on receipts of businesses. The annual receipts data from the Economic Census special tabulation are only available once every 5 years. Similarly, the System for Award Management (SAM) only records the data on 3-year average annual receipts of businesses over their 3 preceding fiscal years, but not their annual receipts for each fiscal year. For example, the receipts data for year 2019 is an average of annual receipts for 2018, 2017, and 2016. Similarly, the receipts data for 2018 is an average of annual receipts for 2017, 2016, and 2015, and so on. A 5-year receipts average for 2019 would be an average of annual receipts for 2018, 2017, 2016, 2015, and 2014.

Given the lack of annual receipts for each year, SBA approximated a firm's 5-year average annual revenue for 2019 as follows:

$$AvgRevenue_{2014-18} = \frac{1}{5} * \{(2 * AvgRevenue_{2016\,(SAM)}) + (3 * AvgRevenue_{2019\,(SAM)})\}$$

where:

$$AvgRevenue_{2016\,(SAM)} = AvgRevenue_{2013-15} = = \frac{1}{3} * (Revenue_{2013} + Revenue_{2014} + Revenue_{2015})$$

and

$$AvgRevenue_{2019\,(SAM)} = AvgRevenue_{2016-18} = = \frac{1}{3} * (Revenue_{2016} + Revenue_{2017} + Revenue_{2018}).$$

This result may slightly underestimate the 5-year revenue average when annual revenues are rising (*i.e.,* 2015 revenue >2014 revenue >2013 revenue) and overestimate it if annual revenues are declining (*i.e.,* 2015 revenue <2014 revenue <2013 revenue).

To estimate the 5-year receipts average for 2019 using the above formula, SBA analyzed the 2019 SAM extracts (as of September 1, 2019) and 2016 SAM extracts (as of September 1, 2016). The above 5-year average annual receipts formula would only work for businesses that were present in both 2016 and 2018 SAM extracts. One challenge was that some businesses found in 2019 SAM could not be found in 2016 SAM and vice versa. Excluding entities registered in SAM for purposes other than government contracting and entities ineligible for small business consideration (such as foreign governments and state-controlled institutions of higher learning), there were a total of 334,990 unique business concerns in 2019 SAM subject to at least one receipts-based size standard. Of these concerns, 282,671 (or about 84.4 percent) were ''small'' in all North American Industry Classification System (NAICS) industries, 9,783 (or 2.9 percent) were ''small'' in some industries and ''not small'' in other industries, and 42,536 (or 12.7 percent) were ''not small'' in any industry.

Excluding entities with ''null'' or ''zero'' receipts values, 192,295 firms (or about 57.4 percent) appeared both in 2019 SAM and in 2016 SAM and were included in the 5-year average annual receipts approximation and calculation of number of businesses impacted. Of those 192,295 matched firms subject to a receipts-based size standard, 152,040 (or about 79 percent) were ''small'' in all NAICS industries, 8,081 (or 4.2 percent) were ''small'' in some industries and other than small (''not small'') in other industries, and 32,174 (or about 16.7 percent) were ''not small'' in any industry. In other words, 292,454 (or 87.3 percent) of 334,990 total concerns in SAM 2019 and 160,121 (or 83.3 percent) of 192,295 total matched firms were small in at least one NAICS industry with a receipts-based size standard. These results are summarized in Table 3, ''Size Status of Businesses in Industries Subject to Receipts-Based Size Standards,'' below.

TABLE 3—SIZE STATUS OF BUSINESSES IN INDUSTRIES SUBJECT TO RECEIPTS-BASED SIZE STANDARDS

Size status	Total firms in 2019 SAM subject to least one receipts-based standard		Firms in both 2016 SAM and 2019 SAM (matched)		% Matched	Total to matched ratio *
	Number of firms	%	Number of firms	%		
Small in at least one industry	292,454	87.3	160,121	83.3	54.8	1.826
Small in all industries	282,671	84.4	152,040	79.1	53.8	1.859
Small in some and not small in others	9,783	2.9	8,081	4.2	82.6	1.211
Large in all industries	42,536	12.7	32,174	16.7	75.6	1.322
Total	334,990	100.0	192,295	100.0	57.4	1.742

* To be used to translate the results from the matched data to overall 2019 SAM data.

According to Table 4, ''Distribution of Business Concerns Subject to Receipts-Based Size Standards by Number of NAICS Codes,'' below, the distribution of firms by the number of NAICS codes in the matched data is very similar to that for the overall 2019 SAM data. About 41–43 percent of firms were in only one NAICS code that has a receipts-based size standard, about 35 percent in 2–5 NAICS codes, about 12 percent in 6–10 NAICS codes, and about 8–10 percent in more than 10 NAICS codes. In other words, 57–59 percent of firms were in multiple NAICS codes with receipts-based size standards. Thus, it is quite possible that the proposed change may impact a firm's

small business status in multiple industries. For purposes of this analysis, an impacted firm is defined as one that would be impacted by the change in terms of gaining, regaining, extending, or losing small business status in at least one industry with a receipts-based size standard.

TABLE 4—DISTRIBUTION OF BUSINESS CONCERNS SUBJECT TO RECEIPTS-BASED SIZE STANDARDS BY NUMBER OF NAICS CODES

Number of NAICS codes	Total firms in 2019 SAM with at least one receipts-based NAICS code		Matched firms between 2019 and 2016 SAM	
	Count	%	Count	%
1 NAICS code	145,267	43.4	79,701	41.4
2 to 5 NAICS codes	120,078	35.8	68,168	35.4
6 to 10 NAICS codes	40,595	12.1	24,461	12.7
>10 NAICS codes	29,050	8.7	19,965	10.4
Total	334,990	100.0	192,295	100.0

Note: A business concern is defined in terms of a unique local (vendor) DUNS number.

A central premise of Public Law 115–324 is that a 5-year annual receipts average (as opposed to a 3-year annual receipts average) would enable some mid-size businesses who have recently exceeded the size standard to regain small business status and some advanced small businesses close to exceeding the size standard to retain their small business status for a longer period. However, this premise would only hold true when businesses' annual revenues are rising. When businesses' annual revenues are declining, due to economic downturns or other factors, the 5-year annual receipts average could be higher than the 3-year annual receipts average, thereby causing small businesses close to their size standards to lose their small business status sooner. To mitigate such negative impacts on small businesses, SBA proposes, in consideration of public comments on the prior proposed rule and the results from its own analysis, to permit businesses in the Business Loan, Disaster Loan, and SBIC Programs to use either a 3-year average or a 5-year average for calculating average annual receipts for the purposes of qualifying as a small business.

B. Impacts on Businesses From Proposed Changes in Calculation of Employees and Receipts for Size Standards

1. Impacts on Businesses From Changing the Averaging Period for Employees From 12 Months to 24 Months

By comparing the approximated 24-month employee average with the current employee-based size standard for each of the 128,599 matched business concerns in each NAICS code subject to an employee-based size standard, SBA identifies the following 4 possible impacts from changing the averaging period for employees from 12 months to 24 months:

i. The number of mid-size businesses that have exceeded the size standard and would regain small business status in at least one NAICS industry with an employee-based size standard (*i.e.,* 12-month average > size standard ≥ 24-month average)—expansive impact;

ii. The number of advanced small businesses within 10 percent below the size standard that would have their small business status extended for a longer period in at least one NAICS industry with an employee-based standard (24-month average < 12-month average ≤ size standard *and* 0.9*size standard < 12-month average ≤ size standard)—expansive impact;

iii. The number of currently small businesses that would lose their small business status in at least one NAICS industry subjected to an employee-based size standard (*i.e.,* 12-month average ≤ size standard < 24-month average)—contractive impact; and

iv. The number of advanced small businesses within 10 percent below the size standard that would have their small status shortened in at least one NAICS industry subject to an employee-based standard (12-month average < 24-month average ≤ size standard *and* 0.9*size standard < 12-month average ≤ size standard)—contractive impact.

In this proposed rule, SBA is changing the period for calculation of average employees for all of its employee-based size standards from 12 months to 24 months. The purpose of Public Law 116–283 is to allow small businesses more time to grow and develop competitiveness and infrastructure so that they are better prepared to succeed under full and open competition once they outgrow the size threshold. However, as stated previously, a longer 24-month averaging period may not always and necessarily provide relief to every small business concern. As discussed previously, when monthly employees are declining, the 24-month average would be higher than the 12-month average, thereby ejecting some advanced small businesses out of their small business status sooner or rendering some small businesses under the 12-month average not small immediately.

As discussed earlier, the change in the averaging period for employees from 12 months to 24 months results in four different types of impacts on small businesses: (i) Enabling current large or mid-size businesses to gain small business status (impact i); (ii) enabling current advanced small businesses to lengthen their small business status (impact ii); (iii) causing current small businesses to lose their small business status (impact iii); and (iv) causing current small businesses to shorten their small business status (impact iv). Table 5, ''Percentage Distribution of Impacted Firms with Employee Based Size Standards by the Number of NAICS Codes,'' below, provides these results based on the 2019 SAM—2018 SAM matched firms.

It is highly notable that the distribution of impacted firms by the number of NAICS codes, as shown in Table 5, is very different as compared to a similar distribution based on the overall matched and total 2019 SAM data (*see* Table 2), especially with respect to firms with only one NAICS code and those with more than 5 NAICS codes. For example, about 45 percent of all firms in the overall data were associated with only one NAICS code, as compared only about 20 percent among impacted firms. Similarly, firms with more than 5 NAICS codes accounted for about 13–14 percent of all firms in the original data, as compared

to 30–40 percent among impacted firms. It is also notable that, among the industries with employee-based size standard, NAICS Sectors 31–33 and 42 together accounted for about 90 percent of impacted firms (in terms of both contractive and expansive impacts), with Sector 31–33 (Manufacturing) accounting for about 65 percent and Sector 42 (Wholesale Trade) about 25 percent.

TABLE 5—PERCENTAGE DISTRIBUTION OF IMPACTED FIRMS WITH EMPLOYEE BASED SIZE STANDARDS BY THE NUMBER OF NAICS CODES

Impact *	Number of impacted firms	% Distribution of impacted firms by number of NAICS codes				
		1 NAICS code	2–5 NAICS codes	6–10 NAICS codes	>10 NAICS codes	Total
Currently small in all NAICS codes						
Impact (ii)	195	33.3	47.2	10.3	9.2	100
Impact (iii)	178	33.1	44.4	15.7	6.7	100
Impact (iv)	66	19.7	47.0	13.6	19.7	100
Currently large business in all NAICS codes						
Impact (i)	188	39.9	44.1	11.2	4.8	100
Currently small in some NAICS and not small in others						
Impact (i)	182	0	34.1	31.9	34.1	100
Impact (ii)	130	0	36.2	32.3	31.5	100
Impact (iii)	42	0	40.5	40.5	19.0	100
Impact (iv)	20	0	50	15	35	100
Total impact by impact type						
Impact (i)	370	20.3	39.2	21.4	19.2	100
Impact (ii)	325	20.0	42.8	19.1	18.2	100
Impact (iii)	220	18.2	29.5	13.8	6.2	100
Impact (iv)	86	15.1	47.7	14.0	23.3	100
Overall impact						
Expansive	689	20.3	40.8	20.2	18.7	100
Contractive	306	23.5	44.8	18.6	13.1	100
Total	995	21.3	42.0	19.7	17.0	100

* Impact (i) = Current large businesses gaining small status; Impact (ii) = Current small businesses extending small status; Impact (iii) = Current small businesses losing small status; Impact (iv) = Current small businesses shortening small status.

Each of these impacts was then multiplied by an applicable factor or ratio, as shown in the last column of Table 1, to obtain the respective impacts corresponding to all firms in 2019 SAM subject to at least one employee-based size standard. These results are presented below in Table 6, ''Impacts from Changing the Averaging Period for Employees from 12 Months to 24 Months.'' The last column of the table shows the percent of firms impacted relative to all business concerns in 2019 SAM. Because the SAM data only captures businesses that are primarily interested in Federal procurement opportunities, the SAM-based results do not fully capture the impacts the proposed change may have on businesses participating in various non-procurement programs that apply to SBA's employee-based size standards, such as SBA loan programs and exemptions from compliance with paperwork and other regulatory requirements.

The Economic Census, combined with the Census of Agriculture and County Business Patterns Reports, provides for each NAICS code information on the number of total small and large businesses subjected to an employee-based size standard. Based on the matched SAM data, SBA computed percentages of businesses impacted under each impact category for each NAICS industry subject to an employee-based size standard. By applying such percentages to the 2012 Economic Census tabulation (the latest available), SBA estimated the number of all businesses impacted under each impact type for each NAICS code subject to an employee-based size standard. These results are presented in Table 7, ''Impacts from Changing the Averaging Period for Employees from 12 Months to 24 Months (2012 Economic Census),'' below.

TABLE 6—IMPACTS FROM CHANGING THE AVERAGING PERIOD FOR EMPLOYEES FROM 12 MONTHS TO 24 MONTHS

Impact [1]	Firms impacted in matched dataset	Total to matched ratio	Total firms impacted in 2019 SAM	Total firms in 2019 SAM	% Impacted
Entities only small under all NAICS code(s)					
Impact (ii)	195	1.210	236	131,295	0.2
Impact (iii)	178	1.210	215	131,295	0.2
Impact (iv)	66	1.210	80	131,295	0.1
Entities other than small under all NAICS code(s)					
Impact (i)	188	1.055	198	18,492	1.1
Entities small in some NAICS code(s) and other than small in other(s)					
Impact (i)	182	1.054	192	2,663	7.2
Impact (ii)	130	1.054	137	2,663	5.1
Impact (iii)	42	1.054	44	2,663	1.7
Impact (iv)	20	1.054	21	2,663	0.8
Total impact by impact type					
Impact (i)	370	.....	390	21,155	1.8
Impact (ii)	325	.....	373	133,958	0.3
Impact (iii)	220	.....	260	133,958	0.2
Impact (iv)	86	.....	101	133,958	0.1
Overall total by expansive or contractive impact [2]					
Expansive *[impact (i) or impact (ii)]*	689	1.098	757	152,450	0.5
Contractive *[impact (iii) or impact (iv)]*	306	1.178	361	152,450	0.2
Total impact	995	.....	1,117	152,450	0.7

[1] Impact (i) = Current large businesses gaining small business status; Impact (ii) = Current small businesses extending small status; Impact (iii) = Current small businesses losing small status; Impact (iv) = Current small businesses shortening small status.
[2] Number of firms under overall positive, negative and total impacts refer to the number of unique firms. Some firms could appear in multiple impact types and hence individual impacts may not add up to overall impact.

TABLE 7—IMPACTS FROM CHANGING THE AVERAGING PERIOD FOR EMPLOYEES FROM 12 MONTHS TO 24 MONTHS

[2012 Economic census]

Impact [1]	Total firms (in million)	Estimate of impacted firms	% Impacted
Impact (i)	22,324	281	1.3
Impact (ii)	657,942	1,203	0.2
Impact (iii)	657,942	763	0.1
Impact (iv)	657,942	287	0.04
Overall impact			
Expansive *[impact (i) or impact (ii)]*	680,266	1,484	0.2
Contractive *[impact (iii) or impact (iv)]*	657,942	1,050	0.2
Total impact	680,266	2,534	0.4

[1] Impact (i) = Current large businesses gaining small status; Impact (ii) = Current small businesses extending small status; Impact (iii) = Current small businesses losing small status; Impact (iv) = Current small businesses shortening small status.

Currently large or mid-size businesses regaining small business status would become eligible for various benefits as small business concerns, including access to Federal set-aside contracts, SBA's guaranteed loans and disaster assistance, reduced patent fees, and exemptions from various compliance and paperwork requirements. With their small business status extended, advanced small businesses would continue to receive such benefits for a longer period. However, the proposed change may also cause some small businesses to lose their small business status in at least one employee-based size standard and access to small business assistance, especially Federal set-aside opportunities.

2. Impacts on Businesses From Changing the Averaging Period for Receipts From 3 Years to 5 Years

By comparing the approximated 5-year annual receipts average with the current receipts-based size standard for each of the 192,295 matched business concerns in each NAICS code subject to a receipts-based size standard, in this proposed rule, SBA identifies the

following 4 possible impacts from changing the averaging period for annual receipts from 3 years to 5 years:

i. The number of mid-size businesses that have exceeded the size standard and would regain small business status in at least one NAICS industry with a receipts-based size standard (*i.e.,* 3-year average > size standard ≥ 5-year average)—expansive impact;

ii. The number of advanced small businesses within 10 percent below the size standard that would have their small business status extended for a longer period in at least one NAICS industry with a receipts-based standard (5-year average < 3-year average ≤ size standard *and* 0.9*size standard < 3-year average ≤ size standard)—expansive impact;

iii. The number of currently small businesses that would lose their small business status in at least one NAICS industry subjected to a receipts-based size standard (*i.e.,* 3-year average ≤ size standard < 5-year average)—contractive impact; and

iv. The number of advanced small businesses within 10 percent below the size standard that would have their small business status shortened in at least one NAICS industry subject to a receipts-based standard (3-year average < 5-year average ≤ size standard *and* 0.9*size standard < 3-year average ≤ size standard)—contractive impact.

In this proposed rule, SBA is changing the period for calculation of average annual receipts for SBA receipts-based size standards for Business Loan, Disaster Loan, and SBIC Programs from 3 years to 5 years. The purpose of Public Law 115–324 is to allow small businesses more time to grow and develop competitiveness and infrastructure so that they are better prepared to succeed under full and open competition once they outgrow the size threshold. However, a longer 5-year averaging period may not always and necessarily provide relief to every small business concern. As discussed in the prior proposed rule, when annual revenues are declining or when annual revenues for the latest 3 years are lower than those for the earliest 2 years of the 5-year period, the 5-year average would be higher than the 3-year average, thereby ejecting some advanced small businesses out of their small business status sooner or rendering some small businesses under the 3-year average not small immediately.

There are 4 different types of impacts on small businesses from changes to the averaging period for annual receipts from 3 years to 5 years as follows: (i) Enabling current large or mid-size businesses to gain small business status (impact i); (ii) enabling current advanced small businesses to lengthen their small business status (impact ii); (iii) causing current small businesses to lose their small business status (impact iii); and (iv) causing current small businesses to shorten their small business status (impact iv).

However, with the SBA's proposal to permit businesses in the Business Loan, Disaster Loan, and SBIC programs to use either a 3-year average or a 5-year average for calculating average annual receipts for the purposes of qualifying as a small business, the two contractive impacts (namely impact (iii) and impact (iv)) do not apply to this proposed rule. Accordingly, this proposed rule provides the analysis of the two expansive impacts of changing the averaging periods for annual receipts from 3 years to 5 years (namely impact (i) and impact (ii)) only.

Table 8, ''Percentage Distribution of Impacted Firms with Receipts Based Size Standards by the Number of NAICS Codes,'' below, provides these results based on the 2019 SAM—2016 SAM matched firms.

TABLE 8—PERCENTAGE DISTRIBUTION OF IMPACTED FIRMS WITH RECEIPTS BASED SIZE STANDARDS BY THE NUMBER OF NAICS CODES

Impact*	Number of impacted firms	% Distribution of impacted firms by number of NAICS codes				
		1 NAICS code	2–5 NAICS codes	6–10 NAICS codes	>10 NAICS codes	Total
Currently large in all NAICS codes						
Impact (i)	899	36.3	33.9	12.6	17.2	100.0
Currently small in all NAICS codes						
Impact (ii)	1,227	27.3	36.3	17.8	18.6	100.0
Currently small in some NAICS and not small in others						
Impact (i)	1,761	0	27.4	22.7	50.0	100.0
Impact (ii)	1,072	0	27.8	24.3	47.9	100.0
Total impact by impact type						
Impact (i)	2,660	12.3	29.6	19.2	38.9	100.0
Impact (ii)	2,299	14.6	32.3	20.8	32.3	100.0
Total expansive impact	4,702	14.1	31.8	20.2	34.0	100.0

*Impact (i) = Current large businesses gaining small business status; and Impact (ii) = Current small businesses extending small business status.

It is highly notable that the distribution of impacted firms by the number of NAICS codes, as shown in Table 8, is very different as compared to a similar distribution based on the overall matched and total 2019 SAM data (*see* Table 4), especially with respect to firms with only one NAICS code and those with more than 5 NAICS codes. For example, as shown in Table 4, above, more than 40 percent of all firms in the overall data were associated with only one NAICS code, as compared to less than 15 percent among impacted firms in Table 8. Similarly, firms with more than 5 NAICS codes accounted for about 20 percent of all firms in the original data, as compared to more than

50 percent among impacted firms. It is also notable that, among the industries with receipts based size standards, NAICS Sectors 54, 56, and 23 together accounted for more than 70 percent of impacted firms, with Sector 54 (Professional, Scientific and Technical Services) accounting for about 30–35 percent, followed by Sector 23 (Construction) about 25–30 percent, and Sector 56 (Administrative and Support, Waste Management and Remediation Services) about 10–13 percent.

Each of these impacts was then multiplied by an applicable factor or ratio, as shown in the last column of Table 3, to obtain the respective impacts corresponding to all firms in 2019 SAM subject to at least one receipts-based size standard. These results are presented below in Table 9, ''Impacts from Changing the Averaging Period for Receipts from 3 Years to 5 Years.'' The last column of the table shows the percent of firms impacted relative to all business concerns in 2019 SAM.

Because the SAM data only captures businesses that are primarily interested in Federal procurement opportunities, the SAM-based results do not fully capture the impacts the proposed change may have on businesses participating in various non-procurement programs that apply SBA's receipts-based size standards, such as exemptions from compliance with paperwork and other regulatory requirements.

TABLE 9—IMPACTS FROM CHANGING THE AVERAGING PERIOD FOR RECEIPTS FROM 3 YEARS TO 5 YEARS

Impact [1]	Firms impacted in matched dataset	Total to matched ratio (Table 1)	Total firms impacted in 2019 SAM	Total firms in 2019 SAM	% Impacted
Entities other than small under all NAICS code(s)					
Impact (i)	899	1.32	1,189	42,536	2.8
Entities small under all NAICS code(s)					
Impact (ii)	1,227	1.859	2,281	282,671	0.8
Entities small in some NAICS code(s) and other than small in other(s)					
Impact (i)	1,761	1.211	2,132	9,783	21.8
Impact (ii)	1,072	1.211	1,298	9,783	13.3
Total expansive impact by impact type					
Impact (i)	2,660	.....	3,320	52,319	6.3
Impact (ii)	2,299	.....	3,579	292,454	1.2
Overall total expansive impact [2]	4,702	1.391	6,542	334,990	2.0

[1] Impact (i) = Current large businesses gaining small business status; and Impact (ii) = Current small businesses extending small business status.

[2] Number of firms under total positive impacts refer to the number of unique firms. Some firms could appear in both impact types and hence individual impacts may not add up to overall impact.

The Economic Census, combined with the Census of Agriculture and County Business Patterns Reports, provides for each NAICS code information on the number of total small and large businesses subjected to a receipts-based size standard. Based on the matched SAM data, SBA computed percentages of businesses impacted under each impact category for each NAICS industry subject to a receipts-based size standard. By applying such percentages to the 2012 Economic Census tabulation, SBA estimated the number of all businesses impacted under each impact type for each NAICS code subject to a receipts-based size standard. These results are presented in Table 10, ''Impacts from Changing the Averaging Period for Receipts from 3 Years to 5 Years (2012 Economic Census),'' below.

TABLE 10—IMPACTS FROM CHANGING THE AVERAGING PERIOD FOR RECEIPTS FROM 3 YEARS TO 5 YEARS

[2012 Economic census]

Impact [1]	Total firms	Estimate of impacted firms	% Impacted
Impact (i)	271,505	8,565	3.2
Impact (ii)	6,896,633	60,176	0.9
Overall expansive impact	7,168,138	68,742	1.0

[1] Impact (i) = Current large businesses gaining small business status; and Impact (ii) = Current small businesses extending small business status.

Currently large or mid-size businesses regaining small business status would get various benefits as small business concerns, including access to SBA loan programs, and exemptions from various compliance and paperwork requirements. With their small business status extended, advanced small businesses would continue to receive such benefits for a longer period. However, the change from 3-year average receipts to 5-year average may also harm some small businesses by causing them to lose or shorten their small business status in at least one

receipts-based size standard, thereby depriving them of access to small business assistance, including SBA's lending. To mitigate such impacts, SBA is allowing businesses to elect either the 3-year average annual receipts or the 5-year average annual receipts for the Business Loan, Disaster Loan, and SBIC programs. SBA seeks comment on implementation of Public Law 115–324 for the Business Loan, Disaster Loan, and SBIC programs.

C. The Baseline

1. Baseline for Changing the Averaging Period for Employees From 12 Months to 24 Months

In this rulemaking, SBA establishes an appropriate baseline to evaluate benefits, costs, or transfer impacts of this action and alternative approaches considered, if any. A baseline should represent the agency's best assessment of what the world would look like absent the regulatory action. For a new regulatory action modifying an existing regulation (such as changing the calculation of the average number of employees from 12 months to 24 months), a baseline assuming no change to the regulation (*i.e.,* maintaining the status quo) generally provides an appropriate benchmark for evaluating benefits, costs, or transfer impacts of proposed regulatory changes and their alternatives.

Based on the 2012 Economic Census special tabulations (the latest available), 2012 County Business Patterns Reports (for industries not covered by the Economic Census), and 2012 Agricultural Census tabulations (for agricultural industries), of a total of about 7.2 million firms in all industries with employee-based size standards, about 96 percent were considered small and 4 percent other than small under the 12-month employee average. Similarly, of 334,990 businesses that were subject to at least one employee-based size standard and eligible for Federal contracting, 87.3 percent were small in at least one NAICS code and 12.7 percent other than small in all NAICS codes with an employee-based size standard.

Based on the data from the Federal Procurement Data System—Next Generation (FPDS–NG) for fiscal year 2019, on average, about 39,714 unique firms in industries subject to employee-based size standards received at least one Federal contract during 2019, of which 85.3 percent were small. Businesses subject to employee-based size standards received $232.6 billion in annual average Federal contract dollars in 2019, of which nearly $47 billion or about 20.2 percent went to small businesses. Of total dollars awarded to small businesses subject to employee-based size standards, $23.8 billion or 50.6 percent was awarded through various small business set-aside programs and 49.4 percent was awarded through non-set aside contracts.

Based on SBA's internal data on its loan programs, small businesses subject to employee-based size standards received, on an annual basis, a total of 7,672 7(a) and 504 loans for fiscal years 2018–2020, totaling $4.9 billion, of which 75 percent was issued through the 7(a) program and 25 percent was issued through the CDC/504 program. During fiscal years 2016–2018, small businesses in those industries also received about 400 loans through the SBA's disaster loan program, totaling about $0.04 billion on an annual basis. Table 11, ''Baseline Analysis of Employee-Based Size Standards,'' below, provides these baseline results.

Besides set-aside contracting and financial assistance discussed above, small businesses also benefit through reduced fees, less paperwork, and fewer compliance requirements that are available to small businesses through Federal agencies that use SBA's size standards. However, SBA has no data to estimate the number of small businesses receiving such benefits.

TABLE 11—BASELINE ANALYSIS OF EMPLOYEE-BASED SIZE STANDARDS

Measure	Value
Total industries subject to employee-based size standards	500
Total firms subject to at least one employee-based size standard (million)—2012 Economic Census	680,266
Total small firms subject to at least one employee-based size standard (million)—2012 Economic Census	657,942
Total small firms subject to at least one employee-based size standard as % of total firms—2012 Economic Census	96.7
Total business concerns in SAM [1] (as of September 1, 2019)	403,116
Total business concerns subject to a employee-based size standard in at least one NAICS code [2] (2019 SAM)	152,450
Total businesses that are small in at least one NAICS code subject to an employee-based size standard	133,958
Small business concerns as % of total business concerns subject to employee-based standards (2019 SAM)	87.9
Average total number of unique Eligible vendors getting Federal contracts [1]—FPDS–NG (2019)	106,230
Average total number of unique firms with employee-based size standards getting Federal contracts [2] —FPDS–NG (2019)	39,714
Average total contract dollars awarded to business concerns, subject to employee-based standards ($ billion)—FPDS–NG (2019)	$232.6
Average total small business contract dollars awarded to businesses subject to employee-based standards ($ billion)—FPDS–NG (2019)	$47.1
Small business dollars as % of total dollars awarded to firms subject to employee-based standards	20.2
Annual average number of 7(a) and 504 loans to businesses subject to employee-based standards (2018–2020)	7,672
Annual average amount of 7(a) and 504 loans ($ billion) (2018–2020)	$4.9
Number of disaster loans to businesses subject to employee-based size standards (2016–2018)	399
Amount of disaster loans ($ billion) (2016–2018)	$0.04

[1] Entities in SAM and FPDS–NG presented above only include business concerns that can be eligible to qualify as small for Federal contracting. That is, entities that can never qualify as small (*e.g.,* foreign, not-for-profit and government entities) are excluded as they are not impacted by this rule.

[2] A business concern could appear in multiple NAICS industries involving both employee-based and size standards and those based on other measures (such as employees). Similarly, a business could be small in some industries and other than small in others.

As mentioned previously, businesses that would regain or lose small business status can be identified by comparing their 24-month employee average with the employee-based size standard. That is, if the 24-month employee average of a firm currently above the size standard is lower than the applicable employee-based size standard, that firm will gain or regain small business status. Similarly, if the 24-month employee average of a currently small business is higher than the size standard, that business will lose its small business status. However, to estimate the number

of small businesses that would benefit by having their small business status extended for a longer period or would be penalized by having their small size status shortened, SBA considered small businesses whose 12-month employee average was within 10 percent below their employee-based size thresholds. Small businesses that are not immediately impacted may be impacted either negatively or positively someday as they continue to grow and approach the size standard threshold.

2. Baseline for Changing the Averaging Period for Receipts From 3 Years to 5 Years

For this new regulatory action modifying an existing regulation (such as changing the average annual receipts calculation from 3 years to 5 years), a baseline assuming no change to the regulation (*i.e.,* maintaining the status quo) generally provides an appropriate benchmark for evaluating benefits, costs, or transfer impacts of proposed regulatory changes and their alternatives.

Based on the 2012 Economic Census special tabulations (the latest available), 2012 County Business Patterns Reports (for industries not covered by the Economic Census), and 2012 Agricultural Census tabulations (for agricultural industries), of a total of about 7.2 million firms in all industries with receipts-based size standards, about 96 percent are considered small and 4 percent other-than-small under the 3-year annual receipts average. Similarly, of 334,990 businesses in SAM 2019 that were subject to at least one receipts-based size standard and eligible to qualify as small business concerns, 87.3 percent were small in at least one NAICS code and 12.7 percent other than small in all NAICS codes.

Based on SBA's internal data on its loan programs, small businesses subject to receipts-based size standards received, on an annual basis, a total of about 50,150 7(a) and 504 loans for fiscal years 2018–2020, totaling nearly $24 billion, of which 85 percent was issued through the 7(a) program and 15 percent was issued through the CDC/504 program. During fiscal years 2016–2018, small businesses in those industries also received about 5,585 loans through the SBA's disaster loan program, totaling about $0.5 billion on an annual basis. Table 12, ''Baseline Analysis of Receipts-Based Size Standards,'' below, provides these baseline results.

Besides financial assistance discussed above, small businesses also benefit through reduced fees, less paperwork, and fewer compliance requirements that are available to small businesses through Federal agencies that use SBA's size standards. However, SBA has no data to estimate the number of small businesses receiving such benefits. Similarly, due to the lack of data, SBA is not able to determine impacts the proposed rule will have on small businesses participating in other agencies' programs that are subject to their own size standards based on average annual receipts.

TABLE 12—BASELINE ANALYSIS OF RECEIPTS-BASED SIZE STANDARDS

Measure	Value
Total industries subject to receipts-based standards	518
Total firms subject to at least one receipts-based standard (million)—2012 Economic Census	7.17
Total small firms subject to at least one receipts-based standard (million)—2012 Economic Census	6.9
Total small firms subject to at least one receipts-based standard as % of total firms—2012 Economic Census	96.2
Total business concerns in SAM [1] (as of September 1, 2019)	403,116
Total business concerns subject to a receipts-based size standard in at least one NAICS code [2] (2019 SAM)	334,990
Total businesses that are small in at least one NAICS code subject to a receipts-based size standard	292,454
Small business concerns as % of total business concerns subject to receipts-based standards (2019 SAM)	87.3
Annual average number of 7(a) and 504 loans to businesses subject to receipts-based standards (2018–2020)	50,153
Annual average amount of 7(a) and 504 loans ($ billion) (2018–2020)	$23.9
Number of disaster loans to businesses subject to receipts-based size standards (2016–2018)	5,585
Amount of disaster loans ($ billion) (2016–2018)	$0.5

[1] Entities in SAM presented above only include business concerns that can be eligible to qualify as small for Federal assistance. That is, entities that can never qualify as small (*e.g.,* foreign, not-for-profit and government entities) are excluded as they are not impacted by this rule.

[2] A business concern could appear in multiple NAICS industries involving both receipts-based size standards and those based on other measures (such as employees). Similarly, a business could be small in some industries and other-than-small in others.

Businesses that would regain or expand their small business status can be identified by comparing the estimate of their 5-year receipts average with the size standard. That is, if the 5-year receipts average of a firm currently above the size standard is lower than the applicable size standard, that firm will gain or regain small business status. To estimate the number of small businesses that would benefit by having their small business status extended for a longer period or would be penalized by having their small business status shortened, SBA considered small businesses whose 3-year average annual receipts was within 10 percent below their receipts-based size thresholds. Depending upon whether their annual receipts are growing or declining, small businesses that are not immediately impacted may be impacted, either positively (*i.e.,* gaining small business status) or negatively (*i.e.,* losing small business status) someday as they continue to grow and approach the size standard threshold as in the current 3-year averaging method. However, SBA is not able to quantify such impacts now.

D. Expansions in Small Business Size Status

1. Expansive Effects of Changing the Averaging Period for Employees From 12 Months to 24 Months

The most significant expansive effects to businesses from the proposed change in the averaging period for calculation of the number of employees for size standards from 12 months to 24 months include: (i) Enabling some mid-size businesses currently categorized above their corresponding size standards to gain or regain small business size status and thereby qualify for participation in Federal assistance intended for small businesses, and (ii) allowing some advanced and larger small businesses close to their size thresholds to lengthen their small business status for a longer period and thereby continue their participation in Federal small business programs. These programs include SBA's business and disaster loan programs and Federal procurement programs intended for small businesses.

Federal procurement programs provide targeted, set-aside opportunities for small businesses under SBA's various business development and contracting programs, including 8(a)/Business Development (BD), HUBZone, Women-Owned Small Business (WOSB), Economically Disadvantaged Women-Owned Small Business (EDWOSB), and Service-Disabled Veteran-Owned Small Business (SDVOSB) programs. Expansive effects accruing to businesses gaining and extending small status are presented below in Table 13, ''Expansive Impacts of Changing the Averaging Period for Employees from 12 Months to 24 Months.'' The results in Table 13 pertain to businesses and industries subject to employee-based size standards only.

As shown in Table 13, of 21,155 firms not currently considered small in any employee-based size standards, 390 (or 1.8 percent) would benefit from the proposed change by gaining or regaining small status under the 24-month employee average in at least one NAICS industry that is subject to an employee-based size standard. Additionally, 373 or 0.3 percent of small businesses within 10 percent below size standards would see their average number of employees decrease under the 24-month averaging period, consequently enabling them to keep their size status for a longer period.

Using the 2012 Economic Census, SBA estimated that about 280 or 1.3 percent of currently large businesses would gain or regain small status and about 1,200 or 0.2 percent of total small businesses would see their small business status extended for a longer period as the result of the change in the calculation of employees. These results are shown in Table 13, below.

With more businesses qualifying as small under the proposed change in the calculation of employees, Federal agencies will have a larger pool of small businesses from which to draw for their small business procurement programs. Growing small businesses that are close to exceeding the current employee-based size standards will be able to retain their small business status for a longer period under the 24-month employee average, thereby enabling them to continue to benefit from the small business programs.

TABLE 13—EXPANSIVE IMPACTS OF CHANGING AVERAGING PERIOD FOR EMPLOYEES FROM 12 MONTHS TO 24 MONTHS

Impact of proposed change	Large firms gaining small status	Small firms extending small status	Total expansive impact
Number of impacted industries	196	184	[1] 260
Number of large firms becoming small or/and small firms extending small status—SAM (as of Sept 1, 2019)	390	373	[2] 757
Large firms becoming small or/and small firms with extended small status as % of total large or/and small firms in the baseline—SAM (as of Sept 1, 2019)	1.8	0.3	0.5
Number of large firms becoming small or/and small firms extending small status—2012 Economic Census	281	1,203	1,484
Large firms becoming small or/and small firms extending small status as % of total large or/and small firms in the baseline—2012 Economic Census	1.3	0.2	0.2
Number of large firms becoming small or/and small firms extending small status for small business contracts—FPDS–NG (2019)	139	83	219
Additional small business dollars available to newly qualified firms or/and current small firms with extended small status ($ million)—FPDS–NG (2019)	$332.7	$90.5	$423.2
Additional small business dollars as % total small business contract dollars in the baseline	0.7	0.2	0.9
Number of additional 7(a) and 504 loans to newly qualified firms or/and current small firms extending small status	1	1	2
Additional 7(a) and 504 loan amount to newly qualified firms or/and current small firms extending small status ($ million)	$0.01	$0.02	$0.03
Additional 7(a) and 504 loan amount as % of total 7(a) and 504 loan amount in the baseline	0.0	0.0	0.001
Number of additional disaster loans to newly qualified firms or/and small firms extending small status	0	0	0
Additional disaster loan amount to newly qualified firms or/and small firms with extended small status ($ million)	$0	$0	$0
Additional disaster loan amount as % of total loan amount in the baseline	0	0	0

[1] Total impact represents total unique industries impacted to avoid double counting as some industries have large firms gaining small status and small firms extending small status.

[2] Total impact represents total unique firms impacted to avoid double counting as some firms may gain small business status in at least one NAICS code, while extending small business status in at least one other NAICS code.

Based on the FPDS–NG data for fiscal year 2019, as shown in Table 13, SBA estimates that those newly qualified small businesses (*i.e.,* large businesses gaining small status) under the proposed rule, if adopted, could receive about $333 million in small business contract dollars annually under SBA's small business, 8(a)/BD, HUBZone, WOSB, EDWOSB, and SDVOSB programs. That represents a 0.7 percent increase to total small business contract dollars from the baseline in Table 11, above. Additionally, small businesses could receive approximately $90 million in additional small business contract dollars because of extension of their small business status, which is about a 0.2 percent increase from the total small business contract dollars in the baseline. That is, businesses gaining or extending small business status could receive about $423 million in additional small business contract dollars, which is a 0.9 percent increase to the total small business dollars in the baseline.

Under SBA's 7(a) and 504 loan programs, based on the data for fiscal years 2018–2020, SBA estimates up to about 1 SBA 7(a) and 504 loans totaling nearly $0.01 million could be made to these newly qualified small businesses under the proposed change. Additionally, small businesses could receive about 1 SBA 7(a) and 504 loans totaling nearly $.02 million due to the extension of their size status. These amounts represent a .001 percent

increases to the 7(a) and 504 loan amount in the baseline.

Newly qualified small businesses and those with extended small business status under the 24-month averaging period may also benefit from the SBA's disaster loan program. However, since the benefit provided through this program is contingent on the occurrence and severity of a disaster in the future, SBA cannot make a meaningful estimate of this impact. Based on the historical trends of the SBA's disaster loan data which shows that firms receiving loans under employee-based size standards are well below the industry size thresholds, SBA estimates that newly defined small businesses and small businesses extending small business status for a longer period would not receive any additional disaster loans under the proposed change.

The added competition from more businesses qualifying as small may result in lower prices to the Federal Government for procurements set aside or reserved for small businesses, but SBA cannot quantify this impact. Costs could be higher when full and open contracts are awarded to HUBZone businesses that receive price evaluation preferences. However, with agencies likely setting aside more contracts for small businesses in response to a larger pool of small businesses under the proposed change, HUBZone firms might actually end up getting more set-aside contracts and fewer full and open contracts, thereby resulting in some cost savings to Federal agencies. While SBA cannot estimate such costs savings, as it is impossible to determine the number and value of unrestricted contracts to be otherwise awarded to HUBZone firms that will be awarded as set-asides, such cost savings are likely to be relatively small as only a small fraction of full and open contracts are awarded to HUBZone businesses.

Additionally, the newly defined small businesses, as well as those with a longer small business status, would also benefit from reduced fees, less paperwork, and fewer compliance requirements but SBA has no data to quantify this impact.

The proposed change will also address some of the challenges and uncertainties small businesses face in the open market once they graduate from their small business status. Small and mid-size businesses experience a considerable disadvantage in competing for full and open contracts against large businesses, including the largest in the industry. These large businesses often have several competitive advantages over small and mid-size firms, including vast past performance qualifications and experience, strong brand-name recognition, a plethora of professional certifications, security clearances, and greater financial and marketing resources. Small and mid-size businesses cannot afford to maintain these resources, leaving them at a considerable disadvantage.

With contracts getting bigger, one large set-aside contract could throw a firm out of its small business size status, thereby subjecting it to certain requirements that apply to other-than-small firms, such as developing subcontracting plans. That firm may not have the infrastructure, existing business processes, and/or other resources in place in order to comply with such requirements. This may also result in constant shuffling between small and other-than-small status.

By allowing smaller mid-size companies that have just exceeded the size threshold to regain small business status and advanced small businesses close to size standards to prolong their small business status for a longer period, this proposed rule can expand the pool of qualified small firms for agencies to draw upon to meet their small business requirements.

2. Expansive Effects of Changing the Averaging Period for Receipts From 3 Years to 5 Years

The most significant benefits to businesses from the change in the period for calculation of average annual receipts from 3 years to 5 years include: (i) Enabling some mid-size businesses currently categorized above their corresponding size standards to gain or regain small business status and thereby qualify for participation in Federal assistance intended for small businesses, including access to SBA's financial assistance and (ii) allowing some advanced and larger small businesses close to their size thresholds to lengthen their small business status for a longer period and thereby continue their participation in SBA's Business Loan, Disaster Loan and SBIC Programs. Benefits accruing to businesses gaining and extending small business status are presented below in Table 14, ''Expansive Impacts of Changing the Averaging Period for Receipts from 3 Years to 5 Years.'' The results in Table 14 pertain to businesses and industries subject to SBA's receipts-based size standards only.

As shown in Table 14, of 42,536 firms not currently considered small in any receipts-based size standards, 3,320 (or 6.4 percent) would benefit from the proposed change by gaining or regaining small business status under the 5-year receipts average in at least one NAICS industry that is subject to a receipts-based size standard. Additionally, nearly 3,600 or 1.2 percent of small businesses within 10 percent below size standards would see their annual receipts decrease under the 5-year averaging period, consequently enabling them to keep their small business status for a longer period.

Using the 2012 Economic Census, SBA estimated that more than 5,900 or 3.3 percent of currently large businesses would gain or regain small business status and more than 61,250 or 0.9 percent of total small businesses would see their small business status extended for a longer period as the result of this proposed rule. These results are shown in Table 14, below.

TABLE 14—EXPANSIVE IMPACTS OF CHANGING THE AVERAGING PERIOD FOR RECEIPTS FROM 3 YEARS TO 5 YEARS

Impact of proposed change	Firms gaining small business status	Firms extending small business status	Total expansive impact
Number of impacted industries	377	382	[1] 447
Number of large firms becoming small or/and small firms extending small business status—SAM (as of Sept 1, 2019)	3,320	3,579	[2] 6,542
Large firms becoming small or/and small firms with extended small business status as % of total large or/and small firms in the baseline—SAM (as of Sept 1, 2019)	6.35	1.22	1.95
Number of large firms becoming small or/and small firms extending small business status—2012 Economic Census	5,938	61,263	67,201
Large firms becoming small or/and small firms extending small business status as % of total large or/and small firms in the baseline—2012 Economic Census	3.3%	0.9%	0.9%

TABLE 14—EXPANSIVE IMPACTS OF CHANGING THE AVERAGING PERIOD FOR RECEIPTS FROM 3 YEARS TO 5 YEARS—Continued

Impact of proposed change	Firms gaining small business status	Firms extending small business status	Total expansive impact
Number of additional 7(a) and 504 loans to newly qualified firms or/and current small firms extending small status	1	4	5
Additional 7(a) and 504 loan amount to newly qualified firms or/and current small firms extending small status ($ million)	$0.2	$1.9	$2.1
Additional 7(a) and 504 loan amount as % of total disaster loan amount in the baseline	0.0	0.0	0.01
Number of additional disaster loans to newly qualified firms or/and small firms extending small status	1	1	2
Additional disaster loan amount to newly qualified firms or/and small firms with extended small status ($ million)	$0.00	$0.01	$0.01
Additional disaster loan amount as % of total loan amount in the baseline	0.0	0.0	0.002

[1] Total impact represents total unique industries impacted to avoid double counting as some industries have large firms gaining small business status and small firms extending small business status.

[2] Total impact represents total unique firms impacted to avoid double counting as some firms may gain small business status in at least one NAICS code, while extending small business status in at least one other NAICS code.

Growing small businesses that are close to exceeding the current size standards will be able to retain their small business status for a longer period under the 5-year receipts average, thereby enabling them to continue to benefit from the small business programs.

Under SBA's 7(a) and 504 loan programs, based on the data for fiscal years 2018–2020, SBA estimates that about 1 SBA 7(a) and 504 loans totaling $0.2 million could be made to these newly qualified small businesses under the proposed change. Additionally, small businesses could receive up to 4 SBA 7(a) and 504 loans totaling $1.9 million due to the expansion of their size status. Together, these amounts represent a 0.01 percent increase to the loan amount in the baseline.

Newly qualified small businesses and those with extended small business status will also benefit from the SBA's disaster loan program. Since the benefit provided through this program is contingent on the occurrence and severity of a disaster in the future, SBA cannot make a meaningful estimate of this impact. However, based on the historical trends of the SBA disaster loan data, SBA estimates that, on an annual basis, the newly defined small businesses under the proposed change could receive about 1 disaster loan, totaling about $0.003 million. Similarly, extending small business status for a longer period could result in small businesses receiving 1 disaster loans, totaling about $0.01 million. These results are presented in Table 14, above.

Additionally, the newly defined small businesses, as well as those with a longer small business status, would also benefit from reduced fees, less paperwork, and fewer compliance requirements but SBA has no data to quantify this impact.

E. Contractions in Eligibility for Small Business Status

1. Contractive Effects of Changing the Averaging Period for Employees From 12 Months to 24 Months

As stated previously, the change enacted under Public Law 116–283 may not always and necessarily benefit every small business concern. When businesses' monthly employees are declining or when the number of employees for the latest 12 months are lower than those for the earliest 12 months of the 24-month averaging period, the 24-month employee average would be higher than the 12-month average, thereby ejecting small businesses out of their small status sooner or rendering some small businesses other than small immediately. Such small businesses would no longer be eligible for Federal small business opportunities, such as SBA's loans, Federal small business contracts, and other Federal assistance available to small businesses. These impacts are provided in Table 15, ''Contractive Impacts from Changing the Averaging Period for Employees from 12 Months to 24 Months,'' below.

SBA estimates that, of 133,958 firms in 2019 SAM that were small under at least one employee-based size standard based on the 12-month employee average, 260 firms (or 0.2 percent) would lose their small status and another 100 firms (or 0.08 percent) would see their size status shortened as a result of the proposed change. Similarly, based on the 2012 Economic Census data, 763 firms would lose their small business status and 287 firms would see their size status shortened, which represent, respectively, 0.1 percent and 0.04 percent of total small firms subject to an employee-based size standard.

TABLE 15—CONTRACTIVE IMPACTS FROM CHANGING THE AVERAGING PERIOD FOR EMPLOYEES FROM 12 MONTHS TO 24 MONTHS

Impact of proposed change	Small firms losing small status	Small firms shortening small status	Total contractive impact
Number of industries impacted	190	64	[1] 211
Number of small firms losing or/and shortening small status—SAM (as of Sept 1, 2019)	260	101	[2] 361
Small firms losing or shortening small status as % of total small firms—SAM (as of Sept 1, 2019)	0.2	0.08	0.3
Number of small firms losing or extending small status—2012 Economic Census	763	287	1,050

TABLE 15—CONTRACTIVE IMPACTS FROM CHANGING THE AVERAGING PERIOD FOR EMPLOYEES FROM 12 MONTHS TO 24 MONTHS—Continued

Impact of proposed change	Small firms losing small status	Small firms shortening small status	Total contractive impact
Small firms losing or shortening small status as % of total small firms in the baseline—2012 Economic Census	0.1	0.04	0.2
Number of small firms losing or shortening small business eligibility for set-aside contracts—FPDS–NG (2019)	178	20	197
Small business dollars unavailable to small firms losing or shortening small status ($ million)—FPDS–NG (2019)	$197.1	$68.7	$265.8
Small business dollars as % of total small business dollars in the baseline	0.42	0.15	0.56
Number of 7(a) and 504 loans unavailable to small firms losing or shortening small status	1	1	2
7(a) and 504 loan amount unavailable to small firms losing or shortening ($ million)	$0.01	$0.01	$0.02
Unavailable 7(a) and 504 loan amount as % of total loan amount in the baseline (baseline = $24.5 billion)	0.0	0.0	0.0
Number of disaster loans unavailable to small firms losing or shortening small status	0.0	0.0	0.0
Unavailable disaster loan amount to small firms losing or extending small status ($ million)	$0.0	$0.0	$0.0
Unavailable disaster loan amount as % of total disaster loan amount in the baseline (baseline = $1.0 billion)	0.0	0.0	0.0

[1] Total impact represents total unique industries impacted to avoid double counting as some industries have small firms losing small status and small firms shortening small status.

[2] Total impact represents total unique firms impacted to avoid double counting as some firms may gain small business status in at least one NAICS code, while extending small business status in at least one other NAICS code.

Based on the contract awards data from FPDS–NG for fiscal year 2019, businesses losing or shortening small status would lose access to about $266 million in Federal small business contract collars, which is about a 0.6 percent decrease from the corresponding value in the baseline. Similarly, based on the SBA's loan data for fiscal years 2018–2020 and the number of impacted firms from the Economic Census, SBA estimates that businesses losing or shortening small business status would also lose access to about $0.02 million in SBA 7(a) and 504 loans. Based on the historical trends of the SBA's disaster loan data which shows that firms receiving loans under employee-based size standards are well below the industry size thresholds, SBA estimates that businesses losing or shortening small business status would not lose access to any additional disaster loans under the proposed change.

Businesses losing small status and those with size status shortened would also be deprived of other Federal benefits available, including reduced fees and exemptions from certain paperwork and compliance requirements. However, there exists no data to quantify this impact.

Additionally, by enabling mid-size businesses to regain small business status and lengthening the small business status of advanced and successful larger small businesses, the proposed rule may disadvantage smaller small businesses in more need of Federal assistance than their larger counterparts in competing for Federal opportunities. SBA frequently receives concerns from smaller small businesses that they lack resources, past performance qualifications and expertise to be able to compete against more resourceful, qualified and experienced large small businesses for Federal opportunities for small businesses.

Besides having to register in SAM to be able to participate in Federal contracting and update the SAM profile annually, small businesses incur no direct costs to gain or retain their small business status. All businesses willing to do business with the Federal Government have to register in SAM and update their SAM profiles annually, regardless of their size status. SBA believes that a vast majority of businesses that are willing to participate in Federal contracting are already registered in SAM. Furthermore, this proposed rule does not establish the new size standards for the first time; rather, it merely proposes to modify the calculation of annual average receipts that apply to the existing size standards in accordance with a statutory requirement.

The proposed change may entail some additional administrative costs to the Federal Government because more businesses may qualify as small for Federal small business programs. For example, there will be more firms seeking SBA's loans; more firms eligible for enrollment in the Dynamic Small Business Search (DSBS) database or in *certify.sba.gov;* more firms seeking certification as 8(a)/BD or HUBZone firms or qualifying for small business, WOSB, EDWOSB, and SDVOSB status; and more firms applying for SBA's 8(a)/BD and Mentor-Protégé programs. With an expanded pool of small businesses, it is likely that Federal agencies will set aside more contracts for small businesses under the proposed change. One may surmise that this might result in a higher number of small business size protests and additional processing costs to agencies. However, the SBA's historical data on size protests actually show that the number of size protests actually decreased after an increase in the number of businesses qualifying as small as a result of size standards revisions as part of the first 5-year review of size standards. Specifically, on an annual basis, the number of size protests dropped from about 600 during fiscal years 2011–2013 (review of most receipts-based size standards was completed by the end of fiscal year 2013) to less than 500 during fiscal years 2017–2019. However, with more months of the data to be reviewed, 24-month averaging may increase time needed by size specialists to process a size protest. Among those newly defined small businesses seeking SBA's loans, there could be some additional costs associated with compliance and verification of their small business status. However, small business lenders have an option of using the tangible net worth and net income based alternative size standard instead of using the industry-based size standard to establish eligibility for SBA's loans. For these

reasons, SBA believes that these added administrative costs will be minor because necessary mechanisms are already in place to handle these added requirements.

Additionally, some Federal contracts may possibly have higher costs. With a greater number of businesses defined as small under the proposed change, Federal agencies may choose to set aside more contracts for competition among small businesses only instead of using full and open competition. The movement of contracts from unrestricted competition to small business set-aside contracts might result in competition among fewer total bidders, although there will be more small businesses eligible to submit offers under the proposed change. However, the additional costs associated with fewer bidders are expected to be minor since, by law, procurements may be set aside for small businesses under the 8(a)/BD, HUBZone, WOSB, EDWOSB, or SDVOSB programs only if awards are expected to be made at fair and reasonable prices.

Costs may also be higher when full and open contracts are awarded to HUBZone businesses that receive price evaluation preferences. However, with agencies likely setting aside more contracts for small businesses in response to the availability of a larger pool of small businesses under the proposed change to the averaging period for employees from 12 months to 24 months, HUBZone firms might actually end up getting fewer full and open contracts, thereby resulting in some cost savings to agencies. However, such cost savings are likely to be minimal as only a small fraction of unrestricted contracts are awarded to HUBZone businesses.

2. Contractive Effects of Changing the Averaging Period for Receipts From 3 Years to 5 Years

As stated previously, the change enacted under Public Law 115–324 may not always and necessarily benefit every small business concern. When businesses' annual revenues are declining or when annual revenues for the latest 3 years are lower than those for the earliest 2 years of the 5-year period, the 5-year average would be higher than the 3-year average, thereby ejecting small businesses out of their small business status sooner or rendering some small businesses other than small immediately. Similarly, small businesses that lose their small business status would have to wait longer to qualify as small again. Such small businesses would no longer be eligible for Federal small business opportunities, such as Federal small business contracts, SBA loan programs and other Federal benefits (such as reduced fees and exemptions from certain paperwork and compliance requirements) available to small businesses. However, the SBA's proposal to allow businesses applying for its Business Loan, Disaster Loan and SBIC Programs to elect to use either the 3-year receipts average or the 5-year receipts average will mitigate such impacts. Moreover, the change in the averaging period for receipts in this proposed rule only applies to businesses in the SBA Business Loan, Disaster Loan, and SBIC Programs. In other words, the change in the calculation of average annual receipts in this proposed rule will have no impacts on businesses participating in Federal procurement and all other non-procurement programs except SBA loan programs.

By enabling mid-size businesses to regain small business status and lengthening the small business status of advanced and successful larger small businesses, the proposed rule may disadvantage smaller small businesses in more need of Federal assistance than their larger counterparts in competing for Federal opportunities. SBA frequently receives concerns from smaller small businesses that they lack resources, past performance qualifications and expertise to be able to compete against more resourceful, qualified and experienced larger small businesses for Federal opportunities for small businesses. SBA believes that overall benefits to small businesses from this proposed rule change outweigh the costs to small businesses.

F. Net Impact

1. Net Impact of Changing the Averaging Period for Employees From 12 Months to 24 Months

As discussed elsewhere, the proposed change in averaging period for employees would result in four primary impacts, which can be categorized as either having a 'expansive impact' or 'contractive impact' on size status of both currently large and small businesses. Allowing some currently large firms to gain small business status and some advanced small firms to remain small for a longer period represents the expansive impact of the proposed rule. Causing some currently small firms to lose or shorten their small business is the contractive impact.

Although businesses in a majority of industries with employee-based size standards would be both positively and negatively impacted by this proposed rule, in totality the number of firms with expansive impacts was generally greater than the number of firms with contractive impacts. The proposed rule would result in a net gain of about $158 million (or 0.3 percent increase from the baseline) in Federal small business contract dollars. The net impact of the proposed rule on SBA loans was also positive, but very small. Specifically, SBA estimates a net gain of $0.01 million in 7(a) and 504 loans and no change in disaster loans to small firms as a result of changing the period for calculating the average number of employees for size standards from 12 months to 24 months. Net impacts of the proposed rule are summarized in Table 16, ''Net Impact from Changing the Averaging Period for Employees from 12 Months to 24 Months,'' below.

TABLE 16—NET IMPACT FROM CHANGING THE AVERAGING PERIOD FOR EMPLOYEES FROM 12 MONTHS TO 24 MONTHS

Impact of proposed change	Total expansive impact	Total contractive impact	Net impact
Total number of impacted firms—SAM (as of Sept 1, 2019)	757	361	396
Impacted firms as % of total firms in the baseline—SAM (as of Sept 1, 2019)	0.5	0.2	0.3
Number of impacted firms—2012 Economic Census	1,484	1,050	435
Impacted firms as % of total firms in the baseline—2012 Economic Census	0.2	0.2	0.1
Number of impacted firms eligible for set-aside contracts (FPDS–NG)	219	197	22
Small business dollars impacted ($ million)	$423.2	$265.8	$157.8
Small business dollars impacted as % total set-aside dollars in the baseline	0.9	0.6	0.3
Number of 7(a) and 504 loans impacted	2	2	0
7(a) and 504 loan amount impacted ($ million)	$0.03	$0.02	$0.01
7(a) and 504 loan amount impacted as % of total 7(a) and 504 loan amount in the baseline	0.0	0.0	0.0

TABLE 16—NET IMPACT FROM CHANGING THE AVERAGING PERIOD FOR EMPLOYEES FROM 12 MONTHS TO 24 MONTHS—Continued

Impact of proposed change	Total expansive impact	Total contractive impact	Net impact
Number of disaster loans impacted	0	0	0
Disaster loan amount impacted ($ million)	$0.0	$0.0	$0.0
Disaster loan amount impacted as % of total disaster loan amount in the baseline	0.0	0.0	0.0

2. Net Impact of Changing the Averaging Period for Receipts From 3 Years to 5 Years

Under the SBA's proposal allowing businesses to elect to choose either a 3-year receipts average or a 5-year receipts average to establish small business eligibility for its Business Loan, Disaster Loan, and SBIC Programs, none of the currently eligible small businesses will experience a contractive impact from the proposed change. In other words, the proposed change will not cause any currently small businesses to lose or shorten their small business status. The proposed change will enable some mid-size businesses above the size standard gain or regain small business status and some advanced small businesses close to the size standard to lengthen their small status. In the absence of contractive impacts, the expansive impacts shown in Table 14 (above) will also represent as net impacts of the proposed change.

G. Transfer Impacts

1. Transfer Impacts of Changing the Averaging Period for Employees From 12 Months to 24 Months

The proposed change may result in some redistribution of Federal contracts between businesses gaining or extending small status and large businesses, and between businesses gaining or extending small status and other existing small businesses. However, it would have no impact on the overall economic activity since the total Federal contract dollars available for businesses to compete for will not change. While SBA cannot quantify with certainty the actual outcome of the gains and losses from the redistribution of contracts among different groups of businesses, it can identify several probable impacts in qualitative terms. With the availability of a larger pool of small businesses under the proposed change, some unrestricted Federal contracts may be set aside for small businesses. As a result, large businesses may lose access to some Federal contracts. Similarly, some currently small businesses may obtain fewer set-aside contracts due to the increased competition from some large businesses qualifying as small and advanced small businesses remaining small for a longer period. This impact may be offset by a greater number of procurements being set aside for all small businesses. With large businesses qualifying as small and advanced larger small businesses remaining small for a longer period under the proposed rule, smaller small businesses could face some disadvantages in competing for set-aside contracts against their larger counterparts. However, SBA cannot quantify these impacts.

2. Transfer Impacts of Changing the Averaging Period for Receipts From 3 Years to 5 Years

The change from a 3-year averaging period to a 5-year averaging period may result in some redistribution of Federal contracts between businesses gaining or extending small business status and large businesses, and between businesses gaining or extending small business status and other existing small businesses. However, since the change in calculation of receipts in this proposed rule does not apply to Federal contracting, these distributional impacts are not relevant for changing the averaging period for receipts from 3 years to 5 years.

Executive Order 12988

This action meets applicable standards set forth in sections 3(a) and 3(b)(2) of Executive Order 12988, Civil Justice Reform, to minimize litigation, eliminate ambiguity, and reduce burden. This action does not have retroactive or preemptive effect.

Executive Order 13132

For purposes of Executive Order 13132, SBA has determined that this proposed rule will not have substantial, direct effects on the States, on the relationship between the National Government and the States, or on the distribution of power and responsibilities among the various levels of government. Therefore, SBA has determined that this final rule has no federalism implications warranting preparation of a federalism assessment.

Executive Order 13563

Executive Order 13563 emphasizes the importance of quantifying both costs and benefits, reducing costs, harmonizing rules, and promoting flexibility. A description of the need for this regulatory action and benefits and costs associated with this action, including possible distributional impacts that relate to Executive Order 13563, is included above in the Benefit-Cost Analysis under Executive Order 12866. Additionally, Executive Order 13563, Section 6, calls for retrospective analyses of existing rules.

Following the enactment of Public Law 115–324, SBA issued a public notice advising business and contracting communities that SBA must go through a rulemaking process to implement the new law and that businesses still must report their receipts based on a 3-year average until SBA changes its regulations. SBA updated the Small Business Procurement Advisory Council (SBPAC) at its March 26, 2019, April 23, 2019, and August 26, 2019, meetings about SBA's rulemaking process to implement Public Law 115–324. On April 18, 2019, SBA also presented an update on the implementation of Public Law 115–324 at the 2019 Annual Government Procurement Conference. Through phone calls and emails, SBA also advised business and contracting communities and other interested parties about the SBA's process to implement the new law.

Regulatory Flexibility Act (Initial Regulatory Flexibility Analysis)

Under the Regulatory Flexibility Act (RFA), this proposed rule may have a significant economic impact on a substantial number of small businesses in industries subject to both employee-based and receipts-based size standards. As described above, this rule may affect small businesses in those industries seeking assistance under Federal small business programs. Specifically, the change in the averaging period for calculating the number employees for size standards from 12 months to 24 months may have a significant impact on a substantial number of businesses in industries subject to employee based

size standards in terms of qualifying for Federal small business programs, including Federal contracts set aside for small businesses and SBA's loan programs. Similarly, the proposed change in the averaging period for receipts from 3 years to 5 years will also impact a substantial number of businesses in the SBA Business Loan, Disaster Loan, and SBIC programs.

Immediately below, SBA sets forth an initial regulatory flexibility analysis (IRFA) of proposed rule to address the following questions: (1) What is the need for and objective of the rule?; (2) What is SBA's description and estimate of the number of small businesses to which the rule will apply?; (3) What are the projected reporting, record-keeping, and other compliance requirements of the rule?; (4) What are the relevant Federal rules that may duplicate, overlap, or conflict with the rule?; and (5) What alternatives will allow the Agency to accomplish its regulatory objectives while minimizing the impact on small businesses?

1. What is the need for and objective of the rule?

First, section 863 of the NDAA 2021, Public Law 116–283, changed the averaging period for SBA's employee-based size standards from 12 months to 24 months. The intent of this proposed rule is to implement Public Law 116–283 by amending 13 CFR 121.106 such that a concern would average its employees over all pay periods in the preceding completed 24 months. Second, in 2018, Public Law 115–324 amended section 3(a)(2)(C)(ii)(II) of the Small Business Act by modifying the period for calculating average annual receipts for prescribing size standards for business concerns in services industries by an agency without separate statutory authority to issue size standards from 3 years to 5 years. In a final rule published December 5, 2019 (84 FR 66561), SBA implemented Public Law 115–324 by making changes to its receipts-based size standards for all SBA programs except the Business Loan and Disaster Loan Programs. This proposed rule would extend the changes to SBA's receipts-based size standards for the Business Loan, Disaster Loan, and SBIC Programs.

2. What are SBA's description and estimate of the number of small businesses to which the rule will apply?

This proposed rule applies to all small businesses that are subject to either an employee-based or a receipts-based size standard. Based on the 2012 Economic Census special tabulations, 2012 County Business Patterns Reports, and 2012 Agricultural Census tabulations, of a total of 680,266 firms in all industries with employee-based size standards to which this proposed rule will apply, 657,942 or about 96.7 percent are considered small under the 12-month employee average. Of 152,450 total concerns in SAM 2019 to which an employee-based size standard will apply, about 133,958 or 87.9 percent were small in at least one NAICS industry with an employee-based size standard. Similarly, based on the data from FPDS–NG for fiscal year 2019, about 39,700 unique firms in industries subject to employee-based size standards received at least one Federal contract in 2019, of which 85.3 percent, or 33,867 were small.

Based on the same data sources listed above, of a total of 7.2 million firms in all industries with receipts-based size standards to which this final rule will apply, 6.9 million or about 96 percent are considered small under the 3-years receipts average. Of 334,990 total concerns in SAM 2019 to which a receipts-based size standard will apply, 292,454 or 87.3 percent were small in at least one NAICS industry with a receipts-based size standard.

3. What are the projected reporting, record-keeping and other compliance requirements of the rule?

The proposed rule changes existing reporting or record-keeping requirements for small businesses. To qualify for Federal procurement and a few other programs, businesses are required to register in SAM and to self-certify that they are small at least once annually. Therefore, businesses opting to participate in those programs must comply with SAM requirements. There are no costs associated with SAM registration or certification. The change in the calculation of employees from a 12-month averaging period to a 24-month averaging period may result in some redistribution of Federal contracts between businesses gaining or extending small status and large businesses, and between businesses gaining or extending small status and other existing small businesses. However, it would have no impact on the overall economic activity since the total Federal contract dollars available for businesses to compete for will not change. Since the change in the calculation of annual average receipts in this proposed rule only applies to SBA loan programs, this will have no impact on Federal contracting and associated record-keeping requirements.

4. What are the relevant Federal rules which may duplicate, overlap or conflict with the rule?

Under section 3(a)(2)(C) of the Small Business Act, 15 U.S.C. 632(a)(2)(C), Federal agencies must use SBA's size standards to define a small business, unless specifically authorized by statute to do otherwise. In 1995, SBA published in the **Federal Register** a list of statutory and regulatory size standards that identified the application of SBA's size standards as well as other size standards used by Federal agencies (60 FR 57988 (November 24, 1995)). SBA is not aware of any Federal rule that would duplicate or conflict with establishing size standards.

However, the Small Business Act and SBA's regulations allow Federal agencies to develop different size standards if they believe that SBA's size standards are not appropriate for their programs, with the approval of SBA's Administrator (13 CFR 121.903). The Regulatory Flexibility Act, 5 U.S.C. 601(3), authorizes an Agency to establish an alternative small business definition, after consultation with the Office of Advocacy of the U.S. Small Business Administration.

5. What alternatives will allow the Agency to accomplish its regulatory objectives while minimizing the impact on small entities?

By law, SBA is required to develop numerical size standards for establishing eligibility for Federal small business assistance programs. Other than varying size standards by industry and changing the size measures or changing a measurement period, no practical alternative exists to the systems of numerical size standards. As stated elsewhere, the objective of this final rule is to change SBA's regulations on the calculation of business size in terms of average number of employees to implement Public Law 116–283 for all SBA programs and average annual receipts to implement Public Law 115–324 for the SBA's Business Loan, Disaster Loan and SBIC programs.

This rule is expected to affect a substantial number of small entities, but the effects are not expected to be significant. However, to mitigate any unintended negative impacts of a 5-year averaging period on small businesses and to allow small businesses to continue to use the 3-year receipts average, in this proposed rule, SBA is allowing applicants in Business Loan, Disaster Loan and SBIC programs to elect to calculate average annual receipts using either a 3-year averaging period or a 5-year averaging period.

Paperwork Reduction Act

For purposes of the Paperwork Reduction Act, 44 U.S.C. Chapter 35, SBA has determined that this proposed rule would amend an information collection (SBA Form 355, Information for Small Business Size Determination, OMB Control Number 3245–0101). SBA will revise Instruction No. 5 to specify that respondents will use a 24-month average to calculate number of employees. In Part II, question 10, respondents will then provide an average number of employees over 24 months.

Concurrently with publication of this proposed rule, SBA is submitting to OMB an Information Collection Review based on the changes described above. SBA has determined that the changes to the Form 355 will not impact the paperwork burden, and it will remain at 4 hours.

SBA will revise the SBA Form 480, *Size Status Declaration,* for SBIC applicants. The form would reflect the change to the 24-month average for applicants using an employee-based size standard, and the change to an election between a 3-year average and a 5-year average for applicants using a receipts-based size standard. The metrics for the alternative size standard for SBIC applicants would not change.

SBA will revise Part M (Size Analysis) of SBA Form 1920 (7(a) Lender Application), OMB Control No.: 3245–0348, and Exhibit 4 of SBA Form 1244 (504 Loan Application), OMB Control No.: 3245–0071. The revisions would reflect the change to an election between a 3-year average or a 5-year average for applicants using a receipts-based size standard. The metrics for the alternative size standard for 7(a) and 504 applicants would not change.

List of Subjects in 13 CFR Part 121

Administrative practice and procedure, Government procurement, Government property, Grant programs—business, Individuals with disabilities, Loan programs—business, Reporting and recordkeeping requirements, Small businesses.

For the reasons set forth in the preamble, SBA proposes to amend 13 CFR part 121 as follows:

PART 121—SMALL BUSINESS SIZE REGULATIONS

■ 1. The authority citation for part 121 continues to read as follows:

Authority: 15 U.S.C. 632, 634(b)(6), 636(a)(36), 662, and 694a(9); Pub. L. 116–136, Section 1114.

■ 2. In § 121.104, revise the first sentence of paragraph (c)(1) and paragraphs (c)(2) through (4) to read as follows:

§ 121.104 How does SBA calculate annual receipts?

* * * * *

(c) *Period of measurement.* (1) Except for the Business Loan, Disaster Loan, and Small Business Investment Company (SBIC) Programs, annual receipts of a concern that has been in business for 5 or more completed fiscal years means the total receipts of the concern over its most recently completed 5 fiscal years divided by 5.

* * *

(2) Except for the Business Loan, Disaster Loan Programs, and SBIC Programs, annual receipts of a concern which has been in business for less than 5 complete fiscal years means the total receipts for the period the concern has been in business divided by the number of weeks in business, multiplied by 52.

(3) Except for the Business Loan, Disaster Loan, and SBIC Programs, where a concern has been in business 5 or more complete fiscal years but has a short year as one of the years within its period of measurement, annual receipts means the total receipts for the short year and the 4 full fiscal years divided by the total number of weeks in the short year and the 4 full fiscal years, multiplied by 52.

(4) For the Business Loan, Disaster Loan, and SBIC Programs, a concern that has been in business for three or more completed fiscal years may elect to calculate annual receipts using either the total receipts of the concern over its most recently completed 5 fiscal years divided by 5, or the total receipts of the concern over its most recently completed 3 fiscal years divided by 3. Annual receipts of a concern which has been in business for less than three complete fiscal years means the total receipts for the period the concern has been in business divided by the number of weeks in business, multiplied by 52. Where a concern has been in business three or more complete fiscal years but has a short year as one of the years within its period of measurement, annual receipts means the total receipts for the short year and the two full fiscal years divided by the total number of weeks in the short year and the two full fiscal years, multiplied by 52. For the purposes of this subsection, the Business Loan Programs consist of the 7(a) Loan Program, the Microloan Program, the Intermediary Lending Pilot Program, and the Development Company Loan Program (''504 Loan Program''). The Disaster Loan Programs consist of Physical Disaster Business Loans, Economic Injury Disaster Loans, Military Reservist Economic Injury Disaster Loans, and Immediate Disaster Assistance Program loans.

* * * * *

■ 3. In § 121.106, revise paragraphs (b)(1) and (3) to read as follows:

§ 121.106 How does SBA calculate number of employees?

* * * * *

(b) * * *

(1) The average number of employees of the concern is used (including the employees of its domestic and foreign affiliates) based upon numbers of employees for each of the pay periods for the preceding completed 24 calendar months.

* * * * *

(3) If a concern has not been in business for 24 months, the average number of employees is used for each of the pay periods during which it has been in business.

* * * * *

■ 4. In § 121.903, revise paragraph (a)(1)(i) to read as follows:

§ 121.903 How may an agency use size standards for its programs that are different than those established by SBA?

(a) * * *

(1) * * *

(i) The size of a manufacturing concern by its average number of employees based on the preceding 24 calendar months, determined according to § 121.106;

* * * * *

Isabella Casillas Guzman,

Administrator.

[FR Doc. 2021–23439 Filed 11–1–21; 8:45 am]

BILLING CODE 8026–03–P

DEPARTMENT OF TRANSPORTATION

Federal Aviation Administration

14 CFR Part 71

[Docket No. FAA–2021–0849; Airspace Docket No. 21–ACE–17]

RIN 2120–AA66

Proposed Amendment of VOR Federal Airways V–161, V–190, and V–307, and Revocation of VOR Federal Airway V–516 in the Vicinity of Oswego, KS

AGENCY: Federal Aviation Administration (FAA), DOT.

ACTION: Notice of proposed rulemaking (NPRM).

SUMMARY: This action proposes to amend VHF Omnidirectional Range

(VOR) Federal airways V–161, V–190, and V–307, and revoke V–516. The FAA is proposing this action due to the planned decommissioning of the VOR portion of the Oswego, KS, VOR/Distance Measuring Equipment (VOR/DME) navigational aid (NAVAID). The Oswego VOR is being decommissioned in support of the FAA's VOR Minimum Operational Network (MON) program.

DATES: Comments must be received on or before December 17, 2021.

ADDRESSES: Send comments on this proposal to the U.S. Department of Transportation, Docket Operations, 1200 New Jersey Avenue SE, West Building Ground Floor, Room W12–140, Washington, DC 20590; telephone: 1(800) 647–5527, or (202) 366–9826. You must identify FAA Docket No. FAA–2021–0849; Airspace Docket No. 21–ACE–17 at the beginning of your comments. You may also submit comments through the internet at *https://www.regulations.gov.*

FAA Order JO 7400.11F, Airspace Designations and Reporting Points, and subsequent amendments can be viewed online at *https://www.faa.gov/air_traffic/publications/.* For further information, you can contact the Rules and Regulations Group, Federal Aviation Administration, 800 Independence Avenue SW, Washington, DC 20591; telephone: (202) 267–8783. FAA Order JO 7400.11F is also available for inspection at the National Archives and Records Administration (NARA). For information on the availability of FAA Order JO 7400.11F at NARA, email: *fr.inspection@nara.gov* or go to *https://www.archives.gov/federal-register/cfr/ibr-locations.html.*

FOR FURTHER INFORMATION CONTACT: Colby Abbott, Rules and Regulations Group, Office of Policy, Federal Aviation Administration, 800 Independence Avenue SW, Washington, DC 20591; telephone: (202) 267–8783.

SUPPLEMENTARY INFORMATION:

Authority for This Rulemaking

The FAA's authority to issue rules regarding aviation safety is found in Title 49 of the United States Code. Subtitle I, Section 106 describes the authority of the FAA Administrator. Subtitle VII, Aviation Programs, describes in more detail the scope of the agency's authority. This rulemaking is promulgated under the authority described in Subtitle VII, Part A, Subpart I, Section 40103. Under that section, the FAA is charged with prescribing regulations to assign the use of the airspace necessary to ensure the safety of aircraft and the efficient use of airspace. This regulation is within the scope of that authority as it would modify the National Airspace System as necessary to preserve the safe and efficient flow of air traffic.

Comments Invited

Interested parties are invited to participate in this proposed rulemaking by submitting such written data, views, or arguments as they may desire. Comments that provide the factual basis supporting the views and suggestions presented are particularly helpful in developing reasoned regulatory decisions on the proposal. Comments are specifically invited on the overall regulatory, aeronautical, economic, environmental, and energy-related aspects of the proposal.

Communications should identify both docket numbers (FAA Docket No. FAA–2021–0849; Airspace Docket No. 21–ACE–17) and be submitted in triplicate to the Docket Management Facility (see the **ADDRESSES** section for address and phone number). You may also submit comments through the internet at *https://www.regulations.gov.*

Commenters wishing the FAA to acknowledge receipt of their comments on this action must submit with those comments a self-addressed, stamped postcard on which the following statement is made: ''Comments to FAA Docket No. FAA–2021–0849; Airspace Docket No. 21–ACE–17.'' The postcard will be date/time stamped and returned to the commenter.

All communications received on or before the specified comment closing date will be considered before taking action on the proposed rule. The proposal contained in this action may be changed in light of comments received. All comments submitted will be available for examination in the public docket both before and after the comment closing date. A report summarizing each substantive public contact with FAA personnel concerned with this rulemaking will be filed in the docket.

Availability of NPRMs

An electronic copy of this document may be downloaded through the internet at *https://www.regulations.gov.* Recently published rulemaking documents can also be accessed through the FAA's web page at *https://www.faa.gov/air_traffic/publications/airspace_amendments/.*

You may review the public docket containing the proposal, any comments received and any final disposition in person in the Dockets Office (see the **ADDRESSES** section for address and phone number) between 9:00 a.m. and 5:00 p.m., Monday through Friday, except Federal holidays. An informal docket may also be examined during normal business hours at the office of the Operations Support Group, Central Service Center, Federal Aviation Administration, 10101 Hillwood Parkway, Fort Worth, TX 76177.

Availability and Summary of Documents for Incorporation by Reference

This document proposes to amend FAA Order JO 7400.11F, Airspace Designations and Reporting Points, dated August 10, 2021, and effective September 15, 2021. FAA Order JO 7400.11F is publicly available as listed in the **ADDRESSES** section of this document. FAA Order JO 7400.11F lists Class A, B, C, D, and E airspace areas, air traffic service routes, and reporting points.

Background

The FAA is planning to decommission the Oswego, KS, VOR in July 2022. The Oswego VOR was one of the candidate VORs identified for discontinuance by the FAA's VOR MON program and listed in the Final policy statement notice, ''Provision of Navigation Services for the Next Generation Air Transportation System (NextGen) Transition to Performance-Based Navigation (PBN) (Plan for Establishing a VOR Minimum Operational Network),'' published in the **Federal Register** of July 26, 2016 (81 FR 48694), Docket No. FAA–2011–1082.

Although the VOR portion of the Oswego VOR/DME is planned for decommissioning, the co-located Distance Measuring Equipment (DME) is being retained to support NextGen PBN flight procedure requirements.

The VOR Federal airways effected by the Oswego VOR decommissioning are V–161, V–190, V–307, and V–516. With the planned decommissioning of the Oswego VOR, the remaining ground-based NAVAID coverage in the area is insufficient to enable the continuity of the affected airways. As such, proposed modifications to V–161 and V–307 would result in gaps in the airways and to V–190 would result in the airway being shortened, as well as the proposed revocation of V–516 in its entirety. To overcome the proposed modifications and revocation to the affected airways, instrument flight rules (IFR) traffic could use portions of adjacent VOR Federal airways, including V–63, V–73, V–88, V–131, V–132, V–140, and V–350, or receive air traffic control (ATC) radar vectors to fly around or through the affected area. Additionally, IFR pilots equipped with RNAV capabilities could also navigate point to point using the

existing fixes that would remain in place to support continued operations though the affected area. Visual flight rules (VFR) pilots who elect to navigate via the affected ATS routes could also take advantage of the adjacent ATS routes or ATC services listed previously.

The Proposal

The FAA is proposing an amendment to 14 CFR part 71 to amend VOR Federal airways V–161, V–190, and V–307, and remove VOR Federal airway V–516 due to the planned decommissioning of the Oswego, KS, VOR. The proposed VOR Federal airway actions are described below.

V–161: V–161 currently extends between the Three Rivers, TX, VOR/Tactical Air Navigation (VORTAC) and the Gopher, MN, VORTAC; and between the International Falls, MN, VOR/DME and the Winnipeg, MB, Canada, VORTAC, excluding the airspace within Canada. The FAA proposes to remove the airway segment overlying the Oswego, KS, VOR/DME between the Tulsa, OK, VORTAC and Butler, MO, VORTAC. The unaffected portions of the existing airway would remain as charted.

V–190: V–190 currently extends between the Phoenix, AZ, VORTAC and the Springfield, MO, VORTAC. The FAA proposes to remove the airway segment overlying the Oswego, KS, VOR/DME between the Bartlesville, OK, VOR/DME and Springfield, MO, VORTAC. The unaffected portions of the existing airway would remain as charted.

V–307: V–307 currently extends between the Harrison, AR, VOR/DME and the Omaha, IA, VORTAC. The FAA proposes to remove the airway segment overlying the Oswego, KS, VOR/DME between the Neosho, MO, VOR/DME and Chanute, KS, VOR/DME. Additional changes to other portions of the airway have been proposed in a separate NPRM. The unaffected portions of the existing airway would remain as charted.

V–516: V–516 currently extends between the Pioneer, OK, VORTAC and the Oswego, KS, VOR/DME. The FAA proposes to remove the airway in its entirety.

All NAVAID radials listed in the VOR Federal airway descriptions below are unchanged and stated in True degrees.

VOR Federal airways are published in paragraph 6010(a) of FAA Order JO 7400.11F, dated August 10, 2021, and effective September 15, 2021, which is incorporated by reference in 14 CFR 71.1. The VOR Federal airways listed in this document would be published subsequently in FAA JO 7400.11.

FAA Order JO 7400.11, Airspace Designations and Reporting Points, is published yearly and effective on September 15.

Regulatory Notices and Analyses

The FAA has determined that this proposed regulation only involves an established body of technical regulations for which frequent and routine amendments are necessary to keep them operationally current. It, therefore: (1) Is not a ''significant regulatory action'' under Executive Order 12866; (2) is not a ''significant rule'' under Department of Transportation (DOT) Regulatory Policies and Procedures (44 FR 11034; February 26, 1979); and (3) does not warrant preparation of a regulatory evaluation as the anticipated impact is so minimal. Since this is a routine matter that will only affect air traffic procedures and air navigation, it is certified that this proposed rule, when promulgated, will not have a significant economic impact on a substantial number of small entities under the criteria of the Regulatory Flexibility Act.

Environmental Review

This proposal will be subject to an environmental analysis in accordance with FAA Order 1050.1F, ''Environmental Impacts: Policies and Procedures,'' prior to any FAA final regulatory action.

List of Subjects in 14 CFR Part 71

Airspace, Incorporation by reference, Navigation (air).

The Proposed Amendment

In consideration of the foregoing, the Federal Aviation Administration proposes to amend 14 CFR part 71 as follows:

PART 71—DESIGNATION OF CLASS A, B, C, D, AND E AIRSPACE AREAS; AIR TRAFFIC SERVICE ROUTES; AND REPORTING POINTS

■ 1. The authority citation for part 71 continues to read as follows:

Authority: 49 U.S.C. 106(f), 106(g); 40103, 40113, 40120; E.O. 10854, 24 FR 9565, 3 CFR, 1959–1963 Comp., p. 389.

§ 71.1 [Amended]

■ 2. The incorporation by reference in 14 CFR 71.1 of FAA Order JO 7400.11F, Airspace Designations and Reporting Points, dated August 10, 2021, and effective September 15, 2021, is amended as follows:

Paragraph 6010(a) Domestic VOR Federal Airways.

* * * * *

V–161 [Amended]

From Three Rivers, TX; Center Point, TX; Llano, TX; INT Llano 026° and Millsap, TX, 193° radials; Millsap; Bowie, TX; Ardmore, OK; Okmulgee, OK; to Tulsa, OK. From Butler, MO; Napoleon, MO; Lamoni, IA; Des Moines, IA; Mason City, IA; Rochester, MN; Farmington, MN; to Gopher, MN. From International Falls, MN; to Winnipeg, MB, Canada, excluding the airspace within Canada.

* * * * *

V–190 [Amended]

From Phoenix, AZ; St. Johns, AZ; Albuquerque, NM; Fort Union, NM; Dalhart, TX; Mitbee, OK; INT Mitbee 059° and Pioneer, OK, 280° radials; Pioneer; INT Pioneer 094° and Bartlesville, OK, 256° radials; to Bartlesville.

* * * * *

V–307 [Amended]

From Harrison, AR; to Neosho, MO. From Chanute, KS; Emporia, KS; INT Emporia 336° and Pawnee City, NE, 194° radials; Pawnee City; to Omaha, IA.

* * * * *

V–516 [Removed]

* * * * *

Issued in Washington, DC, on October 26, 2021.

Michael R. Beckles,

Acting Manager, Rules and Regulations Group.

[FR Doc. 2021–23716 Filed 11–1–21; 8:45 am]

BILLING CODE 4910–13–P

DEPARTMENT OF TRANSPORTATION

Federal Aviation Administration

14 CFR Part 71

[Docket No. FAA–2021–0821; Airspace Docket No. 21–ASW–1]

RIN 2120–AA66

Proposed Amendment, Establishment, and Revocation of Multiple Air Traffic Service (ATS) Routes in the Vicinity of Borger, TX

AGENCY: Federal Aviation Administration (FAA), DOT.

ACTION: Notice of proposed rulemaking (NPRM).

SUMMARY: This action proposes to amend Jet Route J–8 and VHF Omnidirectional Range (VOR) Federal airway V–272; establish Area Navigation (RNAV) route T–420; and remove Jet Route J–142 and VOR Federal airways V–304 and V–390. The FAA is proposing this action due to the planned decommissioning of the VOR portion of the Borger, TX, VOR/Tactical Air Navigation (VORTAC) navigational aid

(NAVAID). The Borger VOR is being decommissioned in support of the FAA's VOR Minimum Operational Network (MON) program.

DATES: Comments must be received on or before December 17, 2021.

ADDRESSES: Send comments on this proposal to the U.S. Department of Transportation, Docket Operations, 1200 New Jersey Avenue SE, West Building Ground Floor, Room W12–140, Washington, DC 20590; telephone: 1(800) 647–5527, or (202) 366–9826. You must identify FAA Docket No. FAA–2021–0821; Airspace Docket No. 21–ASW–1 at the beginning of your comments. You may also submit comments through the internet at *https://www.regulations.gov.*

FAA Order JO 7400.11F, Airspace Designations and Reporting Points, and subsequent amendments can be viewed online at *https://www.faa.gov/air_traffic/publications/.* For further information, you can contact the Rules and Regulations Group, Federal Aviation Administration, 800 Independence Avenue SW, Washington, DC 20591; telephone: (202) 267–8783. FAA Order JO 7400.11F is also available for inspection at the National Archives and Records Administration (NARA). For information on the availability of FAA Order JO 7400.11F at NARA, email: *fr.inspection@nara.gov* or go to *https://www.archives.gov/federal-register/cfr/ibr-locations.html.*

FOR FURTHER INFORMATION CONTACT: Colby Abbott, Rules and Regulations Group, Office of Policy, Federal Aviation Administration, 800 Independence Avenue SW, Washington, DC 20591; telephone: (202) 267–8783.

SUPPLEMENTARY INFORMATION:

Authority for This Rulemaking

The FAA's authority to issue rules regarding aviation safety is found in Title 49 of the United States Code. Subtitle I, Section 106 describes the authority of the FAA Administrator. Subtitle VII, Aviation Programs, describes in more detail the scope of the agency's authority. This rulemaking is promulgated under the authority described in Subtitle VII, Part A, Subpart I, Section 40103. Under that section, the FAA is charged with prescribing regulations to assign the use of the airspace necessary to ensure the safety of aircraft and the efficient use of airspace. This regulation is within the scope of that authority as it would modify the National Airspace System (NAS) as necessary to preserve the safe and efficient flow of air traffic.

Comments Invited

Interested parties are invited to participate in this proposed rulemaking by submitting such written data, views, or arguments as they may desire. Comments that provide the factual basis supporting the views and suggestions presented are particularly helpful in developing reasoned regulatory decisions on the proposal. Comments are specifically invited on the overall regulatory, aeronautical, economic, environmental, and energy-related aspects of the proposal.

Communications should identify both docket numbers (FAA Docket No. FAA–2021–0821; Airspace Docket No. 21–ASW–1) and be submitted in triplicate to the Docket Management Facility (see the **ADDRESSES** section for address and phone number). You may also submit comments through the internet at *https://www.regulations.gov.*

Commenters wishing the FAA to acknowledge receipt of their comments on this action must submit with those comments a self-addressed, stamped postcard on which the following statement is made: ''Comments to FAA Docket No. FAA–2021–0821; Airspace Docket No. 21–ASW–1.'' The postcard will be date/time stamped and returned to the commenter.

All communications received on or before the specified comment closing date will be considered before taking action on the proposed rule. The proposal contained in this action may be changed in light of comments received. All comments submitted will be available for examination in the public docket both before and after the comment closing date. A report summarizing each substantive public contact with FAA personnel concerned with this rulemaking will be filed in the docket.

Availability of NPRMs

An electronic copy of this document may be downloaded through the internet at *https://www.regulations.gov.* Recently published rulemaking documents can also be accessed through the FAA's web page at *https://www.faa.gov/air_traffic/publications/airspace_amendments/.*

You may review the public docket containing the proposal, any comments received and any final disposition in person in the Dockets Office (see the **ADDRESSES** section for address and phone number) between 9:00 a.m. and 5:00 p.m., Monday through Friday, except federal holidays. An informal docket may also be examined during normal business hours at the office of the Operations Support Group, Central Service Center, Federal Aviation Administration, 10101 Hillwood Parkway, Fort Worth, TX 76177.

Availability and Summary of Documents for Incorporation by Reference

This document proposes to amend FAA Order JO 7400.11F, Airspace Designations and Reporting Points, dated August 10, 2021, and effective September 15, 2021. FAA Order JO 7400.11F is publicly available as listed in the **ADDRESSES** section of this document. FAA Order JO 7400.11F lists Class A, B, C, D, and E airspace areas, air traffic service routes, and reporting points.

Background

The FAA is planning to decommission the Borger, TX, VOR in July 2022. The Borger VOR was one of the candidate VORs identified for discontinuance by the FAA's VOR MON program and listed in the Final policy statement notice, ''Provision of Navigation Services for the Next Generation Air Transportation System (NextGen) Transition to Performance-Based Navigation (PBN) (Plan for Establishing a VOR Minimum Operational Network),'' published in the **Federal Register** of July 26, 2016 (81 FR 48694), Docket No. FAA–2011–1082.

Although the VOR portion of the Borger VORTAC is planned for decommissioning, the co-located Tactical Air Navigation (TACAN) portion of the NAVAID, which includes Distance Measuring Equipment (DME) service, is being retained to support NextGen PBN flight procedure requirements.

The air traffic service (ATS) routes effected by the Borger VOR decommissioning are Jet Routes J–8 and J–142, and VOR Federal airways V–272, V–304, and V–390. With the planned decommissioning of the Borger VOR, the remaining ground-based NAVAID coverage in the area is insufficient to enable the continuity of the affected ATS routes. As such, proposed modification to J–8 would result in a gap in the route and to V–272 would result in the airway being shortened, as well as the proposed revocation of J–142, V–304, and V–390 in their entirety. To overcome the proposed modifications and revocations to the affected ATS routes, instrument flight rules (IFR) traffic could use portions of adjacent ATS routes, including J–6, J–14, J–58, J–76, J–78, and J–98 in the high altitude enroute structure and V–12, V–47, V–81, V–190, V–280, and V–402 in the low altitude enroute structure, or receive air traffic control (ATC) radar

vectors to fly around or through the affected area. Additionally, IFR pilots equipped with RNAV capabilities could also navigate point to point using the existing NAVAIDs and fixes that would remain in place to support continued operations though the affected area. Visual flight rules (VFR) pilots who elect to navigate via the affected ATS routes could also take advantage of the adjacent ATS routes or ATC services listed previously.

Further, the FAA proposes to establish RNAV route T–420 between the Dalhart, TX, VORTAC and Will Rogers, OK, VORTAC. The new T-route would, in part, mitigate the proposed removal of the V–272 airway segment affected by the planned Borger VOR decommissioning, reduce air traffic control (ATC) sector workload and complexity, and reduce pilot-to-controller communication. The new route would also increase NAS capacity in the route's vicinity and assist ATC when non-radar procedures are required due to frequent outages of the Amarillo Approach Control radar. Finally, the new T-route would provide airspace users equipped with RNAV an ATS route between the Dalhart, TX, area eastward to the Oklahoma City, OK, area and support the FAA's NextGen efforts to modernize the NAS navigation system from a ground-based system to a satellite-based system.

The Proposal

The FAA is proposing an amendment to 14 CFR part 71 to amend Jet Route J–8 and VOR Federal airway V–272; establish RNAV route T–420; and remove Jet Route J–142 and VOR Federal airways V–304 and V–390 due to the planned decommissioning of the Borger, TX, VOR. The proposed ATS route actions are described below.

J–8: J–8 currently extends between the Needles, CA, VORTAC and the Casanova, VA, VORTAC. The FAA proposes to remove the route segment between the Fort Union, NM, VORTAC and the Kingfisher, OK, VORTAC. Additional changes to other portions of the route have been proposed in a separate NPRM. The unaffected portions of the existing airway would remain as charted.

J–142: J–142 currently extends between the Socorro, NM, VORTAC and the Borger, TX, VORTAC. The FAA proposes to remove the route segment between the Anton Chico, NM, VORTAC and Borger VORTAC due to the planned decommissioning of the Borger VOR. Additionally, the FAA proposes to remove the remaining route segment between the Socorro VORTAC and the Anton Chico VORTAC since the distance between the VORTACs is within NAVAID service volumes and pilots could file direct. As a result, the FAA proposes to remove J–142 in its entirety.

V–272: V–272 currently extends between the Dalhart, TX, VORTAC and the Will Rogers, OK, VORTAC. The FAA proposes to remove the airway segment between the Dalhart VORTAC and the Burns Flat, OK, VORTAC. The unaffected portions of the existing airway would remain as charted.

V–304: V–304 currently extends between the Panhandle, TX, VORTAC and the Lamar, CO, VOR/Distance Measuring Equipment (VOR/DME). The FAA proposes to remove the airway segment between the Panhandle VORTAC and Liberal, KS, VORTAC due to the planned decommissioning of the Borger VOR. Additionally, the FAA proposes to remove the remaining airway segment between the Liberal VORTAC and the Lamar VOR/DME since it overlays V–210 between the two NAVAIDs and will remain available for use by NAS users. As a result, the FAA proposes to remove V–304 in its entirety.

V–390: V–390 currently extends between the Tucumcari, NM, VORTAC and the Mitbee, OK, VORTAC. The FAA proposes to remove the airway in its entirety.

T–420: T–420 is a proposed new route that would extend between the Dalhart, TX, VORTAC and the Will Rogers, OK, VORTAC. This T-route would mitigate the proposed removal of the V–272 airway segment between the Dalhart, TX, VORTAC and the Burns Flat, OK, VORTAC (noted above), as well as provide RNAV routing capability from the Dalhart, TX, area, eastward to the Oklahoma City, OK, area.

All NAVAID radials listed in the Jet Route description below are unchanged and stated in True degrees.

Jet Routes are published in paragraph 2004, VOR Federal airways are published in paragraph 6010(a), and RNAV T-routes are published in paragraph 6011 of FAA Order JO 7400.11F, dated August 10, 2021, and effective September 15, 2021, which is incorporated by reference in 14 CFR 71.1. The ATS routes listed in this document would be published subsequently in FAA Order JO 7400.11.

FAA Order JO 7400.11, Airspace Designations and Reporting Points, is published yearly and effective on September 15.

Regulatory Notices and Analyses

The FAA has determined that this proposed regulation only involves an established body of technical regulations for which frequent and routine amendments are necessary to keep them operationally current. It, therefore: (1) Is not a ''significant regulatory action'' under Executive Order 12866; (2) is not a ''significant rule'' under Department of Transportation (DOT) Regulatory Policies and Procedures (44 FR 11034; February 26, 1979); and (3) does not warrant preparation of a regulatory evaluation as the anticipated impact is so minimal. Since this is a routine matter that will only affect air traffic procedures and air navigation, it is certified that this proposed rule, when promulgated, will not have a significant economic impact on a substantial number of small entities under the criteria of the Regulatory Flexibility Act.

Environmental Review

This proposal will be subject to an environmental analysis in accordance with FAA Order 1050.1F, ''Environmental Impacts: Policies and Procedures,'' prior to any FAA final regulatory action.

List of Subjects in 14 CFR Part 71

Airspace, Incorporation by reference, Navigation (air).

The Proposed Amendment

In consideration of the foregoing, the Federal Aviation Administration proposes to amend 14 CFR part 71 as follows:

PART 71—DESIGNATION OF CLASS A, B, C, D, AND E AIRSPACE AREAS; AIR TRAFFIC SERVICE ROUTES; AND REPORTING POINTS

■ 1. The authority citation for part 71 continues to read as follows:

Authority: 49 U.S.C. 106(f), 106(g); 40103, 40113, 40120; E.O. 10854, 24 FR 9565, 3 CFR, 1959–1963 Comp., p. 389.

§ 71.1 [Amended]

■ 2. The incorporation by reference in 14 CFR 71.1 of FAA Order JO 7400.11F, Airspace Designations and Reporting Points, dated August 10, 2021, and effective September 15, 2021, is amended as follows:

Paragraph 2004 Jet Routes.

* * * * *

J–8 [Amended]

From Needles, CA; Flagstaff, AZ; Gallup, NM; to Fort Union, NM. From Kingfisher, OK; Springfield, MO; St Louis, MO; Louisville, KY; Charleston, WV; INT Charleston 092° and Casanova, VA, 253° radials; to Casanova.

* * * * *

J–142 [Removed]

* * * * *

Paragraph 6010(a) Domestic VOR Federal Airways.

* * * * *

V–272 [Amended]

From Burns Flat, OK; to Will Rogers, OK.

* * * * *

V–304 [Removed]

* * * * *

V–390 [Removed]

* * * * *

Paragraph 6011 United States Area Navigation Routes.

* * * * *

T–420 DALHART, TX (DHT) TO WILL ROGERS, OK (IRW) [NEW]

Dalhart, TX (DHT)	VORTAC	(Lat. 36°05′29.24″ N, long. 102°32′40.71″ W)
Burns Flat, OK (BFV)	VORTAC	(Lat. 35°14′13.00″ N, long. 099°12′22.20″ W)
Will Rogers, OK (IRW)	VORTAC	(Lat. 35°21′30.95″ N, long. 097°36′33.22″ W)

Issued in Washington, DC, on October 26, 2021.

Michael R. Beckles,

Acting Manager, Rules and Regulations Group.

[FR Doc. 2021–23711 Filed 11–1–21; 8:45 am]

BILLING CODE 4910–13–P

DEPARTMENT OF TRANSPORTATION

Federal Aviation Administration

14 CFR Part 71

[Docket No. FAA–2021–0822; Airspace Docket No. 21–AGL–1]

RIN 2120–AA66

Proposed Amendment of VOR Federal Airways V–214, V–285, and V–305, and Revocation of V–96 in the Vicinity of Kokomo, IN

AGENCY: Federal Aviation Administration (FAA), DOT.

ACTION: Notice of proposed rulemaking (NPRM).

SUMMARY: This action proposes to amend VHF Omnidirectional Range (VOR) Federal airways V–214, V–285, and V–305, and revoke V–96. The FAA is proposing this action due to the planned decommissioning of the VOR portion of the Kokomo, IN, VOR/Tactical Air Navigation (VORTAC) navigational aid (NAVAID). The Kokomo VOR is being decommissioned in support of the FAA's VOR Minimum Operational Network (MON) program.

DATES: Comments must be received on or before December 17, 2021.

ADDRESSES: Send comments on this proposal to the U.S. Department of Transportation, Docket Operations, 1200 New Jersey Avenue SE, West Building Ground Floor, Room W12–140, Washington, DC 20590; telephone: 1(800) 647–5527, or (202) 366–9826. You must identify FAA Docket No. FAA–2021–0822; Airspace Docket No. 21–AGL–1 at the beginning of your comments. You may also submit comments through the internet at *https://www.regulations.gov.*

FAA Order JO 7400.11F, Airspace Designations and Reporting Points, and subsequent amendments can be viewed online at *https://www.faa.gov/air_traffic/publications/.* For further information, you can contact the Rules and Regulations Group, Federal Aviation Administration, 800 Independence Avenue SW, Washington, DC 20591; telephone: (202) 267–8783. FAA JO 7400.11F is also available for inspection at the National Archives and Records Administration (NARA). For information on the availability of FAA Order JO 7400.11F at NARA, email: *fr.inspection@nara.gov* or go to *https://www.archives.gov/federal-register/cfr/ibr-locations.html.*

FOR FURTHER INFORMATION CONTACT: Colby Abbott, Rules and Regulations Group, Office of Policy, Federal Aviation Administration, 800 Independence Avenue SW, Washington, DC 20591; telephone: (202) 267–8783.

SUPPLEMENTARY INFORMATION:

Authority for This Rulemaking

The FAA's authority to issue rules regarding aviation safety is found in Title 49 of the United States Code. Subtitle I, Section 106 describes the authority of the FAA Administrator. Subtitle VII, Aviation Programs, describes in more detail the scope of the agency's authority. This rulemaking is promulgated under the authority described in Subtitle VII, Part A, Subpart I, Section 40103. Under that section, the FAA is charged with prescribing regulations to assign the use of the airspace necessary to ensure the safety of aircraft and the efficient use of airspace. This regulation is within the scope of that authority as it would modify the National Airspace System (NAS) as necessary to preserve the safe and efficient flow of air traffic.

Comments Invited

Interested parties are invited to participate in this proposed rulemaking by submitting such written data, views, or arguments as they may desire. Comments that provide the factual basis supporting the views and suggestions presented are particularly helpful in developing reasoned regulatory decisions on the proposal. Comments are specifically invited on the overall regulatory, aeronautical, economic, environmental, and energy-related aspects of the proposal.

Communications should identify both docket numbers (FAA Docket No. FAA–2021–0822; Airspace Docket No. 21–AGL–1) and be submitted in triplicate to the Docket Management Facility (see the **ADDRESSES** section for address and phone number). You may also submit comments through the internet at *https://www.regulations.gov.*

Commenters wishing the FAA to acknowledge receipt of their comments on this action must submit with those comments a self-addressed, stamped postcard on which the following statement is made: ''Comments to FAA Docket No. FAA–2021–0822; Airspace Docket No. 21–AGL–1.'' The postcard will be date/time stamped and returned to the commenter.

All communications received on or before the specified comment closing date will be considered before taking action on the proposed rule. The proposal contained in this action may be changed in light of comments received. All comments submitted will be available for examination in the public docket both before and after the comment closing date. A report summarizing each substantive public contact with FAA personnel concerned with this rulemaking will be filed in the docket.

Availability of NPRMs

An electronic copy of this document may be downloaded through the internet at *https://www.regulations.gov.* Recently published rulemaking documents can also be accessed through the FAA's web page at *https://www.faa.gov/air_traffic/publications/airspace_amendments/.*

You may review the public docket containing the proposal, any comments received and any final disposition in person in the Dockets Office (see the **ADDRESSES** section for address and phone number) between 9:00 a.m. and 5:00 p.m., Monday through Friday, except Federal holidays. An informal docket may also be examined during normal business hours at the office of

the Operations Support Group, Central Service Center, Federal Aviation Administration, 10101 Hillwood Parkway, Fort Worth, TX 76177.

Availability and Summary of Documents for Incorporation by Reference

This document proposes to amend FAA Order JO 7400.11F, Airspace Designations and Reporting Points, dated August 10, 2021, and effective September 15, 2021. FAA Order JO 7400.11F is publicly available as listed in the **ADDRESSES** section of this document. FAA Order JO 7400.11F lists Class A, B, C, D, and E airspace areas, air traffic service routes, and reporting points.

Background

The FAA is planning to decommission the Kokomo, IN, VOR in July 2022. The Kokomo VOR was one of the candidate VORs identified for discontinuance by the FAA's VOR MON program and listed in the Final policy statement notice, ''Provision of Navigation Services for the Next Generation Air Transportation System (NextGen) Transition to Performance-Based Navigation (PBN) (Plan for Establishing a VOR Minimum Operational Network),'' published in the **Federal Register** of July 26, 2016 (81 FR 48694), Docket No. FAA–2011–1082.

Although the VOR portion of the Kokomo VORTAC is planned for decommissioning, the co-located Distance Measuring Equipment (DME) is being retained to support NextGen PBN flight procedure requirements.

The VOR Federal airways affected by the Kokomo VOR decommissioning are V–96, V–214, V–285, and V–305. With the planned decommissioning of the Kokomo VOR, the remaining ground-based NAVAID coverage in the area is insufficient to enable the continuity of the affected airways. As such, proposed modifications to V–214, V–285, and V–305 would result in the airways being shortened, as well as the proposed revocation of V–96 in its entirety. To overcome the proposed modifications and revocation to the affected airways, instrument flight rules (IFR) traffic could use portions of adjacent VOR Federal airways, including V–11, V–38, V–51, V–55, V–97, V–192, V–210, V–340, and V–371, or receive air traffic control (ATC) radar vectors to fly around or through the affected area. Additionally, IFR pilots equipped with RNAV capabilities could also navigate point to point using the existing fixes that would remain in place to support continued operations through the affected area. Visual flight rules (VFR) pilots who elect to navigate via the affected ATS routes could also take advantage of the adjacent ATS routes or ATC services listed previously.

Prior to this NPRM, the FAA published a rule for Docket No. FAA–2021–0086 in the **Federal Register** (86 FR 52961; September 24, 2021), amending VOR Federal airway V–285 by removing the airway segment between the White Cloud, MI, VOR/DME and the Traverse City, MI, VOR/DME. That airway amendment, effective December 2, 2021, is included in this NPRM.

The Proposal

The FAA is proposing an amendment to 14 CFR part 71 to amend VOR Federal airways V–214, V–285, and V–305, and to remove VOR Federal airway V–96 due to the planned decommissioning of the Kokomo, IN, VOR. The proposed VOR Federal airway actions are described below.

V–96: V–96 currently extends between the Brickyard, IN, VORTAC and the intersection of the Fort Wayne, IN, VORTAC 071° and Flag City, OH, VORTAC 289° radials (TWERP fix). The FAA proposes to remove the airway in its entirety.

V–214: V–214 currently extends between the Kokomo, IN, VORTAC and the Muncie, IN, VOR/Distance Measuring Equipment (VOR/DME); between the intersection of the Appleton, OH, VORTAC 236° and Zanesville, OH, VOR/DME 274° radials (GLOOM fix) and the Bellaire, OH, VOR/DME; and between the Martinsburg, WV, VORTAC and the Teterboro, NJ, VOR/DME. The FAA proposes to remove the airway segment between the Kokomo, IN, VORTAC and the Muncie, IN, VOR/DME. The unaffected portions of the existing airway would remain as charted.

V–285: V–285 currently extends between the Brickyard, IN, VORTAC and the White Cloud, MI, VOR/DME. The FAA proposes to remove the airway segment between the Brickyard, IN, VORTAC and Goshen, IN, VORTAC. The unaffected portions of the existing airway would remain as charted.

V–305: V–305 currently extends between the El Dorado, AR, VOR/DME and the Kokomo, IN, VORTAC. The FAA proposes to remove the airway segment between the Brickyard, IN, VORTAC and Kokomo, IN, VORTAC. The unaffected portions of the existing airway would remain as charted.

All NAVAID radials listed in the VOR Federal airway descriptions below are unchanged and stated in True degrees.

VOR Federal airways are published in paragraph 6010(a) of FAA Order JO 7400.11F, dated August 10, 2021, and effective September 15, 2021, which is incorporated by reference in 14 CFR 71.1. The VOR Federal airways listed in this document would be published subsequently in FAA JO 7400.11.

FAA Order JO 7400.11, Airspace Designations and Reporting Points, is published yearly and effective on September 15.

Regulatory Notices and Analyses

The FAA has determined that this proposed regulation only involves an established body of technical regulations for which frequent and routine amendments are necessary to keep them operationally current. It, therefore: (1) Is not a ''significant regulatory action'' under Executive Order 12866; (2) is not a ''significant rule'' under Department of Transportation (DOT) Regulatory Policies and Procedures (44 FR 11034; February 26, 1979); and (3) does not warrant preparation of a regulatory evaluation as the anticipated impact is so minimal. Since this is a routine matter that will only affect air traffic procedures and air navigation, it is certified that this proposed rule, when promulgated, will not have a significant economic impact on a substantial number of small entities under the criteria of the Regulatory Flexibility Act.

Environmental Review

This proposal will be subject to an environmental analysis in accordance with FAA Order 1050.1F, ''Environmental Impacts: Policies and Procedures,'' prior to any FAA final regulatory action.

List of Subjects in 14 CFR Part 71

Airspace, Incorporation by reference, Navigation (air).

The Proposed Amendment

In consideration of the foregoing, the Federal Aviation Administration proposes to amend 14 CFR part 71 as follows:

PART 71—DESIGNATION OF CLASS A, B, C, D, AND E AIRSPACE AREAS; AIR TRAFFIC SERVICE ROUTES; AND REPORTING POINTS

■ 1. The authority citation for part 71 continues to read as follows:

Authority: 49 U.S.C. 106(f), 106(g); 40103, 40113, 40120; E.O. 10854, 24 FR 9565, 3 CFR, 1959–1963 Comp., p. 389.

§ 71.1 [Amended]

■ 2. The incorporation by reference in 14 CFR 71.1 of FAA Order JO 7400.11F, Airspace Designations and Reporting Points, dated August 10, 2021, and

effective September 15, 2021, is amended as follows:

Paragraph 6010(a) Domestic VOR Federal Airways.

* * * * *

V–96 [Removed]

* * * * *

V–214 [Amended]

From INT Appleton, OH, 236° and Zanesville, OH, 274° radials; Zanesville; to Bellaire, OH. From Martinsburg, WV; INT Martinsburg 094° and Baltimore, MD, 300° radials; Baltimore; INT Baltimore 093° and Dupont, DE, 223° radials; Dupont; Yardley, PA; to Teterboro, NJ.

* * * * *

V–285 [Amended]

From Goshen, IN; INT Goshen 038° and Kalamazoo, MI, 191° radials; Kalamazoo; INT Kalamazoo 014° and Victory, MI, 167° radials; Victory; to White Cloud, MI.

* * * * *

V–305 [Amended]

From El Dorado, AR; Little Rock, AR; Walnut Ridge, AR; Malden, MO; Cunningham, KY; Pocket City, IN; INT Pocket City 046° and Hoosier, IN, 205° radials; Hoosier; INT Hoosier 025° and Brickyard, IN, 185° radials; to Brickyard.

* * * * *

Issued in Washington, DC, on October 26, 2021.

Michael R. Beckles,

Acting Manager, Rules and Regulations Group.

[FR Doc. 2021–23710 Filed 11–1–21; 8:45 am]

BILLING CODE 4910–13–P

DEPARTMENT OF TRANSPORTATION

Federal Aviation Administration

14 CFR Part 71

[Docket No. FAA–2021–0917; Airspace Docket No. 21–ANM–45]

RIN 2120–AA66

Proposed Amendment of Class E Airspace; Kit Carson County Airport, CO

AGENCY: Federal Aviation Administration (FAA), DOT.

ACTION: Notice of proposed rulemaking (NPRM).

SUMMARY: This action proposes to amend the Class E airspace extending upward from 700 feet above the surface of the earth at Kit Carson County Airport, Burlington, CO. This action would accommodate a new area navigation (RNAV) procedure and ensure the safety and management of instrument flight rule (IFR) operations within the National Airspace System.

DATES: Comments must be received on or before December 17, 2021.

ADDRESSES: Send comments on this proposal to the U.S. Department of Transportation, Docket Operations, 1200 New Jersey Avenue SE, West Building Ground Floor, Room W12–140, Washington, DC 20590; telephone: 1–800–647–5527, or (202) 366–9826. You must identify FAA Docket No. FAA–2021–0917; Airspace Docket No. 21–ANM–45, at the beginning of your comments. You may also submit comments through the internet at *https://www.regulations.gov*.

FAA Order JO 7400.11F, Airspace Designations and Reporting Points, and subsequent amendments can be viewed online at *https://www.faa.gov/air_traffic/publications/*. For further information, you can contact the Airspace Policy Group, Federal Aviation Administration, 800 Independence Avenue SW, Washington, DC 20591; telephone: (202) 267–8783. FAA Order JO 7400.11 is also available for inspection at the National Archives and Records Administration (NARA). For information on the availability of FAA Order JO 7400.11F at NARA, email: *fr.inspection@nara.gov,* or go to *https://www.archives.gov/federal-register/cfr/ibr-locations.html.*

FOR FURTHER INFORMATION CONTACT: Elizabeth Healy, Federal Aviation Administration, Western Service Center, Operations Support Group, 2200 S 216th Street, Des Moines, WA 98198; telephone (206) 231–2227.

SUPPLEMENTARY INFORMATION:

Authority for This Rulemaking

The FAA's authority to issue rules regarding aviation safety is found in Title 49 of the United States Code. Subtitle I, Section 106 describes the authority of the FAA Administrator. Subtitle VII, Aviation Programs, describes in more detail the scope of the agency's authority. This rulemaking is promulgated under the authority described in Subtitle VII, Part A, Subpart I, Section 40103. Under that section, the FAA is charged with prescribing regulations to assign the use of airspace necessary to ensure the safety of aircraft and the efficient use of airspace. This regulation is within the scope of that authority as it would amend the Class E airspace extending upward from 700 feet above the surface of the earth to support IFR operations at Kit Carson County Airport, Burlington, CO.

Comments Invited

Interested parties are invited to participate in this proposed rulemaking by submitting such written data, views, or arguments, as they may desire. Comments that provide the factual basis supporting the views and suggestions presented are particularly helpful in developing reasoned regulatory decisions on the proposal. Comments are specifically invited on the overall regulatory, aeronautical, economic, environmental, and energy-related aspects of the proposal. Communications should identify both docket numbers and be submitted in triplicate to the address listed above. Persons wishing the FAA to acknowledge receipt of their comments on this notice must submit with those comments a self-addressed, stamped postcard on which the following statement is made: ''Comments to Docket No. FAA–2021–0917; Airspace Docket No. 21–ANM–45''. The postcard will be date/time stamped and returned to the commenter.

All communications received before the specified closing date for comments will be considered before taking action on the proposed rule. The proposal contained in this notice may be changed in light of the comments received. A report summarizing each substantive public contact with FAA personnel concerned with this rulemaking will be filed in the docket.

Availability of NPRMs

An electronic copy of this document may be downloaded through the internet at *https://www.regulations.gov.* Recently published rulemaking documents can also be accessed through the FAA's web page at *https://www.faa.gov/air_traffic/publications/airspace_amendments/.*

You may review the public docket containing the proposal, any comments received, and any final disposition in person in the Dockets Office (see the **ADDRESSES** section for the address and phone number) between 9:00 a.m. and 5:00 p.m., Monday through Friday, except federal holidays. An informal docket may also be examined during normal business hours at the Northwest Mountain Regional Office of the Federal Aviation Administration, Air Traffic Organization, Western Service Center, Operations Support Group, 2200 S 216th Street, Des Moines, WA 98198.

Availability and Summary of Documents for Incorporation by Reference

This document proposes to amend FAA Order JO 7400.11F, Airspace Designations and Reporting Points, dated August 10, 2021, and effective September 15, 2021. FAA Order JO 7400.11F is publicly available as listed

in the **ADDRESSES** section of this document. FAA Order JO 7400.11F lists Class A, B, C, D, and E airspace areas, air traffic service routes, and reporting points.

The Proposal

The FAA is proposing an amendment to 14 CFR part 71 by amending the Class E airspace extending upward from 700 feet above the surface of the earth at Kit Carson County Airport, Burlington, CO.

The proposed Class E airspace extending upward from 700 feet above ground level (AGL) would be amended to within a 6.5-mile radius of the airport with a 7.0-mile radius bump out from the 207° bearing from the airport clockwise to the 268° bearing from the airport, and extensions south, northwest, and north of the airport should be established to contain IFR departures to 1,200 feet above the surface and IFR arrivals descending below 1,500 feet above the surface. The southern extension would be within 2.6 miles on each side of the 160° bearing from the airport, extending from the 6.5-mile radius to 8.5 miles south of the airport. The northwest extension would be within 2.6 miles on each side of the 326° bearing from the airport, extending from the 6.5-mile radius to 7.5 miles northwest of the airport. Finally, the northern extension would be within 1.0 miles on each side of the 340° bearing from the airport, extending from the 6.5-mile radius to 10.8 miles north of the airport.

This action also proposes two administrative updates to the Class E legal description. The second line of the text header should be updated from ''Burlington, Kit Carson County Airport, CO'' to ''Kit Carson County Airport'', to match the FAA database. Additionally, the third line of the text header should be updated from ''(Lat. 39°14′41″ N, long. 102°17′05″ W) to ''(Lat. 39°14′33″ N, long. 102°17′07″ W)'' to match the FAA database.

Class E airspace designations are published in paragraph 6005 of FAA Order JO 7400.11F, dated August 10, 2021, and effective September 15, 2021, which is incorporated by reference in 14 CFR 71.1. The Class E airspace designations listed in this document will be published subsequently in FAA Order JO 7400.11.

FAA Order JO 7400.11, Airspace Designations and Reporting Points, is published yearly and effective on September 15.

Regulatory Notices and Analyses

The FAA has determined that this regulation only involves an established body of technical regulations for which frequent and routine amendments are necessary to keep them operationally current, is non-controversial and unlikely to result in adverse or negative comments. It, therefore: (1) Is not a ''significant regulatory action'' under Executive Order 12866; (2) is not a ''significant rule'' under DOT Regulatory Policies and Procedures (44 FR 11034; February 26, 1979); and (3) does not warrant preparation of a regulatory evaluation as the anticipated impact is so minimal. Since this is a routine matter that will only affect air traffic procedures and air navigation, it is certified that this rule, when promulgated, would not have a significant economic impact on a substantial number of small entities under the criteria of the Regulatory Flexibility Act.

Environmental Review

This proposal will be subject to an environmental analysis in accordance with FAA Order 1050.1F, ''Environmental Impacts: Policies and Procedures'' prior to any FAA final regulatory action.

List of Subjects in 14 CFR Part 71

Airspace, Incorporation by reference, Navigation (air).

The Proposed Amendment

Accordingly, pursuant to the authority delegated to me, the Federal Aviation Administration proposes to amend 14 CFR part 71 as follows:

PART 71—DESIGNATION OF CLASS A, B, C, D, AND E AIRSPACE AREAS; AIR TRAFFIC SERVICE ROUTES; AND REPORTING POINTS

■ 1. The authority citation for 14 CFR part 71 continues to read as follows:

Authority: 49 U.S.C. 106(f), 106(g), 40103, 40113, 40120; E.O. 10854, 24 FR 9565, 3 CFR, 1959–1963 Comp., p. 389.

§ 71.1 [Amended]

■ 2. The incorporation by reference in 14 CFR 71.1 of FAA Order JO 7400.11F, Airspace Designations and Reporting Points, dated July 21, 2020, and effective September 15, 2020, is amended as follows:

Paragraph 6005 Class E Airspace Areas Extending Upward From 700 Feet or More Above the Surface of the Earth.

* * * * *

ANM CO E5 Burlington, CO [Amended]

Kit Carson County Airport, CO
(Lat. 39°14′33″ N, long. 102°17′07″ W)

That airspace extending upward from 700 feet above the surface within 6.5-mile radius of the Kit Carson County Airport, and within a 7.0-mile radius of the airport from the 207° bearing from the airport clockwise to the 283° bearing from the airport, and within 2.6 miles on each side of the 160° bearing from the airport, extending from the 6.5-mile radius to 8.5 miles south of the airport, and within 2.6 miles on each side of the 326° bearing from the airport, extending from the 6.5-mile radius to 7.5 miles northwest of the airport, and within 1.0 mile on each side of the 340° bearing from the airport, extending from the 6.5-mile radius to 10.8 miles north of the airport.

Issued in Des Moines, Washington, on October 27, 2021.

B.G. Chew,

Acting Group Manager, Operations Support Group, Western Service Center.

[FR Doc. 2021–23808 Filed 11–1–21; 8:45 am]

BILLING CODE 4910–13–P

DEPARTMENT OF TRANSPORTATION

Federal Aviation Administration

14 CFR Part 121

[Docket No.: FAA–2019–0770; Notice No. 22–01]

RIN 2120–AL41

Flight Attendant Duty Period Limitations and Rest Requirements

AGENCY: Federal Aviation Administration (FAA), Department of Transportation (DOT).

ACTION: Notice of proposed rulemaking (NPRM).

SUMMARY: This action arises out of a statutory mandate in the FAA Reauthorization Act of 2018, which requires rulemaking to increase the minimum rest period for flight attendants in domestic, flag, and supplemental operations who are scheduled for a duty period of 14 hours or less. The statute also requires rulemaking to prohibit a reduction of the rest period under any circumstances. Consistent with the statutory mandate, the FAA proposes to amend its regulations to ensure that flight attendants scheduled to a duty period of 14 hours or less are given a scheduled rest period of at least 10 consecutive hours and that the rest period is not reduced under any circumstances.

DATES: Send comments on or before January 3, 2022.

ADDRESSES: Send comments identified by docket number FAA–2019–0770 using any of the following methods:

• *Federal eRulemaking Portal:* Go to *http://www.regulations.gov* and follow the online instructions for sending your comments electronically.

• *Mail:* Send comments to Docket Operations, M–30; U.S. Department of Transportation (DOT), 1200 New Jersey Avenue SE, Room W12–140, West Building, Ground Floor, Washington, DC 20590–0001.

• *Hand Delivery or Courier:* Take comments to Docket Operations in Room W12–140 of the West Building Ground Floor at 1200 New Jersey Avenue SE, Washington, DC, between 9 a.m. and 5 p.m., Monday through Friday, except Federal holidays.

• *Fax:* Fax comments to Docket Operations at 202–493–2251.

Privacy: In accordance with 5 U.S.C. 553(c), DOT solicits comments from the public to better inform its rulemaking process. DOT posts these comments, without edit, including any personal information the commenter provides, to *www.regulations.gov,* as described in the system of records notice (DOT/ALL–14 FDMS), which can be reviewed at *www.dot.gov/privacy.*

Docket: Background documents or comments received may be read at *http://www.regulations.gov* at any time. Follow the online instructions for accessing the docket or go to the Docket Operations in Room W12–140 of the West Building, Ground Floor at 1200 New Jersey Avenue SE, Washington, DC, between 9 a.m. and 5 p.m., Monday through Friday, except Federal holidays.

FOR FURTHER INFORMATION CONTACT:

Daniel T. Ronneberg, Part 121 Air Carrier Operations, Air Transportation Division, AFS–220, Federal Aviation Administration, 800 Independence Avenue SW, Washington, DC 20591; telephone (202) 267–1216; email *Dan.Ronneberg@faa.gov.*

SUPPLEMENTARY INFORMATION:

I. Executive Summary

This proposed rule addresses the requirement of section 335(a) of the FAA Reauthorization Act of 2018 (the FAARA 2018), codified at 49 U.S.C. 44701 note. Section 335(a) requires the FAA to conduct rulemaking to increase to 10 hours the minimum rest period for flight attendants in domestic, flag, and supplemental operations who are scheduled for a duty period of 14 hours or less; and to prohibit the reduction of the rest period under any circumstances. The FAA's existing regulations require only a 9-hour rest period for these flight attendants which can be reduced to 8 hours in certain circumstances. Consistent with the requirement of section 335(a) of the FAARA 2018, the FAA proposes to amend § 121.467(b)(2) and (b)(3) to require 10 hours of consecutive rest, remove the existing allowance for a reduction in rest time, and prohibit the reduction of the 10 hours of consecutive rest time under any circumstances.

II. Authority for This Rulemaking

The FAA's authority to issue rules on aviation safety is found in Title 49 of the United States Code (U.S.C.). Subtitle I, Section 106 describes the authority of the FAA Administrator. Section 106(f) vests final authority in the Administrator for carrying out all functions, powers, and duties of the administration relating to the promulgation of regulations and rules.

Subtitle VII, Aviation Programs, describes in more detail the scope of the Agency's authority. Section 44701(a)(4) requires the Administrator to promulgate regulations in the interest of safety for the ''maximum hours or periods of service of airmen and other employees of air carriers.'' Section 44701(a)(5) requires the Administrator to promulgate ''regulations and minimum standards for other practices, methods, and procedure that the Administrator finds necessary for safety in air commerce and national security.'' In addition, 49 U.S.C. 44701(d)(1)(A) specifically states that the Administrator, when prescribing safety regulations, must consider the duty of an air carrier to provide service with the highest possible degree of safety in the public interest. Such authority applies to the oversight the FAA exercises to ensure safety of air carrier operations, including crewmember flight, duty, and rest requirements.

Further, section 335(a) of the FAARA 2018 (Pub. L. 115–254, 132 Stat. 3186 (Oct. 5, 2018)), codified at 49 U.S.C. 44701 note, requires the FAA to amend the flight attendant duty period limitations and rest regulation to increase the minimum rest period for flight attendants in domestic, flag, and supplemental operations who are scheduled for a duty period of 14 hours or less. Section 335(a) also prohibits reduction of the rest period under any circumstances.

III. Background

Flight Attendant Requirements

The FAA defines a flight attendant serving in operations conducted under 14 § part 121 as an individual, other than a flightcrew member,[1] who is assigned by a certificate holder conducting domestic, flag, or supplemental operations to duty in an aircraft during flight time and whose duties include activities related to ensuring cabin safety.[2] Section 121.391 specifies the minimum number of flight attendants required on board a flight, based on maximum payload capacity and seating capacity, for certificate holders conducting passenger-carrying operations under part 121.[3]

Any person serving as a flight attendant in part 121 operations must complete the training and qualification requirements of part 121 subparts N and O.[4] These training and qualification requirements include specific programmed hours,[5] as well as airplane type specific knowledge and skill requirements.

Flight attendants are responsible for taking action during emergencies, including administering first aid, conducting aircraft evacuations, responding to inflight fires, managing medical emergencies, and handling passengers who threaten the safety of other passengers or might be unruly or disruptive. They must also be prepared to respond to situations that could threaten the safety of the passengers and the flight, including turbulent air, airplane decompression, and hijackings. They must know the location of emergency exits, fire extinguishers, first aid kits, flotation devices, oxygen masks, and emergency slides, and check emergency equipment before flight. They must assess and verify the suitability of passengers that occupy exit seating, brief passengers on safety equipment, evacuation, and crash landing procedures, and ensure compliance with applicable safety regulations.

Advance Notice of Proposed Rulemaking (ANPRM) and Discussion of Public Comments

On September 25, 2019, the FAA published an ANPRM, *Flight Attendant Duty Period Limitations and Rest Requirements* (84 FR 50349). The FAA determined that soliciting public input on the regulatory impact of the changes to flight attendant duty and rest requirements codified in Section 335(a) of the FAARA 2018 was appropriate. The FAA also intended for the ANPRM to provide additional avenues for public participation and to inform the FAA's analysis and rulemaking development.

The FAA received 216 comments on the ANPRM. Commenters included many individuals, Airlines for America

[1] A ''flightcrew member'' is a pilot, flight engineer, or flight navigator assigned to duty in an aircraft during flight time. 14 CFR 1.1.

[2] 14 CFR 121.467(a).

[3] 14 CFR 121.391 provides that a certificate holder may, however, use more than the required number of flight attendants.

[4] 14 CFR 121.392.

[5] Under 14 CFR 121.421, ''programmed hours'' refers to hours of training or instruction in specific subjects, in a flight attendant training program.

(A4A), Endeavor Air, Air Line Pilots Association (ALPA), Transportation Trades Department (TTD), Transport Workers Union of America (TWU), American Academy of Sleep Medicine (AASM), Association of Flight Attendants (AFA), International Brotherhood of Teamsters (IBT), International Association of Machinists and Aerospace Workers (IAM), and Association of Professional Flight Attendants (AFPA).

The commenters raised three principal issues: Increased rest period, costs, and implementation. A4A and Endeavor Air provided information indicating the increased rest period would increase costs to certificate holders. ALPA, TTD, TWU, AASM, AFA, IBT, IAM, APFA, and many individuals supported the increased rest period, emphasizing the roles and responsibilities of flight attendants with regard to aviation safety, commenting that flight attendants' performance of their duties is fatigue-inducing and that they would benefit from increased rest. These commenters also stated that the increased rest would not always result in increased costs.

Rest Period

Many commenters supported increasing the rest period to at least 10 consecutive hours. AASM stated that providing flight attendants with a 10-hour minimum rest period should increase their sleep duration and subsequent on-the-job alertness and performance. Some commenters went further to request that the FAA require flight attendants to receive more rest hours, such as a period of 12 hours. Other commenters recommended that for every hour of duty, the FAA should require certificate holders to provide a flight attendant one hour or one and a half hours of rest. In addition, some commenters recommended that the rest period should only begin at hotel check-in, to maximize rest.

Some commenters asked the FAA to consider research on flight attendant fatigue and to look generally at its flight, duty, and rest scheme for flight attendants. AASM stated that further research is required to determine whether the minimum rest period should be modified for duty periods that encroach on the biological night. Additionally, one individual recommended the FAA review existing research on flight attendant fatigue from the Civil Aerospace Medical Institute (CAMI) and suggested that the FAA align flight attendant flight, duty, and rest requirements with flightcrew members' rest schemes.

A4A and Endeavor Air provided information indicating the increased rest period would increase costs to certificate holders. A4A commented that flight attendant rest requirements are necessary and that they strongly support scientifically validated and data-driven countermeasures to prevent fatigue. A4A stated, however, that regulations should be limited to implementing only what is required by the statute and stated the FAA should incorporate cost mitigation measures. A4A also mentioned that the FAA could achieve the safety benefits of this regulation effectively and more efficiently through a risk-based rule in lieu of prescriptive hours-based requirements.

The FAA's action to propose this rulemaking complies with the requirements of section 335(a) of the FAARA 2018. Accordingly, the FAA has scoped this rulemaking to address the discrete, specific statutory mandate in section 335(a) and does not propose further amendments to flight attendant flight, duty, and rest schemes, as some commenters suggested. In addition, the FAA lacks data and supporting research or studies that would support a further increase in the rest period.

The rest requirement provided in this rulemaking is a minimum rest requirement. The FAA notes that, while not part of this rulemaking, section 335(b) of the FAARA 2018 mandates certificate holders conducting operations under part 121 to submit to the FAA flight attendant fatigue risk management plans (FRMP), which encompass a risk-based approach to flight attendant rest consistent with the FAA regulations on rest requirements for flight attendants. Certificate holders have the option to amend their FRMPs to provide flight attendants with more rest than the FAA requires, and nothing in this NPRM would preclude a certificate holder from increasing the rest period.

Cost

A4A stated that implementing this proposal would reduce schedule flexibility, result in a potential loss of income for flight attendants, and increase cost to certificate holders due to new hire turnover costs, training costs, scheduling software costs, and travel costs. A4A estimated that it would cost $786 million over 10 years for the 66 percent of flight attendants who are employed by certificate holders that are members of A4A's organization, and estimated $1 billion over 10 years for all certificate holders. A4A noted that the increased rest period may result in flight attendants having ''unpaid idle time'' away from their home base, resulting in a reduction in the average pay credit per calendar day spent at work. A4A also stated that certificate holders will need to plan for 11 hours of rest instead of 10 hours, in order to ensure an appropriate buffer for delays, and that eliminating certificate holders' ability to reduce rest during day-of operations will drive extensive additional costs and harm flight attendants, who might otherwise choose to stay on duty longer. A4A stated that flight attendants may need to change the way they bid for schedules and may have to choose between flying longer at night or flying more days during the month to get the same hours they are getting now. A4A also stated that less senior flight attendants are likely to be exposed to trips that are most impacted by the implementation of section 335(a) and less desirable schedules, and that flight attendants will have fewer days off per month because they will have to increase the number of trips they fly each month to maintain the same number of flight hours and standard of living they had prior to implementing section 335(a).

A4A further commented that, if a certificate holder does not increase its flight attendant scheduling construction and aircraft route scheduling buffer, it will simply have to manage the consequences and costs of delays that arise out of irregular operations and maintenance. In these circumstances, A4A suggested certificate holders will have to remove the flight attendants that are about to ''time out'' because they have not received the scheduled rest required by section 335(a) and must assign other flight attendants (if any are available, which might not be the case at many smaller airports) to finish the trip while paying both the timed out and active flight attendant. In the alternative, A4A mentioned certificate holders might push back the departure time of the next flight to which these flight attendants are assigned in order to preserve the scheduled rest periods, creating a cascading chain of delays.

Endeavor Airlines provided a chart indicating that compliance with the increased rest period would result in initial costs of $205,000 and recurring costs of $203,800, based on their estimates for 2020, 2021, and 2022. It stated that because planned rest must increase, less daily activity would be scheduled, driving fewer days off. It also indicated that the increased rest would drive increased costs for software, new hires, and training.

AFA and IBT stated that multiple airlines have already included the additional rest that would result from the rule change required by section

335(a) in their contracts. AFA and IBT further state that these airlines have implemented the additional rest quickly and without incurring additional costs, and that the argument that the increased rest is too costly and difficult to implement is without merit. APFA, IAM, and TWU stated that it is unlikely that certificate holders would undertake any significant costs in implementing a change to a 10-hour minimum rest period for flight attendants. These commenters stated while some airlines claim possible additional costs, the vast majority of flight attendants are guaranteed approximately 10 hours of rest today under their existing terms of work. They also mentioned that costs of compliance would be minimal, as major certificate holders making up over 90 percent of total available seat miles of certificate holders affected by the proposed rule already schedule their crews with at least 10 hours of rest between shifts. TTD stated that current scheduling, operations, and training practices, combined with the fact that a number of certificate holders currently operate with 10-hour rest periods, means that costs incurred by certificate holders are likely to be tempered. TTD expressed skepticism that the rulemaking would qualify as an economically significant rule.

The FAA carefully analyzed the varied comments received on the economic impact of the required rulemaking. In the course of analyzing these comments to the ANPRM, the FAA determined it needed additional, individualized data. As a result, after the ANPRM comment period closed, the FAA conducted additional outreach as discussed later in this preamble.

Implementation

Many commenters expressed concern that the FAA is past due on rulemaking and implementation of the section 335(a) mandate. APFA, IAM, and TWU stated that delay in implementation is inconsistent with Congressional requirements and that flight attendants deserved more rest, noting the physically demanding aspects of flight attendant duties. TTD endorsed the comments filed by APFA, IAM, and TWU and called on the FAA to proceed immediately with an interim final rule to implement the flight attendant duty period and rest requirements mandated by the FAARA 2018, stating that the FAA must not create artificial impediments to the promulgation of this urgently needed regulatory change. TTD stated that even if the FAA determines that the proposed rule is economically significant, that determination should have no impact on expeditiously publishing a final rule. TTD further stated that by taking aggressive action to apply these fatigue protections, the FAA can swiftly improve the safety and security of the aviation system. ALPA indicated that it understood that the majority of U.S. flight attendants either currently receive 10 hours of rest or would receive such rest by the time the FAA issues a final rule, and that delay in implementing the rest requirement is not acceptable in view of aviation safety and security.

AFA and other commenters stated they assumed the FAA would allow a six-month implementation period. AFA noted that after the FAA published the ANPRM (September 2019), Delta Airlines announced its plans to implement the new rest period in February 2020. AFA asserted that Delta's actions show that certificate holders can implement the new provisions in a few months' time. A4A, however, recommended the FAA propose and adopt an implementation period of at least 12 months to reduce costs.

Section 335(a) required the FAA, in a narrow timeframe, to modify an existing final rule to require that flight attendants receive increased rest. The FAA is implementing this rulemaking requirement consistent with the Administrative Procedure Act and DOT Order 2100.6A, Rulemaking and Guidance Procedures. Regarding comments addressing the compliance period, an extended implementation period would be inconsistent with the intent of this statutory mandate. Moreover, the FAA expects that a delay in the compliance period would only delay the realization of both benefits and costs. Additionally, a delay in the compliance period of less than a full year would be imperceptible in the monetized cost estimates.

Additional Outreach

The FAA received only limited quantitative information from certificate holders estimating costs in response to the questions contained in the ANPRM. A4A provided aggregated data, but the FAA needed individualized data to complete its regulatory impact analysis of the regulatory change required by section 335(a). Therefore, after the comment period for the ANPRM closed, the FAA conducted additional outreach to nine air carrier certificate holders that would be subject to the amended requirements. The FAA's outreach focused on the current amount of rest the certificate holder provided flight attendants; the impacts from implementing the statutorily mandated rest; and barriers to implementing the statutorily mandated rest. The FAA was able to gather sufficient data to assess the anticipated impacts of requiring the increased rest. Due to the proprietary and confidential nature of the information collected from certificate holders, the FAA has published this information as aggregated summary results. This NPRM and the regulatory evaluation for this proposed rule, however, summarize the correspondence with certificate holders and the information the FAA received from certificate holders to the extent necessary to inform the public of the bases for its proposed determinations in the regulatory evaluation.

IV. Discussion of the Proposal

Currently, certificate holders conducting domestic, flag, and supplemental operations must fulfill the flight attendant duty period limitations and rest requirements in 14 CFR 121.467. Paragraph (b) of § 121.467 provides that a flight attendant scheduled to a duty period of 14 hours or less must be given a scheduled rest period of at least nine consecutive hours. This rest period must occur between the completion of the scheduled duty period and the commencement of the subsequent duty period. The certificate holder may schedule or reduce the rest period to eight consecutive hours if the certificate holder provides a subsequent rest period of at least 10 consecutive hours that is scheduled to begin no later than 24 hours after the beginning of the reduced rest period.

Section 335(a) of the FAARA 2018 requires ''[modification of] the final rule'' [6] relating to flight attendant duty period limitations and rest requirements to ''ensure that—(A) a flight attendant scheduled to a duty period of 14 hours or less is given a scheduled rest period of at least 10 consecutive hours; and (B) the rest period is not reduced under any circumstances.'' Consistent with the requirement of section 335(a) of the FAARA 2018, the proposed rule would amend § 121.467(b)(2) and (b)(3) to require certificate holders operating under part 121 to provide 10 hours of consecutive rest for flight attendants scheduled to a duty period of 14 hours or less, remove the allowance for a reduction in rest, and explicitly prohibit

[6] Section 335(a)(1) requires modification of ''the final rule of the Federal Aviation Administration published in the **Federal Register** on August 19, 1994 (59 FR 42974; relating to flight attendant duty period limitations and rest requirements) in accordance with the requirements of this subsection.'' The citation to the **Federal Register** publication refers to the final rule implementing the flight attendant duty period limitations and rest requirements of § 121.467.

a reduction in the 10 hours of rest. For the reasons described in the FAA's response to ANPRM comments on implementation, certificate holders would be required to comply with the proposed rule upon the effective date, 30 days after publication of the final rule in the **Federal Register**.

V. Regulatory Notices and Analyses

Federal agencies consider impacts of regulatory actions under a variety of executive orders and other requirements. First, Executive Order 12866 and Executive Order 13563 direct that each Federal agency shall propose or adopt a regulation only upon a reasoned determination that the benefits of the intended regulation justify the costs. Second, the Regulatory Flexibility Act of 1980 (Pub. L. 96–354) requires agencies to analyze the economic impact of regulatory changes on small entities. Third, the Trade Agreements Act (Pub. L. 96–39) prohibits agencies from setting standards that create unnecessary obstacles to the foreign commerce of the United States. Fourth, the Unfunded Mandates Reform Act of 1995 (Pub. L. 104–4) requires agencies to prepare a written assessment of the costs, benefits, and other effects of proposed or final rules that include a Federal mandate that may result in the expenditure by State, local, and tribal governments, in the aggregate, or by the private sector, of $100,000,000 or more (adjusted annually for inflation) in any one year. The current threshold after adjustment for inflation is $158,000,000, using the most current (2020) Implicit Price Deflator for the Gross Domestic Product. The FAA has provided a detailed Regulatory Impact Analysis (RIA) in the docket for this rulemaking. This portion of the preamble summarizes the FAA's analysis of the economic impacts of this proposed rule.

In conducting these analyses, the FAA has determined that this proposed rule: Is a ''significant regulatory action'' as defined in section 3(f) of Executive Order 12866; may have a significant economic impact on a substantial number of small entities; will not create unnecessary obstacles to the foreign commerce of the United States; and will not impose an unfunded mandate on State, local, or tribal governments, or on the private sector.

A. Regulatory Impact Analysis

This section provides a summary of the FAA's Regulatory Impact Analysis (RIA). Please see the RIA available in the docket for the rulemaking for more details.

Baseline for the Analysis

The baseline for analysis of the incremental benefits and costs of the proposed rule includes the regulations regarding flight attendant rest and existing practices, the affected entities and flight attendants, and potential safety and health risks. Again, note that the baseline presented in this document predates the coronavirus (COVID–19) public health emergency. It is possible that when the rulemaking becomes final, the actual conditions for certificate holders may differ from the information collected prior to the public health emergency.

Currently, certificate holders conducting domestic, flag, or supplemental operations under 14 CFR part 121 must provide a flight attendant scheduled to a duty period of 14 hours or less a scheduled rest period of at least 9 consecutive hours. The certificate holder may schedule or reduce the rest period to eight consecutive hours if the certificate holder provides a subsequent rest period of at least 10 consecutive hours that is scheduled to begin no later than 24 hours after the beginning of the reduced rest period. In response to the FAARA 2018 and other circumstances (including that some airlines schedule flight attendants to be synchronized with those for pilots), 12 certificate holders already schedule flight attendants for 10 hours of rest. The provision may be reflected in a certificate holder's collective bargaining agreement with the flight attendant union.

The FAA's Safety Performance Analysis System (SPAS) contains information on certificate holders conducting operations under part 121 and the number of flight attendants. Table 1 provides a summary by category of carrier.[7]

TABLE 1—UNIVERSE OF AFFECTED ENTITIES AND FLIGHT ATTENDANTS

Category	Number of certificate holders	Total number of flight attendants	Average number of flight attendants per certificate holder
Major	4	91,420	22,855
National	13	21,805	1,677
Passenger and Cargo	5	703	141
Regional	21	14,196	676
Total	43	128,124	2,980

NVIS = National Vital Information System.
SPAS = Safety Performance Analysis System.
Source: FAA Safety Performance Analysis System (SPAS), SPAS NVIS Air Operator—12/05/2019.

Bureau of Transportation Statistics data indicate that flight attendants serve hundreds of millions of passengers on close to 10 million flights annually in the United States.[8] Flight attendants perform safety and security functions while on duty in addition to serving customers. Voluntary reports submitted by flight attendants to the Aviation Safety Reporting System indicate the potential for fatigue to be associated with poor performance of safety and

[7] SPAS categories are as follows: Majors: Fleet does not contain any ''Cargo Only'' configured aircraft; and greater than 25 percent of fleet are aircraft configured with maximum passenger capacity greater than or equal to 100 seats, and fleet size is greater than or equal to 400. Nationals: Fleet does not contain any ''Cargo Only'' configured aircraft, and greater than 25 percent of fleet are aircraft configured with maximum passenger capacity greater than or equal to 100 seats, and fleet size is less than 400. Regionals: Fleet does not contain any ''Cargo Only'' configured aircraft, and greater than or equal to 75 percent of fleet are aircraft configured with maximum passenger capacity less than 100 seats. Passenger and Cargo Only: Fleet includes ''Passenger configured'' aircraft and ''Cargo Only'' configured aircraft.

[8] Bureau of Transportation Statistics T–100 Segment (flights) and Market (passengers) data. Available online at *www.BTS.gov.*

security related tasks. For example, in 2017, a flight attendant reported almost causing the gate agent to deploy a slide, which he/she attributed to, among other causes, having been fatigued.[9] Additional examples of voluntary reports regarding flight attendant fatigue are included in the RIA. Other reports included poor response to a passenger incident and feeling pressure to work despite being fatigued.

Benefits

The benefits of the proposed regulation would include reductions in safety risks, and any improvements in flight attendant health, that may be associated with the increase in flight attendant minimum rest periods. Flight attendants must be prepared to respond quickly to emergencies including evacuations, crash impacts, post-crash or inflight fires, ditching,[10] runway over runs, security events, and similar situations. Commenters on the ANPRM note that the scientific bases for fatigue impacts on task performance are well understood, although the specific impact to flight attendant task performance has not been well-studied. Benefits of increasing the minimum flight attendant rest period may accrue through reduced safety risks. However, as discussed in additional detail in the RIA, any reductions in safety risk are likely to be small since they would also depend on the frequency which safety-oriented tasks occur, and currently U.S. air carriers experience very few accidents resulting in death or serious injury. Additionally, given the potential impact of fatigue on health, the proposed rule could also result in health benefits for flight attendants.

The FAA does not have sufficient data to estimate a baseline level of safety risk associated with flight attendant fatigue. In addition, it is also difficult to estimate (and the FAA does not have data on) the impact of the proposed rule in reducing flight attendant fatigue-related performance errors (*i.e.,* how outcomes will differ compared to under the current rest period). Similarly, because multiple factors affect flight attendant health, it is difficult to identify health risks specifically attributable to rest period-related fatigue and the impact of the proposed rest requirement in reducing that risk.

Costs

The FAA used data that it collects from certificate holders conducting operations under part 121 and information submitted in response to the ANPRM, as supplemented or verified through additional outreach, to estimate the costs that may be associated with the proposed rule. To better understand the ANPRM responses, the FAA conducted additional outreach to three major, three national, and three regional certificate holders in January and February 2020. This effort assisted in applying the ANPRM comment responses to estimate costs.

The FAA used this data and information to estimate incremental costs, including new hires of flight attendants, onboarding, training, travel, and modifying crew scheduling software. As some of these certificate holders implemented the proposed rest requirement around the time the FAARA 2018 was enacted or shortly thereafter, uncertainty exists regarding whether implementation occurred due to anticipation of the required rule change or other business reasons independent of regulatory action. Therefore, the FAA measures the costs of the proposed rule from two baselines to capture the different levels of incremental effects attributable to the rule, consistent with the Office of Management and Budget's (OMB) guidelines: [11]

- Existing practices baseline—certificate holder practices at the time of the proposed rule.
- Pre-statutory baseline—certificate holder practices at the time of the FAARA 2018.[12]

Table 2 shows the affected entities by category in each baseline scenario and the current number of flight attendants.

TABLE 2—POTENTIALLY AFFECTED ENTITIES

Category	Number of certificate holders with incremental costs	Number of flight attendants
Existing Practices Baseline:		
Major	2	41,217
National	11	19,458
Passenger and Cargo	4	437
Regional	14	6,152
Total	31	67,264
Pre-statutory Baseline:		
Major	4	91,420
National	12	21,674
Passenger and Cargo	5	739
Regional	15	6,208
Total	36	120,041

1. The number of affected certificate holders does not equal the universe (total number) of certificate holders under both baselines because some carriers have implemented the rest for other reasons (*e.g.,* regional carriers scheduling flight attendants with pilots).

Table 3 provides the estimates of annualized and present value costs using both baselines. The key factor influencing the magnitude of the costs is the selection of the relevant baseline for the analysis. Note that uncertainties

[9] See Aviation Safety Reporting System Database Online (*https://asrs.arc.nasa.gov/search/database.html*) report 1452656 from May 2017.

[10] Refers to crash-landing into water an aircraft not designed for the purpose.

[11] The OMB's 2003 guidance on regulatory analysis, Circular A–4, is available online at: *https://obamawhitehouse.archives.gov/omb/circulars_a004_a-4/.*

[12] OMB Circular A–4 requires agencies to use a pre-statutory baseline for regulatory analysis of statutory requirements (pp. 15 and 16): ''In some cases, substantial portions of a rule may simply restate statutory requirements that would be self-implementing, even in the absence of the regulatory action. In these cases, you [the agency] should use a pre-statute baseline.''

exist regarding the characterization of both baselines, as the FAA does not have complete information on existing practices or recent changes that carriers have made as a result of the FAARA 2018 or in anticipation of the rule. In addition, with respect to hires, it can be difficult to differentiate impacts due to a requirement to provide 10 hours of rest that cannot be reduced and other factors including growth or other trends. The outreach effort confirmed that the type of operations, which are specific to each certificate holder, affect the impacts.

TABLE 3—SUMMARY OF ESTIMATED COSTS

[Millions]

Discount rate	Annualized cost	5-year present value
Existing Practices Baseline:		
7%	$67.5	$277.0
3%	67.3	308.3
Pre-statutory Baseline:		
7%	117.9	483.5
3%	117.7	538.9

Table 4 provides a breakout by category of certificate holder (for the seven percent discount rate scenario). The FAA modeled costs per certificate holder as a function of the certificate holder's size (number of flight attendants). Table 5 shows the estimated increases in flight attendants across categories by baseline scenario. These results are based on the hiring needs identified by commenters that responded to the ANPRM. However, the FAA acknowledges that the input values may not be sufficiently representative of the different certificate holders in each category.

TABLE 4—ANNUALIZED COSTS BY CATEGORY OF CERTIFICATE HOLDER

[Millions, 7% discount rate]

Category	Number of certificate holders	Annualized cost	Average annualized cost per certificate holder
Existing Practices Baseline:			
Major	2	$45.3	$22.7
National	11	17.6	1.6
Passenger and Cargo	4	0.3	0.1
Regional	14	4.2	0.3
Total	31	67.5	2.2
Pre-statutory Baseline:			
Major	4	93.6	23.4
National	12	19.6	1.5
Passenger and Cargo	5	0.5	0.1
Regional	15	4.2	0.2
Total	36	117.9	2.7

TABLE 5—ESTIMATED HIRING BY CATEGORY OF CERTIFICATE HOLDER

Category	Number of certificate holder	Increase in flight attendants
Existing Practices Baseline:		
Major	2	377
National	11	149
Passenger and Cargo	4	3
Regional	14	36
Total	31	565
Pre-statutory Baseline:		
Major	4	836
National	12	166
Passenger and Cargo	5	4
Regional	15	36
Total	36	1,043

Uncertainty

There are a number of uncertainties in the analysis. The hiring response by major certificate holders has potentially the largest impact on costs. The FAA is also uncertain about the extent to which airlines use flexible scheduling, and requests data and information from the public regarding how flexible scheduling is used. For example, reducing the hiring assumption for these certificate holders by half reduces estimated costs by over 30 percent. A key uncertainty exists regarding any lingering or lasting changes to the industry following the COVID–19 public health emergency and the impact on benefits and costs.

B. Regulatory Flexibility Act

The Regulatory Flexibility Act (RFA) of 1980, Public Law 96–354, 94 Stat. 1164 (5 U.S.C. 601–612), as amended by the Small Business Regulatory Enforcement Fairness Act of 1996 (Pub. L. 104–121, 110 Stat. 857, Mar. 29, 1996) and the Small Business Jobs Act of 2010 (Pub. L. 111–240, 124 Stat. 2504 Sept. 27, 2010), requires Federal agencies to consider the effects of the regulatory action on small business and other small entities and to minimize any significant economic impact. The term ''small entities'' comprises small businesses and not-for-profit organizations that are independently owned and operated and are not dominant in their fields, and governmental jurisdictions with populations of less than 50,000.

The FAA is publishing this Initial Regulatory Flexibility Analysis (IRFA) to aid the public in commenting on the potential impacts to small entities from this proposal. The FAA invites interested parties to submit data and information regarding the potential economic impact that would result from the proposal. The FAA will consider comments when making a determination or when completing a Final Regulatory Flexibility Assessment. An IRFA contains the following:

(1) A description of the reasons why the action by the agency is being considered;

(2) A succinct statement of the objective of, and legal basis for, the proposed rule;

(3) A description of and, where feasible, an estimate of the number of small entities to which the proposed rule will apply;

(4) A description of the projected reporting, recordkeeping, and other compliance requirements of the proposed rule, including an estimate of the classes of small entities which will be subject to the requirement and the type of professional skills necessary for preparation of the report or record;

(5) An identification, to the extent practicable, of all relevant Federal rules that may duplicate, overlap, or conflict with the proposed rule; and

(6) A description of any significant alternatives to the proposed rule which accomplish the stated objectives of applicable statutes and which minimize any significant economic impact of the proposed rule on small entities.

Reasons the Action Is Being Considered

On October 5, 2018, Congress enacted the FAARA 2018. Section 335(a) of the FAARA 2018 requires modification of the flight attendant duty period limitations and rest requirements to ''ensure that—(A) a flight attendant scheduled to a duty period of 14 hours or less is given a scheduled rest period of at least 10 consecutive hours; and (B) the rest period is not reduced under any circumstances.'' On September 25, 2019, the FAA published an ANPRM to solicit input from the public on the regulatory impact of the mandated changes. The proposed rulemaking, if finalized, would modify the flight attendant duty period limitations and rest requirements as required by the FAARA 2018.

Objectives of the Proposed Rule

This proposed rule would modify the flight attendant duty period limitations and rest requirements in 14 CFR 121.467 consistent with the requirements of the FAARA 2018. As such, the minimum rest period for a flight attendant scheduled for a duty period of 14 hours would increase from at least 9 consecutive hours to at least 10 consecutive hours. The FAA would also remove the ability of the certificate holder to reduce the rest period that current regulations allow. This proposed rule would fulfill the statutory requirement to provide flight attendants additional rest, which certificate holders would not be permitted to reduce.

Description and Estimate of the Number of Small Entities

The FAA used the definition of small entities in the RFA for this analysis. The RFA defines small entities as small businesses, small governmental jurisdictions, or small organizations. In 5 U.S.C. 601(3), the RFA defines ''small business'' to have the same meaning as ''small business concern'' under section 3 of the Small Business Act. The Small Business Act authorizes the Small Business Administration (SBA) to define ''small business'' by issuing regulations.

The SBA established size standards for various types of economic activities, or industries, under the North American Industry Classification System (NAICS).[13] These size standards generally define small businesses based on the number of employees or annual receipts. Table 6 shows the SBA size standards for certificate holders as an example. Note that the SBA definition of a small business applies to the parent company and all affiliates as a single entity.

TABLE 6—SMALL BUSINESS SIZE STANDARDS: AIR TRANSPORTATION

NAICS code	Description	SBA size standard
481111	Scheduled Passenger Air Transportation	1,500 employees.
481112	Scheduled Freight Air Transportation	1,500 employees.
481211	Nonscheduled Chartered Passenger Air Transportation	1,500 employees.
481212	Nonscheduled Chartered Freight Air Transportation	1,500 employees.
481219	Other Nonscheduled Air Transportation	$16.5 million.

Certificate holders affected by the proposed requirements for flight attendant rest are those authorized to conduct operations under 14 CFR part 121. To identify small entities, the FAA first identified the primary NAICS of the certificate holder or parent company, and then used data from different sources (*e.g.,* company annual reports, Bureau of Transportation Statistics) to determine whether the certificate holder meets the applicable size standard.

[13] Small Business Administration (SBA) Table of Size Standards. Effective August 12, 2019. *https://www.sba.gov/document/support--table-size-standards.*

Table 7 provides a summary of the estimated number of small entities to which this proposed rule would apply.

TABLE 7—ESTIMATED NUMBER OF SMALL ENTITIES

Category	Number of entities	Number small entities	Percent small entities
Major	4	0	0
National	13	4	31
Passenger and Cargo	5	2	40
Regional	21	4	19
Total	43	10	23

Projected Reporting, Recordkeeping, and Other Compliance Requirements

No new recordkeeping or reporting requirements are associated with the proposed rule. Small entity compliance with the proposed rule might entail hiring additional flight attendants, providing initial and recurring training, travel and per diem costs, and modifying software. In addition, costs might result from updating procedural manuals.

Table 8 shows the estimated annualized compliance costs by category and the number of small entities in each category. Based on average compliance costs, impacts do not appear disproportionate to small entities. Also, regional certificate holders, which account for four of the identified small entities, may be less likely affected by the proposed rule due to scheduling flight attendants with pilots. To the extent that small entities provide more unique services or serve markets with less competition, these entities might be able to pass on costs in the form of price increases.

TABLE 8—AVERAGE COST OF COMPLIANCE AND SMALL ENTITIES

Category	Number of small entities	Average annualized cost per certificate holder (millions) [1]
Major	0	$22.7
National	4	$1.6
Passenger and Cargo	2	$0.1
Regional	4	$0.3

[1] Based on a baseline of existing practices and using a 7% discount rate.

All Federal Rules That May Duplicate, Overlap, or Conflict

There are no relevant Federal rules that may duplicate, overlap, or conflict with the proposed rule.

Significant Alternatives Considered

The FAA considered conducting a comprehensive review and revision of the flight attendant duty and rest regulations, similar to revisions the FAA made in the *Flightcrew Member Duty and Rest Requirements* rule. 77 FR 330 (Jan. 4, 2012). The FAA rejected this alternative because of the narrow scope of the statutory mandate for rulemaking. Additionally, the FAA lacks data-based rationale that indicates a comprehensive update is necessary. Also, increased comprehensive or stringent requirements could add burden rather than reduce burden on small entities.

Section 335(a) contains instruction on specific, prescriptive amendments to the existing rest requirement. Any lower-cost alternatives would contravene the statute. Therefore, the FAA did not identify or consider any lower-cost alternatives to the statutory mandate.

C. International Trade Impact Assessment

The Trade Agreements Act of 1979 (Pub. L. 96–39), as amended by the Uruguay Round Agreements Act (Pub. L. 103–465), prohibits Federal agencies from establishing standards or engaging in related activities that create unnecessary obstacles to the foreign commerce of the United States. Pursuant to these Acts, the establishment of standards is not considered an unnecessary obstacle to the foreign commerce of the United States, so long as the standard has a legitimate domestic objective, such as the protection of safety and does not operate in a manner that excludes imports that meet this objective. The statute also requires consideration of international standards and, where appropriate, that they be the basis for U.S. standards. The requirements of this proposed rule would not create an obstacle to foreign commerce because they would apply only to flight attendants serving in operations conducted by U.S.-certificate holders conducting operations under part 121.

D. Paperwork Reduction Act

In accordance with the Paperwork Reduction Act, 44 U.S.C. 3501 *et seq.,* 5 CFR 1320.8(d) requires that the FAA provide interested members of the public and affected agencies an opportunity to comment on information collection and recordkeeping requests. This action does not impose new information collection requirements as defined in 14 CFR part 1320.

E. Unfunded Mandates Reform Act of 1995

The Unfunded Mandates Reform Act of 1995 (2 U.S.C. 1531–1538) governs the issuance of Federal regulations that require unfunded mandates. An unfunded mandate is a regulation that requires a State, local, or tribal government or the private sector to

incur direct costs without the Federal government having first provided the funds to pay those costs. The FAA determined that the proposed rule to address section 335(a) of the FAARA 2018 would not result in costs of $155 million or more, adjusted for inflation, to either State, local, or tribal governments, in the aggregate, or to the private sector in any one year.

F. International Compatibility

In keeping with U.S. obligations under the Convention on International Civil Aviation, it is FAA policy to conform to ICAO Standards and Recommended Practices to the maximum extent practicable. The FAA has reviewed the corresponding ICAO Standards and Recommended Practices and has identified no differences with these proposed regulations.

G. Environmental Analysis

FAA Order 1050.1F identifies FAA actions that are categorically excluded from preparation of an environmental assessment or environmental impact statement under NEPA in the absence of extraordinary circumstances. The FAA has determined this rulemaking action qualifies for the categorical exclusion identified in paragraph 5–6.6f, and that no extraordinary circumstances exist.

VI. Executive Order Determinations

A. Executive Order 12866 and Executive Order 13563

The FAA has determined this action is a significant regulatory action under section 3(f) of Executive Order 12866 that would be reviewed by the Office of Management and Budget (OMB). The rulemaking is also a significant regulatory action under DOT Order 2100.6A ''Rulemaking and Guidance Procedures,'' issued by the Department of Transportation on June 7, 2021.

Executive Orders 12866, ''Regulatory Planning and Review,'' 58 FR 51735 (Oct. 4, 1993), and 13563, ''Improving Regulation and Regulatory Review,'' 76 FR 3821 (Jan. 21, 2011), require agencies to regulate in the ''most cost-effective manner,'' to make a ''reasoned determination that the benefits of the intended regulation justify its costs,'' and to develop regulations that ''impose the least burden on society.'' Executive Order 13610, ''Identifying and Reducing Regulatory Burdens,'' 77 FR 28469 (May 14, 2012), urges agencies to conduct retrospective analyses of existing rules to examine whether they remain justified and whether they should be modified or streamlined in light of changed circumstances, including the rise of new technologies.

Additionally, Executive Orders 12866, 13563, and 13610 require agencies to provide a meaningful opportunity for public participation. Accordingly, the FAA invites comments on these considerations, including any cost or benefit figures or factors, alternative approaches, and relevant scientific, technical and economic data.

B. Executive Order 13132, Federalism

Executive Order 13132, ''Federalism,'' 64 FR 43255 (Aug. 10, 1999), requires agencies to assure meaningful and timely input by State and local officials in the development of regulatory policies that may have ''substantial direct effects on the States, on the relationship between the national government and the States, or on the distribution of power and responsibilities among the various levels of government.'' The Agency has determined that this action would not have a substantial direct effect on the States, or the relationship between the Federal Government and the States, or on the distribution of power and responsibilities among the various levels of government, and, therefore, would not have Federalism implications.

C. Executive Order 13175, Consultation and Coordination With Indian Tribal Governments

Consistent with Executive Order 13175, ''Consultation and Coordination with Indian Tribal Governments,'' and FAA Order 1210.20, ''American Indian and Alaska Native Tribal Consultation Policy and Procedures,'' the FAA ensures that Federally Recognized Tribes (Tribes) are given the opportunity to provide meaningful and timely input regarding proposed Federal actions that have the potential to uniquely or significantly affect their respective Tribes. At this point, the FAA has not identified any unique or significant effects, environmental or otherwise, on tribes resulting from this proposed rule.

D. Executive Order 13609, Promoting International Regulatory Cooperation and International Trade Analysis

Under Executive Order 13609, ''Promoting International Regulatory Cooperation,'' 77 FR 26413 (May 4, 2012), agencies must consider whether the impacts associated with significant variations between domestic and international regulatory approaches are unnecessary or may impair the ability of American businesses to export and compete internationally. In meeting shared challenges involving health, safety, labor, security, environmental, and other issues, regulatory approaches developed through international cooperation can provide equivalent protection to standards developed independently while also minimizing unnecessary differences.

VII. Additional Information

A. Comments Invited

The FAA invites interested persons to participate in this rulemaking by submitting written comments, data, or views. The Agency also invites comments relating to the economic, environmental, energy, or federalism impacts that might result from adopting the proposals in this document. The most helpful comments reference a specific portion of the proposal, explain the reason for any recommended change, and include supporting data. To ensure the docket does not contain duplicate comments, commenters should send only one copy of written comments, or if comments are filed electronically, commenters should submit only one time.

The FAA will file in the docket all comments it receives, as well as a report summarizing each substantive public contact with FAA personnel concerning this proposed rulemaking. Before acting on this proposal, the FAA will consider all comments it receives on or before the closing date for comments. The FAA will consider comments filed after the comment period has closed if it is possible to do so without incurring expense or delay. The Agency may change this proposal in light of the comments it receives.

B. Confidential Business Information

Confidential Business Information (CBI) is commercial or financial information that is both customarily and actually treated as private by its owner. Under the Freedom of Information Act (FOIA) (5 U.S.C. 552), CBI is exempt from public disclosure. If your comments responsive to this NPRM contain commercial or financial information that is customarily treated as private, that you actually treat as private, and that is relevant or responsive to this NPRM, it is important that you clearly designate the submitted comments as CBI. Please mark each page of your submission containing CBI as ''PROPIN.'' The FAA will treat such marked submissions as confidential under the FOIA, and they will not be placed in the public docket of this NPRM. Submissions containing CBI should be sent to the person in the **FOR FURTHER INFORMATION CONTACT** section of this document. Any commentary that the FAA receives which is not specifically designated as CBI will be

placed in the public docket for this rulemaking.

C. Electronic Access and Filing

A copy of the ANPRM, NPRM, all comments received, any final rule, and all background material may be viewed online at *https://www.regulations.gov* using the docket number listed above. A copy of this proposed rule will be placed in the docket. Electronic retrieval help and guidelines are available on the website. It is available 24 hours each day, 365 days each year. An electronic copy of this document may also be downloaded from the Office of the Federal Register's website at *https://www.federalregister.gov* and the Government Publishing Office's website at *https://www.govinfo.gov.* A copy may also be found at the FAA's Regulations and Policies website at *https://www.faa.gov/regulations_policies.*

Copies may also be obtained by sending a request to the Federal Aviation Administration, Office of Rulemaking, ARM–1, 800 Independence Avenue SW, Washington, DC 20591, or by calling (202) 267–9677. Commenters must identify the docket or notice number of this rulemaking.

All documents the FAA considered in developing this proposed rule, including economic analyses and technical reports, may be accessed in the electronic docket for this rulemaking.

List of Subjects in 14 CFR Part 121

Air carriers, Aviation safety, Safety, Transportation.

The Proposed Amendment

For the reasons set forth in the preamble, the Federal Aviation Administration proposes to amend chapter I of title 14, Code of Federal Regulations as follows:

PART 121—OPERATING REQUIREMENTS: DOMESTIC, FLAG, AND SUPPLEMENTAL OPERATIONS

■ 1. The authority citation for part 121 is revised to read as follows:

Authority: 49 U.S.C. 106(f), 106(g), 40103, 40113, 40119, 41706, 42301 preceding note added by Pub. L. 112–95, sec. 412, 126 Stat. 89, 44101, 44701–44702, 44705, 44709–44711, 44713, 44716–44717, 44722, 44729, 44732; 46105; Pub. L. 111–216, 124 Stat. 2348 (49 U.S.C. 44701 note); Pub. L. 112–95, 126 Stat 62 (49 U.S.C. 44732 note); Pub. L. 115–254, 132 Stat 3186 (49 U.S.C. 44701 note).

■ 2. Amend § 121.467 by revising paragraphs (b)(2) and (3) to read as follows:

§ 121.467 Flight attendant duty period limitations and rest requirements: Domestic, flag, and supplemental operations.

* * * * *

(b) * * *

(2) A flight attendant scheduled to a duty period of 14 hours or less as provided under paragraph (b)(1) of this section must be given a scheduled rest period of at least 10 consecutive hours. This rest period must occur between the completion of the scheduled duty period and the commencement of the subsequent duty period.

(3) The rest period required under paragraph (b)(2) of this section may not be reduced to less than 10 consecutive hours.

* * * * *

Issued in Washington, DC, under authority provided by 49 U.S.C. 106(f) and 44701(a)(5) on October 20, 2021.

Steve Dickson,

Administrator, Federal Aviation Administration.

[FR Doc. 2021–23253 Filed 11–1–21; 8:45 am]

BILLING CODE 4910–13–P

ENVIRONMENTAL PROTECTION AGENCY

40 CFR Part 52

[EPA–R08–OAR–2020–0644; FRL–9164–01–R8]

Approval and Promulgation of Implementation Plans; Colorado; Denver Metro/North Front Range Nonattainment Area; Nonattainment NSR Permit Program Certification for the 2015 8-Hour Ozone Standard

AGENCY: Environmental Protection Agency (EPA).

ACTION: Proposed rule.

SUMMARY: The Environmental Protection Agency (EPA) is proposing to approve a state implementation plan (SIP) revision submitted by the State of Colorado. The revision certifies that the State of Colorado has fulfilled, through a previous SIP revision, Nonattainment New Source Review (NNSR) Permit Program requirements under the 2015 8-hour ozone National Ambient Air Quality Standards (NAAQS) for the Denver Metro/North Front Range (DMNFR) area. The State of Colorado submitted the appropriate certification to meet the nonattainment requirements for Marginal ozone nonattainment areas (NAAs) for the 2015 8-hour ozone NAAQS. The EPA is taking this action pursuant to sections 110, 172, and 173 of the Clean Air Act (CAA).

DATES: Written comments must be received on or before December 2, 2021.

ADDRESSES: Submit your comments, identified by Docket ID No. EPA–R08–OAR–2020–0644, to the Federal Rulemaking Portal: *https://www.regulations.gov.* Follow the online instructions for submitting comments. Once submitted, comments cannot be edited or removed from *www.regulations.gov.* The EPA may publish any comment received to its public docket. Do not submit electronically any information you consider to be Confidential Business Information (CBI) or other information whose disclosure is restricted by statute. Multimedia submissions (audio, video, etc.) must be accompanied by a written comment. The written comment is considered the official comment and should include discussion of all points you wish to make. The EPA will generally not consider comments or comment contents located outside of the primary submission (*i.e.,* on the web, cloud, or other file sharing system). For additional submission methods, the full EPA public comment policy, information about CBI or multimedia submissions, and general guidance on making effective comments, please visit *http://www2.epa.gov/dockets/commenting-epa-dockets.*

Docket: All documents in the docket are listed in the *www.regulations.gov* index. Although listed in the index, some information is not publicly available, *e.g.,* CBI or other information whose disclosure is restricted by statute. Certain other material, such as copyrighted material, will be publicly available only in hard copy. Publicly available docket materials are available electronically in *www.regulations.gov.* To reduce the risk of COVID–19 transmission, for this action we do not plan to offer hard copy review of the docket. Please email or call the person listed in the **FOR FURTHER INFORMATION CONTACT** section if you need to make alternative arrangements for access to the docket.

FOR FURTHER INFORMATION CONTACT: Matthew Lang, Air and Radiation Division, EPA, Region 8, Mailcode 8ARD–IO, 1595 Wynkoop Street, Denver, Colorado 80202–1129, (303) 312–6709, *lang.matthew@epa.gov.*

SUPPLEMENTARY INFORMATION: Throughout this document wherever ''we,'' ''us,'' or ''our'' is used, we mean the EPA.

I. Background

Ground-level ozone is formed when nitrogen oxides (NO_X) and volatile organic compounds (VOCs) react in the

presence of sunlight. Referred to as ozone precursors, these two pollutants are emitted by many types of pollution sources, including motor vehicles, power plants, industrial facilities, and area wide sources, such as consumer products and lawn and garden equipment. Scientific evidence indicates that adverse public health effects occur following a person's exposure to ozone. These effects are more pronounced in children and adults with lung disease. Breathing air containing ozone can reduce lung function and inflame airways, which can increase respiratory symptoms and aggravate asthma or other lung diseases. In 1979, in response to this scientific evidence, the EPA promulgated the first ozone NAAQS, the 0.12 part per million (ppm) 1-hour ozone NAAQS.[1] The EPA had previously promulgated a NAAQS for total photochemical oxidants.

On July 18, 1997, the EPA promulgated a revised ozone NAAQS of 0.08 ppm, averaged over eight hours.[2] This standard was determined to be more protective of public health than the previous 1979 1-hour ozone standard. In 2008, the EPA revised the 8- hour ozone NAAQS from 0.08 to 0.075 ppm.[3] On October 26, 2015, the EPA strengthened the ground-level ozone NAAQS to 0.070 ppm, based on extensive scientific evidence about ozone's effects on public health and welfare.[4] Effective August 3, 2018, the DMNFR area was designated as Marginal nonattainment for the more stringent 2015 8-hour ozone NAAQS.[5] The DMNFR NAA is comprised of Adams, Arapahoe, Boulder, Broomfield, Denver, Douglas, Jefferson counties and portions of Larimer and Weld counties.[6]

CAA sections 172 and 182 identify requirements for ozone NAAs. Under section 172(c)(5) of the CAA Colorado is required to implement a NNSR Permit Program.[7] On July 27, 2020, through the Colorado Department of Public Health and Environment (CDPHE), Colorado submitted a SIP revision titled, ''2015 Ozone National Ambient Air Quality Standard (NAAQS)—Denver Metro/North Front Range Marginal Nonattainment Area Requirements'' to satisfy, in part, the NNSR permit program requirement under CAA section 172(c)(5).[8] Colorado met the reasonable notice and public hearing requirements of CAA section 110(a) for the SIP revision through notice in the Denver Legal Post on May 23, 2020, and a public hearing held on June 18, 2020.[9] Colorado's SIP revision also included a base year emission inventory and emission statement certification to satisfy additional Marginal nonattainment requirements under CAA sections 182(a)(1) and 182(a)(3)(B), respectively, which the EPA will act on separately from the NNSR certification that is the subject of this action.

II. Summary of SIP Revision

NNSR is a preconstruction review permit program that applies to new major stationary sources or major modifications at existing sources within a NAA and is required pursuant to CAA sections 172(c)(5) and 173.[10]

NNSR permit program requirements were adopted for the 2015 ozone NAAQS at 40 CFR 51.1314 by the implementation rule for the 2015 8-hour ozone NAAQS.[11] The minimum SIP requirements for NNSR permitting programs for the 2015 8-hour ozone NAAQS are located at 40 CFR 51.165.[12] These NNSR program requirements include those promulgated in the ''Phase 2 Rule'' implementing the 1997 8-hour ozone NAAQS, the 2008 Ozone NAAQS SIP implementation Rule, and the 2015 SIP Requirements Rule.[13] Under the Phase 2 Rule, the SIP for each ozone NAA must contain NNSR provisions that:

- Set major source thresholds for NO_X and VOCs pursuant to 40 CFR 51.165(a)(1)(iv)(A)(1)(i)–(iv) and (2);
- Classify physical changes as a major source if the change would constitute a major source by itself pursuant to 40 CFR 51.165(a)(1)(iv)(A)(3);
- Consider any significant net emissions increase of NO_X as a significant net emissions increase for ozone pursuant to 40 CFR 51.165(a)(1)(v)(E);
- Consider certain increases of VOC emissions in extreme ozone NAAs as a significant net emissions increase and a major modification for ozone pursuant to 40 CFR 51.165(a)(1)(v)(F);
- Set significant emissions rates for VOC and NO_X as ozone precursors pursuant to 40 CFR 51.165(a)(1)(x)(A)–(C) and (E);
- Contain provisions for emissions reductions credits pursuant to 40 CFR 51.165(a)(3)(ii)(C)(1)–(2);
- Provide that the requirements applicable to VOC also apply to NO_X pursuant to 40 CFR 51.165(a)(8); and
- Set offset ratios for VOC and NO_X pursuant to 40 CFR 51.165(a)(9).[14]

Colorado's SIP Revision certifies that Colorado's existing NNSR permit program, covering the DMNFR NAA for the 2015 8-hour ozone NAAQS, is at least as stringent as the minimum requirements for NNSR permitting programs for the ozone NAAQS at 40 CFR 51.165.[15] Colorado's SIP-approved NNSR program, established in the Colorado Code of Regulations (CCR), Regulation 3 Part D applies, in part, to any new major stationary source or major modification in a NAA which results in the emission of 100 tons per year or more of any NSR-regulated pollutant for which the area is nonattainment.[16] Additionally, Regulation 3 Part D specifies that a stationary source that is considered major for VOCs or NO_X will be considered major for ozone.[17] General emission offset requirements of at least a 1.1:1 in Marginal ozone NAAs pursuant to CAA section 182(a)(4) are met by Regulation 3 Part D, section V.A.3.a(i)(a).[18] The EPA last approved revisions to Colorado's SIP-approved NNSR permit program on May 3, 2019, in submitted revisions to Regulation 3, Part D.[19] Furthermore, Colorado has previously submitted, and the EPA has approved on July 3, 2018, a SIP revision certifying that the State's federally approved NNSR permit program met the requirement in 40 CFR 51.1114 under the 2008 8-hour Ozone NAAQS, with the minimum SIP requirements for NNSR permit programs located in 40

[1] Revisions to the National Ambient Air Quality Standards for Photochemical Oxidants, 44 FR 8202 (Feb. 8, 1979).

[2] National Ambient Air Quality Standards for Ozone, 62 FR 38856.

[3] National Ambient Air Quality Standards for Ozone, 73 FR 16436 (March 27, 2008).

[4] National Ambient Air Quality Standards for Ozone, 80 FR 65292.

[5] Additional Air Quality Designations for the 2015 Ozone National Ambient Air Quality Standards, 83 FR 25776 (June 4, 2018).

[6] The EPA excluded part of Weld Country from the DMNFR NAA, but that designation was remanded without vacatur in *Clean Wisconsin* v. *EPA,* 964 F.3d 1145, 1167–69, 1177 (D.C. Cir. 2020). To the extent the EPA's designation with respect to Weld County changes on remand, CO will be required to address the change in a future SIP revision.

[7] Id. 7502(c)(5).

[8] Letter dated July 6, 2020, from Jill Hunsaker Ryan, Executive Director, CDPHE, to Gregory Sopkin, Regional Administrator, EPA, Region 8 (''CO SIP Revision'').

[9] CO SIP Revision, Attachments 3 and 4.

[10] 42 U.S.C 7502(c)(5), 7503.

[11] Final Rule, Implementation of the 2015 National Ambient Air Quality Standards for Ozone: Nonattainment Area State Implementation Plan Requirements, 83 FR 62998 (Dec. 6, 2018).

[12] 40 CFR 51.1314 includes new source review requirements for the 2015 Ozone NAAQS with reference to specific requirements at 40 CFR 51.165.

[13] 70 FR 71611 (November 29, 2005); 80 FR 12164 (March 6, 2015); 83 FR 62998 (December 6, 2018).

[14] 40 CFR 51.165.

[15] CO SIP Revision, Attachments 1 and 7.

[16] 5 CCR 1001–5:3D.II.A.25.b.

[17] 5 CCR 1001–5:3D.II.A.25.d.

[18] 5 CCR 1001–5:3D.V.A.3.a(i)(a).

[19] Final Rule, Approval and Promulgation of Air Quality Implementation Plans; Colorado; Revisions to Regulation Number 3, 84 FR 18991 (May 3, 2019).

CFR 51.165.[20] The EPA is proposing to approve Colorado's certification that the SIP-approved New Source Review permitting requirements in Regulation 3, Part D of the CCR meet the requirements located in 40 CFR 51.1314 and 40 CFR 51.165.

III. Proposed Action

We are proposing to approve the NNSR Permit Program certification provided in Colorado's SIP revision. The certified NNSR Permit Program was prepared in accordance with requirements of sections 172(c)(5) and 173 of the CAA and fulfills the specific minimum SIP requirements of 40 CFR 51.165. The EPA is soliciting public comments on the issues discussed in this document. These comments will be considered before taking final action.

IV. Statutory and Executive Order Reviews

Under the CAA, the Administrator is required to approve a SIP submission that complies with the provisions of the Act and applicable Federal regulations. 42 U.S.C. 7410(k); 40 CFR 52.02(a). Thus, in reviewing SIP submissions, the EPA's role is to approve state choices, provided that they meet the criteria of the CAA. Accordingly, this action merely proposes to approve state law as meeting Federal requirements and does not impose additional requirements beyond those imposed by state law. For that reason, this action:

- Is not a ''significant regulatory action'' subject to review by the Office of Management and Budget under Executive Orders 12866 (58 FR 51735, October 4, 1993) and 13563 (76 FR 3821, January 21, 2011);
- Does not impose an information collection burden under the provisions of the Paperwork Reduction Act (44 U.S.C. 3501 *et seq.*);
- Is certified as not having a significant economic impact on a substantial number of small entities under the Regulatory Flexibility Act (5 U.S.C. 601 *et seq.*);
- Does not contain any unfunded mandate or significantly or uniquely affect small governments, as described in the Unfunded Mandates Reform Act of 1995 (Pub. L. 104–4);
- Does not have Federalism implications as specified in Executive Order 13132 (64 FR 43255, August 10, 1999);
- Is not an economically significant regulatory action based on health or safety risks subject to Executive Order 13045 (62 FR 19885, April 23, 1997);
- Is not a significant regulatory action subject to Executive Order 13211 (66 FR 28355, May 22, 2001);
- Is not subject to requirements of section 12(d) of the National Technology Transfer and Advancement Act of 1995 (15 U.S.C. 272 note) because application of those requirements would be inconsistent with the CAA; and
- Does not provide EPA with the discretionary authority to address, as appropriate, disproportionate human health or environmental effects, using practicable and legally permissible methods, under Executive Order 12898 (59 FR 7629, February 16, 1994).

In addition, the SIP is not approved to apply on any Indian reservation land or in any other area where EPA or an Indian tribe has demonstrated that a tribe has jurisdiction. In those areas of Indian country, the proposed rule does not have tribal implications and will not impose substantial direct costs on tribal governments or preempt tribal law as specified by Executive Order 13175 (65 FR 67249, November 9, 2000).

List of Subjects in 40 CFR Part 52

Environmental protection, Air pollution control, Carbon monoxide, Greenhouse gases, Incorporation by reference, Intergovernmental relations, Lead, Nitrogen dioxide, Ozone, Particulate matter, Reporting and recordkeeping requirements, Sulfur oxides, Volatile organic compounds.

Authority: 42 U.S.C. 7401 *et seq.*

Dated: October 25, 2021.

Debra H. Thomas,

Acting Regional Administrator, Region 8.

[FR Doc. 2021–23876 Filed 11–1–21; 8:45 am]

BILLING CODE 6560–50–P

[20] Final Rule, Approval and Promulgation of State Implementation Plan Revisions; Colorado; Attainment Demonstration for the 2008 8-Hour Ozone Standard for the Denver Metro/North Front Range Nonattainment Area, and Approval of Related Revisions, 83 FR 31068 (July 3, 2018).

FEDERAL COMMUNICATIONS COMMISSION

47 CFR Parts 1, 2 and 101

[WT Docket No. 20–133; DA 21–1263; FR ID 55689]

Wireless Telecommunication Bureau Seeks To Supplement the Record on 70/80/90 GHz Bands Notice of Proposed Rulemaking

AGENCY: Federal Communications Commission.

ACTION: Proposed rule; request for comments.

SUMMARY: In this document, the Commission seeks comment to supplement the record in the rulemaking on a Notice of Proposed Rulemaking to address the potential for use of the 71–76 GHz, 81–86 GHz, 92–94 GHz, and the 94.1–95 GHz (70/80/90 GHz) bands to provide broadband internet access to consumers and communities that may otherwise lack robust, consistent connectivity. In particular, the Commission seeks comment on whether High Altitude Platform Stations (HAPS) or other stratospheric-based platform services could be deployed for this purpose in the 70/80/90 GHz bands. The Commission also seeks additional information regarding the potential use of these bands to provide broadband internet access to customers on airplanes and aboard ships, as proposed by Aeronet Global Communications, Inc.

DATES: Submit comments on or before December 2, 2021. Submit reply comments on or before January 3, 2022.

ADDRESSES: You may submit comments, identified by WT Docket No. 20–133, by any of the following methods:

- *Electronic Filers:* Comments may be filed electronically using the internet by accessing the ECFS: *www.fcc.gov/ecfs/*.
- *Paper Filers:* Parties that choose to file by paper must file an original and one copy of each filing.

Filings can be sent by commercial overnight courier, or by first-class or overnight U.S. Postal Service mail. All filings must be addressed to the Commission's Secretary, Office of the Secretary, Federal Communications Commission.

- Commercial overnight mail (other than U.S. Postal Service Express Mail and Priority Mail) must be sent to 9050 Junction Drive, Annapolis Junction, MD 20701.
- U.S. Postal Service first-class, Express, and Priority mail must be addressed to 45 L Street NE, Washington, DC 20554.
- Effective March 19, 2020, and until further notice, the Commission no longer accepts any hand or messenger delivered filings. This is a temporary measure taken to help protect the health and safety of individuals, and to mitigate the transmission of COVID–19. See FCC Announces Closure of FCC Headquarters Open Window and Change in Hand-Delivery Policy, Public Notice, 35 FCC Rcd 2788 (2020). *https://www.fcc.gov/document/fcc-closes-headquarters-open-window-and-changes-hand-delivery-policy.*

People with Disabilities. To request materials in accessible formats for people with disabilities (Braille, large print, electronic files, audio format),

send an email to *fcc504@fcc.gov* or call the Consumer and Governmental Affairs Bureau at 202–418–0530 (voice), 202–418–0432 (tty).

FOR FURTHER INFORMATION CONTACT: Anthony Patrone, Broadband Division, Wireless Telecommunications Bureau, (202) 418–2428, *Anthony.Patrone@FCC.gov.* For information regarding the PRA information collection requirements that may be contained in this proposed rule, contact Cathy Williams, Office of Managing Director, at (202) 418–2918 or *Cathy.Williams@fcc.gov.*

SUPPLEMENTARY INFORMATION: This is a summary of the Commission's document (Public Notice), in WT Docket No. 20–133; DA 21–1263, released on October 8, 2021. The full text of this document is available on the Commission's website at *https://docs.fcc.gov/public/attachments/DA-21-1263A1.pdf.* This document seeks to supplement the record of the Commission's Notice of Proposed Rulemaking (*NPRM*), Modernizing and Expanding Access, 85 FR 40168, July 6, 2020, to the 70/80/90 GHz Bands, WT Docket Nos. 20–133; 10–153, 15–244; FCC 20–76; RMs–11824, 11825, adopted June 9, 2020, and released June 10, 2020. The *NPRM* may also be downloaded *https://docs.fcc.gov/public/attachments/FCC-20-76A1.pdf.*

Synopsis

I. Background

1. As described in greater detail in the *70/80/90 GHz NPRM (85 FR 40168, July 6, 2020),* in the United States, the 70/80/90 GHz bands are allocated on a co-primary basis for Federal and non-Federal use, variously for terrestrial, satellite, radio astronomy and radiolocation uses.[1] In 2003, the Commission established a two-step, non-exclusive licensing regime for non-Federal use of the 70/80/90 GHz bands. Users must first obtain a nationwide, non-exclusive license from the Commission, and then register individual links through a third-party database manager. Non-Federal licensees may use the 70/80/90 GHz bands for any point-to-point, non-broadcast service.

2. In June 2020, the Commission adopted the *70/80/90 GHz NPRM,* which sought comment on potential rule changes for non-Federal uses of the bands proposed by interested parties. Certain of these proposals, such as changes to antenna standards and link registration processes, were aimed at improving efficiency in traditional uses of the bands, such as wireless backhaul. Other inquiries contemplated use of the bands for new service offerings, such as Aeronet's proposals that the Commission authorize point-to-point links to endpoints in motion to facilitate broadband service to ships and aircraft, provided that they do not cause interference to other authorized uses.[2] The Commission also sought comment on whether the 70/80/90 GHz bands could accommodate other types of services, such as High Altitude Platform Stations (HAPS) or similar services.[3] In the record received in response to the *70/80/90 GHz NPRM,* several commenters expressed support for the provision of new services in these bands, including bringing broadband internet access capabilities to areas where such access may not be consistently available. Other parties have expressed concerns about the introduction of new services in the bands.

II. Discussion

3. In this document, the Commission provides an opportunity for commenters to supplement the record regarding the provision of new services in the 70/80/90 GHz bands.[4] In particular, the Commission is interested in the feasibility of permitting HAPS or other stratospheric-based platform services in these bands and the Commission seeks comment on coordinating with incumbents in the band. The Commission's rules define a ''High Altitude Platform Station'' as ''[a] station located on an object at an altitude of 20 to 50 km and at a specified, nominal, fixed point relative to the Earth.'' [5]

4. The Commission seeks further input on whether it should consider authorizing HAPS or other stratospheric-based platform services in any portion of the 70/80/90 GHz bands.[6] How would HAPS be used in these bands? What sort of services would be provided or supported by these systems? The Commission also seeks comments on whether HAPS or other stratospheric-based platform services are likely to be commercially viable.[7] Alternatively, are stratospheric-based platform services likely to be developed to support non-commercial use, either for private, not-for-profit uses, or in support of local, state, or Federal governments?

5. The Commission also seeks comments on the potential for HAPS, or other stratospheric-based platform services, to cause harmful interference to incumbent or potential future services in these, or adjacent, bands including both terrestrial and satellite operations. Advocates for HAPS or similar services assert that they can coexist with incumbent users of the 70 GHz and 80 GHz bands and should be allowed to use these bands without an arbitrary ceiling, *e.g.,* 50,000 feet, for nominally fixed or antennas in motion. If the Commission authorizes HAPS or other stratospheric-based platform services in these bands, are there any limitations or restrictions on the deployment of such services that the Commission should impose in order to

[1] 47 CFR 2.106. *See also 70/80/90 GHz NPRM* at 6040–41, para. 2. The adjacent 76–81 GHz band is allocated for, among other uses, Radiolocation and licensed by rule under subpart M of part 95 (The 76–81 GHz Band Radar Service), which ''may operate as vehicular radars, or as fixed or mobile radars in airport air operations areas, including but not limited to [foreign object debris] detection radars and aircraft-mounted radars for ground use.'' 47 CFR 95.3331. The adjacent 86–92 GHz band is allocated for Earth Exploration-Satellite (passive), Space Research (passive), and Radio Astronomy services. *See, e.g., id., 70/80/90 GHz NPRM* citing 47 CFR 2.106 nn.US246, US74.

[2] *70/80/90 GHz NPRM* at 6043–44, para. 7 (citing Aeronet Aviation Petition; Aeronet Maritime Petition).

[3] *70/80/90 GHz NPRM* at 6059, para. 51.

[4] The Commission notes that there are other issues raised by the *70/80/90 GHz NPRM* and subsequent record, such as changes to antenna standards and the link registration process, that the Commission does not address here. These issues remain under consideration by the Commission.

[5] 47 CFR 2.1(c). *See also* RR 1.66A (''high altitude platform station: A station located on an object at an altitude of 20 to 50 km and at a specified, nominal, fixed point relative to the Earth.''). The Commission notes that the Elefante Group in 2018 sought Commission authorization to operate a stratospheric-based broadband service using platform stations operating just below the 20 km threshold set for HAPS. *See* Petition for Rulemaking of Elefante Group, Inc., RM–11809 (filed May 31, 2018). *See also Elefante Group Inc.'s Petition for Rulemaking* to Enable Timely Deployment of Fixed Stratospheric-Based Communications Services in the 21.5–23.6, 25.25–27.5, 71–76 and 81–86 GHz Bands, Report No. 3093, CG RM–11809 (2018).

[6] Spectrum for HAPS in the frequency bands 47/48 GHz, 2 GHz, 27/31 GHz and 6 GHz was designated at three WRCs—WRC–97, WRC–2000 and WRC–12. After study for WRC–19, additional spectrum was identified: 31–31.3 GHz and 38–39.5 GHz globally, and in Region 2 (including U.S.), 21.4–22 GHz and 24.25–27.5 GHz.

[7] The Commission notes that several advocates for HAPS are no longer pursuing their planned operations. *See* Paresh Dave, *Alphabet Shutting Loon, Which Used Balloon Alternative to Cell Towers,* Reuters (Jan. 21, 2021) *https://www.reuters.com/article/us-alphabet-loon/alphabet-shutting-loon-which-used-balloon-alternative-to-cell-towers-idUSKBN29R02U;* Adam Satariano, *Facebook Halts Aquila, Its internet Drone Project,* New York Times (June 27, 2018) *https://www.nytimes.com/2018/06/27/technology/facebook-drone-internet.html;* Elefante Comments at 2 (''Due to unforeseen developments, Elefante Group is unable to state with certainty its ability at this time to advance its mission consistent with the vision set out in the Elefante Group Petition. Nonetheless, Elefante Group submits that the Commission should strive to preserve maximum flexibility and opportunities in its regulatory framework for the 70/80 GHz Bands.'').

guard against the potential for interference into incumbent operations, such as altitude restrictions, power limits, transmitter design considerations, directional constraints, additional emission limits, or other requirements, including new or revised coordination requirements? To aid other stakeholders in the bands, and the adjacent bands, to evaluate potential interference concerns and submit their own analyses, the Commission also seeks specific information about anticipated stratospheric-based platform system operating parameters including transmission direction, deployment densities, earth station elevation angles, station heights, antenna characteristics (*e.g.*, antenna polarization, antenna pattern mask), station Equivalent Isotropically Radiated Power (EIRP), and operating bandwidths (including out-of-band performance).

6. In the *70/80/90 GHz NPRM,* the Commission also sought comment on the international coordination implications of the services proposed. The Wireless Telecommunication Bureau now specifically seeks comment on any international implications related to HAPS or other stratospheric-based platform services in the 70/80/90 GHz bands.

7. If the Commission does authorize HAPS or other stratospheric-based services in some or all of the 70/80/90 GHz bands, what service rules should apply? Could these new services be registered and coordinated through the existing third-party database manager process? The Commission seeks comments on what changes to the registration and coordination process would be necessary to facilitate the deployment of HAPS or other stratospheric-based services. The current 70/80/90 GHz coordination process only considers fixed systems. If HAPS is authorized, should it be limited to nominally fixed stations?

8. Relatedly, the Commission also seeks to further develop the record on Aeronet's proposal to permit the use of ''Scheduled Dynamic Datalinks'' (SDDLs). In the *70/80/90 GHz NPRM,* the Commission sought comment on how links to endpoints-in-motion could affect existing services in the 70/80/90 GHz bands. Several commenters filed comments and technical analyses supporting Aeronet's proposals, while several commenters express concern about potential interference to incumbents. In view of the concerns expressed, the Commission seeks further detailed technical studies demonstrating that deployment of SDDLs would not cause harmful interference to incumbents, co-primary users, adjacent band uses or potential future uses of the band, including FS, FSS, HAPS or other stratospheric-based platform services, and the adjacent band EESS (passive) and radio astronomy operations. To aid other stakeholders in the bands, and the adjacent bands, to evaluate potential interference concerns and submit their own analyses, the Commission also seeks specific information about anticipated SDDL system operating parameters, including station heights, antenna characteristics (*e.g.*, antenna polarization, antenna pattern mask), station EIRP, operating bandwidths (including out-of-band performance), and ground station gains. In this context, the Commission notes that on October 4, 2021, Aeronet filed a coexistence analysis of its proposed SDDL system and the Space X satellite system. The Commission seeks comments on this filing, including the extent to which it addresses the questions raised in this paragraph and related stakeholder concerns.

Federal Communications Commission.

Amy Brett,

Acting Chief of Staff, Wireless Telecommunications Bureau.

[FR Doc. 2021–23712 Filed 11–1–21; 8:45 am]

BILLING CODE 6712–01–P

FEDERAL COMMUNICATIONS COMMISSION

47 CFR Part 64

[WC Docket No. 12–375, DA 21–1297; FRS 54866]

Rates for Interstate Inmate Calling Services

AGENCY: Federal Communications Commission.

ACTION: Proposed rule; extension of reply comment period.

SUMMARY: In this document, the Federal Communications Commission is extending the time to file reply comments in response to the *2021 ICS Further Notice* in this proceeding in order to afford interested parties sufficient time to prepare them.

DATES: Reply Comments in response to the *2021 ICS Further Notice* are due December 17, 2021.

ADDRESSES: You may submit comments, identified by WC Docket No. 12–375, by any of the following methods:

- *Electronic Filers:* Comments may be filed electronically using the internet by accessing the ECFS: *https://apps.fcc.gov/ecfs/.*
- *Paper Filers:* Parties who choose to file by paper must file an original and one copy of each filing.
- Filings can be sent by commercial overnight courier, or by first-class or overnight U.S. Postal Service mail. All filings must be addressed to the Commission's Secretary, Office of the Secretary, Federal Communications Commission.
- Commercial overnight mail (other than U.S. Postal Service Express Mail and Priority Mail) must be sent to 9050 Junction Drive, Annapolis Junction, MD 20701.
- U.S. Postal Service first-class, Express, and Priority mail must be addressed to 45 L Street NE, Washington, DC 20554.
- Effective March 19, 2020, and until further notice, the Commission no longer accepts any hand or messenger delivered filings. This is a temporary measure taken to help protect the health and safety of individuals, and to mitigate the transmission of COVID–19. See FCC Announces Closure of FCC Headquarters Open Window and Change in Hand-Delivery Policy, Public Notice, DA 20–304 (March 19, 2020). *https://www.fcc.gov/document/fcc-closes-headquarters-open-window-and-changes-hand-delivery-policy.*

People with Disabilities: To request materials in accessible formats for people with disabilities (braille, large print, electronic files, audio format), send an email to *fcc504@fcc.gov* or call the Consumer & Governmental Affairs Bureau at 202–418–0530 (voice), 202–418–0432 (TTY).

FOR FURTHER INFORMATION CONTACT: Simon Solemani, Pricing Policy Division of the Wireline Competition Bureau, at (202) 418–2270 or via email at *simon.solemani@fcc.gov.*

SUPPLEMENTARY INFORMATION: This is a summary of the FCC's Order, DA 21–1297, released October 15, 2021. The full text of this Order is available at: *https://docs.fcc.gov/public/attachments/DA-21-1297A1.pdf.* The full text of Global Tel*Link Corporation (GTL)'s motion is available at: *https://ecfsapi.fcc.gov/file/1007291601627/GTL%20Extension%20Request%20(10-6-21).pdf.*

1. By this Order, the Wireline Competition Bureau (Bureau) of the Federal Communications Commission grants in part and denies in part a motion filed by Global Tel*Link Corporation (GTL) seeking extensions of time for (1) filing Paperwork Reduction Act (PRA) comments on new information collection requirements adopted in the *2021 ICS Order* currently due October 25, 2021, (2) reply

comments in response to the *2021 ICS Further Notice,* currently due October 27, 2021, and (3) comments and reply comments regarding the Third Mandatory Data Collection, currently due November 4 and November 19, 2021. In view of GTL's Extension Request and the record developed in response to it, we grant an extension of time to file reply comments in response to the *2021 ICS Further Notice* and deny GTL's other extension requests as set forth below. As a result, reply comments in response to the *2021 ICS Further Notice* are now due on December 17, 2021. All other comment and reply comment deadlines in this proceeding remain unchanged.

2. On May 24, 2021, the Commission released the *ICS Third Report and Order, Order on Reconsideration, and Fifth Further Notice of Proposed* in this proceeding. In the *2021 ICS Order,* the Commission adopted various rules, some of which require approval from the Office of Management and Budget (OMB) under the PRA. On August 25, 2021, the **Federal Register** published a notice setting a comment date of October 25, 2021 on the rules adopted in the *2021 ICS Order* that require OMB approval under the PRA.

3. The *2021 ICS Further Notice* set deadlines for filing comments and reply comments at 30 and 60 days, respectively, after a summary of the item was published in the **Federal Register**. The **Federal Register** published that summary on July 28, 2021, establishing an August 27, 2021 comment deadline and a September 27, 2021 reply comment deadline. In response to a prior motion for extension of time, the Bureau released an order extending those deadlines to September 27, 2021 and October 27, 2021, respectively.

4. As part of the *2021 ICS Order,* the Commission also adopted a Third Mandatory Data Collection. The Commission directed WCB and the Office of Economics and Analytics (collectively WCB/OEA) to develop instructions and a template for the data collection to be submitted to OMB for its approval under the PRA no later than 90 days after the *2021 ICS Order* becomes effective. We interpret this reference to the effective date of the *2021 ICS Order* as referring to the effective date of the rules not requiring OMB approval under the PRA. That effective date is October 26, 2021. As the *2021 ICS Order* will be effective on October 26, 2021, WCB/OEA must submit a template and instructions to OMB no later than January 24, 2022. On September 22, 2021, WCB/OEA released a public notice seeking comment on the proposed instructions, a template, and certification forms for the Third Mandatory Data Collection. The *Third MDC Public Notice* set the comment deadline at 30 days after the date of publication in the **Federal Register** and the reply comment deadline at 45 days after the date of publication in the **Federal Register**. The **Federal Register** published a summary of the public notice on October 5, 2021 and established deadlines of November 4, 2021 for comments and November 19, 2021 for reply comments on the *Third MDC Public Notice.*

5. On October 6, 2021, GTL filed its Extension Request, seeking to extend the filing deadlines for (1) PRA comments for the new information collection requirements adopted in the *2021 ICS Order* from October 25, 2021 to November 8, 2021; (2) reply comments on the *2021 ICS Further Notice* from October 27, 2021 to November 17, 2021; and (3) comments and reply comments on the Third Mandatory Data Collection from November 4, 2021 and November 19, 2021 to November 24, 2021 and December 9, 2021, respectively. GTL explains that it is ''in the process of implementing the interim rates, ancillary service charges, and other changes'' adopted in the *2021 ICS Order* that will become effective October 26, 2021. GTL highlights that the October 26 implementation deadline in conjunction with the other comments deadlines present a ''perfect storm'' of deadlines and argues that ''changing only one comment date will just continue to perpetuate the problem given the successive comment deadlines.'' GTL submits that its extension requests are in the public interest because they would allow GTL and other providers to focus on the October 26, 2021 implementation deadline while allowing stakeholders time to evaluate the information submitted in initial comments on the *2021 ICS Further Notice* and to respond to the questions in the *Third MDC Public Notice.* GTL explains that the National Sheriffs' Association, Securus Technologies, Pay Tel Communications, and NCIC Inmate Communications do not oppose its extension requests and that several advocacy groups support extending the reply comment deadline on the *2021 ICS Further Notice* to December 10, 2021. GTL notes that the Prison Policy Initiative does not support extending that reply comment deadline but does not object to extending the PRA comment deadline and the deadlines on the Mandatory Data Collection.

6. On October 8, 2021, the Wright Petitioners, Benton Institute for Broadband & Society, Free Press, New America's Open Technology Institute, Public Knowledge, and the United Church of Christ, OC Inc. (the Public Interest Parties) filed a reply to GTL's Extension Request. The Public Interest Parties support extending the deadline to file reply comments in connection with the *2021 ICS Further Notice* but oppose GTL's request for extensions of the PRA and Third Mandatory Data Collection deadlines. The Public Interest Parties also propose further extending the deadline for reply comments on the *2021 ICS Further Notice* to December 17, 2021, arguing that such an extension ''will allow interested parties to fully evaluate and respond to issues raised in the comments while also submitting PRA and Third Mandatory Data Collection comments.'' The Public Interest Parties emphasize that ''[g]iven the importance of obtaining updated cost data as soon as possible . . . it is critical that the Third Mandatory Data Collection is finalized 'not later than 90 days' after the effective date of the *2021 ICS Order,* as required by the Commission'' and argue that extending deadlines related to the Third Mandatory Data Collection ''is unnecessary, could harm the public interest, and risks delaying the collection itself.''

7. As set forth in section 1.46 of the Commission's rules, it is the policy of the Commission that extensions of time shall not be routinely granted. However, extensions may be considered ''to the extent that good cause for an extension is demonstrated.'' The criteria for granting requests for extensions of time ''are that the extension be in the public interest, cause no harm to any party in the proceeding, and cause no significant delay.'' The Commission has previously found that an extension of time is warranted when it is ''necessary to ensure that the Commission receives full and informed responses and that affected parties have a meaningful opportunity to develop a complete record for the Commission's consideration.''

8. Here, we find good cause to extend the deadline to file reply comments in response to the *2021 ICS Further Notice,* as proposed by both GTL and the Public Interest Parties. As an initial matter, we are sensitive to GTL's concern that the flow of implementation and comment deadlines in this proceeding create a ''perfect storm'' that, without some adjustment, would make it difficult for GTL and other parties to meaningfully participate in each comment process. We appreciate what appears to be the

unanimous support of interested parties for the goal of more fully developing the record in this proceeding. By moving the deadline to file reply comments on the *2021 ICS Further Notice* to well after both the deadline for reply comments on the *Third MDC Public Notice* and the December 6, 2021 deadline for PRA comments on the Third Mandatory Data Collection, we are persuaded that all interested parties will be granted sufficient time to meaningfully respond to each of the relevant deadlines. Accordingly, we extend the deadline to file reply comments in response to the *2021 ICS Further Notice* to December 17, 2021.

9. However, we do not find good cause to extend the deadline for commenting on the paperwork implications of the consumer disclosure requirements and requirements for providers seeking waiver of the Commission's rate cap and ancillary charge fee caps adopted in the *2021 ICS Order.* Parties have known that those requirements would be subject to OMB approval since the Commission released the *2021 ICS Order* on May 24, 2021. Accordingly, we believe there has been ample time to consider the paperwork implications of those requirements, and no party has provided an explanation as to why an extension of this deadline would be reasonable or in the public interest in light of that fact. We find especially meaningful the fact that an extension of this deadline would only delay the effective date of the information collection requirements adopted in the *2021 ICS Order.* The consumer disclosure requirements, for example, are grounded in the ''strong public interest in facilitating greater transparency'' with respect to inmate calling services rates for incarcerated people and their loved ones who ''ultimately bear the burden of these payments.'' As such, we conclude that an extension of this deadline would not serve the public interest.

10. We also do not find good cause to delay deadlines associated with the Third Mandatory Data Collection. As the Commission explained in the *2021 ICS Order,* the Third Mandatory Data Collection ''is essential to enable [it] to adopt permanent interstate and international rate caps,'' and that ''the benefits of conducting a third collection far outweigh any burden on providers.'' GTL's proposal to extend the comment deadline risks delaying the Third Mandatory Data Collection. Moreover, delaying these comment deadlines could endanger the Commission-established January 24, 2022 deadline for WCB/OEA to submit the template and instructions for the Third Mandatory Data Collection to OMB, as any delays in these comment deadlines would significantly limit the time WCB/OEA have to review the comments prior to the January 24, 2022 deadline or alternatively would result in adversely delaying the submission of the data collection to OMB. In light of the clear importance and time constraints of the Third Mandatory Data Collection, we conclude that GTL has not shown good cause to extend these deadlines nor would it serve the public interest to do so.

11. On balance, we conclude that extending the reply comment deadline for the *2021 ICS Further Notice* to December 17, 2021 will provide interested parties the time needed to participate in each comment or reply cycle as desired without unnecessarily impeding or delaying the Third Mandatory Data Collection or implementation of the transparency rules.

12. This action is taken pursuant to delegated authority 47 CFR 0.291.

Federal Communications Commission.

Daniel Kahn,

Associate Bureau Chief, Wireline Competition Bureau.

[FR Doc. 2021–23696 Filed 11–1–21; 8:45 am]

BILLING CODE 6712–01–P

Notices

Federal Register
Vol. 86, No. 209
Tuesday, November 2, 2021

This section of the FEDERAL REGISTER contains documents other than rules or proposed rules that are applicable to the public. Notices of hearings and investigations, committee meetings, agency decisions and rulings, delegations of authority, filing of petitions and applications and agency statements of organization and functions are examples of documents appearing in this section.

DEPARTMENT OF AGRICULTURE

Solicitation of Nominations for Membership on the Equity Commission Advisory Committee and Equity Commission Subcommittee on Agriculture Extension of Application Period; Correction

AGENCY: United States Department of Agriculture (USDA).

ACTION: Notice of Correction; extending the nomination application period for the USDA Equity Commission and its Subcommittee on Agriculture.

SUMMARY: The United State Department of Agriculture published a notice of solicitation of nominations for memberships to extend the application period for the Equity Commission Advisory Committee and Equity Commission Subcommittee on Agriculture in the **Federal Register** on October 27, 2021, titled ''Solicitation of Nominations for Membership on the Equity Commission Advisory Committee and Equity Commission Subcommittee on Agriculture Extension of Application Period.'' The nomination application period for individuals who wish to serve and/or submit nominations to recommend potential candidates for the Equity Commission and/or Subcommittee on Agriculture has been extended until November 30, 2021. Contrary to what was published in the summary section of (86 FR 59360), this Correction Notice (Correction) is being issued to clarify and confirm that USDA will be accepting nominations for membership until the November 30, 2021 date.

FOR FURTHER INFORMATION CONTACT: *Equitycommission@usda.gov* or Dewayne L. Goldmon, Ph.D.; telephone: (202) 997–2100; email: *dewayne.goldmon@usda.gov*.

SUPPLEMENTARY INFORMATION:

Correction

In FR Doc 2021–23425 of October 27, 2021 (86 FR 59360), making the following correction of reference in the summary of the USDA notice on page 59360, in column 1, the November 20, 2021 date is being removed and corrected to November 30, 2021.

Dated: October 27, 2021.

Cikena Reid,

Committee Management Officer, USDA.

[FR Doc. 2021–23826 Filed 11–1–21; 8:45 am]

BILLING CODE 3410–01–P

COMMISSION ON CIVIL RIGHTS

Commission on Social Status of Black Men and Boys; Meeting Notice

AGENCY: Commission on the Social Status of Black Men and Boys (CSSBMB), U.S. Commission on Civil Rights (USCCR).

ACTION: Notice of CSSBMB inaugural public business meeting.

DATES: Wednesday, November 9, 2021, 1:00 p.m. ET.

ADDRESSES: Virtual briefing via *https://www.youtube.com/user/USCCR/videos.*

FOR FURTHER INFORMATION CONTACT: Marvin Williams: 202–339–2371; *pressbmb@usccr.gov.*

SUPPLEMENTARY INFORMATION: In accordance with Public Law 116–156, 134 Stat. 700 (2020), the Commission on the Social Status of Black Men and Boys (CSSBMB) Act, the CSSBMB Commission (Commission) will hold its first meeting. This meeting is open to the public. Pursuant to the Act, the Commission is a bipartisan group created by Congress in 2020, which consists of individuals knowledgeable about issues concerning Black men and boys in the United States, including: Education; justice and Civil Rights; healthcare; labor and employment; and housing. The Commission will utilize the expertise of its members to conduct a systematic study of the conditions identified as affecting Black men and boys, including homicide rates, arrest and incarceration rates, poverty, violence, fatherhood, mentorship, drug abuse, death rates, disparate income and wealth levels, school performance in all grade levels including postsecondary education and college, and health issues.

This meeting is open to the public via livestream on the Commission's YouTube Page at *https://www.youtube.com/user/USCCR/videos.* (Streaming information subject to change.) Public participation is available for the event with view access, along with an audio option for listening.

Computer assisted real-time transcription (CART) will be provided. The web link to access CART (in English) on Monday, November 1, 2021, is *https://www.streamtext.net/player?event=USCCR.* Please note that CART is text-only translation that occurs in real time during the meeting and is not an exact transcript.

* Date and meeting details are subject to change. For more information on the CSSBMB or the upcoming public meeting, please visit CSSBMB's website at *www.usccr.gov/about/CSSBMB.*

Meeting Agenda

I. Call to Order
  A. Welcome and Presentation by USCCR Staff Director and introduction of CSSBMB Program Manager
II. Approval of Agenda
III. Business Meeting
  A. Discussion and Vote on Chair, and Secretary
  B. Discussion and Adoption of Rules to Conduct Business Meetings
  C. Discussion and Vote on 2022 Meeting Dates
  E. Management and Operations
  • Program Manager's Report
IV. Chair Comments/Adjourn Meeting

Dated: October 27, 2021.

Angelia Rorison,

USCCR Media and Communications Director.

[FR Doc. 2021–23818 Filed 11–1–21; 8:45 am]

BILLING CODE P

DEPARTMENT OF COMMERCE

Agency Information Collection Activities; Submission to the Office of Management and Budget (OMB) for Review and Approval; Comment Request; Identifying Actionable Opportunities To Advance Equity and Remove Barriers To Support Underserved Communities

AGENCY: Department of Commerce.

ACTION: Notice; request for comment.

SUMMARY: The Department of Commerce (DOC), as part of its commitment to

support the President's Executive Order, *Advancing Racial Equity and Support for Underserved Communities,* is announcing an opportunity for public comment on a new proposed information collection, ''Identifying Actionable Opportunities to Advance Equity and Remove Barriers to Support Underserved Communities''. In accordance with the Paperwork Reduction Act of 1995 (PRA), we invite the general public and other Federal agencies to comment on proposed, and continuing information collections, which helps us assess the impact of our information collection requirements and minimize the public's reporting burden. The purpose of this notice is to allow for 60 days of public comment preceding submission of the collection to OMB.

DATES: To ensure consideration, comments regarding this proposed information collection must be received on or before January 3, 2022.

ADDRESSES: Interested persons are invited to submit written comments to the Department of Commerce PRA Clearance Officer at *PRAcomments@doc.gov.* All comments received are part of the public record. Comments will generally be posted without change. All Personally Identifiable Information (for example, name and address) voluntarily submitted by the commenter may be publicly accessible. Do not submit Confidential Business Information or otherwise sensitive or protected information.

FOR FURTHER INFORMATION CONTACT: Requests for additional information should be directed to Attn: Sheleen Dumas, PRA Clearance Officer, Office of Policy and Governance, Commerce Headquarters, 1401 Constitution Ave. NW, Washington, DC 20230; (202) 482–3306; or via email: *docpra@doc.gov.*

SUPPLEMENTARY INFORMATION:

I. Abstract

In January 2021, President Biden issued Executive Order 13985, '*Advancing Racial Equity and Support for Underserved Communities*', which established policy instructing the Federal Government to pursue a comprehensive approach to advancing equity for all, including people of color and others who have been historically underserved, marginalized, and adversely affected by persistent poverty and inequality, and tasks agencies with developing proactive policies, regulations, and guidance that affirmatively promote equity and speak to the needs of underserved communities. This will require agencies to review existing policies, rules, regulatory actions, and guidance. It will also require that agencies identify drivers of systemic inequities that are not currently being addressed and develop potential policies to address those inequities.

This new information collection will enable the Department of Commerce to act in accordance with this Executive Order to improve both efficiency and mission delivery, and to remove systemic barriers to opportunities and benefits for underserved communities. To accomplish this mission effectively, Commerce needs ongoing feedback on its programs and services. This information collection item allows Commerce to solicit clients' opinions about the use of products, services, and events.

Commerce will collect, analyze, and interpret information gathered through this information collection to identify gaps in equity and make improvements in accessibility, navigation, use, and service delivery based on insights gathered through developing an understanding of the user experience in underserved communities. Commerce will develop a question bank for all Bureaus to use to solicit information from both federal and non-federal individuals and organizations to develop policies and programs that deliver resources and benefits equitably to all.

These data collection efforts may be either qualitative or quantitative in nature or may consist of mixed methods. Additionally, data may be collected via a variety of means, including but not limited to electronic or social media, direct or indirect observation (*i.e.,* in person, video and audio collections), interviews, questionnaires, surveys, and focus groups. Steps will be taken to ensure anonymity of respondents in each activity covered by this request.

As a general matter, these information collections will not result in any new system of records containing privacy information and will not ask questions of a sensitive nature and matters that are commonly considered private. Personally identifiable information (PII) is collected only to the extent necessary and is not retained.

If this information is not collected, Commerce will be unable to systematically determine the actual and relative levels of performance for its programs and services to underserved communities and to provide clear, actionable insights for equitable intervention.

II. Method of Collection

The Department of Commerce will collect this information by electronic means when possible, as well as by mail, fax, telephone, technical discussions; and customer experience activities such as feedback surveys, focus groups, user testing, and in-person interviews. Department of Commerce may also utilize observational techniques to collect this information.

III. Data

OMB Control Number: 0690–NEW.

Form Number(s): New.

Type of Review: Regular submission.

Affected Public: Collections will be targeted to the solicitation of opinions from respondents who have experience with the Commerce programs, services, or events or may have experience with the programs, services, or events in the future. For the purposes of this request, ''customers'' are individuals, businesses, and organizations that interact with a Federal Government agency or program, either directly or via a federal contractor. This could include individuals or households; businesses or other for-profit organizations; not-for-profit institutions; State, local or tribal governments; Federal government; and Universities.

Estimated Number of Respondents: 150,000.

Estimated Time per Response: Varied, dependent upon the data collection method used. The possible response time to complete a questionnaire or survey may be 3 minutes or up to 2 hours to participate in an interview or focus group.

Estimated Total Annual Burden Hours: 32,875.

Estimated Total Annual Cost to Public: $0 (This is not the cost of respondents' time, but the indirect costs respondents may incur for such things as purchases of specialized software or hardware needed to report, or expenditures for accounting or records maintenance services required specifically by the collection.).

Respondent's Obligation: Voluntary.

Legal Authority: Executive Order (E.O.) 13985.

IV. Request for Comments

We are soliciting public comments to permit the Department/Bureau to: (a) Evaluate whether the proposed information collection is necessary for the proper functions of the Department, including whether the information will have practical utility; (b) Evaluate the accuracy of our estimate of the time and cost burden for this proposed collection, including the validity of the methodology and assumptions used; (c) Evaluate ways to enhance the quality, utility, and clarity of the information to be collected; and (d) Minimize the

reporting burden on those who are to respond, including the use of automated collection techniques or other forms of information technology.

Comments that you submit in response to this notice are a matter of public record. We will include or summarize each comment in our request to OMB to approve this ICR. Before including your address, phone number, email address, or other personal identifying information in your comment, you should be aware that your entire comment—including your personal identifying information—may be made publicly available at any time. While you may ask us in your comment to withhold your personal identifying information from public review, we cannot guarantee that we will be able to do so.

Sheleen Dumas,

Department PRA Clearance Officer, Office of the Chief Information Officer, Commerce Department.

[FR Doc. 2021–23687 Filed 11–1–21; 8:45 am]

BILLING CODE 3510–17–P

DEPARTMENT OF COMMERCE

Foreign-Trade Zones Board

[B–52–2021]

Foreign-Trade Zone (FTZ) 265—Conroe, Texas ; Authorization of Export-Only Production Activity, Galdisa USA (Peanut Products), Conroe, Texas

On June 30, 2021, the City of Conroe, Texas, grantee of FTZ 265, submitted a notification of proposed export-only production activity to the FTZ Board on behalf of Galdisa USA, within FTZ 265, in Conroe, Texas.

The notification was processed in accordance with the regulations of the FTZ Board (15 CFR part 400), including notice in the **Federal Register** inviting public comment (86 FR 37116–37117, July 14, 2021). On October 28, 2021, the applicant was notified of the FTZ Board's decision that no further review of the activity is warranted at this time. The export-only production activity described in the notification was authorized, subject to the FTZ Act and the FTZ Board's regulations, including Section 400.14.

Dated: October 28, 2021.

Andrew McGilvray,

Executive Secretary.

[FR Doc. 2021–23837 Filed 11–1–21; 8:45 am]

BILLING CODE 3510–DS–P

DEPARTMENT OF COMMERCE

Foreign-Trade Zones Board

[B–53–2021]

Foreign-Trade Zone (FTZ) 93—Raleigh/Durham North Carolina, Authorization of Production Activity, Liebel-Flarsheim Company, LLC (Diagnostic Imaging Contrast Media), Raleigh, North Carolina

On June 30, 2021, the Triangle J Council of Governments, grantee of FTZ 93, submitted a notification of proposed production activity to the FTZ Board on behalf of Liebel-Flarsheim Company, LLC, within FTZ 93, in Raleigh, North Carolina.

The notification was processed in accordance with the regulations of the FTZ Board (15 CFR part 400), including notice in the **Federal Register** inviting public comment (86 FR 37116, July 14, 2021). On October 28, 2021, the applicant was notified of the FTZ Board's decision that no further review of the activity is warranted at this time. The production activity described in the notification was authorized, subject to the FTZ Act and the FTZ Board's regulations, including Section 400.14.

Dated: October 28, 2021.

Andrew McGilvray,

Executive Secretary.

[FR Doc. 2021–23838 Filed 11–1–21; 8:45 am]

BILLING CODE 3510–DS–P

DEPARTMENT OF COMMERCE

International Trade Administration

[A–533–901]

Organic Soybean Meal From India: Preliminary Affirmative Determination of Sales at Less Than Fair Value, Postponement of Final Determination, and Extension of Provisional Measures

AGENCY: Enforcement and Compliance, International Trade Administration, Department of Commerce

SUMMARY: The Department of Commerce (Commerce) preliminarily determines that organic soybean meal from India is being, or is likely to be, sold in the United States at less than fair value (LTFV). The period of investigation (POI) is January 1, 2020, through December 31, 2020. Interested parties are invited to comment on this preliminary determination.

DATES: Applicable November 2, 2021.

FOR FURTHER INFORMATION CONTACT: Andrew Huston, AD/CVD Operations, Office VII, Enforcement and Compliance, International Trade Administration, U.S. Department of Commerce, 1401 Constitution Avenue NW, Washington, DC 20230; telephone: (202) 482–4261.

SUPPLEMENTARY INFORMATION:

Background

This preliminary determination is made in accordance with section 733(b) of the Tariff Act of 1930, as amended (the Act). Commerce published the notice of initiation of this investigation on April 27, 2021.[1] On August 18, 2021, Commerce postponed the preliminary determination of this investigation and the revised deadline is now October 27, 2021.[2] For a complete description of the events that followed the initiation of this investigation, *see* the Preliminary Decision Memorandum.[3] A list of topics included in the Preliminary Decision Memorandum is included as Appendix II to this notice. The Preliminary Decision Memorandum is a public document and is on file electronically via Enforcement and Compliance's Antidumping and Countervailing Duty Centralized Electronic Service System (ACCESS). ACCESS is available to registered users at *https://access.trade.gov.* In addition, a complete version of the Preliminary Decision Memorandum can be accessed directly at *https://access.trade.gov/public/FRNoticesListLayout.aspx.*

Scope of the Investigation

The product covered by this investigation is organic soybean meal from India. For a complete description of the scope of this investigation, *see* Appendix I.

Scope Comments

In accordance with the preamble to Commerce's regulations,[4] the *Initiation Notice* set aside a period of time for parties to raise issues regarding product coverage (*i.e.,* scope).[5] No interested party commented on the scope of the investigation as it appeared in the *Initiation Notice.* Commerce is preliminarily modifying the scope language as it appeared in the *Initiation*

[1] *See Organic Soybean Meal from India: Initiation of Less-Than-Fair-Value Investigation,* 86 FR 22146 (April 27, 2021) (*Initiation Notice*).

[2] *See Organic Soybean Meal from India: Postponement of Preliminary Determinations in the Less-Than-Fair-Value Investigation,* 86 FR 46181 (August 18, 2021).

[3] *See* Memorandum, ''Organic Soybean Meal from India: Decision Memorandum for the Preliminary Affirmative Determination of Sales at Less Than Fair Value,'' dated concurrently with, and hereby adopted by, this notice (Preliminary Decision Memorandum).

[4] *See Antidumping Duties; Countervailing Duties, Final Rule,* 62 FR 27296, 27323 (May 19, 1997).

[5] *See Initiation Notice.*

Notice.[6] *See* the revised scope in Appendix I to this notice.

Methodology

Commerce is conducting this investigation in accordance with section 731 of the Act. Commerce has calculated export prices in accordance with section 772(a) of the Act. Normal value (NV) is calculated in accordance with section 773 of the Act. In addition, Commerce has relied on facts available with an adverse inference (AFA) under sections 776(a) and (b) of the Act for Shanti Worldwide, Shri Sumati Oil Industries Pvt. Ltd., Navjyot International Pvt. Ltd., Ish Agritech Pvt. Ltd., Satguru Organics Pvt. Ltd., Radiance Overseas, Swastik Enterprises, Soni Soya Products Limited, Raj Foods International, Vantage Organic Foods Pvt. Ltd., Shree Bhagwati Oil Mill, and Pragati Organics (collectively non-responsive companies). For a full description of the methodology underlying the preliminary determination, *see* the Preliminary Decision Memorandum.

All-Others Rate

Sections 733(d)(1)(ii) and 735(c)(5)(A) of the Act provide that in the preliminary determination Commerce shall determine an estimated all-others rate for all exporters and producers not individually examined. This rate shall normally be an amount equal to the weighted average of the estimated weighted-average dumping margins established for exporters and producers individually investigated, excluding any zero and *de minimis* margins, and any margins determined entirely under section 776 of the Act.

In this investigation, Commerce preliminarily assigned a rate based entirely on facts available to the non-responsive companies. Therefore, the only rate that is not zero, *de minimis* or based entirely on facts otherwise available is the rate calculated for Bergwerff Organic India Private Limited (Bergwerff). Consequently, the rate calculated for Bergwerff is also assigned as the rate for all other producers and exporters.

Preliminary Determination

Commerce preliminarily determines that the following estimated weighted-average dumping margins exist:

Exporter/producer	Estimated weighted average dumping margin (percent)	Cash deposit rate (adjusted for subsidy offset(s) (percent)
Bergwerff Organic Private Limited/Suminter India Organic Private Limited	3.11	0.00
Shanti Worldwide	* 18.85	11.83
Shri Sumati Oil Industries Pvt. Ltd	* 18.85	11.83
Navjyot International Pvt. Ltd	* 18.85	11.83
Ish Agritech Pvt. Ltd	* 18.85	11.83
Satguru Organics Pvt. Ltd	* 18.85	11.83
Radiance Overseas	* 18.85	11.83
Swastik Enterprises	* 18.85	11.83
Soni Soya Products Limited	* 18.85	11.83
Raj Foods International	* 18.85	11.83
Vantage Organic Foods Pvt. Ltd	* 18.85	11.83
Shree Bhagwati Oil Mill	* 18.85	11.83
Pragati Organics	* 18.85	11.83
All Others	3.11	0.00

* (AFA).

Suspension of Liquidation

In accordance with section 733(d)(2) of the Act, Commerce will direct U.S. Customs and Border Protection (CBP) to suspend liquidation of entries of subject merchandise, as described in Appendix I, entered, or withdrawn from warehouse, for consumption on or after the date of publication of this notice in the **Federal Register**. Further, pursuant to section 733(d)(1)(B) of the Act and 19 CFR 351.205(d), Commerce will instruct CBP to require a cash deposit equal to the estimated weighted-average dumping margin or the estimated all-others rate, as follows: (1) The cash deposit rate for the respondents listed above will be equal to the company-specific estimated weighted-average dumping margins determined in this preliminary determination; (2) if the exporter is not a respondent identified above, but the producer is, then the cash deposit rate will be equal to the company-specific estimated weighted-average dumping margin established for that producer of the subject merchandise; and (3) the cash deposit rate for all other producers and exporters will be equal to the all-others estimated weighted-average dumping margin.

Commerce normally adjusts cash deposits for estimated antidumping duties by the amount of export subsidies countervailed in a companion countervailing duty (CVD) proceeding when CVD provisional measures are in effect. Accordingly, where Commerce preliminarily made an affirmative determination for countervailable export subsidies, Commerce has offset the estimated weighted-average dumping margin by the appropriate CVD rate(s).[7] Any such adjusted cash deposit rate may be found in the ''Preliminary Determination'' section above.[8] Should provisional measures in the companion CVD investigation expire prior to the expiration of provisional measures in this LTFV investigation, Commerce will direct CBP to begin collecting estimated antidumping duty cash deposits unadjusted for countervailed export subsidies at the time that the provisional CVD measures expire. These suspension of liquidation instructions will remain in effect until further notice.

[6] *See* Preliminary Decision Memorandum at Scope Comments.

[7] *See, e.g., Polyester Textured Yarn from India: Preliminary Affirmative Determination of Sales at Less Than Fair Value and Postponement of Final Determination and Extension of Provisional Measures,* 84 FR 31301 (July 1, 2019), unchanged in *Polyester Textured Yarn from India: Final Determination of Sales at Less Than Fair Value,* 84 FR 63843 (November 19, 2019).

[8] *See* Preliminary Decision Memorandum for further discussion.

Disclosure

Commerce intends to disclose its calculations and analysis performed to interested parties in this preliminary determination within five days of any public announcement or, if there is no public announcement, within five days of the date of publication of this notice in accordance with 19 CFR 351.224(b).

Verification

As provided in section 782(i)(1) of the Act, Commerce intends to verify the information relied upon in making its final determination. Normally, Commerce verifies information using standard procedures, including an on-site examination of original accounting, financial, and sales documentation. However, due to current travel restrictions in response to the global COVID–19 pandemic, Commerce is unable to conduct on-site verification in this investigation. Accordingly, we intend to verify the information relied upon in making the final determination through alternative means in lieu of an on-site verification.

Public Comment

Case briefs or other written comments may be submitted to the Assistant Secretary for Enforcement and Compliance A timeline for the submission of case briefs and written comments will be notified to interested parties at a later date. Rebuttal briefs, limited to issues raised in case briefs, may be submitted no later than seven days after the deadline date for case briefs.[9] Note that Commerce has temporarily modified certain of its requirements for serving documents containing business proprietary information, until further notice.[10] Pursuant to 19 CFR 351.309(c)(2) and (d)(2), parties who submit case briefs or rebuttal briefs in this investigation are encouraged to submit with each argument: (1) a statement of the issue; (2) a brief summary of the argument; and (3) a table of authorities.

Pursuant to 19 CFR 351.310(c), interested parties who wish to request a hearing, limited to issues raised in the case and rebuttal briefs, must submit a written request to the Assistant Secretary for Enforcement and Compliance, U.S. Department of Commerce, within 30 days after the date of publication of this notice. Requests should contain the party's name, address, and telephone number, the number of participants, whether any participant is a foreign national, and a list of the issues to be discussed. If a request for a hearing is made, Commerce intends to hold the hearing at a time and date to be determined. Parties should confirm by telephone the date, time, and location of the hearing two days before the scheduled date.

Postponement of Final Determination and Extension of Provisional Measures

Section 735(a)(2) of the Act provides that a final determination may be postponed until not later than 135 days after the date of the publication of the preliminary determination if, in the event of an affirmative preliminary determination, a request for such postponement is made by exporters who account for a significant proportion of exports of the subject merchandise, or in the event of a negative preliminary determination, a request for such postponement is made by the petitioner. Section 351.210(e)(2) of Commerce's regulations requires that a request by exporters for postponement of the final determination be accompanied by a request for extension of provisional measures from a four-month period to a period not more than six months in duration.

On October 11, 2021, pursuant to 19 CFR 351.210(e), Bergwerff requested that Commerce postpone the final determination and that provisional measures be extended to a period not to exceed six months.[11] In accordance with section 735(a)(2)(A) of the Act and 19 CFR 351.210(b)(2)(ii), because: (1) The preliminary determination is affirmative; (2) the requesting exporter accounts for a significant proportion of exports of the subject merchandise; and (3) no compelling reasons for denial exist, Commerce is postponing the final determination and extending the provisional measures from a four-month period to a period not greater than six months. Accordingly, Commerce will make its final determination no later than 135 days after the date of publication of this preliminary determination.

International Trade Commission Notification

In accordance with section 733(f) of the Act, Commerce will notify the International Trade Commission (ITC) of its preliminary determination. If the final determination is affirmative, the ITC will determine before the later of 120 days after the date of this preliminary determination or 45 days after the final determination whether these imports are materially injuring, or threaten material injury to, the U.S. industry.

Notification to Interested Parties

This determination is issued and published in accordance with sections 733(f) and 777(i)(1) of the Act, and 19 CFR 351.205(c).

Dated: October 27, 2021.

Ryan Majerus,

Deputy Assistant Secretary for Policy and Negotiations, performing the non-exclusive functions and duties of the Assistant Secretary for Enforcement and Compliance.

Appendix I

Scope of the Investigation

The merchandise subject to the investigation is certified organic soybean meal. Certified organic soybean meal results from the mechanical pressing of certified organic soybeans into ground products known as soybean cake, soybean chips, or soybean flakes, with or without oil residues. Soybean cake is the product after the extraction of part of the oil from soybeans. Soybean chips and soybean flakes are produced by cracking, heating, and flaking soybeans and reducing the oil content of the conditioned product. ''Certified organic soybean meal'' is certified by the U.S. Department of Agriculture (USDA) National Organic Program (NOP) or equivalently certified to NOP standards or NOP-equivalent standards under an existing organic equivalency or recognition agreement.

Certified organic soybean meal subject to this investigation has a protein content of 34 percent or higher.

Organic soybean meal that is otherwise subject to this investigation is included when incorporated in admixtures, including but not limited to prepared animal feeds. Only the organic soybean meal component of such admixture is covered by the scope of this investigation. The products covered by this investigation are currently classified under the following Harmonized Tariff Schedule of the United States (HTSUS) subheadings: 1208.10.0010 and 2304.00.0000. Certified organic soybean meal may also enter under HTSUS 2309.90.1005, 2309.90.1015, 2309.90.1020, 2309.90.1030, 2309.90.1032, 2309.90.1035, 2309.90.1045, 2309.90.1050, and 2308.00.9890.

The HTSUS subheadings and specifications are provided for convenience and customs purposes; the written description of the scope is dispositive.

Appendix II

List of Topics Discussed in the Preliminary Decision Memorandum

I. Summary
II. Background
III. Period of Investigation
IV. Scope Comments
V. Scope of the Investigation

[9] *See* 19 CFR 351.309; *see also* 19 CFR 351.303 (for general filing requirements).

[10] *See Temporary Rule Modifying AD/CVD Service Requirements Due to COVID–19,* 85 FR 17006 (March 26, 2020) (*Temporary Rule*); and *Temporary Rule Modifying AD/CVD Service Requirements Due to COVID–19; Extension of Effective Period,* 85 FR 41363 (July 10, 2020).

[11] *See* Bergwerff's Letter, ''Organic Soybean Meal from India: Request for Postponement of the Final Determination,'' dated October 11, 2021.

VI. Postponement of Final Determination
VII. Affiliation and Collapsing
VIII. Application of Facts Available and Use of Adverse Inferences
IX. Discussion of the Methodology
X. Date of Sale
XI. Product Comparisons
XII. Export Price
XIII. Normal Value
XIV. Currency Conversion
XV. Adjustment to Cash Deposit Rates for Export Subsidies in Companion CVD Investigation
XVI. Recommendation

[FR Doc. 2021–23883 Filed 11–1–21; 8:45 am]

BILLING CODE 3510–DS–P

DEPARTMENT OF COMMERCE

National Oceanic and Atmospheric Administration

Request for Public Comment on the Alaska Coastal Mapping Strategy Implementation Plan

AGENCY: Office of Coast Survey (OCS), National Ocean Service (NOS), National Oceanic and Atmospheric Administration (NOAA), Department of Commerce (DOC).

ACTION: Notice of public comment.

SUMMARY: On behalf of the Alaska Mapping Executive Committee (AMEC), a Federal-state partnership to coordinate the modernization of critical Alaska map layers, NOAA requests review of the draft *Alaska Coastal Mapping Strategy (ACMS) Implementation Plan* from all interested parties. Through this request for information (RFI), AMEC's Coastal Subcommittee seeks input from the public on the Implementation Plan and its milestones targeted at improving the coordination and collection of coastal mapping in Alaska. AMEC seeks to ensure that program implementation is informed by and responsive to all sectors through sustained engagement and effective partnerships.

DATES: Comments must be received via email by 5 p.m. ET on January 31, 2022.

ADDRESSES: Comments can be submitted by email to *iwgocm.staff@noaa.gov* by the January 31, 2022, deadline.

Instructions: The draft ACMS Implementation Plan can be found at *https://iocm.noaa.gov/about/strategic-plans.html.* Response to this RFI is voluntary. Respondents need not reply to all questions listed. For all submissions, clearly indicate which questions are being answered. Email attachments will be accepted in plain text, Microsoft Word, or Adobe PDF formats only. Each individual or institution is requested to submit only one response. NOAA requests that no business proprietary information, copyrighted information, or personally identifiable information be submitted in response to this RFI. Please note that the U.S. Government will not pay for response preparation, or for the use of any information contained in the response.

FOR FURTHER INFORMATION CONTACT: Requests for additional information should be directed to Ashley Chappell, NOAA Integrated Ocean and Coastal Mapping Coordinator, 240–429–0293, or *ashley.chappell@noaa.gov.*

SUPPLEMENTARY INFORMATION:

Background

The ACMS was completed in June 2020, in conjunction with the National Ocean Mapping, Exploration and Characterization Strategy (NOMEC). The ACMS envisions an Alaska that in 2030 possesses seamless coastal mapping data. This vision translates into near-term goals for action, including acquiring priority coastal mapping datasets over the next 5 years, and the remainder of Alaskan shoreline datasets by 2030. Primarily focused on airborne and satellite technologies, the four ACMS goals are to:

(1) Build on existing mapping partnerships to meet Alaska's coastal mapping needs.

(2) Expand coastal data collection to deliver the priority geospatial products stakeholders require.

(3) Leverage innovation in mapping technology development.

(4) Conduct strategic communications to promote widespread stakeholder engagement.

The draft ACMS Implementation Plan, now available for review, adds detail to the goals and objectives in the strategy. The NOMEC implementation plan, published January 2021, describes milestones and objectives aimed at the completion of mapping Alaska's waters deeper than 40m by 2030 and those shallower than 40m by 2040. While the boundary line between the ACMS and NOMEC is not exact due to varying extinction depths of airborne technologies, the two strategies combined are intended to fill the mapping gaps in Alaskan coastal and ocean waters.

Request for Comment

This notice requests comment on the draft ACMS Implementation Plan at *https://iocm.noaa.gov/about/strategic-plans.html.* Reviewer comments are not limited, but questions that might be considered while reviewing the plan include:

(1) What does successful implementation look like to your organization, sector, or interest group? How do you anticipate your organization or sector will participate in the ACMS implementation?

(2) What specific implementation actions would be of value to your organization/sector?

(3) How should the AMEC Coastal Subcommittee appropriately engage your organization to get ongoing feedback throughout implementation?

(4) What activities is your organization currently undertaking, has recently undertaken, or is planning that may support or benefit from ACMS implementation? What processes and connections would be required to realize those opportunities?

(5) What publicly accessible databases and archives does your organization offer that may house data relevant to ACMS?

(6) Who are the additional partners that are needed to effectively plan and execute a successful ACMS program in the future, as well as those that can help disseminate information from this work to various audiences? How could Federal agencies more effectively engage these partners? If there are barriers to this cooperation, please describe. Please do not only limit your responses to organizations that are traditionally involved in this work, but also think how we can engage other groups that can make important contributions.

(7) How can ACMS and NOMEC implementation plan activities and milestones be aligned to most efficiently advance the goals of both strategies?

The Coast and Geodetic Survey Act of 1947, 33 U.S.C. 883e.

Kathryn Ries,

Performing the Duties of Director, Office of Coast Survey, National Ocean Service, National Oceanic and Atmospheric Administration.

[FR Doc. 2021–23878 Filed 11–1–21; 8:45 am]

BILLING CODE 3510–JE–P

DEPARTMENT OF COMMERCE

National Oceanic and Atmospheric Administration

[RTID 0648–XB480]

Magnuson-Stevens Act Provisions; General Provisions for Domestic Fisheries; Application for Exempted Fishing Permits

AGENCY: National Marine Fisheries Service (NMFS), National Oceanic and Atmospheric Administration (NOAA), Commerce.

ACTION: Notice; request for comments.

SUMMARY: The Assistant Regional Administrator for Sustainable Fisheries, Greater Atlantic Region, NMFS, has made a preliminary determination that an Exempted Fishing Permit (EFP) application contains all of the required information and warrants further consideration. The EFP would allow commercial fishing vessels to fish outside of fishery regulations in support of research conducted by the applicant. Regulations under the Magnuson-Stevens Fishery Conservation and Management Act require publication of this notification to provide interested parties the opportunity to comment on applications for proposed EFPs.

DATES: Comments must be received on or before November 17, 2021.

ADDRESSES: You may submit written comments by any of the following methods:

- *Email: nmfs.gar.efp@noaa.gov.* Include in the subject line ''CFF Seasonal Scallop Survey EFP.''

FOR FURTHER INFORMATION CONTACT: Louis Forristall, Marine Resource Management Specialist, *louis.forristall@noaa.gov,* (978) 281–9321.

SUPPLEMENTARY INFORMATION: The applicant submitted a complete application for an EFP to conduct commercial fishing activities that the regulations would otherwise restrict. This EFP would exempt the participating vessels from the following Federal regulations:

TABLE 1—REQUESTED EXEMPTIONS

Citation	Regulation	Need for exemption
50 CFR 648.53(b)	Days-at-Sea (DAS)	Exempt participating vessels from DAS while testing experimental gears.
§ 648.51(c)	Crew Size Restrictions	Allow for researchers to be present on vessel.
§ 648.11(g)	Observer Program Requirements	Research activities are not consistent with normal fishing operations.
§ 648.51(b)(4)(iii)	Dredge Obstructions	Allow for testing of gear modifications—only additional depressor plate or large disc cookie sweep.
§ 648.60(e)	Nantucket Lightship South-Deep Scallop Rotational Area.	Allow for experimental fishing activities in closed rotational management area.
§ 648.60(g)	Nantucket Lightship North Scallop Rotational Area.	See above.
§ 648.60(h)	Nantucket Lightship Triangle Scallop Rotational Area.	See above.
§ 648.60(b)	Closed Area II Scallop Rotational Area	See above.
§ 648.60(b)(2)	Closed Area II Closure Area restrictions	See above.
§ 648.60(d)	Closed Area II East Scallop Rotational Area restrictions.	See above.
§ 648.81(b)	Closed Area II scallop gear restrictions	See above.
§ 648.81(a)(5)(i)	Closed Area II Closure area restrictions	See above.
§ 648.59(a)(1)–(3), (b)(2), (b)(4)	Access area program requirements	See above.
§ 648.14(i)(1)(vi)(B)	Scallop closed area requirement for scallop rotational areas.	See above.
Part 648 Subparts B and D through O	Fish size and Possession limits	Onboard sampling activities.

TABLE 2—PROJECT SUMMARY

Applicant	Coonamessett Farm Foundation (CFF).
Project objectives	Test the capability of a dredge modification to reduce flounder bycatch.
Application date	August 5, 2021.
Project period	December 1, 2021—April 20, 2022.
Project location	Closed Area II & Nantucket Lightship Access Areas, Open Area of Great South Channel, Stellwagen Bank, and Long Island.
Number of vessels	2.
Number of trips	2.
Trip duration (days)	5 (3 fishing, 2 transit).
Total number of days	10.
Gear type(s)	Paired Turtle Deflector Dredges.
Number of tows or sets	60.
Duration of tows or sets	30 minutes.

Project Narrative

Coonamessett Farm Foundation (CFF) applied for an EFP on August 5, 2021, to conduct a field trial of scallop dredge cutting bar modifications. This EFP would allow CFF to conduct 60 tows over 10 days at sea on commercial scallop vessels. The gear modifications used in the field trials would either be: (1) A rigid steel plate ahead of the depressor plate, parallel to the cutting bar or (2) a large disc cookie sweep. Computational fluid dynamics testing and expert opinion would be used to assess variations of these modifications and the selected modifications would be tested in field trials.

Tow locations would be based on flatfish bycatch hotspots reported by CFF's industry partners. Participating vessels would use two, 15-foot turtle deflector dredges towed side-by-side. The dredges would have 10-inch twine tops and 4-inch rings. One dredge would feature the selected gear modification. A tow speed of 4.5 to 5.5 knots and tow time of 30 minutes would be targeted throughout the field trials.

CFF researchers would accompany vessels at all times and would direct sampling activities. Scallop catch would be sorted into baskets and weighed. A one-basket sub-sample from each dredge would be measured to the nearest millimeter and shucked to evaluate meat yield. Fish catch would be

weighed and measured. Other bycatch species would be counted and weighed. With the exception of catch sacrificed for biological sampling, catch would be returned to the water as quickly as possible after sampling.

If approved, the applicant may request minor modifications and extensions to the EFP throughout the year. EFP modifications and extensions may be granted without further notice if they are deemed essential to facilitate completion of the proposed research and have minimal impacts that do not change the scope or impact of the initially approved EFP request. Any fishing activity conducted outside the scope of the exempted fishing activity would be prohibited.

Authority: 16 U.S.C. 1801 *et seq.*

Dated: October 28, 2021.

Jennifer M. Wallace,

Acting Director, Office of Sustainable Fisheries, National Marine Fisheries Service.

[FR Doc. 2021–23884 Filed 11–1–21; 8:45 am]

BILLING CODE 3510–22–P

DEPARTMENT OF COMMERCE

National Oceanic and Atmospheric Administration

[RTID 0648–XB560]

Mid-Atlantic Fishery Management Council (MAFMC); Public Meeting

AGENCY: National Marine Fisheries Service (NMFS), National Oceanic and Atmospheric Administration (NOAA), Commerce.

ACTION: Notice; public meeting.

SUMMARY: The Mid-Atlantic Fishery Management Council's Ecosystem and Ocean Planning Advisory Panel will hold a public meeting.

DATES: The meeting will be held on Thursday, November 18, 2021, from 10 a.m. to 12 p.m. For agenda details, see **SUPPLEMENTARY INFORMATION**.

ADDRESSES: The meeting will be held via webinar. Connection information will be posted to the Council's calendar prior to the meeting at *www.mafmc.org.*

Council address: Mid-Atlantic Fishery Management Council, 800 N State Street, Suite 201, Dover, DE 19901; telephone: (302) 674–2331; *www.mafmc.org.*

FOR FURTHER INFORMATION CONTACT: Christopher M. Moore, Ph.D., Executive Director, Mid-Atlantic Fishery Management Council, telephone: (302) 526–5255.

SUPPLEMENTARY INFORMATION: The Ecosystem and Ocean Planning Advisory Panel will meet to consider recommendations for revisions to the Mid-Atlantic Fishery Management Council's Policy on Offshore Wind Energy Development. These recommendations will be considered by the Ecosystem and Ocean Planning Committee.

Special Accommodations

The meeting is physically accessible to people with disabilities. Requests for sign language interpretation or other auxiliary aids should be directed to Shelley Spedden, (302) 526–5251 at least 5 days prior to the meeting date.

Authority: 16 U.S.C. 1801 *et seq.*

Dated: October 28, 2021.

Tracey L. Thompson,

Acting Deputy Director, Office of Sustainable Fisheries, National Marine Fisheries Service.

[FR Doc. 2021–23868 Filed 11–1–21; 8:45 am]

BILLING CODE 3510–22–P

COMMODITY FUTURES TRADING COMMISSION

Agency Information Collection Activities: Proposed Revised Collection, Comment Request: Swap Execution Facilities Final Rule; Notice of Intent To Revise Collection 3038–0074: Core Principles and Other Requirements for Swap Execution Facilities

AGENCY: Commodity Futures Trading Commission.

ACTION: Notice.

SUMMARY: The Commodity Futures Trading Commission (CFTC) is announcing an opportunity for public comment on the revision of a collection of certain information by the agency. Under the Paperwork Reduction Act (''PRA''), Federal agencies are required to publish notice in the **Federal Register** concerning each proposed collection of information, including proposed extension of an existing collection of information, and to allow 60 days for public comment. The Commission recently adopted a final rule amending requirements for swap execution facilities. This notice republishes the burden in the final rule, and solicits any additional comments on the burden associated with the previously published final rule.

DATES: Comments must be submitted on or before January 3, 2022.

ADDRESSES: You may submit comments, and ''OMB Control No. 3038–0074'' by any of the following methods:

- The Agency's website, at *http://comments.cftc.gov/.* Follow the instructions for submitting comments through the website.
- *Mail:* Christopher Kirkpatrick, Secretary of the Commission, Commodity Futures Trading Commission, Three Lafayette Centre, 1155 21st Street NW, Washington, DC 20581.
- *Delivery/Courier:* Same as Mail above.

Please submit your comments using only one method.

FOR FURTHER INFORMATION CONTACT: Gail Scott, Assistant General Counsel, Office of the General Counsel, Commodity Futures Trading Commission, (202) 418–5139; email: *gscott@cftc.gov.*

SUPPLEMENTARY INFORMATION: Under the PRA, 44 U.S.C. 3501 *et seq.,* Federal agencies must obtain approval from the Office of Management and Budget (OMB) for each collection of information they conduct or sponsor. ''Collection of Information'' is defined in 44 U.S.C. 3502(3) and 5 CFR 1320.3 and includes agency requests or requirements that members of the public submit reports, keep records, or provide information to a third party. Section 3506(c)(2)(A) of the PRA, 44 U.S.C. 3506(c)(2)(A), requires Federal agencies to provide a 60-day notice in the **Federal Register** concerning each proposed collection of information, including each proposed extension of an existing collection of information, before submitting the collection to OMB for approval. To comply with this requirement, the CFTC is publishing notice of the proposed amendment to the collection listed below. An agency may not conduct or sponsor, and a person is not required to respond to, a collection of information unless it displays a currently valid OMB control number.

Title: Core Principles and Other Requirements for Swap Execution Facilities (OMB Control No. 3038–0074). This is a request for an amendment to a currently approved information collection.

Abstract: Title VII of the Dodd-Frank Wall Street Reform and Consumer Protection Act (''Dodd-Frank Act'') added new section 5h to the Commodity Exchange Act (''CEA'') to impose requirements concerning the registration and operation of swap execution facilities (''SEFs''), which the Commission has incorporated in part 37 of its regulations as well as other parts of the Commission's regulations. The information collections under this Control Number are necessary for the Commission to evaluate whether SEFs, or entities applying to become SEFs, comply with the CEA's statutory core principle requirements and part 37 of the Commission regulations.

The final rule, 86 FR 9224 (Feb. 11, 2021), provides relief from certain part 37 requirements that SEFs found in practice to be operationally unworkable or unnecessarily burdensome. The Commission revised information collection number 3038–0074 to reflect the adoption of amendments to part 37 of its regulations, as discussed below, but does not believe the regulations as adopted impose any other new collections of information that require approval of OMB under the PRA.

With respect to the collection of information, the CFTC invites comments on:

- Whether the proposed collection of information is necessary for the proper performance of the functions of the Commission, including whether the information will have a practical use;
- The accuracy of the Commission's estimate of the burden of the proposed collection of information, including the validity of the methodology and assumptions used;
- Ways to enhance the quality, usefulness, and clarity of the information to be collected; and
- Ways to minimize the burden of collection of information on those who are to respond, including through the use of appropriate automated electronic, mechanical, or other technological collection techniques or other forms of information technology; *e.g.,* permitting electronic submission of responses.

All comments must be submitted in English, or if not, accompanied by an English translation. Comments will be posted as received to *https://www.cftc.gov.* You should submit only information that you wish to make available publicly. If you wish the Commission to consider information that you believe is exempt from disclosure under the Freedom of Information Act, a petition for confidential treatment of the exempt information may be submitted according to the procedures established in § 145.9 of the Commission's regulations.[1]

The Commission reserves the right, but shall have no obligation, to review, pre-screen, filter, redact, refuse or remove any or all of your submission from *https://www.cftc.gov* that it may deem to be inappropriate for publication, such as obscene language. All submissions that have been redacted or removed that contain comments on the merits of the Information Collection Request will be retained in the public comment file and will be considered as required under the Administrative Procedure Act and other applicable laws, and may be accessible under the Freedom of Information Act.

Burden Statement: The Commission is revising its estimate of the burden for this collection for 3038–0074. The respondent burden for this collection is estimated to be as follows:

Estimated Number of Respondents: 20.

Estimated Average Burden Hours per Respondent: 387.

Estimated Total Annual Burden Hours: 7,740.

Frequency of Collection: Once.

There are no capital costs or operating and maintenance costs associated with this collection.

(Authority: 44 U.S.C. 3501 *et seq.*)

Dated: October 28, 2021.

Robert Sidman,

Deputy Secretary of the Commission.

[FR Doc. 2021–23856 Filed 11–1–21; 8:45 am]

BILLING CODE 6351–01–P

[1] 17 CFR 145.9.

DEPARTMENT OF DEFENSE

Department of the Army, Corps of Engineers

National Wetland Plant List

AGENCY: Army Corps of Engineers, DoD.

ACTION: Notice.

SUMMARY: The U.S. Army Corps of Engineers (USACE), as part of an interagency effort with the U.S. Environmental Protection Agency (EPA), the U.S. Fish and Wildlife Service (FWS) and the U.S. Department of Agriculture Natural Resources Conservation Service (NRCS), is announcing the availability of the final 2020 National Wetland Plant List (NWPL). The NWPL provides plant species indicator status ratings, which are used in determining whether the hydrophytic vegetation factor is met when conducting wetland delineations under the Clean Water Act and wetland determinations under the Wetland Conservation Provisions of the Food Security Act. Other applications of the NWPL include wetland restoration, establishment, and enhancement projects.

DATES: The 2020 NWPL will become applicable on November 2, 2021, and will be used in any wetland delineations performed after this date. Delineations completed prior to this date may still use the 2018 NWPL. Completed wetland delineation/determination forms should reference the version of the NWPL used to complete the form.

ADDRESSES: U.S. Army Corps of Engineers, Attn: CECW–CO–R, 441 G Street NW, Washington, DC 20314–1000.

FOR FURTHER INFORMATION CONTACT: Brianne McGuffie, Headquarters, U.S. Army Corps of Engineers, Operations and Regulatory Community of Practice, Washington, DC 20314–1000, by phone at 202–761–4750 or by email at *brianne.e.mcguffie@usace.army.mil.*

SUPPLEMENTARY INFORMATION:

Background

The U.S. Army Corps of Engineers (USACE) administers the National Wetland Plant List (NWPL) for the United States (U.S.) and its territories. Responsibility for the NWPL was transferred to USACE from the U.S. Fish and Wildlife Service (FWS) in 2006. The NWPL has undergone several revisions since its inception in 1988. Additions or deletions to the NWPL represent new records, range extensions, nomenclatural and taxonomic changes, and newly proposed species. The latest review process began in 2020 and included review by Regional Panels (RPs), the National Panel (NP), and the public, who provided input on proposed wetland rating changes or additions for 27 species and 48 regional ratings (some species were reviewed for multiple regions) submitted by the public. Twenty of these species were proposed for addition to the NWPL, and seven species were submitted for a rating change request in one or more regions. The proposed indicator changes were announced in a **Federal Register** Notice, 86 FR 15656, March 24, 2021, with the comment period ending on May 24, 2021. Thirteen comments were received during that time.

Wetland Indicator Status Ratings

On the NWPL, there are five categories of wetland indicator status ratings, used to indicate a plant's likelihood for occurrence in wetlands versus non-wetlands: Obligate Wetland (OBL), Facultative Wetland (FACW), Facultative (FAC), Facultative Upland (FACU), and Upland (UPL). These rating categories are defined by the NP as follows: OBL—almost always occur in wetlands; FACW—usually occur in wetlands, but may occur in non-wetlands; FAC—occur in wetlands and non-wetlands; FACU—usually occur in non-wetlands, but may occur in wetlands; UPL—almost always occur in non-wetlands. These category definitions are qualitative descriptions that better reflect the qualitative supporting information, rather than numeric frequency ranges. The

percentage frequency categories used in the older definitions are only used for testing problematic or contested species being recommended for indicator status changes. Plus and minus designations and wetland indicator designations such as No Indicator (NI), No Occurrence (NO), and No Agreement (NA) were removed in 2012 and are no longer used on the NWPL. More information on the specifics of how to use these ratings is available on the NWPL website at *https://wetland-plants.sec.usace.army.mil/*.

The NWPL is utilized in conducting wetland delineations under the authority of Section 404 of the Clean Water Act (33 U.S.C. 1344) and Section 10 of the Rivers and Harbors Act of 1899 (33 U.S.C. 401 *et seq.*) and wetland determinations under the authority of the Food Security Act of 1985 (16 U.S.C. 3801 *et seq.*). For the purposes of determining how often a species occurs in wetlands, wetlands are defined as either (1) those areas that are inundated or saturated by surface or ground water at a frequency and duration sufficient to support, and that under normal circumstances do support, a prevalence of vegetation typically adapted for life in saturated soil conditions (33 CFR 328.3) or (2) ''except when such term is part of the term 'converted wetland,' means land that has a predominance of hydric soils; is inundated or saturated by surface or groundwater at a frequency and duration sufficient to support a prevalence of hydrophytic vegetation typically adapted for life in saturated soil conditions; and under normal circumstances does support a prevalence of such vegetation.'' (16 U.S.C. 3801(a)(27) and 7 CFR 12.2). Wetlands are identified using the three-factor approach. Because each species being evaluated occurs as part of a vegetation assemblage, examining the other species present in relation to their assigned wetland fidelity may be useful in assessing hydrophytic vegetation.

Discussion of Public Comments

For the 2020 NWPL update, the NWPL NP and RPs reviewed proposed wetland rating changes or additions for 27 species and 48 regional ratings (some species were reviewed for multiple regions) submitted by the public. Twenty of these species were proposed for addition to the NWPL, and seven species were submitted for a rating change request in one or more regions. Submitted information was reviewed by the NP and RPs, and proposed 2020 ratings for these species were determined. Along with soliciting information on the species being evaluated, we also solicited comments on the overall NWPL process. This information was detailed in the **Federal Register** Notice, 86 FR 15656, March 24, 2021 and is provided in the table below.

At the close of the comment period associated with the **Federal Register** notice, it was discovered that *Spiranthes diluvialis,* which was proposed for listing on the NWPL, was already included on the existing NWPL with the indicator status rating of FACW in the Arid West (AW), Great Plains (GP), and Western Mountains, Valleys, and Coast (WMVC). As a result, no action was taken with regard to *Spiranthes diluvialis* and the indicator status remains unchanged.

In response to the initial **Federal Register** notice, thirteen comments were received, addressing seven different species. One comment was regarding ''*Populus fremontii*'' (synonym of *Populus deltoides* on the 2018 NWPL), recommending that the indicator status in the AW be changed from FAC to FACW. However, this species was not proposed for review or recommended indicator status change at the beginning of the 2020 update process and is therefore not included in this update effort. The proposed change to this species will be evaluated in the 2022 NWPL update. Another comment was on *Echinacea laevigata* in the Atlantic and Gulf Coastal Plain (AGCP) and the Eastern Mountains and Piedmont (EMP). The commenter agreed with the proposed indicator status of FACU for both regions. The main point of this comment was questioning whether rare species, such as *E. laevigata,* should be included on the NWPL. This comment was reviewed by the NWPL RPs and NP and there was overall agreement that it is appropriate to include all species for which we have adequate data to support assignment of an indicator status.

One commenter recommended that *Boltonia decurrens* in the Midwest (MW) be rated FACW, rather than the proposed FAC. Five commenters recommended that *Populus balsamifera* in the WMVC be rated FAC, rather than the proposed FACW. Three commenters, two in the AW and one in the WMVC, recommended that *Vinca major* be rated FACU, rather than the proposed FAC. These recommendations were reviewed by the NWPL RPs and NP, along with literature, specimen collection data, and professional experience and the commenters' recommendations were chosen as the final ratings for each of these three species.

One commenter recommended that *Platanthera praeclara* in the MW be rated FACW, rather than the proposed FAC. This recommendation was reviewed by the MW and GP RPs and the NP, along with literature, specimen collection data, and professional experience and the commenter's recommendation of FACW was chosen as the final rating in both the MW and the GP.

One commenter recommended that *Hypericum calycinum* in the AW be rated UPL, rather than the proposed FAC. This recommendation was reviewed by the AW and WMVC RPs and the NP, along with literature, specimen collection data, and professional experience. Based on this review, FACU was assigned as the indicator status for *Hypericum calycinum* in both the AW and WMVC Regions.

SPECIES REVIEWED FOR NWPL 2020 UPDATE

Species	Region	Current 2018 NWPL rating *	Proposed 2020 NWPL rating	Final 2020 NWPL rating
Aconitum noveboracense	MW	NL	FACW	FACW.
Aconitum noveboracense	NCNE	NL	FAC	FAC.
Aeschynomene virginica	AGCP	FACW	OBL	OBL.
Apios priceana	AGCP	NL	FACU	FACU.
Apios priceana	EMP	NL	FACU	FACU.
Apios priceana	MW	NL	FACU	FACU.
Asclepias meadii	EMP	NL	FACU	FACU.
Asclepias meadii	MW	NL	FACU	FACU.
Asplenium scolopendrium	EMP	NL	FACU	FACU.
Asplenium scolopendrium	NCNE	NL	UPL	UPL.
Atriplex lentiformis	AW	FAC	FACU	FACU.

SPECIES REVIEWED FOR NWPL 2020 UPDATE—Continued

Species	Region	Current 2018 NWPL rating*	Proposed 2020 NWPL rating	Final 2020 NWPL rating
Boltonia decurrens	MW	NL	FAC	FACW.
Celastrus orbiculatus	NCNE	UPL	FACU	FACU
Cirsium pitcheri	MW	NL	FACU	FACU.
Cirsium pitcheri	NCNE	NL	UPL	UPL.
Dalea foliosa	NCNE	NL	FAC	FAC.
Dalea foliosa	EMP	NL	FAC	FAC.
Dalea foliosa	MW	NL	FAC	FAC.
Echinacea laevigata	AGCP	NL	FACU	FACU.
Echinacea laevigata	EMP	NL	FACU	FACU.
Helianthus verticillatus	AGCP	OBL	FAC	OBL.
Hypericum calycinum	AW	NL	FAC	FACU.
Hypericum calycinum	WMVC	NL	FAC	FACU.
Lespedeza leptostachya	MW	NL	FACU	FACU.
Lespedeza leptostachya	NCNE	NL	FACU	FACU.
Ligustrum lucidum	AGCP	NL	FAC	FAC.
Ligustrum lucidum	GP	NL	FACU	FACU.
Ligustrum lucidum	HI	NL	FAC	FAC.
Oxypolis canbyi	AGCP	NL	OBL	OBL.
Peucedanum palustre	NCNE	NL	OBL	OBL.
Physaria globosa	MW	NL	FACU	FACU.
Physaria globosa	EMP	NL	FACU	FACU.
Pinus palustris	AGCP	FACU	FAC	FAC.
Platanthera praeclara	GP	NL	FAC	FACW.
Platanthera praeclara	MW	NL	FAC	FACW.
Platanthera praeclara	NCNE	NL	FACW	FACW.
Populus balsamifera	WMVC	FAC	FACW	FAC.
Quercus pagoda	AGCP	FACW	FAC	FAC.
Silene spaldingii	AW	NL	FACU	FACU.
Silene spaldingii	WMVC	NL	FACU	FACU.
Spiranthes diluvialis	AW	FACW	FACW	FACW.
Spiranthes diluvialis	GP	FACW	FACW	FACW.
Spiranthes diluvialis	WMVC	FACW	FACW	FACW.
Trifolium stoloniferum	EMP	NL	FACU	FACU.
Trifolium stoloniferum	MW	NL	FACU	FACU.
Vinca major	AW	NL	FAC	FACU.
Vinca major	WMVC	NL	FAC	FACU.
Xylocarpus moluccensis	HI	NL	OBL	OBL.

*NL = ''Not Listed'' and indicates proposed additions to the NWPL.

As part of the 2020 NWPL update, USACE also proposed making two administrative changes with the Hawai'i and Pacific Islands Region (HI) and the South Pacific Islands Subregion (SPI). No comments were received from the public on this proposal. NWPL subregions are areas in which small numbers of wetland plants have wetland indicator status ratings that differ from the ratings for the same plant species in the rest of the region. Boundaries of subregions are typically based on Major Land Resource Areas. Under the previous format, the SPI included certain plant species which had an indicator status rating for SPI but not for HI (see *e.g.,* indicator status ratings for *Abildgaardia ovata;* SPI= FACW, HI= NL). This previous format of HI/SPI is inconsistent with the formatting of other NWPL regions and subregions and has caused some confusion when applying the NWPL within HI.

To address this confusion, USACE finalized the two proposed administrative changes, neither of which affect the current boundaries of SPI, HI, or any other NWPL regions or subregions. First, USACE reformatted SPI and HI by merging the lists of plant species from the existing SPI and HI to form a single, comprehensive region, with SPI serving as a subregion of HI, instead of the previous state of the region in which SPI served as a stand-alone subregion separate from the larger HI region. Plant species that had an indicator status rating for SPI but not for HI (*e.g., Abildgaardia ovata*) now have a single, comprehensive indicator status rating for the entire region (HI). For those species which had differing indicator status ratings between SPI and HI (*e.g., Abrus precatorius*), the indicator status rating for SPI has been added to the reformatted SPI, which will serve as a subset of indicator status ratings within HI, and includes only those plant species and associated indicator status ratings which differ from the HI indicator status rating. With the exception of *Xylocarpus moluccensis* and *Ligustrum lucidum,* which were recommended changes submitted by the public, all indicator status ratings for SPI and HI were retained through this reformatting. This administrative change provides greater clarity for the public, removes redundancies in the NWPL that existed between SPI and HI, allows for a consistent formatting of subregions between all NWPL regions, and more accurately and appropriately reflects species' distribution and wetland frequency within SPI and HI.

In addition to reformatting SPI and HI to form a single, comprehensive region, USACE also renamed SPI from its current name, ''South Pacific Islands Subregion'', to ''Pacific Islands Subregion.'' This subregion includes islands which are located within both the northern Pacific (*i.e.,* the Commonwealth of the Northern Mariana Islands and the Territory of Guam) and southern Pacific (*i.e.,* the Territory of American Samoa). Therefore, the name change more accurately characterizes

the geographic extent and spatial variability of this subregion. This change also creates consistency between the naming conventions of the NWPL regions and subregions and the Regional Supplements to the Corps of Engineers Wetland Delineation Manual regions.

In accordance with the Memorandum of Agreement signed in 2017 (2017 MOA),[1] future updates to the NWPL will continue to occur biennially. The public may provide input to be considered as part of future NWPL updates by utilizing the following procedures. A change in indicator status or addition of a currently unlisted species may be requested at any time at *https://wetland-plants.sec.usace.army.mil/* by clicking on the ''Submit a NWPL Change Request'' link and submitting the appropriate data. Appropriate data includes ecological data, literature reviews, frequency and abundance data, testing descriptions, and geographic data for the taxon in wetlands and non-wetlands in the USACE wetland region or subregion for which the change is proposed.

In accordance with the Memorandum of Agreement signed in 2006 (2006 MOA),[2] USACE, endorsed by the EPA, FWS and NRCS, is publishing final wetland indicator statuses for the 2020 NWPL. The final NWPL is available at *https://wetland-plants.sec.usace.army.mil/*. State, regional, and national lists can also be downloaded from this site. This completes the review of the NWPL. All comments received have been evaluated and final indicator statuses have been set.

Detailed information on the update process, protocol, and technical issues can be found in the following documents (available on the NWPL Publications web page):

- Lichvar, Robert W. and Minkin, Paul. Concepts and Procedures for Updating the National Wetland Plant List. Sept 2008. ERDC/CRREL TN–08–3. Hanover, NH: U.S. Army Engineer Research and Development Center, Cold Regions Research and Engineering Laboratory.
- Lichvar, Robert W. and Gillrich, Jennifer J. Final Protocol for Assigning Wetland Indicator Status Ratings during National Wetland Plant List Update. Sept 2011. ERDC/CRREL TN–11–1. Hanover, NH: U.S. Army Engineer Research and Development Center, Cold Regions Research and Engineering Laboratory.

Additional cited literature:

Lichvar R.W., N.C. Melvin, M.L. Butterwick, and W.N. Kirchner. 2012. National Wetland Plant List Indicator Rating Definitions. ERDC/CRREL TN–12–1. Hanover, NH: U.S. Army Engineer Research and Development Center Cold Regions Research and Engineering Laboratory

Environmental Documentation

A decision document has been prepared for this action after all comments received were evaluated. The decision document is available through Headquarters, U.S. Army Corps of Engineers, Operations and Regulatory Community of Practice, 441 G Street NW, Washington, DC 20314–1000.

Authority

The NWPL is utilized in conducting wetland determinations under the authority of the Food Security Act of 1985 (16 U.S.C. 3801 *et seq.*) and wetland delineations under the authority of Section 404 of the Clean Water Act (33 U.S.C. 1344) and Section 10 of the Rivers and Harbors Act of 1899 (33 U.S.C. 401 *et seq.*). The Corps has responsibility for issuing this update pursuant to the 2006 MOA.

Jaime A. Pinkham,

Acting Assistant Secretary of the Army (Civil Works).

[FR Doc. 2021–23891 Filed 11–1–21; 8:45 am]

BILLING CODE 3720–58–P

[1] U.S. Army Corps of Engineers, the U.S. Environmental Protection Agency, the U.S. Fish & Wildlife Service and the Natural Resources Conservation Service. (2017). *Memorandum of Agreement Among the U.S. Army Corps of Engineers, the U.S. Environmental Protection Agency, the U.S. Fish & Wildlife Service and the Natural Resources Conservation Service for the Purpose of Updating and Maintaining the National Wetland Plant List.*

[2] U.S. Army Corps of Engineers, the U.S. Environmental Protection Agency, the U.S. Fish & Wildlife Service and the Natural Resources Conservation Service. (December 12, 2006). *Memorandum of Agreement Among the U.S. Army Corps of Engineers, the U.S. Environmental Protection Agency, the U.S. Fish & Wildlife Service and the Natural Resources Conservation Service for the Purpose of Transferring Responsibility for Updating and Maintaining the National List of Vascular Plant Species that Occur in Wetlands.*

DEPARTMENT OF EDUCATION

National Assessment Governing Board Meeting

AGENCY: National Assessment Governing Board, Department of Education.

ACTION: Notice of open and closed hybrid meetings.

SUMMARY: This notice sets forth the agenda for the National Assessment Governing Board (hereafter referred to as Governing Board) meeting scheduled for November 18–19, 2021. This notice provides information about the meeting to members of the public who may be interested in attending and/or providing written comments related to the work of the Governing Board. Notice of this meeting is required under the Federal Advisory Committee Act (FACA).

ADDRESSES: In-person attendance for this meeting is for members and staff due to ED in-person meeting conference guidelines and COVID–19 social distancing requirements. Governing Board members and staff will meet at the Hilton Washington DC Capitol Hill, 525 New Jersey Ave. NW, Washington, DC 20001. Virtual attendance for all open sessions will be accessible to members of the public who register per the instructions provided in the **SUPPLEMENTARY INFORMATION** section of this notice.

FOR FURTHER INFORMATION CONTACT: Munira Mwalimu, Executive Officer/Designated Federal Official for the Governing Board, 800 North Capitol Street NW, Suite 825, Washington, DC 20002, telephone: (202) 357–6906, fax: (202) 357–6945, email: *Munira.Mwalimu@ed.gov.*

SUPPLEMENTARY INFORMATION: *Statutory Authority and Function:* The Governing Board is established under the National Assessment of Educational Progress Authorization Act, Title III of Public Law 107–279. Information on the Governing Board and its work can be found at *www.nagb.gov.*

The Governing Board formulates policy for the National Assessment of Educational Progress (NAEP) administered by the National Center for Education Statistics (NCES). The Governing Board's responsibilities include: (1) Selecting subject areas to be assessed; (2) developing assessment frameworks and specifications; (3) developing appropriate student achievement levels for each grade and subject tested; (4) developing standards and procedures for interstate and national comparisons; (5) improving the form and use of NAEP; (6) developing guidelines for reporting and disseminating results; and (7) releasing initial NAEP results to the public.

Standing Committee Meetings

The Governing Board's standing committees will meet to conduct regularly scheduled work planned for this Quarterly Board Meeting and any items undertaken by committees for consideration by the full Governing Board. (Please see committee meeting minutes for previous meetings, available at *https://www.nagb.gov/governing-board/quarterly-board-meetings.html*). Committee meeting agendas will be

posted on the Governing Board's website *www.nagb.gov* five business days prior to the meetings. Online registration for virtual access to the open sessions of the Governing Board and committee meetings will also be posted at *www.nagb.gov* five working days prior to each meeting.

Thursday, November 4, 2021

Reporting and Dissemination Committee
3:30 p.m.–5:00 p.m. (Open Session)

Wednesday, November 10, 2021

Assessment Development Committee
3:15 p.m.–4:30 p.m. (Open Session)

Friday, November 12, 2021

Joint Meeting: Reporting and Dissemination Committee and Assessment Development Committee
2:30 p.m.–3:30 p.m. (Open Session)

Monday, November 15, 2021

Nominations Committee
5:00 p.m.–6:00 p.m. (Closed Session)

Tuesday, November 16, 2021

Committee on Standards, Design & Methodology
2:00 p.m.–4:00 p.m. (Closed Session)

Thursday, November 18, 2021

Executive Committee Meeting
9:45 a.m.–10:15 a.m. (Open Session)
10:20 a.m.–11:20 a.m. (Closed Session)
11:20 a.m.–11:30 a.m. (Open Session)

Quarterly Governing Board Meeting

The plenary sessions of the November 18–19, 2021 quarterly meeting of the Governing Board will be held on the following dates and times:

Thursday, November 18, 2021: Open Meeting: 12:45 p.m.–5:30 p.m.

Friday, November 19, 2021: Closed Meeting: 9:00 a.m.–11:00 a.m.; Open Meeting: 11:15 a.m.–4:00 p.m.

November 18, 2021: Open Meetings

On Thursday, November 18, 2021, the Governing Board will meet in open session from 12:45 p.m. to 5:30 p.m.

From 12:45 p.m. to 1:00 p.m., Chair, Beverly Perdue will welcome members, review, and approve the November 18–19, 2021 quarterly Governing Board meeting agenda, and approve minutes from the August 5–6, 2021 quarterly Governing Board meeting.

From 1:00 p.m. to 1:30 p.m. new and reappointed members will offer remarks. Next, Lesley Muldoon, Executive Director of the Governing Board, will update members on ongoing work from 1:30 p.m. to 1:45 p.m. The Board will discuss and take action on the NAEP 2026 Reading Assessment and Item Specifications from 1:45 p.m. to 2:15 p.m.

From 2:15 p.m. to 3:30 p.m. the Board will discuss potential changes to the NAEP Framework update process. From 3:30 p.m. to 4:00 p.m., Secretary Cardona will administer the oath of office to new members and provide remarks.

Thereafter the Board will take a 15 minute break and reconvene from 4:15 p.m. to 5:30 p.m. to discuss initial public comment on the current NAEP Science Framework, after which the November 18, 2021 session will adjourn.

November 19, 2021 Meeting

On Friday, November 19, 2021, the Governing Board meeting will convene in closed session from 9:00 a.m. to 11:00 a.m. to receive a briefing from Peggy Carr, Commissioner of NCES and from Lesley Muldoon on the NAEP Budget and Assessment Schedule. The budget briefing and Governing Board discussions may affect current and future NAEP contracts and must be kept confidential to maintain the integrity of the federal acquisition process. Public disclosure of this confidential information would impede implementation of the NAEP assessment program if conducted in open session. Such matters are protected by exemption 9(B) of § 552b(c) of Title 5 of the United States Code.

The Governing Board then will take a break from 11:00 a.m. to 11:15 a.m. The Board will convene in open session from 11:15 a.m. to 12:15 p.m. to discuss the Governing Board's plans for implementing Year 2 of the Strategic Vision. From 12:15 p.m. to 12:45 p.m. members will engage in open discussion. Thereafter, the Board will engage in a working lunch to receive a briefing from Ray Hart, Executive Director of the Council of the Great City Schools, who will present on the recent Council report, Mirrors or Windows. This report uses NAEP data to understand how large urban districts overcome poverty and other barriers to foster positive educational outcomes for students. From 2:15 p.m. to 4:00 p.m. the Board will receive a briefing and discuss planned and potential innovations for NAEP, led by NCES staff and invited experts. The November 19 session of the Governing Board meeting will adjourn at 4:00 p.m.

The Quarterly Board meeting and committee meeting agendas, together with meeting materials, will be posted on the Governing Board's website at *www.nagb.gov* no later than five working days prior to each meeting.

Virtual attendance for all open sessions will be accessible to members of the public via online registration only at *www.nagb.gov* 5 business days prior to each meeting.

Access to Records of the Meeting: Pursuant to FACA requirements, the public may also inspect the meeting materials at *www.nagb.gov* five business days prior to each meeting. The official verbatim transcripts of the public meeting sessions will be available for public inspection no later than 30 calendar days following each meeting.

Reasonable Accommodations: The meeting is accessible to individuals with disabilities. If you will need an auxiliary aid or service to participate in the meeting (*e.g.,* interpreting service, assistive listening device, or materials in an alternate format), notify the contact person listed in this notice no later than ten working days prior to each meeting.

Written Comment: Written comments related to the work of the Governing Board may be submitted electronically or in hard copy to the attention of the Executive Officer/Designated Federal Official (see contact information noted above).

Public Participation: Members of the public may virtually attend all open sessions of the standing committees and full Governing Board meetings via advance registration. A link to the registration page will be posted on *www.nagb.gov* five business days prior to each meeting date.

Electronic Access to This Document: The official version of this document is the document published in the **Federal Register**. Internet access to the official edition of the **Federal Register** and the Code of Federal Regulations is available via the Federal Digital System at: *www.gpo.gov/fdsys.* At this site you can view this document, as well as all other documents of this Department published in the **Federal Register**, in text or Adobe Portable Document Format (PDF). To use PDF, you must have Adobe Acrobat Reader, which is available free at the Adobe website. You may also access documents of the Department published in the **Federal Register** by using the article search feature at: *www.federalregister.gov.* Specifically, through the advanced search feature at this site, you can limit your search to documents published by the Department.

Authority: Pub. L. 107–279, Title III—National Assessment of Educational Progress § 301.

Lesley Muldoon,

Executive Director, National Assessment Governing Board (NAGB), U. S. Department of Education.

[FR Doc. 2021–23880 Filed 11–1–21; 8:45 am]

BILLING CODE 4000–01–P

DEPARTMENT OF EDUCATION

[Docket No.: ED–2021–SCC–0155]

Agency Information Collection Activities; Comment Request; Borrower Defenses Against Loan Repayment

AGENCY: Federal Student Loan (FSA), Department of Education (ED).

ACTION: Notice.

SUMMARY: In accordance with the Paperwork Reduction Act of 1995, ED is proposing an extension without change of a currently approved collection.

DATES: Interested persons are invited to submit comments on or before January 3, 2022.

ADDRESSES: To access and review all the documents related to the information collection listed in this notice, please use *http://www.regulations.gov* by searching the Docket ID number ED–2021–SCC–0155. Comments submitted in response to this notice should be submitted electronically through the Federal eRulemaking Portal at *http://www.regulations.gov* by selecting the Docket ID number or via postal mail, commercial delivery, or hand delivery. If the *regulations.gov* site is not available to the public for any reason, ED will temporarily accept comments at *ICDocketMgr@ed.gov.* Please include the docket ID number and the title of the information collection request when requesting documents or submitting comments. *Please note that comments submitted by fax or email and those submitted after the comment period will not be accepted.* Written requests for information or comments submitted by postal mail or delivery should be addressed to the PRA Coordinator of the Strategic Collections and Clearance Governance and Strategy Division, U.S. Department of Education, 400 Maryland Ave. SW, LBJ, Room 6W208D, Washington, DC 20202–8240.

FOR FURTHER INFORMATION CONTACT: For specific questions related to collection activities, please contact Beth Grebeldinger, 202–377–4018.

SUPPLEMENTARY INFORMATION: The Department of Education (ED), in accordance with the Paperwork Reduction Act of 1995 (PRA) (44 U.S.C. 3506(c)(2)(A)), provides the general public and Federal agencies with an opportunity to comment on proposed, revised, and continuing collections of information. This helps the Department assess the impact of its information collection requirements and minimize the public's reporting burden. It also helps the public understand the Department's information collection requirements and provide the requested data in the desired format. ED is soliciting comments on the proposed information collection request (ICR) that is described below. The Department of Education is especially interested in public comment addressing the following issues: (1) Is this collection necessary to the proper functions of the Department; (2) will this information be processed and used in a timely manner; (3) is the estimate of burden accurate; (4) how might the Department enhance the quality, utility, and clarity of the information to be collected; and (5) how might the Department minimize the burden of this collection on the respondents, including through the use of information technology. Please note that written comments received in response to this notice will be considered public records.

Title of Collection: Borrower Defenses Against Loan Repayment.

OMB Control Number: 1845–0132.

Type of Review: An extension without change of a currently approved collection.

Respondents/Affected Public: Individuals and Households.

Total Estimated Number of Annual Responses: 150,000.

Total Estimated Number of Annual Burden Hours: 150,000.

Abstract: This is a request for an extension of the current information collection for Form 1845–0132. The U.S. Department of Education (ED) continues to require the collection of this information from borrowers who believe they have cause to request the borrower defense to loan repayment forgiveness of a student loan as noted in regulation in 1998 Reauthorization of the Higher Education Act (HEA) (Sec. 455(h)). This burden continues to be necessary to ensure Heald, Everest and/or WyoTech College borrowers who wish to invoke the borrower defense against repayment of federal student loans can do so in a uniform and informed manner.

Dated: October 28, 2021.

Kate Mullan,

PRA Coordinator, Strategic Collections and Clearance, Governance and Strategy Division, Office of Chief Data Officer, Office of Planning, Evaluation and Policy Development.

[FR Doc. 2021–23828 Filed 11–1–21; 8:45 am]

BILLING CODE 4000–01–P

DEPARTMENT OF EDUCATION

[Docket No.: ED–2021–SCC–0156]

Agency Information Collection Activities; Comment Request; School Pulse Panel Data Collection

AGENCY: Institute of Educational Science (IES), Department of Education (ED).

ACTION: Notice.

SUMMARY: In accordance with the Paperwork Reduction Act of 1995, ED is proposing a new information collection.

DATES: Interested persons are invited to submit comments on or before January 3, 2022.

ADDRESSES: To access and review all the documents related to the information collection listed in this notice, please use *http://www.regulations.gov* by searching the Docket ID number ED–2021–SCC–0149. Comments submitted in response to this notice should be submitted electronically through the Federal eRulemaking Portal at *http://www.regulations.gov* by selecting the Docket ID number or via postal mail, commercial delivery, or hand delivery. If the *regulations.gov* site is not available to the public for any reason, ED will temporarily accept comments at *ICDocketMgr@ed.gov.* Please include the docket ID number and the title of the information collection request when requesting documents or submitting comments. *Please note that comments submitted by fax or email and those submitted after the comment period will not be accepted.* Written requests for information or comments submitted by postal mail or delivery should be addressed to the Director of the Strategic Collections and Clearance Governance and Strategy Division, U.S. Department of Education, 400 Maryland Ave. SW, LBJ, Room 6W208B, Washington, DC 20202–4537.

FOR FURTHER INFORMATION CONTACT: For specific questions related to collection activities, please contact Carrie Clarady, 202–245–6347.

SUPPLEMENTARY INFORMATION: The Department of Education (ED), in accordance with the Paperwork Reduction Act of 1995 (PRA) (44 U.S.C. 3506(c)(2)(A)), provides the general public and Federal agencies with an opportunity to comment on proposed, revised, and continuing collections of information. This helps the Department assess the impact of its information collection requirements and minimize the public's reporting burden. It also helps the public understand the Department's information collection requirements and provide the requested data in the desired format. ED is

soliciting comments on the proposed information collection request (ICR) that is described below. The Department of Education is especially interested in public comment addressing the following issues: (1) Is this collection necessary to the proper functions of the Department; (2) will this information be processed and used in a timely manner; (3) is the estimate of burden accurate; (4) how might the Department enhance the quality, utility, and clarity of the information to be collected; and (5) how might the Department minimize the burden of this collection on the respondents, including through the use of information technology. Please note that written comments received in response to this notice will be considered public records.

Title of Collection: School Pulse Panel Data Collection Activities.

OMB Control Number: 1850–NEW.

Type of Review: A new information collection.

Respondents/Affected Public: State, Local, and Tribal Governments.

Total Estimated Number of Annual Responses: 17,280.

Total Estimated Number of Annual Burden Hours: 4,752.

Abstract: The School Pulse Panel is a new study conducted by the National Center for Education Statistics (NCES), part of the Institute of Education Sciences (IES), within the United States Department of Education, to collect extensive data on issues concerning the impact of the COVID–19 pandemic on students and staff in U.S. public primary, middle, high, and combined-grade schools. The survey will ask school district staff and sampled school principals about topics such as instructional mode offered; enrollment counts of subgroups of students using various instructional modes; learning loss mitigation strategies; safe and healthy school mitigation strategies; special education services; use of technology; use of federal relief funds; and information on staffing. Because this data collection is extremely high priority and time sensitive, it has begun data collection under Emergency Clearance (see OMB# 1850–0963). NCES is also submitting this parallel ICR package to undergo the usual 60-day and 30-day clearance processes so that data collection can continue beyond the expiration of the emergency clearance. NCES is not submitting documents for review at this time; associated materials can be found under the OMB control number 1850–0963 (ED–2021–SCC–0149). New and revised documents will be included under this new number during the 30-day public review period.

The administration of the School Pulse Panel study is in direct response to President Biden's Executive Order 14000: Supporting the Reopening and Continuing Operation of Schools and Early Childhood Education Providers. It will be one of the nation's few sources of reliable data on a wealth of information focused on school reopening efforts, virus spread mitigation strategies, services offered for students and staff, and technology use, as reported by school district staff and principals in U.S. public schools. About 1200 public elementary, middle, high, and combined-grade schools will be selected to participate in a panel where school and district staff will be asked to provide requested data monthly during the 2021–22 school years. This approach provides the ability to collect detailed information on various topics while also assessing changes in reopening efforts over time. Given the high demand for data collection during this time, the content of the survey may change on a quarterly basis.

Dated: October 28, 2021.

Stephanie Valentine,

PRA Coordinator, Strategic Collections and Clearance, Governance and Strategy Division, Office of Chief Data Officer, Office of Planning, Evaluation and Policy Development.

[FR Doc. 2021–23841 Filed 11–1–21; 8:45 am]

BILLING CODE 4000–01–P

DEPARTMENT OF ENERGY

President's Council of Advisors on Science and Technology

AGENCY: Office of Science, Department of Energy.

ACTION: Notice of open virtual meeting.

SUMMARY: This notice announces an open meeting of the President's Council of Advisors on Science and Technology (PCAST). The Federal Advisory Committee Act (FACA) requires that public notice of these meetings be announced in the **Federal Register**.

DATES: Monday, November 29, 2021; 12:15 p.m. to 4:30 p.m. ET.

ADDRESSES: Information to participate virtually can be found on the PCAST website closer to the meeting at: *www.whitehouse.gov/PCAST/meetings.*

FOR FURTHER INFORMATION CONTACT: Dr. Sarah Domnitz, Designated Federal Officer, PCAST, email: *PCAST@ostp.eop.gov* or telephone: (202) 881–6399.

SUPPLEMENTARY INFORMATION: PCAST is an advisory group of the nation's leading scientists and engineers, appointed by the President to augment the science and technology advice available to him from the White House, cabinet departments, and other Federal agencies. See the Executive Order at *www.whitehouse.gov.* PCAST is consulted on and provides analyses and recommendations concerning a wide range of issues where understanding of science, technology, and innovation may bear on the policy choices before the President. The Designated Federal Officer is Dr. Sarah Domnitz. Information about PCAST can be found at: *www.whitehouse.gov/PCAST.*

Tentative Agenda: PCAST will hear from invited speakers on and discuss various aspects of biomanufacturing, the Federal science and technology workforce, and the National Nanotechnology Initiative. Additional information and the meeting agenda, including any changes that arise, will be posted on the PCAST website at: *www.whitehouse.gov/PCAST/meetings.*

Public Participation: The meeting is open to the public. It is the policy of the PCAST to accept written public comments no longer than 10 pages and to accommodate oral public comments whenever possible. The PCAST expects that public statements presented at its meetings will not be repetitive of previously submitted oral or written statements.

The public comment period for this meeting will take place on November 29, 2021, at a time specified in the meeting agenda. This public comment period is designed only for substantive commentary on PCAST's work, not for business marketing purposes.

Oral Comments: To be considered for the public speaker list at the meeting, interested parties should register to speak at *PCAST@ostp.eop.gov,* no later than 12:00 p.m. Eastern Time on November 22, 2021. To accommodate as many speakers as possible, the time for public comments will be limited to two (2) minutes per person, with a total public comment period of up to 10 minutes. If more speakers register than there is space available on the agenda, PCAST will select speakers on a first-come, first-served basis from those who registered. Those not able to present oral comments may file written comments with the council.

Written Comments: Although written comments are accepted continuously, written comments should be submitted to *PCAST@ostp.eop.gov* no later than 12:00 p.m. Eastern Time on November 22, 2021, so that the comments may be made available to the PCAST members for their consideration prior to this meeting.

PCAST operates under the provisions of FACA, all public comments and/or presentations will be treated as public documents and will be made available for public inspection, including being posted on the PCAST website at: *www.whitehouse.gov/PCAST/meeting.*

Minutes: Minutes will be available within 45 days at: *www.whitehouse.gov/PCAST/meetings.*

Signed in Washington, DC, on October 27, 2021.

LaTanya Butler,

Deputy Committee Management Officer.

[FR Doc. 2021–23844 Filed 11–1–21; 8:45 am]

BILLING CODE 6450–01–P

DEPARTMENT OF ENERGY

Federal Energy Regulatory Commission

[Project No. 4718–039]

Cocheco Falls Associates; Notice of Waiver Period for Water Quality Certification Application

On October 12, 2021, Cocheco Falls Associates submitted to the Federal Energy Regulatory Commission a copy of its application for a Clean Water Act section 401(a)(1) water quality certification filed with the New Hampshire Department of Environmental Services (New Hampshire DES), in conjunction with the above captioned project. Pursuant to 40 CFR 121.6, we hereby notify the New Hampshire DES of the following:

Date of Receipt of the Certification Request: October 11, 2021.

Reasonable Period of Time To Act on the Certification Request: One year (October 11, 2022).

If New Hampshire DES fails or refuses to act on the water quality certification request on or before the above date, then the agency's certifying authority is deemed waived pursuant to section 401(a)(1) of the Clean Water Act, 33 U.S.C. 1341(a)(1).

Dated: October 27, 2021.

Kimberly D. Bose,

Secretary.

[FR Doc. 2021–23860 Filed 11–1–21; 8:45 am]

BILLING CODE 6717–01–P

DEPARTMENT OF ENERGY

Federal Energy Regulatory Commission

[Docket No. IC21–35–000]

Commission Information Collection Activities (Ferc–587 Comment Request; Extension)

AGENCY: Federal Energy Regulatory Commission, Department of Energy.

ACTION: Notice of information collection and request for comments.

SUMMARY: In compliance with the requirements of the Paperwork Reduction Act of 1995, the Federal Energy Regulatory Commission (Commission or FERC) is soliciting public comment on the currently approved information collection, FERC–587 (Land Description: Public Land States/Non-Public Land States), which will be submitted to the Office of Management and Budget (OMB) for a review of the information collection requirements.

DATES: Comments on the collection of information are due December 2, 2021.

ADDRESSES: Send written comments on FERC–587 to OMB through *www.reginfo.gov/public/do/PRAMain,* Attention: Federal Energy Regulatory Commission Desk Officer. Please identify the OMB control number (1902–0145) in the subject line. Your comments should be sent within 30 days of publication of this notice in the **Federal Register**.

Please submit copies of your comments (identified by Docket No. IC21–35–000) to the Commission as noted below. Electronic filing through *http://www.ferc.gov,* is preferred.

- *Electronic Filing:* Documents must be filed in acceptable native applications and print-to-PDF, but not in scanned or picture format.
- For those unable to file electronically, comments may be filed by USPS mail or by hand (including courier) delivery.
  - *Mail via U.S. Postal Service Only:* Addressed to: Federal Energy Regulatory Commission, Secretary of the Commission, 888 First Street NE, Washington, DC 20426.
  - *Hand (Including Courier) Delivery:* Deliver to: Federal Energy Regulatory Commission, 12225 Wilkins Avenue, Rockville, MD 20852.

Instructions:

OMB submissions must be formatted and filed in accordance with submission guidelines at *www.reginfo.gov/public/do/PRAMain*; Using the search function under the ''Currently Under Review field,'' select Federal Energy Regulatory Commission; click ''submit'' and select ''comment'' to the right of the subject collection.

FERC submissions must be formatted and filed in accordance with submission guidelines at: *http://www.ferc.gov.* For user assistance, contact FERC Online Support by email at *ferconlinesupport@ferc.gov,* or by phone at: (866) 208–3676 (toll-free).

Docket: Users interested in receiving automatic notification of activity in this docket or in viewing/downloading comments and issuances in this docket may do so at *http://www.ferc.gov.*

FOR FURTHER INFORMATION CONTACT: Ellen Brown may be reached by email at *DataClearance@FERC.gov* and telephone at (202) 502–8663.

SUPPLEMENTARY INFORMATION:

Title: Land Description: Public Land States/Non-Public Land States.

OMB Control No.: 1902–0145.

Type of Request: Three-year extension of FERC–587.

Abstract: Section 24 of the Federal Power Act (FPA) [1] requires the Commission to conduct this collection of information, which pertains to applications proposing hydropower projects, or changes to existing hydropower projects, within ''lands of the United States.'' FERC Form 587 consolidates the required information, including a description of the applicable U.S. lands and identification of hydropower project boundary maps associated with the applicable U.S. lands. An applicant must send FERC Form 587 both to the Commission and to the Bureau of Land Management (BLM) [2] state office where the project is located. The information consolidated in FERC Form 587 facilitates the reservation of U.S. lands as hydropower sites and the withdrawal of such lands from other uses.

Type of Respondents: Applicants proposing hydropower projects, or changes to existing hydropower projects, within lands of the United States.

Estimate of Annual Burden: The Commission estimates 70 responses, 70 hours, and $6,090 in costs annually for respondents. These burdens are itemized in the following table:

[1] 16 U.S.C. 818.

[2] The Bureau of Land Management is within the U.S. Department of the Interior.

A. Number of respondents	B. Annual number of responses per respondent	C. Total number of responses (column A × column B)	D. Average hour burden & cost per response [3]	E. Total annual burden hours & total annual cost (column C × column D)	F. Cost per respondent ($) (column E ÷ column A)
70	1	70	1 hour; $87.00	70 hours; $6,090	$87.00

Comments are invited on: (1) Whether the collection of information is necessary for the proper performance of the functions of the Commission, including whether the information will have practical utility; (2) the accuracy of the agency's estimate of the burden and cost of the collection of information, including the validity of the methodology and assumptions used; (3) ways to enhance the quality, utility and clarity of the information collection; and (4) ways to minimize the burden of the collection of information on those who are to respond, including the use of automated collection techniques or other forms of information technology.

Dated: October 27, 2021.

Kimberly D. Bose,

Secretary.

[FR Doc. 2021–23861 Filed 11–1–21; 8:45 am]

BILLING CODE 6717–01–P

DEPARTMENT OF ENERGY

Federal Energy Regulatory Commission

[Docket No. AD21–15–000]

Joint Federal-State Task Force on Electric Transmission; Notice of Meeting

As first announced in the Commission's August 30, 2021 order in the above-captioned docket,[1] the first public meeting of the Joint Federal-State Task Force on Electric Transmission (Task Force) will be held on Wednesday, November 10, 2021, from approximately 1:00 p.m. to 6:00 p.m. Eastern time. The meeting will be held at the Omni Louisville Hotel in Louisville, Kentucky. Commissioners may attend and participate in this meeting. Attached to this Notice is an agenda for the meeting.

Discussions at the meeting may involve issues raised in proceedings that are currently pending before the Commission. These proceedings include, but are not limited to:

	Docket No.
NextEra Energy SeaBrook, LLC	EL21–3–000
NECEC Transmission LLC and Avangrid, Inc. v. NextEra Energy Resources, LLC	EL21–6–000
Neptune Regional Transmission System, LLC and Long Island Power Authority v. PJM Interconnection, L.L.C	EL21–39–000
SOO Green HVDC Link ProjectCo, LLC v. PJM Interconnection, L.L.C	EL21–85–000
Duke Energy Florida, LLC v. Florida Power & Light Co. and Florida Power & Light Co. d/b/a Gulf Power	EL21–93–000
ISO New England Inc	EL21–94–000

The meeting will be open to the public for listening and observing and on the record. There is no fee for attendance and registration is not required. The public may attend in person or via audio Webcast.[2] In light of the ongoing National Emergency concerning the Novel Coronavirus Disease (COVID–19), in-person seating for the conference will be limited and not guaranteed. Therefore, the public is encouraged to attend via audio Webcast. This conference will be transcribed. Transcripts will be available for a fee from Ace Reporting, 202–347–3700.

Commission conferences are accessible under section 508 of the Rehabilitation Act of 1973. For accessibility accommodations, please send an email to *accessibility@ferc.gov* or call toll free 1–866–208–3372 (voice) or 202–208–8659 (TTY), or send a fax to 202–208–2106 with the required accommodations.

More information about the Task Force, including frequently asked questions, is available here: *https://www.ferc.gov/TFSOET*. For more information about this meeting, please contact: Gretchen Kershaw, 202–502–8213, *gretchen.kershaw@ferc.gov*; or Jennifer Murphy, 202–898–1350, *jmurphy@naruc.org*. For information related to logistics, please contact Benjamin Williams, 202–502–8506, *benjamin.williams@ferc.gov*; or Rob Thormeyer, 202–502–8694, *robert.thormeyer@ferc.gov*.

Dated: October 27, 2021.

Kimberly D. Bose,

Secretary.

[FR Doc. 2021–23864 Filed 11–1–21; 8:45 am]

BILLING CODE 6717–01–P

DEPARTMENT OF ENERGY

Federal Energy Regulatory Commission

[Docket No. CP21–6–000]

Spire Storage West, LLC; Notice of Availability of the Draft Environmental Impact Statement for the Proposed Clear Creek Expansion Project

The staff of the Federal Energy Regulatory Commission (FERC or Commission) has prepared a draft environmental impact statement (EIS) for the Clear Creek Expansion Project, proposed by Spire Storage West, LLC (Spire) in the above-referenced docket. Spire requests authorization to construct, expand, and operate natural gas transmission and storage facilities at Spire's existing Clear Creek Storage Field in order to increase the certificated gas capacities from 4.0 billion cubic feet (Bcf) to 20 Bcf, and

[3] Commission staff estimates that the average industry hourly cost for this information collection is approximated by the current FERC 2021 average hourly costs for wages and benefits, *i.e.,* $87.00/hour.

[1] *Joint Federal-State Task Force on Electric Transmission,* 176 FERC ¶ 61,131 (2021).

[2] A link to the Webcast will be available here on the day of the event: *https://www.ferc.gov/TFSOET*.

increase the maximum daily injection and withdrawal capacities. Spire would also construct 10.6 miles of 20- and 24-inch-diameter pipeline to connect with the Canyon Creek Plant and the Kern River Gas Transmission mainline, and to reconnect with the Questar Pipeline at the Clear Creek Plant in Uinta County, Wyoming.

The draft EIS assesses the potential environmental effects of the construction and operation of the Clear Creek Expansion Project in accordance with the requirements of the National Environmental Policy Act (NEPA). The FERC staff concludes that approval of the proposed project, with the mitigation measures recommended in the EIS, would not result in significant environmental impacts, with the exception of climate change impacts. FERC staff continues to be unable to determine significance with regards to climate change impacts. Most adverse environmental impacts would be temporary or short-term during construction and have minimal effects on existing land use, as the proposed facilities would be added within an area already characterized by energy production and transmission facilities.

The U.S. Bureau of Land Management participated as a cooperating agency in the preparation of the EIS. Cooperating agencies have jurisdiction by law or special expertise with respect to resources potentially affected by the proposal and participate in the NEPA analysis. The U.S. Bureau of Land Management will adopt and use the EIS to satisfy its requirements under NEPA as part of Spire's application. Section 28 of the Mineral Leasing Act authorizes the BLM to issue a Right-of-Way Grant, Application for Permits to Drill, and Temporary Use Permits for the portions of the Project that would encroach on any federal lands in the Project area. Although the cooperating agency provided input to the conclusions and recommendations presented in the draft EIS, the agency will present its own conclusions and recommendations in its respective Record of Decision for the project.

The draft EIS addresses the potential environmental effects of the construction and operation of the following project facilities:

- Four compressor units at the Clear Creek Plant;
- a tank storage and natural gas liquids fueling equipment facility on an existing pad;
- 11 new injection/withdrawal wells, one new water disposal well, and associated lines;
- approximately 7.0 miles of 20-inch-diameter pipeline;
- approximately 3.6 miles of 24-inch diameter pipeline; and
- approximately 3.5 miles of 4,160-volt powerline; and other related appurtenances.

The Commission mailed a copy of the *Notice of Availability* to federal, state, and local government representatives and agencies; elected officials; environmental and public interest groups; Native American tribes; potentially affected landowners and other interested individuals and groups; and newspapers and libraries in the project area. The draft EIS is only available in electronic format. It may be viewed and downloaded from the FERC's website (*www.ferc.gov*), on the natural gas environmental documents page (*https://www.ferc.gov/industries-data/natural-gas/environment/environmental-documents*). In addition, the draft EIS may be accessed by using the eLibrary link on the FERC's website. Click on the eLibrary link (*https://elibrary.ferc.gov/eLibrary/search*) select ''General Search'' and enter the docket number in the ''Docket Number'' field, excluding the last three digits (*i.e.,* CP21–6). Be sure you have selected an appropriate date range. For assistance, please contact FERC Online Support at *FercOnlineSupport@ferc.gov* or toll free at (866) 208–3676, or for TTY, contact (202) 502–8659.

The draft EIS is not a decision document. It presents Commission staff's independent analysis of the environmental issues for the Commission to consider when addressing the merits of all issues in this proceeding. Any person wishing to comment on the draft EIS may do so. Your comments should focus on draft EIS's disclosure and discussion of potential environmental effects, measures to avoid or lessen environmental impacts, and the completeness of the submitted alternatives, information and analyses. To ensure consideration of your comments on the proposal in the final EIS, it is important that the Commission receive your comments on or before 5:00pm Eastern Time on December 20, 2021.

For your convenience, there are three methods you can use to submit your comments to the Commission. The Commission encourages electronic filing of comments and has staff available to assist you at (866) 208–3676 or *FercOnlineSupport@ferc.gov.* Please carefully follow these instructions so that your comments are properly recorded.

(1) You can file your comments electronically using the eComment feature on the Commission's website (*www.ferc.gov*) under the link to FERC Online. This is an easy method for submitting brief, text-only comments on a project;

(2) You can file your comments electronically by using the eFiling feature on the Commission's website (*www.ferc.gov*) under the link to FERC Online. With eFiling, you can provide comments in a variety of formats by attaching them as a file with your submission. New eFiling users must first create an account by clicking on ''eRegister.'' If you are filing a comment on a particular project, please select ''Comment on a Filing'' as the filing type; or

(3) You can file a paper copy of your comments by mailing them to the Commission. Be sure to reference the project docket number (CP21–6–000) on your letter. Submissions sent via the U.S. Postal Service must be addressed to: Kimberly D. Bose, Secretary, Federal Energy Regulatory Commission, 888 First Street NE, Room 1A, Washington, DC 20426. Submissions sent via any other carrier must be addressed to: Kimberly D. Bose, Secretary, Federal Energy Regulatory Commission, 12225 Wilkins Avenue, Rockville, Maryland 20852.

Any person seeking to become a party to the proceeding must file a motion to intervene pursuant to Rule 214 of the Commission's Rules of Practice and Procedures (18 CFR part 385.214). Motions to intervene are more fully described at *https://www.ferc.gov/ferc-online/ferc-online/how-guides.* Only intervenors have the right to seek rehearing or judicial review of the Commission's decision. The Commission grants affected landowners and others with environmental concerns intervenor status upon showing good cause by stating that they have a clear and direct interest in this proceeding which no other party can adequately represent. Simply filing environmental comments will not give you intervenor status, but you do not need intervenor status to have your comments considered.

Questions?

Additional information about the project is available from the Commission's Office of External Affairs, at (866) 208–FERC, or on the FERC website (*www.ferc.gov*) using the eLibrary link. The eLibrary link also provides access to the texts of all formal documents issued by the Commission, such as orders, notices, and rulemakings.

In addition, the Commission offers a free service called eSubscription that allows you to keep track of all formal

issuances and submittals in specific dockets. This can reduce the amount of time you spend researching proceedings by automatically providing you with notification of these filings, document summaries, and direct links to the documents. Go to *https://www.ferc.gov/ferc-online/overview* to register for eSubscription.

Dated: October 27, 2021.

Kimberly D. Bose,

Secretary.

[FR Doc. 2021–23859 Filed 11–1–21; 8:45 am]

BILLING CODE 6717–01–P

DEPARTMENT OF ENERGY

Federal Energy Regulatory Commission

[Project No. 2354–152]

Georgia Power Company; Notice of Application Accepted for Filing and Soliciting Comments, Motions To Intervene, and Protests

Take notice that the following hydroelectric application has been filed with the Commission and is available for public inspection:

a. *Application Type:* Non-Capacity Amendment of License.

b. *Project No:* 2354–152.

c. *Date Filed:* September 24, 2021, and supplemented on October 21, 2021.

d. *Applicants:* Georgia Power Company.

e. *Name of Project:* North Georgia Project.

f. *Location:* Savannah River basin on the Tallulah, Chattooga, and Tugalo Rivers, in Rabun, Habersham, and Stephens counties, Georgia, and Oconee County, South Carolina.

g. *Filed Pursuant to:* Federal Power Act, 16 U.S.C. 791a—825r.

h. *Applicant Contact:* Courtenay O'Mara, Hydro Licensing & Compliance Supervisor, 241 Ralph McGill Boulevard NE, BIN 10193, Atlanta, Georgia 30308–3374, 404–506–7219, *cromara@southernco.com.*

i. *FERC Contact:* Aneela Mousam, (202) 502–8357, *aneela.mousam@ferc.gov.*

j. Deadline for filing comments, motions to intervene, and protests is 30 days from the issuance date of this notice by the Commission.

The Commission strongly encourages electronic filing. Please file comments, motions to intervene, and protests using the Commission's eFiling system at *http://www.ferc.gov/docs-filing/efiling.asp.* Commenters can submit brief comments up to 6,000 characters, without prior registration, using the eComment system at *http://www.ferc.gov/docs-filing/ecomment.asp.* You must include your name and contact information at the end of your comments. For assistance, please contact FERC Online Support at *FERCOnlineSupport@ferc.gov,* (866) 208–3676 (toll free), or (202) 502–8659 (TTY). In lieu of electronic filing, you may submit a paper copy. Submissions sent via the U.S. Postal Service must be addressed to: Kimberly D. Bose, Secretary, Federal Energy Regulatory Commission, 888 First Street NE, Room 1A, Washington, DC 20426. Submissions sent via any other carrier must be addressed to: Kimberly D. Bose, Secretary, Federal Energy Regulatory Commission, 12225 Wilkins Avenue, Rockville, Maryland 20852. The first page of any filing should include the docket number P–2354–152. Comments emailed to Commission staff are not considered part of the Commission record.

The Commission's Rules of Practice and Procedure require all intervenors filing documents with the Commission to serve a copy of that document on each person whose name appears on the official service list for the project. Further, if an intervenor files comments or documents with the Commission relating to the merits of an issue that may affect the responsibilities of a particular resource agency, they must also serve a copy of the document on that resource agency.

k. *Description of Request:* Georgia Power Company (licensee) is requesting Commission approval to replace and upgrade four generating units in the Tugalo powerhouse. The licensee proposes to upgrade and rehabilitate the four project turbines, rewind and refurbish the generators, and replace the control room panels, intake trash racks and spillway gates. The unit modifications are expected to increase the rating for each unit by 4.75 megawatts each and decrease the maximum hydraulic capacity by 12.3 percent from 1,710 cubic feet per second (cfs) to 1,500 cfs. The licensee does not anticipate any impact on current flow, lake levels, or aquatic life.

l. *Locations of the Application:* The Commission provides all interested persons an opportunity to view and/or print the contents of this document via the internet through the Commission's website at *http://www.ferc.gov/docs-filing/elibrary.asp.* Enter the docket number excluding the last three digits in the docket number field to access the document. You may also register online at *http://www.ferc.gov/docs-filing/esubscription.asp* to be notified via email of new filings and issuances related to this or other pending projects. Agencies may obtain copies of the application directly from the applicant. At this time, the Commission has suspended access to the Commission's Public Reference Room due to the proclamation declaring a National Emergency concerning the Novel Coronavirus Disease (COVID–19), issued by the President on March 13, 2020. For assistance, contact the Federal Energy Regulatory Commission at *FERCOnlineSupport@ferc.gov* or call toll free, (866) 208–3676 or TTY, (202) 502–8659.

m. Individuals desiring to be included on the Commission's mailing list should so indicate by writing to the Secretary of the Commission.

n. *Comments, Protests, or Motions to Intervene:* Anyone may submit comments, a protest, or a motion to intervene in accordance with the requirements of Rules of Practice and Procedure, 18 CFR 385.210, .211, .214, respectively. In determining the appropriate action to take, the Commission will consider all protests or other comments filed, but only those who file a motion to intervene in accordance with the Commission's Rules may become a party to the proceeding. Any comments, protests, or motions to intervene must be received on or before the specified comment date for the particular application.

o. *Filing and Service of Documents:* Any filing must (1) bear in all capital letters the title ''COMMENTS'', ''PROTEST'', or ''MOTION TO INTERVENE'' as applicable; (2) set forth in the heading the name of the applicant and the project number of the application to which the filing responds; (3) furnish the name, address, and telephone number of the person commenting, protesting or intervening; and (4) otherwise comply with the requirements of 18 CFR 385.2001 through 385.2005. All comments, motions to intervene, or protests must set forth their evidentiary basis. Any filing made by an intervenor must be accompanied by proof of service on all persons listed in the service list prepared by the Commission in this proceeding, in accordance with 18 CFR 385.2010.

Dated: October 27, 2021.

Kimberly D. Bose,

Secretary.

[FR Doc. 2021–23862 Filed 11–1–21; 8:45 am]

BILLING CODE 6717–01–P

ENVIRONMENTAL PROTECTION AGENCY

[CERCLA–04–2021–2502; FRL–8906–01–R4]

LL Harwell Road Private Well Contamination Superfund Site Gastonia, North Carolina; Notice of Settlement

AGENCY: Environmental Protection Agency (EPA)

ACTION: Notice of proposed settlement.

SUMMARY: Under the Comprehensive Environmental Response, Compensation and Liability Act (CERCLA), the United States Environmental Protection Agency is proposing to enter into an Administrative Settlement Agreement and Order on Consent with Textron, Inc. concerning the LL Harwell Road Private Well Contamination Superfund Site located in Gastonia, North Carolina. The settlement addresses recovery of CERCLA costs for a cleanup action performed by the EPA at the Site.

DATES: The Agency will consider public comments on the settlement until December 2, 2021. The Agency will consider all comments received and may modify or withdraw its consent to the proposed settlement, if comments received disclose facts or considerations which indicate that the proposed settlement is inappropriate, improper or inadequate.

ADDRESSES: Copies of the settlement are available from the Agency by contacting Ms. Paula V. Painter, Program Analyst, using the contact information provided in this notice. Comments may also be submitted by referencing the Site's name through one of the following methods:

Internet: https://www.epa.gov/aboutepa/about-epa-region-4-southeast#r4-public-notices.

Email: Painter.Paula@epa.gov.

FOR FURTHER INFORMATION CONTACT: Paula V. Painter at (404) 562–8887.

Maurice Horsey,

Chief, Enforcement Branch, Superfund & Emergency Management Division.

[FR Doc. 2021–23887 Filed 11–1–21; 8:45 am]

BILLING CODE 6560–50–P

ENVIRONMENTAL PROTECTION AGENCY

[EPA–HQ–OPPT–2015–0436; FRL–9088–01–OCSPP]

Agency Information Collection Activities; Proposed Revision to an Existing Collection, Generic Clearance for TSCA Section 4 Test Rules, Test Orders, Enforceable Consent Agreements (ECAs), Voluntary Data Submissions, and Exemptions From Testing Requirements; Comment Request

AGENCY: Environmental Protection Agency (EPA).

ACTION: Notice.

SUMMARY: In compliance with the Paperwork Reduction Act (PRA), this document announces that EPA is planning to submit the following Information Collection Request (ICR) to the Office of Management and Budget (OMB): ''Generic Clearance for TSCA Section 4 Test Rules, Test Orders, Enforceable Consent Agreements (ECAs), Voluntary Data Submissions, and Exemptions from Testing Requirements),'' and identified by EPA ICR No. 1139.25 and approved under OMB Control No. 2070–0033. This ICR incorporates the activities and burdens recently approved under a separate ICR entitled ''User Guide for submitting TSCA Section 4 Test Order Information,'' and identified by EPA ICR No. 2697.01 and approved under OMB Control No. 2070–0215, which is scheduled to expire on April 30, 2022. Merging these ICRs before that expiration is appropriate because the activities are integrated components of the same information collection program. Before submitting the ICR to OMB for review and approval under the PRA, EPA is soliciting comments on specific aspects of the proposed information collection that is summarized in this document. The ICR and accompanying material are available in the docket for public review and comment.

DATES: Comments must be received on or before January 3, 2022.

ADDRESSES: Submit your comments, identified by docket identification (ID) number EPA–HQ–OPPT–2015–0436, through the Federal eRulemaking Portal at *http://www.regulations.gov.* Follow the online instructions for submitting comments. Do not submit electronically any information you consider to be Confidential Business Information (CBI) or other information whose disclosure is restricted by statute. Additional instructions on commenting or visiting the docket, along with more information about dockets generally, is available at *http://www.epa.gov/dockets.*

Due to the public health concerns related to COVID–19, the EPA Docket Center (EPA/DC) is by appointment only. For the latest status information on EPA/DC and docket access, visit *https://www.epa.gov/dockets.*

FOR FURTHER INFORMATION CONTACT: David Turk (7410M), Office of Pollution Prevention and Toxics, Environmental Protection Agency, 1200 Pennsylvania Ave. NW, Washington, DC 20460–0001; telephone number: (202) 566–1527; email address: *turk.david@epa.gov.*

For general information contact: The TSCA-Hotline, ABVI-Goodwill, 422 South Clinton Ave., Rochester, NY 14620; telephone number: (202) 554–1404; email address: *TSCA-Hotline@epa.gov.*

SUPPLEMENTARY INFORMATION:

I. What information is EPA particularly interested in?

Pursuant to PRA section 3506(c)(2)(A), 44 U.S.C. 3506(c)(2)(A), EPA specifically solicits comments and information to enable it to:

1. Evaluate whether the proposed collection of information is necessary for the proper performance of the functions of the Agency, including whether the information will have practical utility.
2. Evaluate the accuracy of the Agency's estimates of the burden of the proposed collection of information, including the validity of the methodology and assumptions used.
3. Enhance the quality, utility, and clarity of the information to be collected.
4. Minimize the burden of the collection of information on those who are to respond, including through the use of appropriate automated electronic, mechanical, or other technological collection techniques or other forms of information technology, *e.g.,* permitting electronic submission of responses. In particular, EPA is requesting comments from very small businesses (those that employ less than 25) on examples of specific additional efforts that EPA could make to reduce the paperwork burden for very small businesses affected by this collection.

II. What information collection activity or ICR does this action apply to?

Title: Generic Clearance for TSCA Section 4 Test Rules, Test Orders, Enforceable Consent Agreements (ECAs), Voluntary Data Submissions, and Exemptions from Testing Requirements (Revision).

EPA ICR number: 1139.25.

OMB control number: 2070–0033.

ICR status: This ICR Revision incorporates the activities and burdens currently contained in another ICR that is scheduled to expire on April 30, 2022. The existing ICR that is being revised is currently scheduled to expire on December 31, 2023. An Agency may not conduct or sponsor, and a person is not required to respond to, a collection of information, unless it displays a currently valid OMB control number. The OMB control numbers for EPA's regulations in title 40 of the Code of Federal Regulations (CFR), after appearing in the **Federal Register** when approved, are listed in 40 CFR part 9, are displayed either by publication in the **Federal Register** or by other appropriate means, such as on the related collection instrument or form, if applicable. The display of OMB control numbers for certain EPA regulations is consolidated in 40 CFR part 9.

Abstract: This generic ICR covers the information collection activities associated with the submission of information to EPA pursuant to TSCA section 4 regulatory actions. (15 U.S.C. 2603). Under TSCA, EPA has the authority to issue regulatory actions designed to gather or develop health and safety information and exposure information on chemical substances and mixtures, and to control unreasonable risks associated with new and existing chemical substances. TSCA section 4 authorities allow EPA to require the development of information related to chemicals and the use of prescribed ''protocols and methodologies'' in order to inform EPA and other federal agencies about chemical risks, which in turn will inform decision makers for purposes of prioritization for risk evaluation, risk evaluation and risk management of those chemicals as necessary.

This revision incorporates the activities and burdens associated with the guidance documents and outreach to stakeholders about submitting Test Orders to the Agency that were recently approved under a separate ICR entitled ''User Guide for submitting TSCA Section 4 Test Order Information,'' and identified by EPA ICR No. 2697.01 and approved under OMB Control No. 2070–0215, which is scheduled to expire on April 30, 2022. Merging these ICRs is appropriate because the activities are integrated components of the same information collection program. Upon approval of this revised Generic ICR, EPA will be able to discontinue that ICR because the activities and burden will be covered by this revised ICR.

Burden statement: The annual public reporting and recordkeeping burden for this collection of information is estimated to annual average 137 hours per response. Burden is defined in 5 CFR 1320.3(b).

The ICR, which is available in the docket along with other related materials, provides a detailed explanation of the collection activities and the burden estimate that is only briefly summarized here:

Respondents/Affected Entities: Entities potentially affected by this ICR are manufacturers (including imports) or processors of chemical substances of mixtures, which are mostly chemical companies classified under NAICS Code 325 and 324.

Respondent's obligation to respond: Mandatory, 15 U.S.C 2603.

Estimated total number of potential respondents: 175.

Frequency of response: On occasion.

Estimated total average number of responses for each respondent: 1.5.

Estimated total annual burden hours: 32,435 hours.

Estimated total annual costs: $8,072,601, includes $5,447,620 annualized capital or operation and maintenance costs.

III. Are there changes in the estimates from the last approval?

There is an overall increase of 288 hours in the total respondent burden that is currently approved by OMB for this ICR. This increase reflects the incorporation of the activities and burdens associated with the addition of guidance documents and pre-issuance outreach for Test Orders recipients.

IV. What is the next step in the process for this ICR?

EPA will consider the comments received and amend the ICR as appropriate. The final ICR package will then be submitted to OMB for review and approval pursuant to 5 CFR 1320.12. EPA will issue another **Federal Register** document pursuant to 5 CFR 1320.5(a)(1)(iv) to announce the submission of the ICR to OMB and the opportunity to submit additional comments to OMB. If you have any questions about this ICR or the approval process, please contact the person listed under **FOR FURTHER INFORMATION CONTACT**.

Authority: 44 U.S.C. 3501 *et seq.*

Dated: October 27, 2021.

Michal Freedhoff,

Assistant Administrator, Office of Chemical Safety and Pollution Prevention.

[FR Doc. 2021–23830 Filed 11–1–21; 8:45 am]

BILLING CODE 6560–50–P

FEDERAL RESERVE SYSTEM

Formations of, Acquisitions by, and Mergers of Bank Holding Companies

The companies listed in this notice have applied to the Board for approval, pursuant to the Bank Holding Company Act of 1956 (12 U.S.C. 1841 *et seq.*) (BHC Act), Regulation Y (12 CFR part 225), and all other applicable statutes and regulations to become a bank holding company and/or to acquire the assets or the ownership of, control of, or the power to vote shares of a bank or bank holding company and all of the banks and nonbanking companies owned by the bank holding company, including the companies listed below.

The public portions of the applications listed below, as well as other related filings required by the Board, if any, are available for immediate inspection at the Federal Reserve Bank(s) indicated below and at the offices of the Board of Governors. This information may also be obtained on an expedited basis, upon request, by contacting the appropriate Federal Reserve Bank and from the Board's Freedom of Information Office at *https://www.federalreserve.gov/foia/request.htm.* Interested persons may express their views in writing on the standards enumerated in the BHC Act (12 U.S.C. 1842(c)).

Comments regarding each of these applications must be received at the Reserve Bank indicated or the offices of the Board of Governors, Ann E. Misback, Secretary of the Board, 20th Street and Constitution Avenue NW, Washington, DC 20551–0001, not later than December 2, 2021.

A. Federal Reserve Bank of Minneapolis (Chris P. Wangen, Assistant Vice President), 90 Hennepin Avenue, Minneapolis, Minnesota 55480–0291. Comments can also be sent electronically to *MA@mpls.frb.org:*

1. *Entrepreneurs Bancshares, Inc., Bloomington, Minnesota;* to become a bank holding company by acquiring a de novo bank, EntreBank, Bloomington, Minnesota.

Board of Governors of the Federal Reserve System, October 28, 2021.

Michele Taylor Fennell,

Deputy Associate Secretary of the Board.

[FR Doc. 2021–23867 Filed 11–1–21; 8:45 am]

BILLING CODE 6210–01–P

DEPARTMENT OF HEALTH AND HUMAN SERVICES

Centers for Disease Control and Prevention

[Docket Number CDC–2021–0115, NIOSH–343]

The Need To Establish Personal Protective Technology Centers of Excellence To Address Research and Practice Gaps

AGENCY: Centers for Disease Control and Prevention, HHS.

ACTION: Request for information.

SUMMARY: The National Institute for Occupational Safety and Health (NIOSH), within the Centers for Disease Control and Prevention (CDC), is soliciting public comment on the need to establish centers of excellence to address research and practice needs in the area of personal protective technology (PPT), including personal protective equipment.

DATES: Comments must be received by January 31, 2022.

ADDRESSES: Comments may be submitted through either of the following two methods:

- *Federal eRulemaking Portal: https://www.regulations.gov* (follow the instructions for submitting comments), or
- *Mail:* NIOSH Docket Office, 1090 Tusculum Avenue, MS C–34, Cincinnati, Ohio 45226–1998.

Instructions: All written submissions received in response to this notice must include the agency name (Centers for Disease Control and Prevention, HHS) and docket number (CDC–2021–0115; NIOSH–343). All relevant comments received will be posted without change to *https://www.regulations.gov,* including any personal information provided.

FOR FURTHER INFORMATION CONTACT: Patrick G. Dempsey, Ph.D.; email: *odadmin@cdc.gov;* telephone 412–386–6480 [not a toll-free number].

SUPPLEMENTARY INFORMATION: Within NIOSH, the National Personal Protective Technology Laboratory is charged with preventing disease, injury, and death among the millions of American workers who rely on PPT. To accomplish this mission, NIOSH conducts scientific research, leads PPT conformity assessment efforts, develops guidance and authoritative recommendations, disseminates information, and responds to requests for workplace health hazard evaluations.

Personal protective technology—such as respirators, protective clothing, gloves, eyewear, hearing protection, helmets, fit testing equipment, and fall harnesses—is instrumental in protecting the health and safety of workers in the United States and globally. Due to the comprehensive and inter-/multi-disciplinary nature of PPT, innovative thinking and approaches are necessary to advance and maximize its role in enhancing occupational safety and health.

In 2008, the Institute of Medicine (IOM) and the National Research Council (NRC) of the National Academies convened a committee to appraise the NIOSH intramural PPT Program to ''evaluate the relevance and impact of a dozen specific elements of the PPT Program in preventing work-related injury and illness, identify important future considerations for scientific investigation, and provide recommendations for program improvement.'' [1] The committee offered five recommendations; Recommendation 2 suggested that NIOSH ''should establish and sustain extramural PPT centers of excellence and work to increase other extramural research opportunities.'' Specifically, the committee recommended that the intramural PPT Program ''[d]evelop and support research centers of excellence that work closely with the NIOSH intramural research program to improve PPT, increase field research, and explore and implement research to practice interventions.'' [2] Benefits and advantages of this approach include increased interdisciplinary expertise and improved ability to evaluate interventions (*e.g.,* emerging technologies), extending the scope of scientific inquiry to include the behavioral sciences, and increasing field research.

Request for Information

In response to the IOM/NRC recommendation, NIOSH is exploring the establishment of centers of excellence dedicated to advancing PPT and serving as knowledge hubs where experts from multiple disciplines, industry representatives, and other interested parties/groups collaborate on PPT research and practice. To accomplish that goal, NIOSH is seeking input from any interested party regarding the scope of future centers of excellence that could play critical roles in identifying research needs, conducting research, disseminating information including education and outreach activities, and translating research findings and technologies into products and practices that will enhance safety and health. The NIOSH National Personal Protective Technology Laboratory has identified the following three broad focus areas to be addressed by one or more future centers of excellence:

- Research and development of new technologies and approaches to PPT including sensor technology to increase efficacy;
- human factors/ergonomics approaches to evaluating the factors that influence the adoption and usage of PPT such as performance, comfort, fit, and usability; sociotechnical systems analyses of the influences of factors such as health and safety management systems, safety culture, and regulatory requirements; and
- innovative approaches to the design, manufacture, and maintenance of PPT that enhance factors such as the effectiveness and acceptance of PPT in varied user populations, availability, and the ability to rapidly customize and produce PPT during crises.

In addition to input on the three topic areas described above, NIOSH is seeking input on the following questions:

(1) What are the perceived needs for and benefits of establishing centers of excellence to advance PPT research and practice as it relates to your organization or for you personally?

(2) Are there specific PPT research and practice needs for certain industry sectors and/or occupations?

(3) Are there specific PPT research and practice needs for different types of hazards (*e.g.,* biological, chemical, gas and vapor, thermal, physical)?

(4) Are there specific PPT research and practice needs for certain anatomical categories of protection (*e.g.,* dermal, vision, hearing, respiratory)?

(5) Which particular academic disciplines, research domains, or technical expertise should contribute to addressing PPT research and practice needs? Describe multi- or inter-disciplinary needs to most effectively advance research and practice.

(6) Describe emerging or novel technologies that can be investigated with respect to increasing the effectiveness of PPT.

(7) How well do the three broad focus areas described above identify critical needs? Are there alternate or additional needs that have not been identified in this notice?

[1] Institute of Medicine and National Research Council. 2008. The Personal Protective Technology Program at NIOSH. Committee to Review the NIOSH Personal Protective Technology Program. Rpt. No. 5, Reviews of Research Programs of the National Institute for Occupational Safety and Health. Washington, DC: The National Academies Press, at ix.

[2] *Id* at 13–14.

(8) NIOSH anticipates that future PPT centers of excellence will include at least three functional core areas: *planning and evaluation,* which includes center of excellence administration; *research,* which can be comprised of pilot projects, small projects, and large projects; and *outreach,* which can include communication and dissemination activities, education activities, and implementation activities. An academic training functional core area is optional. How important are the different core areas and activities within core areas to the ability of centers of excellence to advance PPT research and practice?

Disclaimer and Important Notes

This notice is intended for planning purposes; it does not constitute a formal announcement for comprehensive applications. In accordance with Federal Acquisition Regulation 48 CFR 15.201(e), responses to this notice are not offers and cannot be accepted by the Government to form a binding award. NIOSH will not provide reimbursement for costs incurred in commenting on this notice.

NIOSH will not respond to individual public comments or publish publicly a compendium of responses. An informational submission in response to this notice does not create any commitment by or on behalf of CDC or HHS to develop or pursue any program or ideas discussed.

John J. Howard,

Director, National Institute for Occupational Safety and Health, Centers for Disease Control and Prevention, Department of Health and Human Services.

[FR Doc. 2021–23853 Filed 11–1–21; 8:45 am]

BILLING CODE 4163–18–P

DEPARTMENT OF HEALTH AND HUMAN SERVICES

Centers for Disease Control and Prevention

[60Day–22–1262; Docket No. CDC–2021–0111]

Proposed Data Collection Submitted for Public Comment and Recommendations

AGENCY: Centers for Disease Control and Prevention (CDC), Department of Health and Human Services (HHS).

ACTION: Notice with comment period.

SUMMARY: The Centers for Disease Control and Prevention (CDC), as part of its continuing effort to reduce public burden and maximize the utility of government information, invites the general public and other Federal agencies the opportunity to comment on a proposed and/or continuing information collection, as required by the Paperwork Reduction Act of 1995. This notice invites comment on a proposed information collection project titled National HIV Behavioral Surveillance among Transgender Women (NHBS-Trans). CDC is requesting approval to continue collecting standardized HIV-related behavioral data from transgender women at risk for HIV.

DATES: CDC must receive written comments on or before January 3, 2022.

ADDRESSES: You may submit comments, identified by Docket No. CDC–2021–0111 by any of the following methods:

- *Federal eRulemaking Portal: Regulations.gov.* Follow the instructions for submitting comments.
- *Mail:* Jeffrey M. Zirger, Information Collection Review Office, Centers for Disease Control and Prevention, 1600 Clifton Road NE, MS H21–8, Atlanta, Georgia 30329.

Instructions: All submissions received must include the agency name and Docket Number. CDC will post, without change, all relevant comments to *Regulations.gov.*

Please note: Submit all comments through the Federal eRulemaking portal (regulations.gov) or by U.S. mail to the address listed above.

FOR FURTHER INFORMATION CONTACT: To request more information on the proposed project or to obtain a copy of the information collection plan and instruments, contact Jeffrey M. Zirger, Information Collection Review Office, Centers for Disease Control and Prevention, 1600 Clifton Road NE, MS H21–8, Atlanta, Georgia 30329; phone: 404–639–7570; Email: *omb@cdc.gov.*

SUPPLEMENTARY INFORMATION: Under the Paperwork Reduction Act of 1995 (PRA) (44 U.S.C. 3501–3520), Federal agencies must obtain approval from the Office of Management and Budget (OMB) for each collection of information they conduct or sponsor. In addition, the PRA also requires Federal agencies to provide a 60-day notice in the **Federal Register** concerning each proposed collection of information, including each new proposed collection, each proposed extension of existing collection of information, and each reinstatement of previously approved information collection before submitting the collection to the OMB for approval. To comply with this requirement, we are publishing this notice of a proposed data collection as described below.

The OMB is particularly interested in comments that will help:

1. Evaluate whether the proposed collection of information is necessary for the proper performance of the functions of the agency, including whether the information will have practical utility;
2. Evaluate the accuracy of the agency's estimate of the burden of the proposed collection of information, including the validity of the methodology and assumptions used;
3. Enhance the quality, utility, and clarity of the information to be collected;
4. Minimize the burden of the collection of information on those who are to respond, including through the use of appropriate automated, electronic, mechanical, or other technological collection techniques or other forms of information technology, *e.g.,* permitting electronic submissions of responses; and
5. Assess information collection costs.

Proposed Project

National HIV Behavioral Surveillance System—among Transgender Women (NHBS-Trans) (OMB Control No. 0920–1262, Exp. 04/30/2022)—Revision—National Center for HIV/AIDS, Viral Hepatitis, STD, and TB Prevention (NCHHSTP), Centers for Disease Control and Prevention (CDC).

Background and Brief Description

The purpose of this data collection is to monitor behaviors of transgender women at high risk for infection that are related to Human Immunodeficiency Virus (HIV) transmission and prevention in the United States. This includes recruiting, interviewing and providing HIV testing and referral to services (as needed) following CDC protocol. The proposed respondents are 300 adult minority transgender women in up to 14 cities (4,200 interviews total) who will each respond one time over the course of the three-year pilot. The information will be collected over a three-year period beginning no later than two months after OMB approval. NHBS-Trans provides information to help prevent HIV among transgender women. Preventing HIV, especially among high-risk groups, is an effective strategy for reducing individual, local, and national healthcare costs. The utility of this information is to provide CDC and local health department staff with data for evaluating progress towards local and national public health goals, such as reducing new HIV infections, increasing the use of condoms, and targeting high risk groups by describing and monitoring the HIV risk behaviors, HIV seroprevalence and incidence, and HIV prevention

experiences of persons at highest risk for HIV infection.

The Centers for Disease Control and Prevention requests a three-year approval for a revised information collection. Data will be collected through anonymous, in-person interviews conducted with persons systematically selected from up to 14 cities throughout the United States; these MSAs were chosen based on having high HIV prevalence. A brief screening interview will be used to determine eligibility for participation in the behavioral assessment. Participants will be recruited through respondent-driven sampling, a scientifically proven recruitment strategy for reaching hidden, hard-to-reach, or stigmatized populations. Interview data will be recorded on secure portable computers, without internet connections. Data will be transferred to secure, encrypted data servers. Data will be stored at CDC and shared with local health departments in accordance with existing data use agreements and the Assurance of Confidentiality for HIV/AIDS Surveillance Data. Data will be disseminated in aggregate through academic and agency publications, presentations, and reports. All required data collection and activities will be anonymous.

Personally identifiable information (PII) is not included in the data collection. The CDC Privacy Officer has assessed this package for applicability of 5 U.S.C. 552a. The Privacy Act is not applicable because PII is not being collected under this CDC funded activity. The NHBS-Trans formative interview and optional HIV testing are anonymous (neither names nor Social Security numbers are collected). Data that will be collected through NHBS-Trans, while sensitive, are not personally identifying. The data from the behavioral assessment will provide estimates of (1) behavior related to the risk of HIV and other sexually transmitted diseases, (2) prior testing for HIV, and (3) use of HIV prevention services. All persons interviewed will also be offered an HIV test and will participate in a pre-test counseling session. No other federal agency systematically collects this type of information from persons at risk for HIV infection. These data have substantial impact on prevention program development and monitoring at the local, state, and national levels.

The burden table below shows the estimated annualized burden hours for the participants' time. Annually, 1,540 participants will complete an eligibility screener (an average of 5 minutes to complete), 1,400 participants will complete the Behavioral Assessment (an average of 40 minutes to complete), and 1,400 will complete the Recruiter Debriefing Form (an average of two minutes to complete). The total estimated annualized burden is 1,110 hours. Participation of respondents is voluntary. There are no costs to respondents other than their time.

ESTIMATED ANNUALIZED BURDEN HOURS

Type of respondents	Form name	Number of respondents	Number of responses per respondent	Average burden per response (in hours)	Total burden (in hours)
Persons Screened	Eligibility Screener	1,540	1	5/60	129
Eligible Participants	NHBS-Trans Interview	1,400	1	40/60	934
Peer Recruiters	Recruiter Debriefing	1,400	1	2/60	47
Total					1,110

Jeffrey M. Zirger,

Lead, Information Collection Review Office, Office of Scientific Integrity, Office of Science, Centers for Disease Control and Prevention.

[FR Doc. 2021–23872 Filed 11–1–21; 8:45 am]

BILLING CODE 4163–18–P

DEPARTMENT OF HEALTH AND HUMAN SERVICES

Health Resources and Services Administration

Charter Renewal for the National Advisory Committee on Rural Health and Human Services

AGENCY: Health Resources and Services Administration (HRSA), Department of Health and Human Services (HHS).

ACTION: Notice.

SUMMARY: In accordance with the Federal Advisory Committee Act of 1972, HHS is hereby giving notice that the National Advisory Committee on Rural Health and Human Services (NACRHHS) has been renewed. The effective date of the charter renewal is October 29, 2021.

FOR FURTHER INFORMATION CONTACT: Sahira Rafiullah, Designated Federal Officer, Federal Office of Rural Health Policy, HRSA, 5600 Fishers Lane, 17W59D, Rockville, Maryland 20857; 301–443–7095; or *SRafiullah@hrsa.gov.*

SUPPLEMENTARY INFORMATION: The NACRHHS provides advice and recommendations to the Secretary of HHS (Secretary) on policy, program development, and other matters of significance concerning the activities under Section 222 of the Public Health Service Act, as amended, 42 U.S.C. 217a. Each year, the NACRHHS selects one or more topics upon which to focus during the year. By the end of the calendar year, the Committee produces a report or white papers with recommendations on that issue for the Secretary.

The NACRHHS charter renewal filing date is October 29, 2021. Renewal of the NACRHHS charter gives authorization for the committee to operate until October 29, 2023.

A copy of the NACRHHS charter is available on the NACRHHS website at *https://www.hrsa.gov/advisory-committees/rural-health/.* A copy of the charter also can be obtained by accessing the FACA database that is maintained by the Committee Management Secretariat under the General Services Administration. The website address for the FACA database is *http://www.facadatabase.gov/.*

Maria G. Button,

Director, Executive Secretariat.

[FR Doc. 2021–23829 Filed 11–1–21; 8:45 am]

BILLING CODE 4165–15–P

DEPARTMENT OF HEALTH AND HUMAN SERVICES

National Institutes of Health

National Institute of Neurological Disorders and Stroke; Notice of Closed Meetings

Pursuant to section 10(d) of the Federal Advisory Committee Act, as

amended, notice is hereby given of the following meetings.

The meetings will be closed to the public in accordance with the provisions set forth in sections 552b(c)(4) and 552b(c)(6), Title 5 U.S.C., as amended. The grant applications and the discussions could disclose confidential trade secrets or commercial property such as patentable material, and personal information concerning individuals associated with the grant applications, the disclosure of which would constitute a clearly unwarranted invasion of personal privacy.

Name of Committee: National Institute of Neurological Disorders and Stroke Special Emphasis Panel; Clinical Trial Readiness for Rare Neurological and Neuromuscular Diseases.

Date: November 18, 2021.

Time: 2:00 p.m. to 4:00 p.m.

Agenda: To review and evaluate grant applications.

Place: National Institutes of Health, Neuroscience Center, 6001 Executive Boulevard, Rockville, MD 20852 (Virtual Meeting).

Contact Person: Ana Olariu, Ph.D., Scientific Review Officer, Scientific Review Branch, Division of Extramural Activities, NINDS/NIH NSC, 6001 Executive Blvd., Room 3208, MSC 9529, Bethesda, MD 20892, (301) 496–9223, *Ana.Olariu@nih.gov.*

Name of Committee: National Institute of Neurological Disorders and Stroke Special Emphasis Panel; HEAL Initiative: Planning Studies for Initial Analgesic Development Initial Translational Efforts [Small Molecules and Biologics] (R61 Clinical Trial Not Allowed).

Date: December 2, 2021.

Time: 12:30 p.m. to 4:30 p.m.

Agenda: To review and evaluate grant applications.

Place: National Institutes of Health, Neuroscience Center, 6001 Executive Boulevard, Rockville, MD 20852 (Virtual Meeting).

Contact Person: Bo-Shiun Chen, Ph.D., Scientific Review Officer, Scientific Review Branch, Division of Extramural Activities, NINDS/NIH NSC, 6001 Executive Blvd., Suite 3208, MSC 9529, Bethesda, MD 20892, (301) 496–9223, *bo-shiun.chen@nih.gov.*

(Catalogue of Federal Domestic Assistance Program Nos. 93.853, Clinical Research Related to Neurological Disorders; 93.854, Biological Basis Research in the Neurosciences, National Institutes of Health, HHS)

Dated: October 28, 2021.

Tyeshia M. Roberson-Curtis,

Program Analyst, Office of Federal Advisory Committee Policy.

[FR Doc. 2021–23846 Filed 11–1–21; 8:45 am]

BILLING CODE 4140–01–P

DEPARTMENT OF HEALTH AND HUMAN SERVICES

National Institutes of Health

Center for Scientific Review; Notice of Closed Meeting

Pursuant to section 10(d) of the Federal Advisory Committee Act, as amended, notice is hereby given of the following meeting.

The meeting will be closed to the public in accordance with the provisions set forth in sections 552b(c)(4) and 552b(c)(6), Title 5 U.S.C., as amended. The grant applications and the discussions could disclose confidential trade secrets or commercial property such as patentable material, and personal information concerning individuals associated with the grant applications, the disclosure of which would constitute a clearly unwarranted invasion of personal privacy.

Name of Committee: Center for Scientific Review Special Emphasis Panel; Fellowships: Chemistry, Biochemistry and Biophysics.

Date: December 1–2, 2021.

Time: 10:00 a.m. to 8:00 p.m.

Agenda: To review and evaluate grant applications.

Place: National Institutes of Health, Rockledge II, 6701 Rockledge Drive, Bethesda, MD 20892 (Virtual Meeting).

Contact Person: Ian Frederick Thorpe, Ph.D., Scientific Review Officer, Center for Scientific Review, National Institutes of Health, 6701 Rockledge Drive, Bethesda, MD 20892, (301) 480–8662, *ian.thorpe@nih.gov.*

(Catalogue of Federal Domestic Assistance Program Nos. 93.306, Comparative Medicine; 93.333, Clinical Research, 93.306, 93.333, 93.337, 93.393–93.396, 93.837–93.844, 93.846–93.878, 93.892, 93.893, National Institutes of Health, HHS)

Dated: October 27, 2021.

Miguelina Perez,

Program Analyst, Office of Federal Advisory Committee Policy.

[FR Doc. 2021–23795 Filed 11–1–21; 8:45 am]

BILLING CODE 4140–01–P

DEPARTMENT OF HEALTH AND HUMAN SERVICES

National Institutes of Health

Eunice Kennedy Shriver National Institute of Child Health and Human Development; Notice of Closed Meeting

Pursuant to section 10(d) of the Federal Advisory Committee Act, as amended, notice is hereby given of the following meeting.

The meeting will be closed to the public in accordance with the provisions set forth in sections 552b(c)(4) and 552b(c)(6), Title 5 U.S.C., as amended. The grant applications and the discussions could disclose confidential trade secrets or commercial property such as patentable material, and personal information concerning individuals associated with the grant applications, the disclosure of which would constitute a clearly unwarranted invasion of personal privacy.

Name of Committee: National Institute of Child Health and Human Development Special Emphasis Panel; Coordinating Center for the NICHD Population Dynamics Centers Research Infrastructure Program FY 2022 (R24 Clinical Trial Not Allowed).

Date: November 4, 2021.

Time: 10:00 a.m. to 5:00 p.m.

Agenda: To review and evaluate grant applications.

Place: Eunice Kennedy Shriver National Institute of Child Health and Human Development, National Institutes of Health, 6710B Rockledge Drive, Room 2121B, Bethesda, MD 20892 (Video Assisted Meeting).

Contact Person: Christiane M. Robbins, Scientific Review Officer, Scientific Review Branch, Eunice Kennedy Shriver National Institute of Child Health and Human Development, National Institutes of Health, 6710B Rockledge Drive, Room 2121B, Bethesda, MD 20892, (301) 451–4989, *crobbins@mail.nih.gov.*

This notice is being published less than 15 days prior to the meeting due to scheduling conflicts.

(Catalogue of Federal Domestic Assistance Program Nos. 93.864, Population Research, National Institutes of Health, HHS)

Dated: October 28, 2021.

Melanie J. Pantoja,

Program Analyst, Office of Federal Advisory Committee Policy.

[FR Doc. 2021–23849 Filed 11–1–21; 8:45 am]

BILLING CODE 4140–01–P

DEPARTMENT OF HOMELAND SECURITY

Federal Emergency Management Agency

[Docket ID: FEMA–2021–0019; OMB No. 1660–0068]

Agency Information Collection Activities: Submission for OMB Review; Comment Request; Federal Hotel and Motel Fire Safety Declaration Form

AGENCY: Federal Emergency Management Agency, Department of Homeland Security.

ACTION: 30-Day notice of renewal and request for comments.

SUMMARY: The Federal Emergency Management Agency (FEMA) will

submit the information collection abstracted below to the Office of Management and Budget for review and clearance in accordance with the requirements of the Paperwork Reduction Act of 1995. FEMA, as part of its continuing effort to reduce paperwork and respondent burden, invites the general public to take this opportunity to comment on an extension without change of a currently approved information collection. This notice seeks comments concerning a list of hotels, motels, and similar places of public accommodations meeting minimum fire-safety requirements. The information collected is voluntary and if approved for listing, the lodging establishment may be used by Federal employees on government related travel and for Federal agency conferences. As the list is open to use by the public, non-government travelers may use the list to identify lodging meeting minimum life-safety criteria from fire.

DATES: Comments must be submitted on or before December 2, 2021.

ADDRESSES: Written comments and recommendations for the proposed information collection should be sent within 30 days of publication of this notice to *www.reginfo.gov/public/do/PRAMain.* Find this particular information collection by selecting ''Currently under 30-day Review—Open for Public Comments'' or by using the search function.

FOR FURTHER INFORMATION CONTACT: Requests for additional information or copies of the information collection should be made to Director, Information Management Division, 500 C Street SW, Washington, DC 20472, email address *FEMA-Information-Collections-Management@fema.dhs.gov* or Teressa Kaas, Fire Program Specialist in FEMA's U.S. Fire Administration at *Teressa.Kaas@fema.dhs.gov* or 301–447–1263.

SUPPLEMENTARY INFORMATION: The Hotel and Motel Fire Safety Act of 1990 (Pub. L. 101–391) requires FEMA to establish and maintain a list of hotels, motels, and similar places of public accommodation meeting minimum requirements for protection of life from fire. This list is known as the National Master List (NML). This law resulted from a series of deadly fires in hotels and motels, occurring in the late 70's and 80's, with high loss of life. The legislative intent of this public law is to provide all travelers the assurance of fire-safety in accommodations identified on the NML. The Act further stipulates that Federal employees on official travel stay in properties approved by the authority having jurisdiction and listed on the current NML. For statutory reference see 15 U.S.C. 2224–26.

This proposed information collection previously published in the **Federal Register** on July 22, 2021, at 86 FR 38733 with a 60-day public comment period. No comments were received. The purpose of this notice is to notify the public that FEMA will submit the information collection abstracted below to the Office of Management and Budget for review and clearance.

Collection of Information

Title: Federal Hotel and Motel Fire Safety Declaration Form.

Type of information collection: Extension, without change, of a currently approved information collection.

OMB Number: 1660–0068.

Form Titles and Numbers: FEMA Form FF–USFA–FY–21–112 (formerly 516–0–1), Federal Hotel and Motel Fire Safety Declaration Form.

Abstract: FEMA Form FF–USFA–FY–21–112 (formerly 516–0–1) collects basic information on life-safety systems related directly to fire-safety in hotels, motels, and similar places of accommodations applying for inclusion on the National Master List in compliance with the Hotel and Motel Fire Safety Act of 1990 (Pub. L. 101–391). Information is published in the National Master List and is publicly available.

Affected Public: Business or other for-profit; State, Local or Tribal Government.

Estimated Number of Respondents: 2,532.

Estimated Number of Responses: 3,141.

Estimated Total Annual Burden Hours: 836 hours.

Estimated Total Annual Respondent Cost: $38,846.

Estimated Respondents' Operation and Maintenance Costs: $0.

Estimated Respondents' Capital and Start-Up Costs: $0.

Estimated Total Annual Cost to the Federal Government: $89,668.

Comments

Comments may be submitted as indicated in the **ADDRESSES** caption above. Comments are solicited to (a) evaluate whether the proposed data collection is necessary for the proper performance of the agency, including whether the information shall have practical utility; (b) evaluate the accuracy of the agency's estimate of the burden of the proposed collection of information, including the validity of the methodology and assumptions used; (c) enhance the quality, utility, and clarity of the information to be collected; and (d) minimize the burden of the collection of information on those who are to respond, including through the use of appropriate automated, electronic, mechanical, or other technological collection techniques or other forms of information technology, *e.g.,* permitting electronic submission of responses.

Millicent L. Brown,

Acting Branch Chief, Records Management Branch, Office of the Chief Administrative Officer, Mission Support, Federal Emergency Management Agency, Department of Homeland Security.

[FR Doc. 2021–23875 Filed 11–1–21; 8:45 am]

BILLING CODE 9111–76–P

INTER-AMERICAN FOUNDATION

Sunshine Act Meetings

TIME AND DATE: November 9, 2021, 9:30 a.m.–12:30 p.m.

PLACE: Via tele-conference.

STATUS: Annual Meeting of the IAF Board of Directors with the Advisory Council, open to the public.

MATTERS TO BE CONSIDERED:

- Call to Order and Welcome from the Board Chair
- FY21 Highlights
- Management Report
- New Business
- Adjournment

CONTACT PERSON FOR MORE INFORMATION: Aswathi Zachariah, General Counsel, (202) 683–7118.

For Dial-in Information Contact: Karen Vargas, board liaison, (202) 524–8869.

The Inter-American Foundation is holding this meeting under the Government in the Sunshine Act, 5 U.S.C. 552(b).

Aswathi Zachariah,

General Counsel.

[FR Doc. 2021–23947 Filed 10–29–21; 11:15 am]

BILLING CODE 7025–01–P

DEPARTMENT OF THE INTERIOR

National Park Service

[NPS–WASO–NRNHL–DTS#–32953; PPWOCRADI0, PCU00RP14.R50000]

National Register of Historic Places; Notification of Pending Nominations and Related Actions

AGENCY: National Park Service, Interior.

ACTION: Notice.

SUMMARY: The National Park Service is soliciting electronic comments on the

significance of properties nominated before October 23, 2021, for listing or related actions in the National Register of Historic Places.

DATES: Comments should be submitted electronically by November 17, 2021.

ADDRESSES: Comments are encouraged to be submitted electronically to *National_Register_Submissions@nps.gov* with the subject line ''Public Comment on <property or proposed district name, (County) State>.'' If you have no access to email you may send them via U.S. Postal Service and all other carriers to the National Register of Historic Places, National Park Service, 1849 C Street NW, MS 7228, Washington, DC 20240.

FOR FURTHER INFORMATION CONTACT: Sherry A. Frear, Chief, National Register of Historic Places/National Historic Landmarks Program, 1849 C Street NW, MS 7228, Washington, DC 20240, *sherry_frear@nps.gov,* 202–913–3763.

SUPPLEMENTARY INFORMATION: The properties listed in this notice are being considered for listing or related actions in the National Register of Historic Places. Nominations for their consideration were received by the National Park Service before October 23, 2021. Pursuant to Section 60.13 of 36 CFR part 60, comments are being accepted concerning the significance of the nominated properties under the National Register criteria for evaluation.

Before including your address, phone number, email address, or other personal identifying information in your comment, you should be aware that your entire comment—including your personal identifying information—may be made publicly available at any time. While you can ask us in your comment to withhold your personal identifying information from public review, we cannot guarantee that we will be able to do so.

Nominations submitted by State or Tribal Historic Preservation Officers:

ALABAMA

Baldwin County

Twelvemile Island Ship Graveyard Historical and Archaeological District, Address Restricted, Mobile vicinity, SG100007203

Houston County

Moody Hospital, 311 North Alice St., Dothan, SG100007191

Jefferson County

Norwood Historic District (Boundary Increase), Generally bounded by Carraway Blvd., 19th Ave. North, Norwood Blvd., 17th Ave. North, Vanderbilt Rd., and I 20/59, Birmingham, BC100007201

Mobile County

Twelvemile Island Ship Graveyard Historical and Archaeological District, Address Restricted, Mobile vicinity, SG100007203

Russell County

Phenix City Post Office Building, 500 14th St., Phenix City, SG100007192

COLORADO

Montrose County

Fetz-Keller Ranch Headquarters (Boundary Increase), 61789 CO 90, Montrose vicinity, BC100007204

MICHIGAN

Berrien County

Whitcomb Hotel, 509 Ship St., Saint Joseph, SG100007206

Kalamazoo County

State Theatre
(Kalamazoo MRA), 404 S. Burdick St., Kalamazoo, 83004623

Wayne County

Malcolm X House, 4336 Williams St., Inkster, SG100007205

MONTANA

Jefferson County

Hall Bungalow, 500 Lower Valley Rd., Boulder vicinity, SG100007197

NEBRASKA

Douglas County

Douglas County Courthouse (Boundary Increase), 1701 Farnam St., Omaha, BC100007195

OHIO

Summit County

Akron Beacon Journal Building, 44 East Exchange St., Akron, SG100007190

PENNSYLVANIA

York County

Merchants Cigar Box Company, 100 East Broad St., Dallastown, SG100007193

TEXAS

Travis County

Third Street Railroad Trestle, West end of 3rd St. at Shoal Cr., Austin, SG100007202

Additional documentation has been received for the following resources:

ALABAMA

Jefferson County

Norwood Historic District (Additional Documentation), Generally bounded by Carraway Blvd., 19th Ave. North, Norwood Blvd., 17th Ave. North, Vanderbilt Rd., and I 20/59, Birmingham, AD01001166

NEBRASKA

Douglas County

Douglas County Courthouse (Additional Documentation), 1701 Farnam St., Omaha, AD79003683

WISCONSIN

Racine County

Old Main Street Historic District (Additional Documentation), Generally Main between State and 5th Sts., Racine, AD87000491

Nominations submitted by Federal Preservation Officer:

The State Historic Preservation Officer reviewed the following nominations and responded to the Federal Preservation Officer within 45 days of receipt of the nomination and supports listing the properties in the National Register of Historic Places.

CALIFORNIA

Santa Barbara County

Santa Cruz Island Archeological District (Boundary Increase), Address Restricted, Santa Barbara vicinity, BC100007199

Santa Cruz Island Archeological District (Additional Documentation), Address Restricted, Santa Barbara vicinity, AD80000405

Authority: Section 60.13 of 36 CFR part 60.

Dated: October 26, 2021.

Sherry A. Frear,

Chief, National Register of Historic Places/National Historic Landmarks Program.

[FR Doc. 2021–23881 Filed 11–1–21; 8:45 am]

BILLING CODE 4312–52–P

INTERNATIONAL TRADE COMMISSION

[Investigation No. 337–TA–1284]

Certain Electronic Devices Having Wireless Communication Capabilities and Components Thereof; Institution of Investigation

AGENCY: U.S. International Trade Commission.

ACTION: Notice.

SUMMARY: Notice is hereby given that a complaint was filed with the U.S. International Trade Commission on September 27, 2021, under section 337 of the Tariff Act of 1930, as amended, on behalf of Bell Northern Research, LLC of Chicago, Illinois. A supplement was filed on October 15, 2021. The complaint alleges violations of section 337 based upon the importation into the United States, the sale for importation, and the sale within the United States after importation of certain electronic devices having wireless communication capabilities and components thereof by reason of infringement of certain claims of U.S. Patent No. 8,204,554 (''the '554 patent''); U.S. Patent No. 7,319,889 (''the '889 patent''); U.S. Patent No. RE 48,629 (''the '629 patent''); and U.S. Patent No.

8,416,862 (''the '862 patent''). The complaint further alleges that an industry in the United States exists as required by the applicable Federal Statute.

The complainant requests that the Commission institute an investigation and, after the investigation, issue a limited exclusion order and cease and desist orders.

ADDRESSES: The complaint, except for any confidential information contained therein, may be viewed on the Commission's electronic docket (EDIS) at *https://edis.usitc.gov.* For help accessing EDIS, please email *EDIS3Help@usitc.gov.* Hearing impaired individuals are advised that information on this matter can be obtained by contacting the Commission's TDD terminal on (202) 205–1810. Persons with mobility impairments who will need special assistance in gaining access to the Commission should contact the Office of the Secretary at (202) 205–2000. General information concerning the Commission may also be obtained by accessing its internet server at *https://www.usitc.gov.*

FOR FURTHER INFORMATION CONTACT: Pathenia M. Proctor, The Office of Unfair Import Investigations, U.S. International Trade Commission, telephone (202) 205–2560.

SUPPLEMENTARY INFORMATION:

Authority: The authority for institution of this investigation is contained in section 337 of the Tariff Act of 1930, as amended, 19 U.S.C. 1337, and in section 210.10 of the Commission's Rules of Practice and Procedure, 19 CFR 210.10 (2020).

Scope of Investigation: Having considered the complaint, the U.S. International Trade Commission, on October 26, 2021, *ordered that*—

(1) Pursuant to subsection (b) of section 337 of the Tariff Act of 1930, as amended, an investigation be instituted to determine whether there is a violation of subsection (a)(1)(B) of section 337 in the importation into the United States, the sale for importation, or the sale within the United States after importation of certain products identified in paragraph (2) by reason of infringement of one or more of claims 1, 2, 4–9, and 11–14 of the '554 patent; claims 1, 2, 4–6, 8, 9, 11, and 12 of the '889 patent; claims 1, 8–11, 13, 14, 19, 20, and 27 of the '629 patent; and claims 1–4 and 9–12 of the '862 patent, and whether an industry in the United States exists as required by subsection (a)(2) of section 337;

(2) Pursuant to section 210.10(b)(1) of the Commission's Rules of Practice and Procedure, 19 CFR 210.10(b)(1), the plain language description of the accused products or category of accused products, which defines the scope of the investigation, is ''mobile devices (specifically, mobile telephones and tablet computers), personal computers, and televisions having wireless communication capabilities, and components thereof'';

(3) Pursuant to Commission Rule 210.50(b)(l), 19 CFR 210.50(b)(1), the presiding administrative law judge shall take evidence or other information and hear arguments from the parties or other interested persons with respect to the public interest in this investigation, as appropriate, and provide the Commission with findings of fact and a recommended determination on this issue, which shall be limited to the statutory public interest factors set forth in 19 U.S.C. l337(d)(l), (f)(1), (g)(1);

(4) For the purpose of the investigation so instituted, the following are hereby named as parties upon which this notice of investigation shall be served:

(a) The complainant is:

Bell Northern Research, LLC, 401 North Michigan Avenue, Chicago, Illinois 60611

(b) The respondents are the following entities alleged to be in violation of section 337, and are the parties upon which the complaint is to be served:

Lenovo Group Ltd., No. 6 Chuang Ye Road, Shangdi Information Industry Base, Haidan District 100085, China

Lenovo (United States), Inc., 1009 Think Pl., Morrisville, NC 27560

Motorola Mobility LLC, 222 W. Merchandise Mart Plaza, Suite 1800, Chicago, IL 60654

TCL Electronics Holdings Limited, 7/F, TCL Building, 22 Science Park East Avenue, 22E, Hong Kong Science Park, Hong Kong

TCT Mobile (US) Inc., 25 Edelman, Suite 200, Irvine, California 92618

TTE Technology, Inc., 1860 Compton Avenue, Corona, CA 92881

BLU Products, Inc., 10814 NW 33rd St., Building 100, Doral, Florida 33172

BBK Electronics Corp., 23 Bubugao Avenue, Wusha Village, Chang'an District, Dongguan, Guangdong, 523860, China

OnePlus Technology Co., Ltd., 18F, Block C, Shenye Tairan Bldg., Tairan Eighth Road, Chegongmiao, Futian District, Shenzhen, Guangdong, 518048, China

HMD Global Oy, Bertel Jungin aukio 9, Espoo 02600, Finland

HMD America, Inc., 1200 Brickell Ave., Suite 510, Miami, Florida 33131

Sonim Technologies, Inc., 6500 River Place Blvd., Building 7, Suite 250, Austin, Texas 78730

(c) The Office of Unfair Import Investigations, U.S. International Trade Commission, 500 E Street SW, Suite 401, Washington, DC 20436; and

(5) For the investigation so instituted, the Chief Administrative Law Judge, U.S. International Trade Commission, shall designate the presiding Administrative Law Judge.

Responses to the complaint and the notice of investigation must be submitted by the named respondents in accordance with section 210.13 of the Commission's Rules of Practice and Procedure, 19 CFR 210.13. Pursuant to 19 CFR 201.16(e) and 210.13(a), as amended in 85 FR 15798 (March 19, 2020), such responses will be considered by the Commission if received not later than 20 days after the date of service by the complainant of the complaint and the notice of investigation. Extensions of time for submitting responses to the complaint and the notice of investigation will not be granted unless good cause therefor is shown.

Failure of a respondent to file a timely response to each allegation in the complaint and in this notice may be deemed to constitute a waiver of the right to appear and contest the allegations of the complaint and this notice, and to authorize the administrative law judge and the Commission, without further notice to the respondent, to find the facts to be as alleged in the complaint and this notice and to enter an initial determination and a final determination containing such findings, and may result in the issuance of an exclusion order or a cease and desist order or both directed against the respondent.

By order of the Commission.

Issued: October 27, 2021.

Lisa Barton,

Secretary to the Commission.

[FR Doc. 2021–23823 Filed 11–1–21; 8:45 am]

BILLING CODE 7020–02–P

INTERNATIONAL TRADE COMMISSION

[Investigation No. 337–TA–1283]

Certain Composite Baseball and Softball Bats and Components Thereof Institution of Investigation

AGENCY: U.S. International Trade Commission.

ACTION: Notice.

SUMMARY: Notice is hereby given that a complaint was filed with the U.S. International Trade Commission on September 27, 2021, under section 337

of the Tariff Act of 1930, as amended, on behalf of Easton Diamond Sports, LLC of Thousand Oaks, California. Supplements to the complaint were filed on October 13 and October 18, 2021. The complaint, as supplemented, alleges violations of section 337 based upon the importation into the United States, the sale for importation, and the sale within the United States after importation of certain composite baseball and softball bats and components thereof by reason of infringement of certain claims of U.S. Patent No. 6,997,826 (''the '826 Patent''). The complaint further alleges that an industry in the United States exists as required by the applicable Federal Statute.

The complainant requests that the Commission institute an investigation and, after the investigation, issue a limited exclusion order and cease and desist orders.

ADDRESSES: The complaint, except for any confidential information contained therein, may be viewed on the Commission's electronic docket (EDIS) at *https://edis.usitc.gov*. For help accessing EDIS, please email *EDIS3Help@usitc.gov*. Hearing impaired individuals are advised that information on this matter can be obtained by contacting the Commission's TDD terminal on (202) 205–1810. Persons with mobility impairments who will need special assistance in gaining access to the Commission should contact the Office of the Secretary at (202) 205–2000. General information concerning the Commission may also be obtained by accessing its internet server at *https://www.usitc.gov*.

FOR FURTHER INFORMATION CONTACT: Katherine Hiner, Office of Docket Services, U.S. International Trade Commission, telephone (202) 205–1802.

SUPPLEMENTARY INFORMATION:

Authority: The authority for institution of this investigation is contained in section 337 of the Tariff Act of 1930, as amended, 19 U.S.C. 1337, and in section 210.10 of the Commission's Rules of Practice and Procedure, 19 CFR 210.10 (2020).

Scope of Investigation: Having considered the complaint, the U.S. International Trade Commission, on October 26, 2021, *ordered that*—

(1) Pursuant to subsection (b) of section 337 of the Tariff Act of 1930, as amended, an investigation be instituted to determine whether there is a violation of subsection (a)(1)(B) of section 337 in the importation into the United States, the sale for importation, or the sale within the United States after importation of certain products identified in paragraph (2) by reason of infringement of one or more of claims 1–5, 9–12, 14–15, and 18–19 of the '826 Patent, and whether an industry in the United States exists as required by subsection (a)(2) of section 337;

(2) Pursuant to section 210.10(b)(1) of the Commission's Rules of Practice and Procedure, 19 CFR 210.10(b)(1), the plain language description of the accused products or category of accused products, which defines the scope of the investigation, is ''composite baseball and softball bats having a barrel formed by more than one cylindrical layer of material'';

(3) For the purpose of the investigation so instituted, the following are hereby named as parties upon which this notice of investigation shall be served:

(a) The complainant is:

Easton Diamond Sports, LLC, 3500 Willow Lane, Thousand Oaks, CA 91361

(b) The respondents are the following entities alleged to be in violation of section 337, and are the parties upon which the complaint is to be served:

Juno Athletics LLC, 1000 Williams Boulevard, Unit 2703, Aventura, FL 33160

Monsta Athletics LLC, 1090 5th Street, Suite 115, Calimesa, CA 92320

Proton Sports Inc., 7904 East Chaparral Road, Suite A110, Scottsdale, AZ 85250

(4) For the investigation so instituted, the Chief Administrative Law Judge, U.S. International Trade Commission, shall designate the presiding Administrative Law Judge.

The Office of Unfair Import Investigations will not participate as a party to this investigation.

Responses to the complaint and the notice of investigation must be submitted by the named respondents in accordance with section 210.13 of the Commission's Rules of Practice and Procedure, 19 CFR 210.13. Pursuant to 19 CFR 201.16(e) and 210.13(a), as amended in 85 FR 15798 (March 19, 2020), such responses will be considered by the Commission if received not later than 20 days after the date of service by the complainant of the complaint and the notice of investigation. Extensions of time for submitting responses to the complaint and the notice of investigation will not be granted unless good cause therefor is shown.

Failure of a respondent to file a timely response to each allegation in the complaint and in this notice may be deemed to constitute a waiver of the right to appear and contest the allegations of the complaint and this notice, and to authorize the administrative law judge and the Commission, without further notice to the respondent, to find the facts to be as alleged in the complaint and this notice and to enter an initial determination and a final determination containing such findings, and may result in the issuance of an exclusion order or a cease and desist order or both directed against the respondent.

By order of the Commission.

Issued: October 27, 2021.

Lisa Barton,

Secretary to the Commission.

[FR Doc. 2021–23824 Filed 11–1–21; 8:45 am]

BILLING CODE 7020–02–P

INTERNATIONAL TRADE COMMISSION

[Investigation No. 337–TA–1145 (Remand)]

Certain Botulinum Toxin Products, Processes for Manufacturing or Relating to Same and Certain Products Containing Same; Notice of Commission Decision To Vacate Its Final Determination on Remand

AGENCY: U.S. International Trade Commission.

ACTION: Notice.

SUMMARY: Notice is hereby given that the U.S. International Trade Commission has vacated its final determination following dismissal of the appeals to the U.S. Court of Appeals for the Federal Circuit (''Federal Circuit'') challenging various aspects of that determination.

FOR FURTHER INFORMATION CONTACT: Houda Morad, Office of the General Counsel, U.S. International Trade Commission, 500 E Street SW, Washington, DC 20436, telephone (202) 708–4716. Copies of non-confidential documents filed in connection with this investigation may be viewed on the Commission's electronic docket (EDIS) at *https://edis.usitc.gov.* For help accessing EDIS, please email *EDIS3Help@usitc.gov.* General information concerning the Commission may also be obtained by accessing its internet server at *https://www.usitc.gov.* Hearing-impaired persons are advised that information on this matter can be obtained by contacting the Commission's TDD terminal on (202) 205–1810.

SUPPLEMENTARY INFORMATION: On March 6, 2019, the Commission instituted this investigation under section 337 of the Tariff Act of 1930, as amended, 19

U.S.C. 1337 (''section 337''), based on a complaint filed by Medytox Inc. of Seoul, South Korea (''Medytox''); Allergan plc of Dublin, Ireland; and Allergan, Inc. of Irvine, California (collectively, ''Allergan'') (all collectively, ''Complainants''). *See* 84 FR 8112–13 (Mar. 6, 2019). The complaint, as supplemented, alleges a violation of section 337 based upon the importation and the sale in the United States of certain botulinum toxin products, processes for manufacturing or relating to same and certain products containing same by reason of misappropriation of trade secrets, the threat or effect of which is to destroy or substantially injure an industry in the United States. *See id.* The notice of investigation names as respondents Daewoong Pharmaceuticals Co., Ltd. (''Daewoong'') of Seoul, South Korea and Evolus, Inc. (''Evolus'') of Irvine, California (collectively, ''Respondents''). *See id.* The Office of Unfair Import Investigations (''OUII'') was also a party to the investigation. *See id.*

On December 16, 2020, the Commission found a violation of section 337 based on the misappropriation of Complainants' trade secrets (including the Medytox manufacturing processes but not the Medytox bacterial strain). *See* 85 FR 83610–11 (Dec. 22, 2020). The Commission issued a limited exclusion order against certain botulinum neurotoxin (''BTX'') products that are imported and/or sold by Respondents Daewoong and Evolus and a cease and desist order against Evolus (collectively, ''the remedial orders''). *Id.* The Commission also set a bond during the period of Presidential review in an amount of $441 per 100U vial of Respondents' accused products. *Id.*

On February 12, 2021, Complainants filed an appeal from the Commission's final determination with the Federal Circuit (Appeal No. 21–1653). On the same day, Respondents also filed an appeal from the Commission's final determination of a violation of section 337 (Appeal No. 21–1654). On February 18, 2021, Complainants and Evolus (collectively, ''the Settling Parties'') announced that they had reached a settlement to resolve all pending issues between them.

On March 3, 2021, the Settling Parties filed a joint petition to rescind the remedial orders based on settlement agreements and other confidential agreements between and among several of the Settling Parties. On April 5, 2021, Daewoong filed a response to the Settling Parties' petition not opposing recission of the remedial orders and also including a motion for vacatur of the Commission's final determination. On April 8, 2021, OUII filed a response in support of the joint petition to rescind. On April 15, 2021, Medytox filed a response in opposition to Daewoong's motion to vacate the final determination.

On May 3, 2021, the Commission determined to rescind the remedial orders. *See* 86 FR 24665–66 (May 7, 2021). The Commission also issued an indicative ruling that, if the Federal Circuit dismisses the pending appeals as moot, the Commission will vacate its final determination. *See id.* The Commission explained that ''if the Federal Circuit finds that the . . . appeals are moot'' and ''[i]f appellate review for Daewoong is prevented, it would be plainly through happenstance, and vacatur would be warranted to prevent any preclusive effect of the final determination against Daewoong.'' *See* Comm'n Op. at 8 (May 3, 2021).

On June 21, 2021, Medytox also reached a settlement agreement with AEON Biopharma (''AEON''). AEON is Daewoong's exclusive licensee in the United States for therapeutic applications of BTX products, while Evolus is the exclusive licensee for aesthetic applications. Consequently, as Medytox stated before the Federal Circuit, ''the result of the two settlements is that Medytox has now resolved its disputes with and granted licenses to the two companies that hold the exclusive rights to distribute Daewoong's BTX products in the United States.'' *See* ECF 69, Medytox Statement of Non-Opposition at 2 (Fed. Cir. Docket No. 21–1653); ECF 68, Medytox Letter at 1 (Fed. Cir. Docket No. 21–1653). Thus, Medytox did not oppose the Commission's and Daewoong's motions to dismiss the appeals as moot and no longer opposes vacatur of the Commission's final determination upon remand. On July 26, 2021, the Federal Circuit issued an order dismissing the appeals ''to the extent that the appeals are deemed moot'' and remanding ''the matter . . . for the Commission to address vacatur of its final determination.'' *Medytox* v. *ITC,* No. 21–1653, Order at 2 (Fed. Cir. July 26, 2021).

In accordance with the Commission's May 3, 2021 indicative ruling of vacatur and the Commission's reasoning related thereto, and in view of the Federal Circuit's dismissal of the related appeals as moot, the Commission hereby vacates on remand its final determination. Commissioner Karpel does not join the Commission's decision to vacate. As she has previously stated, the Commission's decision to exercise its discretion to grant the extraordinary remedy of vacatur requires an analysis, based on a complete record and after having heard from all parties on the issue, that includes a careful balancing of the equities, including with respect to the public interest. *See* Comm'n Op. at 9–10 n.15 (May 3, 2021). Commissioner Karpel does not consider that such an analysis was done when the Commission issued its indicative ruling regarding vacatur, *see id.,* or on remand.

The Commission's vote on this determination took place on October 28, 2021.

The authority for the Commission's determination is contained in section 337 of the Tariff Act of 1930, as amended (19 U.S.C. 1337), and in part 210 of the Commission's Rules of Practice and Procedure (19 CFR part 210).

By order of the Commission.

Issued: October 28, 2021.

Lisa Barton,

Secretary to the Commission.

[FR Doc. 2021–23866 Filed 11–1–21; 8:45 am]

BILLING CODE 7020–02–P

DEPARTMENT OF JUSTICE

[OMB Number 1110–0058]

Agency Information Collection Activities; Proposed eCollection eComments Requested; Extension of an Approved Collection; National Incident-Based Reporting System (NIBRS)

AGENCY: Federal Bureau of Investigation (FBI), Department of Justice (DOJ).

ACTION: 60-Day notice and request for comments.

SUMMARY: The Criminal Justice Information Services (CJIS) Division, FBI, DOJ, will be submitting the following information collection request to the Office of Management and Budget for review and approval in accordance with the Paperwork Reduction Act (PRA) of 1995.

DATES: Comments are encouraged and will be accepted for 60 days until January 3, 2022.

FOR FURTHER INFORMATION CONTACT: All comments, suggestions, or questions regarding additional information, to include obtaining a copy of the proposed information collection instrument with instructions, should be directed to the Crime and Law Enforcement Statistics (formerly the Crime Statistics Management) Unit Chief, Amy C. Blasher, FBI, CJIS Division, Module D–1 1000 Custer Hollow Road, Clarksburg, West Virginia, 26306.

SUPPLEMENTARY INFORMATION: Written comments and suggestions from the public and affected agencies concerning the proposed collection of information are encouraged. Your comments should address one or more of the following four points:

—Evaluate whether the proposed collection of information is necessary for the proper performance of the functions of the FBI, including whether the information will have practical utility;
—Evaluate the accuracy of the agency's estimate of the burden of the proposed collection of information, including the validity of the methodology and assumptions used;
—Evaluate whether, and if so, how the quality, utility, and clarity of the information to be collected can be enhanced; and
—Minimize the burden of the collection of information on those who are to respond, including through the use of appropriate automated, electronic, mechanical, or other technological collection techniques or other forms of information technology (*e.g.,* permitting electronic submission of responses).

Overview of This Information Collection

1. *Type of Information Collection:* Revision of an approved collection

2. *The Title of the Form/Collection:* National Incident-Based Reporting System

3. *The agency form number, if any, and the applicable component of the Department sponsoring the collection:* The form number is 1110–0058. The applicable component within the DOJ is the CJIS Division in the FBI.

4. *Affected public who will be asked or required to respond, as well as a brief abstract:*

Primary: Federal, state, local, and tribal law enforcement agencies (LEAs).

Abstract: Under Title 28, United States Code, section (§) 534(a) and (c); the USA Patriot Improvement and Reauthorization Act of 2005, Public Law 109–177 (March 9, 2006) H.R. 3199: Section 307 (e) Reporting of Cargo Theft; the William Wilberforce Trafficking Victims Protection Reauthorization Act of 2008; and the Matthew Shepard and James Byrd, Jr., Hate Crimes Prevention Act (2009), § 4708, this collection requests incident data from federal, state, local, and tribal LEAs in order for the FBI Uniform Crime Reporting (UCR) Program to serve as the national clearinghouse for the collection and dissemination of incident data and to release these statistics in the following publications: *Crime in the United States, Hate Crime Statistics, Law Enforcement Officers Killed and Assaulted,* and *National Incident-Based Reporting System.* The NIBRS is a data collection which allows LEAs to collect information on each crime occurrence. The FBI designed NIBRS to generate data as a byproduct of federal, state, and local automated records management systems (RMS). The NIBRS collects data on each incident and arrest within 28 crime categories comprised of 71 specific crimes called Group A offenses. For each of the offenses coming to the attention of law enforcement, various facts about the crime are collected. In addition to the Group A offenses, arrest data only are reported for 13 Group B offense categories. When reporting data via the traditional Summary Reporting System (SRS), LEAs tally the occurrences of eight Part I crimes.

The most significant difference between NIBRS and the traditional SRS is the degree of detail in reporting. The NIBRS is capable of producing more detailed, accurate, and meaningful information because data are collected about when and where crime takes place, what form it takes, and the characteristics of its victims and perpetrators. Although most of the general concepts for collecting, scoring, and reporting UCR data in SRS apply in NIBRS (*e.g.,* jurisdictional rules), there are some important differences between the two data collection systems. The SRS employs the Hierarchy Rule, *i.e.,* in a multiple-offense incident, only the most serious offense is reported, and only eight Part I offenses can be reported. The many advantages NIBRS has over SRS include, but are not limited to, reports every offense occurring during the incident; revised, expanded, and new offense definitions; more specificity in reporting and using offense and arrest data for 28 Group A offense categories encompassing 71 crimes; distinguishes between attempted and completed Group A crimes; provides crimes against society; includes victim-to-offender data, circumstance, drug-related offenses, offenders suspected use of drugs, and expanded computer crime; and provides updated reports tied directly to the original incident. The Group A offense categories include animal cruelty; arson; assault offenses; bribery; burglary/breaking and entering; commerce violations;* counterfeiting/forgery; destruction/damage/vandalism of property; drug/narcotic offenses; embezzlement; espionage;* extortion/blackmail; fraud offenses; fugitive offenses;* gambling offenses; homicide offenses; human trafficking; immigration violations;* kidnapping/abduction; larceny/theft offenses; motor vehicle theft; pornography/obscene material; prostitution offenses; robbery; sex offenses; stolen property offenses; treason;* and weapon law violations. The 13 Group B offense categories, for which only arrest data are collected, include bad checks; bond default;* curfew/loitering/vagrancy violations; disorderly conduct; driving under the influence; drunkenness; family offenses, nonviolent; federal resource violation;* liquor law violations; peeping tom; perjury;* trespass of real property; and all other offenses. (Offense categories followed by an asterisk (*) denote those reported by federal and tribal LEAs only.) Beginning in 2019, the NIBRS began collecting additional data values to capture information on domestic violence, cargo theft, and negligent manslaughter.

5. *An estimate of the total number of respondents and the amount of time estimated for an average respondent to respond:* The estimated number of LEAs submitting data to the UCR Program via NIBRS is 9,875. The FBI designed NIBRS to generate data as a byproduct of federal, state, and local automated RMS. Many LEAs have RMS capable of producing a myriad of statistics to meet their particular needs. LEAs forward only the data required by NIBRS to participate in the FBI UCR Program. Each month, it takes approximately two hours for an average respondent to respond, which is an annual burden of 24 hours. The two hours is the time required for a law enforcement agency's RMS to download the NIBRS data and send the information to the FBI.

6. An estimate of the total public burden (in hours) associated with the collection: The estimated annual public burden associated with the NIBRS data collection is 237,000 hours (9,875 LEAs × 24 hours annually = 237,000 total annual hours).

If additional information is required, contact: Melody Braswell, Department Clearance Officer, United States Department of Justice, Justice Management Division, Policy and Planning Staff, Two Constitution Square, 145 N Street NE, 3E.405A, Washington, DC 20530.

Melody Braswell,

Department Clearance Officer for the PRA, US Department of Justice.

[FR Doc. 2021–23794 Filed 11–1–21; 8:45 am]

BILLING CODE 4410–02–P

DEPARTMENT OF JUSTICE

[OMB Number 1117–0049]

Agency Information Collection Activities: Proposed eCollection, eComments Requested; Reinstatement of a Discontinued Collection: Recordkeeping for Electronic Prescriptions for Controlled Substances

AGENCY: Drug Enforcement Administration, Department of Justice.

ACTION: 30-Day notice.

SUMMARY: The Department of Justice (DOJ), Drug Enforcement Administration (DEA), will be submitting the following information collection request to the Office of Management and Budget (OMB) for review and approval in accordance with the Paperwork Reduction Act of 1995.

DATES: Comments are encouraged and will be accepted for 30 days until December 2, 2021.

ADDRESSES: Written comments and recommendations for the proposed information collection should be sent within 30 days of publication of this notice to *www.reginfo.gov/public/do/PRAMain.* Find this particular information collection by selecting ''Currently under 30-day Review—Open for Public Comments'' or by using the search function.

SUPPLEMENTARY INFORMATION: Written comments and suggestions from the public and affected agencies concerning the proposed collection of information are encouraged. Your comments should address one or more of the following four points:

—Evaluate whether the proposed collection of information is necessary for the proper performance of the functions of the agency, including whether the information will have practical utility;

—Evaluate the accuracy of the agency's estimate of the burden of the proposed collection of information, including the validity of the methodology and assumptions used;

—Evaluate whether and if so how the quality, utility, and clarity of the information proposed to be collected can be enhanced; and

—Minimize the burden of the collection of information on those who are to respond, including through the use of appropriate automated, electronic, mechanical, or other forms of information technology, *e.g.,* permitting electronic submission of responses.

Overview of This information Collection

1. *Type of Information Collection:* Reinstatement of a discontinued collection.

2. *Title of the Form/Collection:* Recordkeeping for Electronic Prescriptions for Controlled Substance.

3. *The agency form number, if any, and the applicable component of the Department sponsoring the collection:* There is no form number. The applicable component within the Department of Justice is the Drug Enforcement Administration, Diversion Control Division.

4. *Affected public who will be asked or required to respond, as well as a brief abstract:*

Affected public (Primary): Business or other for-profit.

Affected public (Other): Not-for-profit institutions; Federal, State, local, and tribal governments.

Abstract: DEA requires that each registered practitioner apply to an approved credential service provider to obtain identity proofing and a credential. Hospitals and other institutional practitioners may conduct this process in house as part of their credentialing. For practitioners currently working at or affiliated with a registered hospital or clinic, the hospital/clinic have to check a government-issued photographic identification. This may be done when the hospital/clinic issues credentials to new hires or newly affiliated physicians. For individual practitioners, two people need to enter logical access control data to grant permission for practitioners authorized to approve and sign controlled substance prescriptions using the electronic prescription application. For institutional practitioners, logical access control data is entered by two people from an entity within the hospital/clinic that is separate from the entity that conducts identity proofing in-house. Similarly, pharmacies have to set logical access controls in the pharmacy application so that only authorized employees have permission to annotate or alter prescription records. Finally, if the electronic prescription or pharmacy application generates an incident report, practitioners, hospitals/clinics, and pharmacies have to review the incident report to determine if the event identified by the application represents a security incident.

5. *An estimate of the total number of respondents and the amount of time estimated for an average respondent to respond:* The below table presents information regarding the number of respondents, hour burden per responses and associated burden hours.

	Number of respondents	Hour burden per response	Burden hours
Practitioners	78,164	0.67	52,370
MLP	49,067	0.67	32,875
Hospital/Clinics	1,482	2.13	3,157
Pharmacies	3,984	0.33	1,315
Total	132,697	.....	89,717

6. *An estimate of the total public burden (in hours) associated with the proposed collection:* DEA estimates that this collection takes 89,717 annual burden hours.

If additional information is required please contact: Melody Braswell, Department Clearance Officer, United States Department of Justice, Justice Management Division, Policy and Planning Staff, Two Constitution Square, 145 N Street NE, Suite 3E.405B, Washington, DC 20530.

Dated: October 27, 2021.

Melody Braswell,

Department Clearance Officer for PRA, U.S. Department of Justice.

[FR Doc. 2021–23791 Filed 11–1–21; 8:45 am]

BILLING CODE 4410–09–P

DEPARTMENT OF JUSTICE

[OMB Number 1110–0071]

Agency Information Collection Activities; Proposed eCollection eComments Request; National Use-of-Force Data Collection: Extension of a Currently Approved Collection

AGENCY: Federal Bureau of Investigation, Department of Justice

ACTION: 60-Day notice.

SUMMARY: The Department of Justice, Federal Bureau of Investigation's (FBI's) Criminal Justice Information Services Division is submitting the following information collection request to the Office of Management and Budget (OMB) for review and approval in accordance with the Paperwork Reduction Act of 1995.

DATES: Comments are encouraged and will be accepted for 60 days until January 3, 2022.

FOR FURTHER INFORMATION CONTACT: Written comments and suggestions regarding the items contained in this notice, especially the estimated burden and associated response time, may be sent for consideration in a number of ways.

- OMB recommends that written comments be emailed to *useofforcepublicnotice@fbi.gov*.
- Physical letters with comments and suggestions may be directed to Ms. Amy C. Blasher, Unit Chief, Federal Bureau of Investigation, Criminal Justice Information Services Division, Module D–1, 1000 Custer Hollow Road, Clarksburg, West Virginia 26306. Letters may also be sent to the Office of Management and Budget, Office of Information and Regulatory Affairs, Attention: Department of Justice Desk Officer, Washington, DC 20503 or emailed to OMB at *OIRA_submissions@obb.eop.gov*.

SUPPLEMENTARY INFORMATION: Written comments and suggestions from the public and affected agencies concerning the proposed collection of information are encouraged. Your comments should address one or more of the following four points:

- Evaluate whether the proposed collection of information is necessary for the proper performance of the functions of the FBI, including whether the information will have practical utility;
- Evaluate the accuracy of the agency's estimate of the burden of the proposed collection of information, including the validity of the methodology and assumptions used;
- Evaluate whether, and if so, how the quality, utility, and clarity of the information to be collected can be enhanced; and
- Minimize the burden of the collection of information on those who are to respond, including through the use of appropriate automated, electronic, mechanical, or other technological collection techniques or other forms of information technology, *e.g.,* permitting electronic submission of responses.

Overview of This Information Collection

(1) *Type of Information Collection:* Extension of a currently approved collection.

(2) *The Title of the Form/Collection:* National Use-of-Force Data Collection.

(3) *The agency form number, if any, and the applicable component of the Department sponsoring the collection:* The form number is 1110–0071. Sponsor: Criminal Justice Information Services Division, Federal Bureau of Investigation, Department of Justice.

(4) *Affected public who will be asked or required to respond, as well as a brief abstract:* Federal, state, local, and tribal law enforcement agencies.

Abstract: The FBI has a long-standing tradition of collecting data and providing statistics concerning Law Enforcement Officers Killed and Assaulted (LEOKA) and justifiable homicides. To provide a better understanding of the incidents of use of force by law enforcement, the Uniform Crime Reporting (UCR) Program developed a new data collection for law enforcement agencies to provide information on incidents where the use of force by a law enforcement officer has led to the death or serious bodily injury of a person, as well as when a law enforcement officer discharges a firearm at or in the direction of a person.

When a use of force occurs, federal, state, local, and tribal law enforcement agencies provide information to the data collection on characteristics of the incident, subjects of the use of force, and the officers who applied force in the incident. Agencies positively affirm, on a monthly basis, whether their agency did or did not have a use of force that resulted in a fatality, a serious bodily injury to a person, or a firearm discharge at or in the direction of a person. When no use-of-force incident occurs in a month, agencies submit a zero report. Enrollment information from agencies and state points of contact is collected when the agency or contact initiates participation in the data collection. Enrollment information is updated no less than annually to assist with managing this data.

The new data collection defines a law enforcement officer using the current LEOKA definition: ''All local, county, state, and federal law enforcement officers (such as municipal, county police officers, constables, state police, highway patrol, sheriffs, their deputies, federal law enforcement officers, marshals, special agents, etc.) who are sworn by their respective government authorities to uphold the law and to safeguard the rights, lives, and property of American citizens. They must have full arrest powers and be members of a public governmental law enforcement agency, paid from government funds set aside specifically for payment to sworn police law enforcement organized for the purposes of keeping order and for preventing and detecting crimes, and apprehending those responsible.''

The definition of ''serious bodily injury'' is based, in part, on 18 United States Code (U.S.C.), section 2246 (4), to mean ''bodily injury that involves a substantial risk of death, unconsciousness, protracted and obvious disfigurement, or protracted loss or impairment of the function of a bodily member, organ, or mental faculty.'' These actions include the use of a firearm; an electronic control weapon (*e.g.,* Taser); an explosive device; pepper or OC (oleoresin capsicum) spray or other chemical agent; a baton; an impact projectile; a blunt instrument; hands-fists-feet; or canine.

(5) *A total number of respondents and the amount of time estimated for an average respondent to respond:* As of September 2021, a total of 7,185 agencies covering 443,125 law enforcement officers were enrolled in the National Use-of-Force Data Collection. The burden hours per incident are estimated to be 0.63 of an hour for completion, around 38 minutes per incident.

(6) *An estimate of the total public burden (in hours) associated with the collection:* Burden estimates are based on sources from the FBI UCR Program, the Bureau of Justice Statistics (BJS), and the Centers for Disease Control (CDC). The BJS recently estimated that approximately 1,400 fatalities attributed to a law enforcement use of force occur annually (Planty, et al., 2015, *Arrest-Related Deaths Program: Data Quality Profile, http://www.bjs.gov/index.cfm?ty=pbdetail&iid=5260*). In addition, the CDC estimates the incidences of fatal and nonfatal injury—including those due to legal intervention—from emergency department data. In their study, *The real risks during deadly police shootouts: Accuracy of the naïve shooter,* Lewinski, et al., (2015) estimate law enforcement officers miss their target approximately 50 percent of the time at the firing range. This information was used to develop a simple estimate for the number of times officers discharge a firearm at or in the direction of a person but do not strike the individual. In addition, the FBI UCR Program collects counts of the number of sworn and civilian law enforcement employees in the nation's law enforcement agencies.

The following table shows burden estimates based on previous estimation criteria and current National Use-of-Force Data Collection enrollment numbers.

ESTIMATED BURDEN FOR ALL LAW ENFORCEMENT AGENCIES IN ANNUAL COLLECTION

Timeframe	Reporting group	Approximate number of officers from participating agencies	Maximum per capita rate of use-of-force occurrence per officer	Minimum per capita rate of use-of-force occurrence per officer	Maximum estimated number of incidents	Minimum estimated number of incidents	Estimated burden hours per incident	Maximum estimate total number of burden hours	Minimum estimate total number of burden hours
Collection (Annual)	All agencies submitting data.	443,125	0.122	0.012	49,630	5,318	0.63	31,267	3,350

Based on previous estimation criteria and current enrollment numbers, the FBI is requesting 31,267 burden hours for the annual collection of this data.

If additional information is required, contact: Melody Braswell, Department Clearance Officer, United States Department of Justice, Justice Management Division, Policy and Planning Staff, Two Constitution Square, 145 N Street NE, 3E.405A, Washington, DC 20530.

Dated: October 28, 2021.

Melody Braswell,

Department Clearance Officer for the PRA, U.S. Department of Justice.

[FR Doc. 2021–23885 Filed 11–1–21; 8:45 am]

BILLING CODE 4410–02–P

DEPARTMENT OF JUSTICE

[OMB Number 1110–0068]

Agency Information Collection Activities; Proposed eCollection eComments Requested; Revision if a Currently Approved Collection

AGENCY: Federal Bureau of Investigation, Criminal Justice Information Services Division, Department of Justice.

ACTION: 60-Day notice.

SUMMARY: The Department of Justice, Federal Bureau of Investigation, Criminal Justice Information Services Division, submitting the following information collection request to the Office of Management and Budget (OMB) for review and approval in accordance with the Paperwork Reduction Act of 1995.

DATES: The Department of Justice encourages public comment and will accept input until January 3, 2022.

FOR FURTHER INFORMATION CONTACT: If you have additional comments especially on the estimated public burden or associated response time, suggestions, or need a copy of the proposed information collection instrument with instructions or additional information, please contact Gerry Lynn Brovey, Supervisory Information Liaison Specialist, FBI, CJIS, Resources Management Section, Administrative Unit, Module C–2, 1000 Custer Hollow Road, Clarksburg, West Virginia, 26306; phone: 304–625–4320 or email *glbrovey@fbi.gov.*

SUPPLEMENTARY INFORMATION: Written comments and suggestions from the public and affected agencies concerning the proposed collection of information are encouraged. Your comments should address one or more of the following four points:

➢ Evaluate whether the proposed collection of information is necessary for the proper performance of the functions of the Federal Bureau of Investigation, Criminal Justice Information Services Division, including whether the information will have practical utility;

➢ Evaluate the accuracy of the agency's estimate of the burden of the proposed collection of information, including the validity of the methodology and assumptions used;

➢ Evaluate whether and if so how the quality, utility, and clarity of the information to be collected can be enhanced; and

➢ Minimize the burden of the collection of information on those who are to respond, including through the use of appropriate automated, electronic, mechanical, or other technological collection techniques or other forms of information technology, *e.g.,* permitting electronic submission of responses.

Overview of This Information Collection

1. *Type of Information Collection:* Revision of a currently approved collection.

2. *The Title of the Form/Collection:* Records Modification Form.

3. *The agency form number, if any, and the applicable component of the Department sponsoring the collection:* FD–1115 The applicable component within the Department of Justice is the Federal Bureau of Investigation, Criminal Justice Information Services Division.

4. *Affected public who will be asked or required to respond, as well as a brief abstract:* Primary: This form is utilized by criminal justice and affiliated judicial agencies to request appropriate modification of criminal history information from an individual's record.

5. *An estimate of the total number of respondents and the amount of time estimated for an average respondent to respond:* It is estimated that 105 respondents are authorized to complete the form which would require 5 minutes. The total number of respondents is reoccurring with an annual response of 79,756.

6. *An estimate of the total public burden (in hours) associated with the collection:* There are an estimated 6,646 total annual burden hours associated with this collection.

If additional information is required contact: Melody Braswell, Department Clearance Officer, United States Department of Justice, Justice Management Division, Policy and Planning Staff, Two Constitution Square, 145 N Street NE, 3E.405A, Washington, DC 20530.

Dated: October 27, 2021.

Melody Braswell,

Department Clearance Officer for PRA, U.S. Department of Justice.

[FR Doc. 2021–23793 Filed 11–1–21; 8:45 am]

BILLING CODE 4410–02–P

DEPARTMENT OF JUSTICE

[OMB Number 1140–0050]

Agency Information Collection Activities; Proposed eCollection of eComments Requested; Revision of a Currently Approved Collection; Identification Markings Placed on Firearms

AGENCY: Bureau of Alcohol, Tobacco, Firearms and Explosives, Department of Justice.

ACTION: 30-Day notice.

SUMMARY: The Bureau of Alcohol, Tobacco, Firearms and Explosives (ATF), Department of Justice (DOJ) will submit the following information collection request to the Office of Management and Budget (OMB) for review and approval in accordance with the Paperwork Reduction Act of 1995.

DATES: Comments are encouraged and will be accepted for an additional 30 days until December 2, 2021.

ADDRESSES: Written comments and recommendations for the proposed information collection should be sent within 30 days of publication of this notice to *www.reginfo.gov/public/do/PRAMain.* Find this particular information collection by selecting ''Currently under 30-day Review—Open for Public Comments'' or by using the search function.

SUPPLEMENTARY INFORMATION: Written comments and suggestions from the public and affected agencies concerning the proposed collection of information are encouraged. Your comments should address one or more of the following four points:

—Evaluate whether the proposed collection of information is necessary for the proper performance of the functions of the agency, including whether the information will have practical utility;

—Evaluate the accuracy of the agency's estimate of the burden of the proposed collection of information, including the validity of the methodology and assumptions used;

—Evaluate whether and, if so, how the quality, utility, and clarity of the information to be collected can be enhanced; and

—Minimize the burden of the collection of information on those who are to respond, including through the use of appropriate automated, electronic, mechanical, or other technological collection techniques or other forms of information technology, *e.g.,* permitting electronic submission of responses.

Overview of This Information Collection

(1) *Type of Information Collection:* Revision of a currently approved collection.

(2) *The Title of the Form/Collection:* Identification Markings Placed on Firearms.

(3) *The agency form number, if any, and the applicable component of the Department sponsoring the collection:*

Form number: None.

Component: Bureau of Alcohol, Tobacco, Firearms and Explosives, U.S. Department of Justice.

(4) *Affected public who will be asked or required to respond, as well as a brief abstract:*

Primary: Business or other for-profit.

Other: None.

Abstract: This information collection requires licensed firearms manufacturers and importers to legibly identify each firearm by engraving, casting, stamping (impressing), or otherwise conspicuously placing an individual serial number on the frame or receiver of a firearm. The required firearms identification information supports Federal, State, and local law enforcement officials in crime fighting by facilitating the tracing of firearms used in criminal activities.

(5) *An estimate of the total number of respondents and the amount of time estimated for an average respondent to respond:* An estimated 17,930 respondents will use this collection annually, and it will take each respondent approximately 1 minute to complete each response.

(6) *An estimate of the total public burden (in hours) associated with the collection:* The estimated annual public burden associated with this collection is 66,446 hours, which is equal to 17,930 (total respondents) * 222.3495 (total responses per respondent) * 0.0166667 (1 minute or time taken for each response).

(7) *An Explanation of the Change in Estimates:* Although there is an increase in the total respondents from 13,868 in 2018, to 17,930 in 2021, there is a reduction in both the total responses and burden hours from 5,137,771 to 3,986,663 and 85,630 to 66,446 hours respectively, due to fewer imported firearms. Consequently, the total cost burden for this collection also reduced from $4,726,749 in 2018, to $3,667,730 in 2021.

If additional information is required contact: Melody Braswell, Department Clearance Officer, United States Department of Justice, Justice Management Division, Policy and Planning Staff, Two Constitution Square, 145 N Street NE, Mail Stop 3E.405A, Washington, DC 20530.

Dated: October 27, 2021.

Melody Braswell,

Department Clearance Officer for PRA, U.S. Department of Justice.

[FR Doc. 2021–23790 Filed 11–1–21; 8:45 am]

BILLING CODE 4410–FY–P

DEPARTMENT OF LABOR

Occupational Safety and Health Administration

[Docket No. OSHA–2021–0005]

LabTest Certification Inc.: Grant of Recognition

AGENCY: Occupational Safety and Health Administration (OSHA), Labor.

ACTION: Notice.

SUMMARY: In this notice, OSHA announces the final decision to grant recognition to LabTest Certification, Inc. (LCI), as a Nationally Recognized Testing Laboratory (NRTL).

DATES: Recognition as a NRTL becomes effective on November 2, 2021.

FOR FURTHER INFORMATION CONTACT: Information regarding this notice is available from the following sources:

Press inquiries: Contact Mr. Frank Meilinger, Director, OSHA Office of Communications, U.S. Department of Labor, telephone: (202) 693–1999; email: *meilinger.francis2@dol.gov.*

General and technical information: Contact Mr. Kevin Robinson, Director, Office of Technical Programs and Coordination Activities, Directorate of Technical Support and Emergency Management, Occupational Safety and Health Administration, U.S. Department of Labor, telephone: (202) 693–2110; email: *robinson.kevin@dol.gov.*

SUPPLEMENTARY INFORMATION:

I. Background

Many of OSHA's workplace standards require that a NRTL test and certify certain types of equipment as safe for use in the workplace. NRTLs are independent laboratories that meet OSHA's requirements for performing safety testing and certification of products used in the workplace. To obtain and retain OSHA recognition, the NRTLs must meet the requirements in the NRTL Program regulations at 29 CFR 1910.7. More specifically, to be recognized by OSHA, an organization must: (1) Have the appropriate capability to test, evaluate, and approve products to assure their safe use in the workplace; (2) be completely independent of employers subject to the

tested equipment requirements, and manufacturers and vendors of products for which OSHA requires certification; (3) have internal programs that ensure proper control of the testing and certification process; and (4) have effective reporting and complaint handling procedures. Recognition is an acknowledgement by OSHA that the NRTL has the capabilities to perform independent safety testing and certification of the specific products covered within the NRTL's scope of recognition and is not a delegation or grant of government authority. Recognition of a NRTL by OSHA also allows employers to use products certified by that NRTL to meet those OSHA standards that require product testing and certification.

The agency processes applications for initial recognition following requirements in Appendix A of 29 CFR 1910.7. This appendix requires OSHA to publish two notices in the **Federal Register** in processing an application. In the first notice, OSHA announces the application, provides its preliminary findings, and solicits comments on its preliminary findings. In the second notice, the agency provides its final decision on the application and sets forth the NRTL's scope of recognition.

II. Notice of Final Decision

OSHA hereby gives notice of the agency's decision to grant recognition to LabTest Certification, Inc., (LCI) as a NRTL. According to public information (see *https://labtestcert.com/about-labtest/*) LCI states that it is an internationally accredited testing laboratory. In its application, LCI lists the current address of its headquarters as: LabTest Certification, Inc., 205—8291 92 Street, Delta, BC Canada V4G 0A4. OSHA has determined preliminarily that LCI has the capability to perform as a NRTL as outlined in 29 CFR 1910.7.

Each NRTL's scope of recognition has two elements: (1) The type(s) of products the NRTL may test, with each type specified by its applicable test standard; and (2) the recognized site(s) that have the technical capability to perform the product-testing and product-certification activities for the applicable test standards within the NRTL's scope of recognition. LCI applied on January 29, 2016, for one recognized site (OSHA–2021–0005–0001). This application was amended on June 10, 2021, to remove three of the eight standards requested in the original application. LCI's original application also requested that supplemental programs be included in their recognition. However, on October 1, 2019, OSHA published an update to the NRTL Program Policies, Procedures and Guidelines Directive, CPL 01–00–004, which eliminated supplemental programs from the NRTL Program. Therefore, OSHA does not grant recognition to NRTL applicants for supplemental programs. OSHA published the preliminary notice announcing LCI's application for recognition in the **Federal Register** on August 16, 2021 (86 FR 45762). The agency requested comments by September 15, 2021, but it received no comments in response to this notice. OSHA is now proceeding with this final notice to grant recognition to LCI as a NRTL.

To obtain or review copies of all public documents pertaining to LCI's application, go to *www.regulations.gov* or contact the Docket Office at (202) 693–2350 (TTY (877) 889–5627). Docket No. OSHA–2021–0005 contains all materials in the record concerning LCI's recognition.

III. Final Decision and Order

OSHA staff performed a detailed analysis of LCI's application packet and reviewed other pertinent information. OSHA staff also performed comprehensive on-site assessments of LCI's testing facilities, at LCI, Delta BC on December 11–12, 2018. Based on the review of this evidence, OSHA finds that LCI meets the requirements of 29 CFR 1910.7 for recognition as a NRTL, subject to the limitations and conditions listed below. OSHA, therefore is proceeding with this final notice to grant recognition to LCI as a NRTL. The following sections set forth the scope of recognition included in LCI's grant of recognition.

A. Standards Requested for Recognition

OSHA limits LCI's scope of recognition to testing and certification of products for demonstration of conformance to the test standards listed in Table 1 below.

TABLE 1—APPROPRIATE TEST STANDARDS FOR INCLUSION IN LCI'S NRTL SCOPE OF RECOGNITION

Test standard	Test standard title
UL 1598	Luminaires.
UL 60079–0	Explosive Atmospheres—Part 0: Equipment—General Requirements.
UL 60079–1	Explosive Atmospheres—Part 1: Equipment Protection by Flameproof Enclosures "d".
UL 60079–11	Explosive Atmospheres—Part 11: Equipment Protection by Intrinsic Safety "i".
UL 60079–15	Explosive Atmospheres—Part 15: Equipment Protection by Type of Protection "n".

B. Sites Requested for Recognition

OSHA limits LCI's scope of recognition to include one site: LabTest Certification, Inc., 205—8291 92 Street, Delta, BC Canada V4G 0A4. OSHA's recognition of these sites limits LCI to performing product testing and certifications only to the test standards for which the site has the proper capability and programs, and for the test standards in LCI's scope of recognition.

C. Conditions

In addition to those conditions already required by 29 CFR 1910.7, LCI also must abide by the following conditions of the recognition:

1. LCI must inform OSHA as soon as possible, in writing, of any change of ownership, facilities, or key personnel, and of any major change in the operations as a NRTL, and provide details of the change(s);

2. LCI must meet all the terms of the recognition and comply with all OSHA policies pertaining to this recognition; and

3. LCI must continue to meet the requirements for recognition, including all previously published conditions on LCI's scope of recognition, in all areas for which it has recognition.

Pursuant to the authority in 29 CFR 1910.7, OSHA hereby grants recognition to LCI as a NRTL, subject to these limitations and conditions specified above.

IV. Authority and Signature

James S. Frederick, Acting Assistant Secretary of Labor for Occupational Safety and Health, authorized the preparation of this notice. Accordingly, the agency is issuing this notice pursuant to 29 U.S.C. 657(g)(2), Secretary of Labor's Order No. 8–2020

(85 FR 58393, September 18, 2020) and 29 CFR 1910.7.

Signed at Washington, DC, on October 20, 2021.

James S. Frederick,

Acting Assistant Secretary of Labor for Occupational Safety and Health.

[FR Doc. 2021–23892 Filed 11–1–21; 8:45 am]

BILLING CODE 4510–26–P

NATIONAL AERONAUTICS AND SPACE ADMINISTRATION

[Notice: 21–071]

Name of Information Collection: NASA Serves the Public To Inspire Reach-Out and Engage (NSPIREHub)

AGENCY: National Aeronautics and Space Administration (NASA).

ACTION: Notice of information collection.

SUMMARY: The National Aeronautics and Space Administration, as part of its continuing effort to reduce paperwork and respondent burden, invites the general public and other Federal agencies to take this opportunity to comment on proposed and/or continuing information collections.

DATES: Comments are due by December 2, 2021.

ADDRESSES: Written comments and recommendations for this information collection should be sent within 30 days of publication of this notice to *www.reginfo.gov/public/do/PRAMain.* Find this particular information collection by selecting ''Currently under 30-day Review—Open for Public Comments'' or by using the search function.

FOR FURTHER INFORMATION CONTACT: Requests for additional information or copies of the information collection instrument(s) and instructions should be directed to Claire Little, NASA Clearance Officer, NASA Headquarters, 202–358–2375, 300 E Street SW, JF0000, Washington, DC 20546 or email *claire.a.little@nasa.gov*.

SUPPLEMENTARY INFORMATION:

I. Abstract

The National Aeronautics and Space Administration (NASA) is committed to effectively performing the Agency's communication function in accordance with the Space Act Section 203 (a) (3) to ''provide for the widest practicable and appropriate dissemination of information concerning its activities and the results there of,'' and to enhance public understanding of, and participation in, the nation's space program in accordance with the NASA Strategic Plan.

The NASA Serves the Public to Inspire Reach-Out and Engage (NSPIREHub) is a one-stop, web-based volunteer management system that streamlines communications, recruitment and marketing and enhances reporting and management of official outreach events. The NSPIREHub engages, informs and inspires current docents, employees (civil servants and contractors), interns and qualified members of the general public to share NASA's advancements, challenges and contributions through participation in official outreach (*i.e.,* launch support, special events support activities, etc.).

The NSPIREHub utilizes a multiple tiered, role-based NAMS provisioning to empower system administrators to request and collect specific user information for the purpose of coordinating the carrying out of NASA's official outreach activities. These specific purposes include but are not limited to: Facilitating pre-event briefings, onsite and virtual support trainings, shadowing opportunities and assignment scheduling.

The information collected and protected within the NSPIREHub helps to ensure all outreach support team members, prior to serving, are equipped with the tools, skills, and confidence necessary to share their stories in alignment with NASA's communication priorities. It also makes possible the efficient reporting of metric data relevant to the impact of official outreach on fulfillment of NASA's responsibilities as related to the Space Act, section 203.

II. Methods of Collection

Electronic.

III. Data

Title: NASA Serves the Public to Inspire, Reach-out, and Engage VolunteerHub (NSPIREHub).

OMB Number:

Type of review: New.

Affected Public: Individuals.

Estimated Annual Number of Activities: 5,250.

Estimated Number of Respondents per Activity: 3.

Annual Responses: 15,750.

Estimated Time per Response: 10 minutes.

Estimated Total Annual Burden Hours: 2,630.

Estimated Total Annual Cost: $66,938.

IV. Request for Comments

Comments are invited on: (1) Whether the proposed collection of information is necessary for the proper performance of the functions of NASA, including whether the information collected has practical utility; (2) the accuracy of NASA's estimate of the burden (including hours and cost) of the proposed collection of information; (3) ways to enhance the quality, utility, and clarity of the information to be collected; and (4) ways to minimize the burden of the collection of information on respondents, including automated collection techniques or the use of other forms of information technology.

Comments submitted in response to this notice will be summarized and included in the request for OMB approval of this information collection. They will also become a matter of public record.

Cheryl Parker,

Federal Register Liaison Officer.

[FR Doc. 2021–23851 Filed 11–1–21; 8:45 am]

BILLING CODE 7510–13–P

NATIONAL AERONAUTICS AND SPACE ADMINISTRATION

[Notice: 21–071]

Information Collection: NASA Property in the Custodian of Contractors

AGENCY: National Aeronautics and Space Administration (NASA).

ACTION: Notice of information collection.

SUMMARY: The National Aeronautics and Space Administration, as part of its continuing effort to reduce paperwork and respondent burden, invites the general public and other Federal agencies to take this opportunity to comment on proposed and/or continuing information collections.

DATES: Comments are due by December 2, 2021.

ADDRESSES: Written comments and recommendations for this information collection should be sent within 30 days of publication of this notice to *www.reginfo.gov/public/do/PRAMain.*

Find this particular information collection by selecting ''Currently under 30-day Review—Open for Public Comments'' or by using the search function.

FOR FURTHER INFORMATION CONTACT: Requests for additional information or copies of the information collection instrument(s) and instructions should be directed to Claire Little, NASA Clearance Officer, NASA Headquarters, 202–358–2375, 300 E Street SW, JF0000, Washington, DC 20546 or email *claire.a.little@nasa.gov*.

SUPPLEMENTARY INFORMATION:

I. Abstract

To ensure accurate reporting of Government-owned, contractor-held property on the financial statements and to provide information necessary for effective property management in accordance with FAR Part 45, NASA obtains summary data annually from the official Government property records maintained by its contractors. The information is submitted via the NASA Form 1018, at the end of each fiscal year. Additional information submitted to approve the accuracy of the contractor property management system compliance is submitted via NASA Form 1019, at the beginning of awards with NASA property in the hands of contractors; and same information gathered by Federal agencies assisting NASA according to risk matrix. Information for property management system in accordance with FAR Part 45, NASA is the agency responsible for contract administration shall conduct an analysis of the contractor's property management policies, procedures, practices, and systems.

II. Methods of Collection

Electronic.

III. Data

Title: NASA Property in the Custody of Contractors.

OMB Number: 2700–0017.

Type of review: Renewal of a previously approved information collection.

Affected Public: Business or other for-profit and not-for-profit institutions.

Estimated Annual Number of Activities: 1,200.

Estimated Number of Respondents per Activity: 1.

Annual Responses: 1,200.

Estimated Time per Response: 1.5 hours.

Estimated Total Annual Burden Hours: 1,800.

Estimated Total Annual Cost: $36,000.

IV. Request for Comments

Comments are invited on: (1) Whether the proposed collection of information is necessary for the proper performance of the functions of NASA, including whether the information collected has practical utility; (2) the accuracy of NASA's estimate of the burden (including hours and cost) of the proposed collection of information; (3) ways to enhance the quality, utility, and clarity of the information to be collected; and (4) ways to minimize the burden of the collection of information on respondents, including automated collection techniques or the use of other forms of information technology.

Comments submitted in response to this notice will be summarized and included in the request for OMB approval of this information collection. They will also become a matter of public record.

Cheryl Parker,

Federal Register Liaison Officer.

[FR Doc. 2021–23850 Filed 11–1–21; 8:45 am]

BILLING CODE 7510–13–P

NATIONAL ARCHIVES AND RECORDS ADMINISTRATION

[NARA–21–0017; NARA–2022–007]

Records Schedules; Availability and Request for Comments

AGENCY: National Archives and Records Administration (NARA).

ACTION: Notice of availability of proposed records schedules; request for comments.

SUMMARY: The National Archives and Records Administration (NARA) publishes notice of certain Federal agency requests for records disposition authority (records schedules). We publish notice in the **Federal Register** and on *regulations.gov* for records schedules in which agencies propose to dispose of records they no longer need to conduct agency business. We invite public comments on such records schedules.

DATES: NARA must receive responses on the schedules listed in this notice by December 17, 2021.

ADDRESSES: You may submit comments by the following method:

- *Federal eRulemaking Portal: http://www.regulations.gov.* On the website, enter either of the numbers cited at the top of this notice into the search field. This will bring you to the docket for this notice, in which we have posted the records schedules open for comment. Each schedule has a 'comment' button so you can comment on that specific schedule.

Due to COVID–19 building closures, we are currently temporarily not accepting comments by mail. However, if you are unable to comment via *regulations.gov,* you may contact *request.schedule@nara.gov* for instructions on submitting your comment. You must cite the control number of the schedule you wish to comment on. You can find the control number for each schedule in parentheses at the end of each schedule's entry in the list at the end of this notice.

FOR FURTHER INFORMATION CONTACT: Kimberly Keravuori, Regulatory and External Policy Program Manager, by email at *regulation_comments@nara.gov.* For information about records schedules, contact Records Management Operations by email at *request.schedule@nara.gov* or by phone at 301–837–1799.

SUPPLEMENTARY INFORMATION:

Public Comment Procedures

We are publishing notice of records schedules in which agencies propose to dispose of records they no longer need to conduct agency business. We invite public comments on these records schedules, as required by 44 U.S.C. 3303a(a), and list the schedules at the end of this notice by agency and subdivision requesting disposition authority.

In addition, this notice lists the organizational unit(s) accumulating the records or states that the schedule has agency-wide applicability. It also provides the control number assigned to each schedule, which you will need if you submit comments on that schedule.

We have uploaded the records schedules and accompanying appraisal memoranda to the *regulations.gov* docket for this notice as ''other'' documents. Each records schedule contains a full description of the records at the file unit level as well as their proposed disposition. The appraisal memorandum for the schedule includes information about the records.

We will post comments, including any personal information and attachments, to the public docket unchanged. Because comments are public, you are responsible for ensuring that you do not include any confidential or other information that you or a third party may not wish to be publicly posted. If you want to submit a comment with confidential information or cannot otherwise use the *regulations.gov* portal, you may contact *request.schedule@nara.gov* for instructions on submitting your comment.

We will consider all comments submitted by the posted deadline and consult as needed with the Federal agency seeking the disposition authority. After considering comments, we will post on *regulations.gov* a ''Consolidated Reply'' summarizing the comments, responding to them, and noting any changes we have made to the proposed records schedule. We will then send the schedule for final approval by the Archivist of the United States. You may elect at *regulations.gov* to receive updates on the docket, including an alert when we post the

Consolidated Reply, whether or not you submit a comment. If you have a question, you can submit it as a comment, and can also submit any concerns or comments you would have to a possible response to the question. We will address these items in consolidated replies along with any other comments submitted on that schedule.

We will post schedules on our website in the Records Control Schedule (RCS) Repository, at *https://www.archives.gov/records-mgmt/rcs,* after the Archivist approves them. The RCS contains all schedules approved since 1973.

Background

Each year, Federal agencies create billions of records. To control this accumulation, agency records managers prepare schedules proposing retention periods for records and submit these schedules for NARA's approval. Once approved by NARA, records schedules provide mandatory instructions on what happens to records when no longer needed for current Government business. The records schedules authorize agencies to preserve records of continuing value in the National Archives or to destroy, after a specified period, records lacking continuing administrative, legal, research, or other value. Some schedules are comprehensive and cover all the records of an agency or one of its major subdivisions. Most schedules, however, cover records of only one office or program or a few series of records. Many of these update previously approved schedules, and some include records proposed as permanent.

Agencies may not destroy Federal records without the approval of the Archivist of the United States. The Archivist grants this approval only after thorough consideration of the records' administrative use by the agency of origin, the rights of the Government and of private people directly affected by the Government's activities, and whether or not the records have historical or other value. Public review and comment on these records schedules is part of the Archivist's consideration process.

Schedules Pending

1. Department of Defense, Defense Logistics Agency, Records related to Audits and Reviews (DAA–0361–2021–0017).

2. Department of Veterans Affairs, Veterans Health Administration, Records of Performance Compliance Assurance Audits for Business Associates (DAA–0015–2021–0002).

Laurence Brewer,

Chief Records Officer for the U.S. Government.

[FR Doc. 2021–23827 Filed 11–1–21; 8:45 am]

BILLING CODE 7515–01–P

NUCLEAR REGULATORY COMMISSION

[Docket Nos. 50–327 and 50–328; NRC–2021–0178]

Tennessee Valley Authority; Sequoyah Nuclear Plant, Units 1 and 2

AGENCY: Nuclear Regulatory Commission.

ACTION: Exemption; issuance.

SUMMARY: The U.S. Nuclear Regulatory Commission (NRC) has issued an exemption in response to a September 23, 2020, request from the Tennessee Valley Authority to allow for the use of Optimized ZIRLO™ fuel rod cladding at Sequoyah Nuclear Plant, Units 1 and 2.

DATES: The exemption was issued on October 26, 2021.

ADDRESSES: Please refer to Docket ID NRC–2021–0178 when contacting the NRC about the availability of information regarding this document. You may obtain publicly available information related to this document using any of the following methods:

- *Federal Rulemaking Website:* Go to *https://www.regulations.gov* and search for Docket ID NRC–2021–0178. Address questions about Docket IDs in *Regulations.gov* to Stacy Schumann; telephone: 301–415–0624; email: *Stacy.Schumann@nrc.gov.* For technical questions, contact the individual listed in the **FOR FURTHER INFORMATION CONTACT** section of this document.
- *NRC's Agencywide Documents Access and Management System (ADAMS):* You may obtain publicly available documents online in the ADAMS Public Documents collection at *https://www.nrc.gov/reading-rm/adams.html.* To begin the search, select ''Begin Web-based ADAMS Search.'' For problems with ADAMS, contact the NRC's Public Document Room (PDR) reference staff at 1–800–397–4209, 301–415–4737, or by email to *pdr.resource@nrc.gov.* For the convenience of the reader, instructions about obtaining materials referenced in this document are provided in the ''Availability of Documents'' section.
- *Attention:* The PDR, where you may examine and order copies of public documents, is currently closed. You may submit your request to the PDR via email at *pdr.resource@nrc.gov* or call 1–800–397–4209 or 301–415–4737, between 8:00 a.m. and 4:00 p.m. (ET), Monday through Friday, except Federal holidays.

FOR FURTHER INFORMATION CONTACT: Perry Buckberg, Office of Nuclear Reactor Regulation, U.S. Nuclear Regulatory Commission, Washington, DC 20555–0001; telephone: 301–415–1383, email: *Perry.Buckberg@nrc.gov.*

SUPPLEMENTARY INFORMATION: The text of the exemption is attached.

Dated: October 28, 2021.

For the Nuclear Regulatory Commission.

Perry H. Buckberg,

Senior Project Manager, Plant Licensing Branch II–2, Division of Operating Reactor Licensing, Office of Nuclear Reactor Regulation.

Attachment—Exemption

NUCLEAR REGULATORY COMMISSION

Docket Nos. 50–327 and 50–328

Tennessee Valley Authority, Sequoyah Nuclear Plant, Units 1 and 2 Exemption

I. Background

The Tennessee Valley Authority (TVA) is the holder of Renewed Facility Operating License Nos. DPR–77 and DPR–79, which authorize operation of Sequoyah Nuclear Plant, Units 1 and 2 (Sequoyah). The licenses provide, among other things, that the facilities are subject to all rules, regulations, and orders of the NRC now, or hereafter, in effect. The Sequoyah units are pressurized-water reactors located in Hamilton County, Tennessee, approximately 9.5 miles northeast of Chattanooga. TVA plans to use fuel rods with Optimized ZIRLO™ cladding. Optimized ZIRLO cladding was developed to provide enhanced corrosion resistance in more adverse in-reactor primary chemistry environments and at higher fuel duties with higher burnups.

II. Request/Action

By letter dated September 23, 2020, TVA requested an exemption from title 10 of the *Code of Federal Regulations* (10 CFR) section 50.46, ''Acceptance criteria for emergency core cooling systems [ECCS] for light-water nuclear power reactors,'' and 10 CFR part 50, appendix K, ''ECCS Evaluation Models,'' to allow the use of Optimized ZIRLO fuel rod cladding for future core reload applications. The regulations in 10 CFR 50.46 contain acceptance criteria for the ECCS for reactors fueled with zircaloy or ZIRLO® fuel rod cladding material. In addition, paragraph I.A.5 of 10 CFR part 50,

appendix K, requires that the Baker-Just equation be used to predict the rates of energy release, hydrogen concentration, and cladding oxidation from the metal/water reaction. The Baker-Just equation presumes the use of zircaloy or ZIRLO cladding material. Therefore, an exemption to 10 CFR 50.46 and 10 CFR part 50, appendix K, was requested to support the use of Optimized ZIRLO fuel rod cladding at Sequoyah.

The exemption request relates solely to the specific types of cladding material specified in these regulations for use in light-water reactors (*i.e.,* fuel rods with zircaloy or ZIRLO cladding). This request will provide for the application of the acceptance criteria of 10 CFR 50.46 and 10 CFR part 50, appendix K, to fuel assembly designs using Optimized ZIRLO fuel rod cladding.

III. Discussion

Pursuant to 10 CFR 50.12, the Commission may, upon application by any interested person or upon its own initiative, grant exemptions from the requirements of 10 CFR part 50 when: (1) The exemptions are authorized by law, will not present an undue risk to public health or safety, and are consistent with the common defense and security; and (2) when special circumstances are present. Under 10 CFR 50.12(a)(2), special circumstances include, among other things, when application of the specific regulation in the particular circumstance would not serve, or is not necessary to achieve, the underlying purpose of the rule.

The Optimized ZIRLO fuel cladding is different from standard ZIRLO in two respects: (1) The tin content is lower and (2) the microstructure is different. This difference in tin content and microstructure can lead to differences in some material properties. Westinghouse Electric Company (Westinghouse), the manufacturer of Optimized ZIRLO fuel rod cladding, has provided irradiated data and validate fuel performance models ahead of burnups achieved in batch application (*i.e.,* a group of fuel assemblies).

The NRC staff's safety evaluation dated June 10, 2005, related to Optimized ZIRLO, which is included as Addendum 1 of Westinghouse topical report WCAP–12610–P–A & CENPD–404–P–A, included ten conditions and limitations. The NRC staff reviewed TVA's exemption request found in enclosure 5 of TVA's letter dated September 23, 2020, and enclosure 1, attachment 8 of the same letter, which addresses the licensee's compliance with each of the ten conditions and limitations. Based on its review, the NRC staff determined that the licensee satisfied all applicable conditions and limitations. The NRC staff evaluation of how the licensee addressed each of the ten conditions and limitations may be found in Section 3.8.10 of the staff Safety Evaluation related to Amendment Nos. 356 and 349 to Renewed Facility Operating License Nos. DPR–77 and DPR–79 for Sequoyah, dated October 26, 2021, which authorizes the transition to Westinghouse RFA–2 fuel.

A. The Exemption Is Authorized by Law

This exemption would allow the use of Optimized ZIRLO fuel rod cladding material at Sequoyah. As stated above, 10 CFR 50.12 allows the NRC to grant exemptions from the requirements of 10 CFR part 50, provided, among other things, it finds that special circumstances are present. As described here and in the sections below, the NRC staff makes the requisite exemption findings. The fuel that will be irradiated at Sequoyah contains cladding material that differs from the cladding material that is explicitly defined in 10 CFR 50.46 and implicitly defined in 10 CFR part 50, appendix K. However, the criteria of these regulations will continue to be satisfied for the operation of the Sequoyah cores containing Optimized ZIRLO fuel cladding. The NRC staff has determined that granting the licensee's proposed exemption would not result in a violation of the Atomic Energy Act of 1954, as amended, other laws, or the Commission's regulations. Therefore, the exemption is authorized by law.

B. The Exemption Presents No Undue Risk to Public Health and Safety

The NRC-approved Optimized ZIRLO topical report, WCAP–12610–P–A & CENPD–404–P–A, Addendum 1–A, has demonstrated that predicted chemical, thermal, and mechanical characteristics of the Optimized ZIRLO-alloy cladding are bounded by those approved for ZIRLO under anticipated operational occurrences and postulated accidents. The report demonstrates an acceptable retention of post-quench ductility up to 2200 degrees Fahrenheit and oxidation of not more than 17 percent cladding thickness within 10 CFR 50.46 limits. Reload cores are required to be operated in accordance with the operating limits specified in the TSs and core operating limits report. Thus, the granting of this exemption request will not pose an undue risk to public health and safety.

C. The Exemption Is Consistent With the Common Defense and Security

The exemption request would allow the licensee to use an improved fuel rod cladding material. In its letter dated September 23, 2020, the licensee stated that all the requirements and acceptance criteria will be maintained. Therefore, the use of Optimized ZIRLO-clad fuel rods will not adversely affect plant operations. Further, the licensee is required to handle and control special nuclear material in these assemblies in accordance with its approved procedures. Therefore, the NRC staff determined that this exemption does not adversely impact common defense and security.

D. Special Circumstances

Special circumstances, in accordance with § 50.12(a)(2)(ii), are present whenever application of the regulation in the particular circumstances is not necessary to achieve the underlying purpose of the rule. The underlying purposes of 10 CFR 50.46 and 10 CFR part 50, appendix K, are to establish acceptance criteria for ECCS performance. The underlying purpose of the rule to maintain post-quench ductility in the fuel cladding material through ECCS performance criteria, and to ensure that analyses of fuel response are conservatively calculated, will continue to be achieved through the application of 10 CFR 50.46 and 10 part 50, appendix K, to the new cladding. The regulations ensure that nuclear power reactors fueled with uranium oxide pellets within zircaloy or ZIRLO cladding must be provided with an ECCS designed to provide core cooling following postulated loss-of-coolant accidents. Westinghouse demonstrated in its NRC-approved topical report WCAP–12610–P–A & CENPD–404–P–A Addendum 1–A that ECCS effectiveness will not be adversely affected by a change from zircaloy or ZIRLO clad fuel to Optimized ZIRLO clad fuel. The Westinghouse analysis also demonstrated that the ECCS acceptance criteria applied to reactors with fuel in zircaloy or ZIRLO fuel rod cladding are also applicable to reactors fueled with Optimized ZIRLO clad fuel. Normal safety analyses performed prior to core reload will confirm that there is no adverse impact on ECCS performance. Therefore, because the underlying purposes of 10 CFR 50.46 and 10 CFR part 50, appendix K, are achieved through the use of Optimized ZIRLO fuel rod cladding material, the special circumstances required by 10 CFR 50.12(a)(2)(ii) for the granting of an exemption exist.

E. Environmental Considerations

In 10 CFR 51.22, the Commission determined that certain NRC actions are eligible for categorical exclusion from the requirement to prepare an

environmental assessment or an environmental impact statement because each action category does not individually or cumulatively have a significant effect on the human environment.

The NRC staff determined that the exemption discussed herein meets the eligibility criteria for the categorical exclusion set forth in 10 CFR 51.22(c)(9) because it is related to a requirement concerning the installation or use of a facility component located within the restricted area, as defined in 10 CFR part 20, and the granting of this exemption involves: (1) No significant hazards consideration [NSHC], (2) no significant change in the types or a significant increase in the amounts of any effluents that may be released offsite, and (3) no significant increase in individual or cumulative occupational radiation exposure. Therefore, in accordance with § 51.22(b), no environmental impact statement or environmental assessment need be prepared in connection with the NRC staff's consideration of this exemption request. The basis for the NRC staff's determination is in the licensee's discussion of the 10 CFR 51.22(c)(9) criteria in the associated LAR noticed in the **Federal Register** on December 1, 2020 (85 FR 77265). In addition, because Optimized ZIRLO cladding has essentially the same material properties and performance characteristics, and is adequately controlled by 10 CFR 50.46 and 10 CFR part 50, appendix K.I.A.5, the use of Optimized ZIRLO will not significantly increase the types or amounts of effluents that may be released offsite, significantly increase individual occupational radiation exposure, or significantly increase cumulative occupational radiation exposure. Therefore, pursuant to 10 CFR 51.22(b), no environmental impact statement or environmental assessment need be prepared in connection with the NRC staff's consideration of this exemption request.

IV. Availability of Documents

The documents identified in the following table are available to interested persons through one or more of the following methods, as indicated.

Document	ADAMS accession No.
TVA, ''Application to Modify the Sequoyah Nuclear Plant Units 1 and 2 Technical Specification to Allow for Transition to Westinghouse RFA–2 Fuel (SQN–TS–20–09)'' (September 23, 2020).	ML20267A617
Westinghouse, ''Final Safety Evaluation for Addendum 1 to Topical Report WCAP–12610–P–A & CENPD–404–P–A Addendum 1–A, 'Optimized ZIRLO' '' (June 10, 2005).	ML051670395
NRC Safety Evaluation related to Amendment Nos. 356 and 349 to Renewed Facility Operating License Nos. DPR–77 and DPR–79 for Tennessee Valley Authority Sequoyah Nuclear Plant, Units 1 and 2, Docket Nos. 50 327 And 50 328 (October 26, 2021).	ML21245A267

V. Conclusions

Accordingly, the Commission has determined that, pursuant to 10 CFR 50.12, the exemption is authorized by law, will not present an undue risk to the public health and safety, and is consistent with the common defense and security. Also, special circumstances are present. Therefore, the Commission hereby grants TVA an exemption from 10 CFR 50.46 and 10 CFR part 50, appendix K paragraph I.A.5, to allow for the use of Optimized ZIRLO fuel rod cladding material at Sequoyah.

Dated this 26 day of October, 2021.

For the Nuclear Regulatory Commission.

Bo M. Pham,

Director, Division of Operating Reactor Licensing, Office of Nuclear Reactor Regulation.

[FR Doc. 2021–23843 Filed 11–1–21; 8:45 am]

BILLING CODE 7590–01–P

NUCLEAR REGULATORY COMMISSION

[NRC–2021–0200]

Monthly Notice; Applications and Amendments to Facility Operating Licenses and Combined Licenses Involving No Significant Hazards Considerations

AGENCY: Nuclear Regulatory Commission.

ACTION: Monthly notice.

SUMMARY: Pursuant to section 189.a.(2) of the Atomic Energy Act of 1954, as amended (the Act), the U.S. Nuclear Regulatory Commission (NRC) is publishing this regular monthly notice. The Act requires the Commission to publish notice of any amendments issued, or proposed to be issued, and grants the Commission the authority to issue and make immediately effective any amendment to an operating license or combined license, as applicable, upon a determination by the Commission that such amendment involves no significant hazards consideration (NSHC), notwithstanding the pendency before the Commission of a request for a hearing from any person. This monthly notice includes all amendments issued, or proposed to be issued, from September 17, 2021, to October 14, 2021. The last monthly notice was published on October 5, 2021.

DATES: Comments must be filed by December 2, 2021. A request for a hearing or petitions for leave to intervene must be filed by January 3, 2022.

ADDRESSES: You may submit comments by any of the following methods; however, the NRC encourages electronic comment submission through the Federal Rulemaking website:

- *Federal Rulemaking Website:* Go to *https://www.regulations.gov* and search for Docket ID NRC–2021–0200. Address questions about Docket IDs in *Regulations.gov* to Stacy Schumann; telephone: 301–415–0624; email: *Stacy.Schumann@nrc.gov.* For technical questions, contact the individual listed in the **FOR FURTHER INFORMATION CONTACT** section of this document.
- *Mail comments to:* Office of Administration, Mail Stop: TWFN–7–A60M, U.S. Nuclear Regulatory Commission, Washington, DC 20555–0001, ATTN: Program Management, Announcements and Editing Staff.

For additional direction on obtaining information and submitting comments, see ''Obtaining Information and Submitting Comments'' in the **SUPPLEMENTARY INFORMATION** section of this document.

FOR FURTHER INFORMATION CONTACT: Rhonda Butler, Office of Nuclear

Reactor Regulation, U.S. Nuclear Regulatory Commission, Washington, DC 20555–0001, telephone: 301–415–8025, email: *Rhonda.Butler@nrc.gov.*

SUPPLEMENTARY INFORMATION:

I. Obtaining Information and Submitting Comments

A. Obtaining Information

Please refer to Docket ID NRC–2021–0200, facility name, unit number(s), docket number(s), application date, and subject when contacting the NRC about the availability of information for this action. You may obtain publicly available information related to this action by any of the following methods:

- *Federal Rulemaking Website:* Go to *https://www.regulations.gov* and search for Docket ID NRC–2021–0200.
- *NRC's Agencywide Documents Access and Management System (ADAMS):* You may obtain publicly available documents online in the ADAMS Public Documents collection at *https://www.nrc.gov/reading-rm/adams.html.* To begin the search, select ''Begin Web-based ADAMS Search.'' For problems with ADAMS, please contact the NRC's Public Document Room (PDR) reference staff at 1–800–397–4209, 301–415–4737, or by email to *pdr.resource@nrc.gov.* The ADAMS accession number for each document referenced (if it is available in ADAMS) is provided the first time that it is mentioned in this document.
- *Attention:* The PDR, where you may examine and order copies of public documents, is currently closed. You may submit your request to the PDR via email at *pdr.resource@nrc.gov* or call 1–800–397–4209 or 301–415–4737, between 8:00 a.m. and 4:00 p.m. (ET), Monday through Friday, except Federal holidays.

B. Submitting Comments

The NRC encourages electronic comment submission through the Federal Rulemaking website (*https://www.regulations.gov*). Please include Docket ID NRC–2021–0200, facility name, unit number(s), docket number(s), application date, and subject, in your comment submission.

The NRC cautions you not to include identifying or contact information that you do not want to be publicly disclosed in your comment submission. The NRC will post all comment submissions at *https://www.regulations.gov* as well as enter the comment submissions into ADAMS. The NRC does not routinely edit comment submissions to remove identifying or contact information.

If you are requesting or aggregating comments from other persons for submission to the NRC, then you should inform those persons not to include identifying or contact information that they do not want to be publicly disclosed in their comment submission. Your request should state that the NRC does not routinely edit comment submissions to remove such information before making the comment submissions available to the public or entering the comment into ADAMS.

II. Notice of Consideration of Issuance of Amendments to Facility Operating Licenses and Combined Licenses and Proposed No Significant Hazards Consideration Determination

For the facility-specific amendment requests shown in this document, the Commission finds that the licensees' analyses provided, consistent with section 50.91 of title 10 of *the Code of Federal Regulations* (10 CFR), ''Notice for public comment; State consultation,'' are sufficient to support the proposed determinations that these amendment requests involve NSHC. Under the Commission's regulations in 10 CFR 50.92, ''Issuance of amendment,'' operation of the facilities in accordance with the proposed amendments would not (1) involve a significant increase in the probability or consequences of an accident previously evaluated; or (2) create the possibility of a new or different kind of accident from any accident previously evaluated; or (3) involve a significant reduction in a margin of safety.

The Commission is seeking public comments on these proposed determinations. Any comments received within 30 days after the date of publication of this notice will be considered in making any final determinations.

Normally, the Commission will not issue the amendments until the expiration of 60 days after the date of publication of this notice. The Commission may issue any of these license amendments before expiration of the 60-day period provided that its final determination is that the amendment involves NSHC. In addition, the Commission may issue any of these amendments prior to the expiration of the 30-day comment period if circumstances change during the 30-day comment period such that failure to act in a timely way would result, for example in derating or shutdown of the facility. If the Commission takes action on any of these amendments prior to the expiration of either the comment period or the notice period, it will publish in the **Federal Register** a notice of issuance. If the Commission makes a final NSHC determination for any of these amendments, any hearing will take place after issuance. The Commission expects that the need to take action on any amendment before 60 days have elapsed will occur very infrequently.

A. Opportunity To Request a Hearing and Petition for Leave To Intervene

Within 60 days after the date of publication of this notice, any persons (petitioner) whose interest may be affected by any of these actions may file a request for a hearing and petition for leave to intervene (petition) with respect to that action. Petitions shall be filed in accordance with the Commission's ''Agency Rules of Practice and Procedure'' in 10 CFR part 2. Interested persons should consult a current copy of 10 CFR 2.309. The NRC's regulations are accessible electronically from the NRC Library on the NRC's website at *https://www.nrc.gov/reading-rm/doc-collections/cfr/.* If a petition is filed, the Commission or a presiding officer will rule on the petition and, if appropriate, a notice of a hearing will be issued.

As required by 10 CFR 2.309(d) the petition should specifically explain the reasons why intervention should be permitted with particular reference to the following general requirements for standing: (1) The name, address, and telephone number of the petitioner; (2) the nature of the petitioner's right to be made a party to the proceeding; (3) the nature and extent of the petitioner's property, financial, or other interest in the proceeding; and (4) the possible effect of any decision or order which may be entered in the proceeding on the petitioner's interest.

In accordance with 10 CFR 2.309(f), the petition must also set forth the specific contentions that the petitioner seeks to have litigated in the proceeding. Each contention must consist of a specific statement of the issue of law or fact to be raised or controverted. In addition, the petitioner must provide a brief explanation of the bases for the contention and a concise statement of the alleged facts or expert opinion that support the contention and on which the petitioner intends to rely in proving the contention at the hearing. The petitioner must also provide references to the specific sources and documents on which the petitioner intends to rely to support its position on the issue. The petition must include sufficient information to show that a genuine dispute exists with the applicant or licensee on a material issue of law or fact. Contentions must be limited to matters within the scope of

the proceeding. The contention must be one that, if proven, would entitle the petitioner to relief. A petitioner who fails to satisfy the requirements at 10 CFR 2.309(f) with respect to at least one contention will not be permitted to participate as a party.

Those permitted to intervene become parties to the proceeding, subject to any limitations in the order granting leave to intervene. Parties have the opportunity to participate fully in the conduct of the hearing with respect to resolution of that party's admitted contentions, including the opportunity to present evidence, consistent with the NRC's regulations, policies, and procedures.

Petitions must be filed no later than 60 days from the date of publication of this notice. Petitions and motions for leave to file new or amended contentions that are filed after the deadline will not be entertained absent a determination by the presiding officer that the filing demonstrates good cause by satisfying the three factors in 10 CFR 2.309(c)(1)(i) through (iii). The petition must be filed in accordance with the filing instructions in the ''Electronic Submissions (E-Filing)'' section of this document.

If a hearing is requested, and the Commission has not made a final determination on the issue of NSHC, the Commission will make a final determination on the issue of NSHC. The final determination will serve to establish when the hearing is held. If the final determination is that the amendment request involves NSHC, the Commission may issue the amendment and make it immediately effective, notwithstanding the request for a hearing. Any hearing would take place after issuance of the amendment. If the final determination is that the amendment request involves a significant hazards consideration, then any hearing held would take place before the issuance of the amendment unless the Commission finds an imminent danger to the health or safety of the public, in which case it will issue an appropriate order or rule under 10 CFR part 2.

A State, local governmental body, Federally recognized Indian Tribe, or agency thereof, may submit a petition to the Commission to participate as a party under 10 CFR 2.309(h)(1). The petition should state the nature and extent of the petitioner's interest in the proceeding. The petition should be submitted to the Commission no later than 60 days from the date of publication of this notice. The petition must be filed in accordance with the filing instructions in the ''Electronic Submissions (E-Filing)'' section of this document, and should meet the requirements for petitions set forth in this section, except that under 10 CFR 2.309(h)(2) a State, local governmental body, or Federally recognized Indian Tribe, or agency thereof does not need to address the standing requirements in 10 CFR 2.309(d) if the facility is located within its boundaries. Alternatively, a State, local governmental body, Federally recognized Indian Tribe, or agency thereof may participate as a non-party under 10 CFR 2.315(c).

If a petition is submitted, any person who is not a party to the proceeding and is not affiliated with or represented by a party may, at the discretion of the presiding officer, be permitted to make a limited appearance pursuant to the provisions of 10 CFR 2.315(a). A person making a limited appearance may make an oral or written statement of his or her position on the issues but may not otherwise participate in the proceeding. A limited appearance may be made at any session of the hearing or at any prehearing conference, subject to the limits and conditions as may be imposed by the presiding officer. Details regarding the opportunity to make a limited appearance will be provided by the presiding officer if such sessions are scheduled.

B. Electronic Submissions (E-Filing)

All documents filed in NRC adjudicatory proceedings including documents filed by an interested State, local governmental body, Federally recognized Indian Tribe, or designated agency thereof that requests to participate under 10 CFR 2.315(c), must be filed in accordance with 10 CFR 2.302. The E-Filing process requires participants to submit and serve all adjudicatory documents over the internet, or in some cases, to mail copies on electronic storage media, unless an exemption permitting an alternative filing method, as further discussed, is granted. Detailed guidance on electronic submissions is located in the Guidance for Electronic Submissions to the NRC (ADAMS Accession No. ML13031A056) and on the NRC website at *https://www.nrc.gov/site-help/e-submittals.html.*

To comply with the procedural requirements of E-Filing, at least 10 days prior to the filing deadline, the participant should contact the Office of the Secretary by email at *hearing.docket@nrc.gov*, or by telephone at 301–415–1677, to (1) request a digital identification (ID) certificate, which allows the participant (or its counsel or representative) to digitally sign submissions and access the E-Filing system for any proceeding in which it is participating; and (2) advise the Secretary that the participant will be submitting a petition or other adjudicatory document (even in instances in which the participant, or its counsel or representative, already holds an NRC-issued digital ID certificate). Based upon this information, the Secretary will establish an electronic docket for the proceeding if the Secretary has not already established an electronic docket.

Information about applying for a digital ID certificate is available on the NRC's public website at *https://www.nrc.gov/site-help/e-submittals/getting-started.html.* After a digital ID certificate is obtained and a docket created, the participant must submit adjudicatory documents in Portable Document Format. Guidance on submissions is available on the NRC's public website at *https://www.nrc.gov/site-help/electronic-sub-ref-mat.html.* A filing is considered complete at the time the document is submitted through the NRC's E-Filing system. To be timely, an electronic filing must be submitted to the E-Filing system no later than 11:59 p.m. (ET) on the due date. Upon receipt of a transmission, the E-Filing system timestamps the document and sends the submitter an email confirming receipt of the document. The E-Filing system also distributes an email that provides access to the document to the NRC's Office of the General Counsel and any others who have advised the Office of the Secretary that they wish to participate in the proceeding, so that the filer need not serve the document on those participants separately. Therefore, applicants and other participants (or their counsel or representative) must apply for and receive a digital ID certificate before adjudicatory documents are filed to obtain access to the documents via the E-Filing system.

A person filing electronically using the NRC's adjudicatory E-Filing system may seek assistance by contacting the NRC's Electronic Filing Help Desk through the ''Contact Us'' link located on the NRC's public website at *https://www.nrc.gov/site-help/e-submittals.html,* by email to *MSHD.Resource@nrc.gov,* or by a toll-free call at 1–866–672–7640. The NRC Electronic Filing Help Desk is available between 9 a.m. and 6 p.m., (ET), Monday through Friday, excluding government holidays.

Participants who believe that they have good cause for not submitting documents electronically must file an exemption request, in accordance with 10 CFR 2.302(g), with their initial paper filing stating why there is good cause for not filing electronically and requesting

authorization to continue to submit documents in paper format. Such filings must be submitted in accordance with 10 CFR 2.302(b)–(d). Participants filing adjudicatory documents in this manner are responsible for serving their documents on all other participants. Participants granted an exemption under 10 CFR 2.302(g)(2) must still meet the electronic formatting requirement in 10 CFR 2.302(g)(1), unless the participant also seeks and is granted an exemption from 10 CFR 2.302(g)(1).

Documents submitted in adjudicatory proceedings will appear in the NRC's electronic hearing docket, which is publicly available at *https://adams.nrc.gov/ehd,* unless excluded pursuant to an order of the presiding officer. If you do not have an NRC-issued digital ID certificate as previously described, click ''cancel'' when the link requests certificates and you will be automatically directed to the NRC's electronic hearing dockets where you will be able to access any publicly available documents in a particular hearing docket. Participants are requested not to include personal privacy information such as social security numbers, home addresses, or personal phone numbers in their filings unless an NRC regulation or other law requires submission of such information. With respect to copyrighted works, except for limited excerpts that serve the purpose of the adjudicatory filings and would constitute a Fair Use application, participants should not include copyrighted materials in their submission.

The following table provides the plant name, docket number, date of application, ADAMS accession number, and location in the application of the licensees' proposed NSHC determinations. For further details with respect to these license amendment applications, see the applications for amendment, which are available for public inspection in ADAMS. For additional direction on accessing information related to this document, see the ''Obtaining Information and Submitting Comments'' section of this document.

LICENSE AMENDMENT REQUEST(S)

Duke Energy Carolinas, LLC; Oconee Nuclear Station, Units 1, 2, and 3; Oconee County, SC	
Docket No(s)	50–269, 50–270, 50–287.
Application date	September 2, 2021.
ADAMS Accession No	ML21245A210.
Location in Application of NSHC	Pages 11–13 of Enclosure.
Brief Description of Amendment(s)	The proposed amendment would revise Technical Specification 3.7.7, ''Low Pressure Service Water (LPSW) System'' to extend the Completion Time related to Condition A and Required Action A.1 for a temporary basis to 288 hours during the Oconee Nuclear Station, Unit 2, Refuel 31.
Proposed Determination	NSHC.
Name of Attorney for Licensee, Mailing Address	Tracey Mitchell LeRoy, Deputy General Counsel, Duke Energy Corporation, 550 South Tryon Street, Mail Code DEC45A, Charlotte, NC 28202.
NRC Project Manager, Telephone Number	Stephanie Devlin-Gill, 301–415–5301.

Exelon FitzPatrick, LLC and Exelon Generation Company, LLC; James A. FitzPatrick Nuclear Power Plant; Oswego County, NY	
Docket No(s)	50–333.
Application date	May 14, 2021.
ADAMS Accession No	ML21134A211.
Location in Application of NSHC	Pages 4–5 of the Enclosure.
Brief Description of Amendment(s)	The proposed change requests adoption of TSTF–264–A, Revision 0, ''3.3.9 and 3.3.10-Delete Flux Monitors Specific Overlap Requirement SR [Surveillance Requirements].'' Specifically, the proposed change revises Technical Specification 3.3.1.1, ''RPS Instrumentation,'' by deleting Surveillance Requirements 3.3.1.1.5 and 3.3.1.1.6, which verify the overlap between the source range monitor and the intermediate range monitor, and between the intermediate range monitor and the average power range monitor. The surveillance functions will still be performed by the associated CHANNEL CHECK in Surveillance Requirement 3.3.1.1.1.
Proposed Determination	NSHC.
Name of Attorney for Licensee, Mailing Address	Donald P. Ferraro, Assistant General Counsel, Exelon Generation Company, LLC, 200 Exelon Way, Suite 305, Kennett Square, PA 19348.
NRC Project Manager, Telephone Number	Justin Poole, 301–415–2048.

Exelon Generation Company, LLC; Braidwood Station, Units 1 and 2; Will County, IL	
Docket No(s)	50–456, 50–457.
Application date	August 2, 2021.
ADAMS Accession No	ML21214A331.
Location in Application of NSHC	Pages 20–22 of Attachment 1.
Brief Description of Amendment(s)	The proposed amendment revises Technical Specification (TS) 3.7.9, ''Ultimate Heat Sink [UHS]'' for an inoperable UHS due to the average water temperature to allow utilization of existing margin in the design analysis to offset the increase in the TS UHS temperature. The proposed amendment also revises TS 3.7.9 Surveillance Requirement 3.7.9.2 to delete the temporary allowance for the UHS average water temperature of 102.8 °F until September 30, 2021.
Proposed Determination	NSHC.
Name of Attorney for Licensee, Mailing Address	Tamra Domeyer, Associate General Counsel, Exelon Generation Company, LLC, 4300 Winfield Road, Warrenville, IL 60555.
NRC Project Manager, Telephone Number	Joel Wiebe, 301–415–6606.

LICENSE AMENDMENT REQUEST(S)—Continued

Exelon Generation Company, LLC; Calvert Cliffs Nuclear Power Plant, Units 1 and 2; Calvert County, MD	
Docket No(s)	50–317, 50–318.
Application date	June 14, 2021, as supplemented by letter dated August 13, 2021.
ADAMS Accession No	ML21165A406, ML21225A353.
Location in Application of NSHC	Pages 19–22 of Attachment 1 of the Supplement.
Brief Description of Amendment(s)	The proposed amendment would revise the current licensing basis in the updated Final Safety Analysis Report and the Technical Requirements Manual for Calvert Cliffs Nuclear Power Plant, Units 1 and 2, to allow for a full core offload without the availability of supplementing the spent fuel pool cooling system with one loop of the shutdown cooling system during certain refueling outages. The proposed amendment also includes a change in the calculational methodology used in the spent fuel pool heat-up analysis.
Proposed Determination	NSHC.
Name of Attorney for Licensee, Mailing Address	Tamra Domeyer, Associate General Counsel, Exelon Generation Company, LLC, 4300 Winfield Road, Warrenville, IL 60555.
NRC Project Manager, Telephone Number	Andrea Mayer, 301–415–1081.
Southern Nuclear Operating Company, Inc.; Joseph M. Farley Nuclear Plant, Units 1 and 2; Houston County, AL; Southern Nuclear Operating Company, Inc.; Vogtle Electric Generating Plant, Units 1 and 2; Burke County, GA	
Docket No(s)	50–348, 50–364, 50–424, 50–425.
Application date	September 17, 2021.
ADAMS Accession No	ML21263A223.
Location in Application of NSHC	Pages E–3—E–4 of Enclosure.
Brief Description of Amendment(s)	The proposed amendments would revise the Technical Specifications to adopt Technical Specifications Task Force (TSTF) Traveler TSTF 577, ''Revised Frequencies for Steam Generator Tube Inspections.''
Proposed Determination	NSHC.
Name of Attorney for Licensee, Mailing Address	Millicent Ronnlund, Vice President and General Counsel, Southern Nuclear Operating Co., Inc., P.O. Box 1295, Birmingham, AL 35201–1295.
NRC Project Manager, Telephone Number	John Lamb, 301–415–3100.
Susquehanna Nuclear, LLC and Allegheny Electric Cooperative, Inc.; Susquehanna Steam Electric Station, Units 1 and 2; Luzerne County, PA	
Docket No(s)	50–387, 50–388.
Application date	April 8, 2021.
ADAMS Accession No	ML21098A206.
Location in Application of NSHC	Pages 14–16 of Attachment 1.
Brief Description of Amendment(s)	The amendments would change various technical specifications (TSs) to permit the use of risk-informed completion times in accordance with Technical Specifications Task Force (TSTF) Traveler TSTF–505, Revision 2, ''Provide Risk-Informed Extended Completion Times, RITSTF [Risk-Informed TSTF] Initiative 4b,'' dated July 2, 2018 (ADAMS Accession No. ML18183A493). The licensee also proposed variations from TSTF–505, Revision 2 and TS changes not associated with TSTF–505, Revision 2.
Proposed Determination	NSHC.
Name of Attorney for Licensee, Mailing Address	Damon D. Obie, Esq, 835 Hamilton St., Suite 150, Allentown, PA 18101.
NRC Project Manager, Telephone Number	Audrey Klett, 301–415–0489.
TMI–2 Solutions, LLC; Three Mile Island Unit 2; Londonderry Township, Dauphin County, PA	
Docket No(s)	50–320.
Application date	October 5, 2021.
ADAMS Accession No	ML21279A278.
Location in Application of NSHC	Pages 6–7 of Attachment 1.
Brief Description of Amendment(s)	This is a proposed change to revise the Document List contained in the License Technical Specifications at paragraph 6.9.2 to reflect a proposed exemption to record keeping requirements for the TMI–2 reactor site.
Proposed Determination	NSHC.
Name of Attorney for Licensee, Mailing Address	Russ Workman, General Counsel, Energy Solutions, 299 South Main Street, Suite 1700, Salt Lake City, UT 84111.
NRC Project Manager, Telephone Number	Theodore Smith, 301–415–6721.
Virginia Electric and Power Company, Dominion Nuclear Company; North Anna Power Station, Units 1 and 2; Louisa County, VA	
Docket No(s)	50–338, 50–339.
Application date	September 9, 2021.
ADAMS Accession No	ML21252A514.
Location in Application of NSHC	Pages 2–4 of Enclosure.
Brief Description of Amendment(s)	The proposed change would revise Technical Specification (TS) 5.6.7, ''Steam Generator (SG) Program,'' and TS 5.5.8, ''Steam Generator Tube Inspection Report,'' in accordance with TSTF–577, Revision 1, ''Revised Frequencies for Steam Generator Tube Inspections.''
Proposed Determination	NSHC.
Name of Attorney for Licensee, Mailing Address	W.S. Blair, Senior Counsel, Dominion Resource Services, Inc., 120 Tredegar St., RS–2, Richmond, VA 23219.

LICENSE AMENDMENT REQUEST(S)—Continued

NRC Project Manager, Telephone Number	G. Ed Miller, 301–415–2481.
Vistra Operations Company LLC; Comanche Peak Nuclear Power Plant, Units 1 and 2; Somervell County, TX	
Docket No(s)	50–445, 50–446.
Application date	July 27, 2021, as supplemented by letter(s) dated August 31, 2021.
ADAMS Accession No	ML21208A023, ML21243A232.
Location in Application of NSHC	Pages 3–5 of Enclosure 2 of the Supplement.
Brief Description of Amendment(s)	The amendments would adopt Technical Specifications Task Force (TSTF) Traveler TSTF–577, Revision 1, ''Revised Frequencies for Steam Generator Tube Inspections.'' The amendments would modify the technical specification requirements related to steam generator tube inspections and reporting based on operating history.
Proposed Determination	NSHC.
Name of Attorney for Licensee, Mailing Address	Timothy P. Matthews, Esq., Morgan, Lewis and Bockius, 1111 Pennsylvania Avenue NW, Washington, DC 20004.
NRC Project Manager, Telephone Number	Dennis Galvin, 301–415–6256.
Wolf Creek Nuclear Operating Corporation; Wolf Creek Generating Station, Unit 1; Coffey County, KS	
Docket No(s)	50–482.
Application date	September 29, 2021.
ADAMS Accession No	ML21272A283.
Location in Application of NSHC	Pages 13–14 of Attachment I.
Brief Description of Amendment(s)	The proposed changes would modify Technical Specification 3.3.2, ''Engineered Safety Feature Actuation System (ESFAS) Instrumentation,'' Condition N, to provide allowable restoration time and avoid a potential unplanned plant shutdown should a condition occur requiring ESFAS corrective maintenance.
Proposed Determination	NSHC.
Name of Attorney for Licensee, Mailing Address	Thomas C. Poindexter, Morgan, Lewis and Bockius LLP, 1111 Pennsylvania Avenue NW, Washington, DC 20004–2541.
NRC Project Manager, Telephone Number	Samson Lee, 301–415–3168.

III. Notice of Issuance of Amendments to Facility Operating Licenses and Combined Licenses

During the period since publication of the last monthly notice, the Commission has issued the following amendments. The Commission has determined for each of these amendments that the application complies with the standards and requirements of the Atomic Energy Act of 1954, as amended (the Act), and the Commission's rules and regulations. The Commission has made appropriate findings as required by the Act and the Commission's rules and regulations in 10 CFR chapter I, which are set forth in the license amendment.

A notice of consideration of issuance of amendment to facility operating license or combined license, as applicable, proposed NSHC determination, and opportunity for a hearing in connection with these actions, was published in the **Federal Register** as indicated in the safety evaluation for each amendment.

Unless otherwise indicated, the Commission has determined that these amendments satisfy the criteria for categorical exclusion in accordance with 10 CFR 51.22. Therefore, pursuant to 10 CFR 51.22(b), no environmental impact statement or environmental assessment need be prepared for these amendments. If the Commission has prepared an environmental assessment under the special circumstances provision in 10 CFR 51.22(b) and has made a determination based on that assessment, it is so indicated in the safety evaluation for the amendment.

For further details with respect to each action, see the amendment and associated documents such as the Commission's letter and safety evaluation, which may be obtained using the ADAMS accession numbers indicated in the following table. The safety evaluation will provide the ADAMS accession numbers for the application for amendment and the **Federal Register** citation for any environmental assessment. All of these items can be accessed as described in the ''Obtaining Information and Submitting Comments'' section of this document.

LICENSE AMENDMENT ISSUANCE(S)

Dominion Energy Nuclear Connecticut, Inc.; Millstone Power Station, Unit No. 3; New London County, CT	
Docket No(s)	50–423.
Amendment Date	October 5, 2021.
ADAMS Accession No	ML21227A000.
Amendment No(s)	279.
Brief Description of Amendment(s)	The amendment revised the Millstone 3 Technical Specification 6.9.1.6.b by adding topical report WCAP–16996–P–A, Revision 1, ''Realistic LOCA [loss-of-coolant accident] Evaluation Methodology Applied to the Full Spectrum of Break Sizes (Full Spectrum LOCA Methodology),'' to the list of methodologies approved for reference in the Core Operating Limits Report (COLR) for Millstone 3. The added reference identifies the analytical method used to determine the core operating limits for the large break LOCA event described in the Millstone 3 Final Safety Analysis Report, Section 15.6.5, ''Loss-of-Coolant Accidents Resulting from a Spectrum of Postulated Piping Breaks within the Reactor Coolant Pressure Boundary.'' The amendment also removed COLR Reference WCAP–12945–P–A, which is no longer being used to support the Millstone 3 core reload analysis.

LICENSE AMENDMENT ISSUANCE(S)—Continued

Public Comments Received as to Proposed NSHC (Yes/No).	No.
Energy Harbor Nuclear Corp. and Energy Harbor Nuclear Generation LLC; Beaver Valley Power Station, Unit No. 2; Beaver County, PA	
Docket No(s)	50–412.
Amendment Date	June 30, 2021.
ADAMS Accession No	ML21153A176.
Amendment No(s)	201.
Brief Description of Amendment(s)	The amendment revised the technical specification (TS) requirements related to methods of inspection and service life for Alloy 800 steam generator tubesheet sleeves. The proposed TS changes also removed a note about sleeve inspection that would no longer be applicable.
Public Comments Received as to Proposed NSHC (Yes/No).	No.
Entergy Operations, Inc.; Arkansas Nuclear One, Unit 2; Pope County, AR	
Docket No(s)	50–368.
Amendment Date	September 20, 2021.
ADAMS Accession No	ML21208A449.
Amendment No(s)	325.
Brief Description of Amendment(s)	The amendment modified the Loss of Voltage relay allowable values contained in Arkansas Nuclear One, Unit 2 (ANO–2) Technical Specification (TS) 3.3.2.1, ''Engineered Safety Feature Actuation System Instrumentation,'' specifically Table 3.3–4, Functional Unit 7.a, ''4.16 kv [kilovolt] Emergency Bus Undervoltage.'' The amendment also corrected an error in Table 3.3–3 of ANO–2 TS 3.3.2.1.
Public Comments Received as to Proposed NSHC (Yes/No).	No.
Entergy Operations, Inc.; Waterford Steam Electric Station, Unit 3; St. Charles Parish, LA	
Docket No(s)	50–382.
Amendment Date	September 15, 2021.
ADAMS Accession No	ML21166A183.
Amendment No(s)	261.
Brief Description of Amendment(s)	This amendment relocated the Waterford Steam Electric Station, Unit 3 (Waterford 3) boration systems technical specification (TS) equipment that is required to support the operability of the auxiliary pressurizer spray system from TSs 3.1.2.2, 3.1.2.4, 3.1.2.6 and 3.1.2.8 to Waterford 3 TS 3/4.4.3.2, ''Auxiliary Spray,'' and relocated the remaining information from these TSs, as well as the remaining boration systems in TSs 3.1.2.1, 3.1.2.3, 3.1.2.5 and 3.1.2.7 to the licensee-controlled Technical Requirements Manual.
Public Comments Received as to Proposed NSHC (Yes/No).	No.
Exelon Generation Company, LLC; LaSalle County Station, Unit Nos. 1 and 2; LaSalle County, IL	
Docket No(s)	50–373, 50–374.
Amendment Date	September 7, 2021.
ADAMS Accession No	ML21162A069.
Amendment No(s)	251 (Unit 1) and 237 (Unit 2).
Brief Description of Amendment(s)	The amendments modified technical specification requirements to permit the use of risk-informed completion times in accordance with Technical Specifications Task Force (TSTF) Traveler TSTF–505, Revision 2, ''Provide Risk-Informed Extended Completion Times—RITSTF Initiative 4b.''
Public Comments Received as to Proposed NSHC (Yes/No).	No.
Exelon Generation Company, LLC; Limerick Generating Station, Units 1 and 2; Montgomery County, PA	
Docket No(s)	50–352, 50–353.
Amendment Date	September 28, 2021.
ADAMS Accession No	ML21181A044.
Amendment No(s)	253 (Unit 1), 215 (Unit 2).
Brief Description of Amendment(s)	The amendments revised Technical Specification Section 1.0, ''DEFINITIONS''; Section 3/4.4.6, ''PRESSURE/TEMPERATURE LIMITS''; and Section 6.0, ''ADMINISTRATIVE CONTROLS''; by replacing the existing reactor vessel heatup and cooldown rate limits and the pressure and temperature limit curves with references to the pressure and temperature limits report.
Public Comments Received as to Proposed NSHC (Yes/No).	No.
NextEra Energy Seabrook, LLC; Seabrook Station, Unit No. 1; Rockingham County, NH	
Docket No(s)	50–443.
Amendment Date	September 22, 2021.

LICENSE AMENDMENT ISSUANCE(S)—Continued

ADAMS Accession No	ML21190A177.
Amendment No(s)	169.
Brief Description of Amendment(s)	The amendment revised the technical specifications in order to resolve non-conservative requirements associated with nuclear heat flux hot channel factor, as reported in Westinghouse Nuclear Safety Advisory Letter (NSAL) 09–5, Revision 1, and NSAL 15–1.
Public Comments Received as to Proposed NSHC (Yes/No).	No.

PSEG Nuclear LLC; Salem Nuclear Generating Station, Unit No. 1; Salem County, NJ

Docket No(s)	50–272.
Amendment Date	October 8, 2021.
ADAMS Accession No	ML21230A018.
Amendment No(s)	339.
Brief Description of Amendment(s)	The amendment revised the reactor coolant system pressure-temperature limits and the pressurizer overpressure protection system limits and relocated them to a Pressure and Temperature Limits Report.
Public Comments Received as to Proposed NSHC (Yes/No).	No.

Southern Nuclear Operating Company, Inc.; Edwin I. Hatch Nuclear Plant, Units 1 and 2; Appling County, GA; Southern Nuclear Operating Company, Inc.; Joseph M. Farley Nuclear Plant, Units 1 and 2; Houston County, AL; Southern Nuclear Operating Company, Inc.; Vogtle Electric Generating Plant, Units 1 and 2; Burke County, GA

Docket No(s)	50–321, 50–348, 50–364, 50–366, 50–424, 50–425.
Amendment Date	September 29, 2021.
ADAMS Accession No	ML21232A149.
Amendment No(s)	Farley 236 (Unit 1) and 233 (Unit 2), Hatch 312 (Unit 1) and 257 (Unit 2); Vogtle 208 (Unit 1) and 191 (Unit 2).
Brief Description of Amendment(s)	The amendments removed the table of contents from the Edwin I. Hatch Nuclear Plant Units 1 and 2 (Hatch Units 1 and 2); Joseph M. Farley Nuclear Plant, Units 1 and 2; and Vogtle Electric Generating Plant, Units 1 and 2, Technical Specifications (TSs), as well as removed the effective page list from the Hatch, Units 1 and 2, TSs, and placed them under licensee control.
Public Comments Received as to Proposed NSHC (Yes/No).	No.

Southern Nuclear Operating Company, Inc.; Edwin I. Hatch Nuclear Plant, Units 1 and 2; Appling County, GA; Southern Nuclear Operating Company, Inc.; Joseph M. Farley Nuclear Plant, Units 1 and 2; Houston County, AL; Southern Nuclear Operating Company, Inc.; Vogtle Electric Generating Plant, Units 1 and 2; Burke County, GA

Docket No(s)	50–321, 50–348, 50–364, 50–366, 50–424, 50–425.
Amendment Date	September 21, 2021.
ADAMS Accession No	ML21217A091.
Amendment No(s)	Farley 235 (Unit 1) and 232 (Unit 2), Hatch 310 (Unit 1) and 256 (Unit 2), Vogtle 207 (Unit 1) and 190 (Unit 2).
Brief Description of Amendment(s)	The amendments revised the Southern Nuclear Operating Company Standard Emergency Plan, including the Site Annexes, to change the emergency response organization staffing composition and extend staff augmentation times from 75 to 90 minutes.
Public Comments Received as to Proposed NSHC (Yes/No).	No.

Southern Nuclear Operating Company, Inc.; Vogtle Electric Generating Plant, Unit 3; Burke County, GA; Southern Nuclear Operating Company, Inc.; Vogtle Electric Generating Plant, Unit 4; Burke County, GA

Docket No(s)	52–025, 52–026.
Amendment Date	September 17, 2021.
ADAMS Accession No	ML21217A021 (Package).
Amendment No(s)	187 (Unit 3) and 185 (Unit 4).
Brief Description of Amendment(s)	The amendments revised the Southern Nuclear Operating Company's Standard Emergency Plan, including site annexes, to change the emergency response organization staffing composition and extend staff augmentation time from 75 to 90 minutes.
Public Comments Received as to Proposed NSHC (Yes/No).	No.

Tennessee Valley Authority; Watts Bar Nuclear Plant, Units 1 and 2; Rhea County, TN

Docket No(s)	50–390, 50–391.
Amendment Date	September 17, 2021.
ADAMS Accession No	ML21158A284.
Amendment No(s)	148 (Unit 1) and 55 (Unit 2).

LICENSE AMENDMENT ISSUANCE(S)—Continued

Brief Description of Amendment(s)	The amendments revised Watts Bar Nuclear Plant, Units 1 and 2, Technical Specification (TS) 3.3.2, ''ESFAS Instrumentation,'' Table 3.3.2–1, ''Engineered Safety Feature Actuation System Instrumentation,'' Function 6.e, ''Auxiliary Feedwater—Trip of all Turbine Driven Main Feedwater Pumps,'' to include the electric motor-driven standby main feedwater pump (SBMFW) trip channel for the auxiliary feedwater auto-start logic and added a new surveillance requirement to verify the status of the SBMFW pump trip channel when a turbine-driven main feedwater pump is in service.
Public Comments Received as to Proposed NSHC (Yes/No).	No.
Virginia Electric and Power Company; Surry Power Station, Units 1 and 2; Surry County, VA	
Docket No(s)	50–280, 50–281.
Amendment Date	August 20, 2021.
ADAMS Accession No	ML21175A185.
Amendment No(s)	304 (Unit 1) and 304 (Unit 2).
Brief Description of Amendment(s)	The amendments permitted the application of the leak-before-break methodology to the auxiliary piping systems attached to the reactor coolant system for Surry Units 1 and 2 to eliminate the dynamic effects of postulated pipe ruptures.
Public Comments Received as to Proposed NSHC (Yes/No).	No.

IV. Notice of Issuance of Amendments to Facility Operating Licenses and Combined Licenses and Final Determination of No Significant Hazards Consideration and Opportunity for a Hearing (Exigent Circumstances or Emergency Situation)

Since publication of the last monthly notice, the Commission has issued the following amendment. The Commission has determined for this amendment that the application for the amendment complies with the standards and requirements of the Atomic Energy Act of 1954, as amended (the Act), and the Commission's rules and regulations. The Commission has made appropriate findings as required by the Act and the Commission's rules and regulations in 10 CFR chapter I, which are set forth in the license amendment.

Because of exigent circumstances or emergency situation associated with the date the amendment was needed, there was not time for the Commission to publish, for public comment before issuance, its usual notice of consideration of issuance of amendment, proposed NSHC determination, and opportunity for a hearing.

For exigent circumstances, the Commission has either issued a **Federal Register** notice providing opportunity for public comment or has used local media to provide notice to the public in the area surrounding a licensee's facility of the licensee's application and of the Commission's proposed determination of NSHC. The Commission has provided a reasonable opportunity for the public to comment, using its best efforts to make available to the public means of communication for the public to respond quickly, and in the case of telephone comments, the comments have been recorded or transcribed as appropriate and the licensee has been informed of the public comments.

In circumstances where failure to act in a timely way would have resulted, for example, in derating or shutdown of a nuclear power plant or in prevention of either resumption of operation or of increase in power output up to the plant's licensed power level, the Commission may not have had an opportunity to provide for public comment on its NSHC determination. In such case, the license amendment has been issued without opportunity for comment prior to issuance. If there has been some time for public comment but less than 30 days, the Commission may provide an opportunity for public comment. If comments have been requested, it is so stated. In either event, the State has been consulted by telephone whenever possible.

Under its regulations, the Commission may issue and make an amendment immediately effective, notwithstanding the pendency before it of a request for a hearing from any person, in advance of the holding and completion of any required hearing, where it has determined that NSHC is involved.

The Commission has applied the standards of 10 CFR 50.92 and has made a final determination that the amendments involve NSHC. The basis for this determination is contained in the documents related to each action. Accordingly, the amendment has been issued and made effective as indicated. For those amendments that have not been previously noticed in the **Federal Register**, within 60 days after the date of publication of this notice, any persons (petitioner) whose interest may be affected by this action may file a request for a hearing and petition for leave to intervene (petition) with respect to the action. Petitions shall be filed in accordance with the guidance concerning the Commission's ''Agency Rules of Practice and Procedure'' in 10 CFR part 2 as discussed in section II.A of this document.

Unless otherwise indicated, the Commission has determined that the amendment satisfies the criteria for categorical exclusion in accordance with 10 CFR 51.22. Therefore, pursuant to 10 CFR 51.22(b), no environmental impact statement or environmental assessment need be prepared for this amendment. If the Commission has prepared an environmental assessment under the special circumstances provision in 10 CFR 51.12(b) and has made a determination based on that assessment, it is so indicated in the safety evaluation for the amendment.

For further details with respect to these actions, see the amendment and associated documents such as the Commission's letter and safety evaluation, which may be obtained using the ADAMS accession numbers indicated in the following table. The safety evaluation will provide the ADAMS accession number(s) for the application for amendment and the **Federal Register** citation for any environmental assessment. All of these items can be accessed as described in the ''Obtaining Information and Submitting Comments'' section of this document.

LICENSE AMENDMENT ISSUANCE(S)—EXIGENT/EMERGENCY CIRCUMSTANCES

Southern Nuclear Operating Company, Inc.; Edwin I. Hatch Nuclear Plant, Unit 1; Appling County, GA

Docket No(s)	50–321.
Amendment Date	September 24, 2021.
ADAMS Accession No	ML21264A644.
Amendment No(s)	311.
Brief Description of Amendment(s)	The amendment revises Technical Specification (TS) 3.7.2, ''Plant Service Water (PSW) System and Ultimate Heat Sink (UHS),'' Condition A, ''One PSW pump inoperable,'' to allow a one-time increase in the Completion Time from 30 days to 45 days. The license amendment is issued under emergency circumstances as described in the provisions of paragraph 50.91(a)(5) of title 10 of the *Code of Federal Regulations* due to the time critical nature of the amendment.
Local Media Notice (Yes/No)	No.
Public Comments Requested as to Proposed NSHC (Yes/No)	No.

Dated: October 27, 2021.

For the Nuclear Regulatory Commission.

Bo M. Pham,

Director, Division of Operating Reactor Licensing, Office of Nuclear Reactor Regulation.

[FR Doc. 2021–23783 Filed 11–1–21; 8:45 am]

BILLING CODE 7590–01–P

POSTAL REGULATORY COMMISSION

Privacy Act of 1974; System of Records

AGENCY: Postal Regulatory Commission.

ACTION: Notice of a new system of records.

SUMMARY: The Postal Regulatory Commission (PRC) proposes to establish a new PRC system of records titled, ''Postal Regulatory Commission/PRC–03 Medical File System Records.'' PRC collects these records for a variety of purposes such as ensuring that records required to be retained on a long-term basis meet the mandates of law, Executive Order, or regulations (*e.g.,* the Department of Labor's Occupational Safety and Health Administration (OSHA) and OWCP regulations), to address accommodation requests, and for other medically-related purposes (*e.g.,* contact tracing of diseases, appropriate mitigation strategies, etc.).

DATES: This notice is effective upon publication, subject to a 30-day period in which to comment on the routine uses, described below. Please submit any comments by December 2, 2021.

ADDRESSES: Comments may be submitted to the Federal E-Rulemaking Portal electronically at *http://www.regulations.gov.* Comments can also be sent to the Office of the Secretary and Administration, Postal Regulatory Commission, 901 New York Ave. NW, Suite 200, Washington, DC 20268–0001, Attention: Revisions to Privacy Act Systems of Records. All comments received, including attachments and other supporting documents, are part of the public record and subject to public disclosure. All comments received will be posted without change to *http://www.regulations.gov,* including any personal information provided. You should submit only information that you wish to make publicly available.

FOR FURTHER INFORMATION CONTACT: For general and privacy questions, please contact: the Secretary, (202) 789–6800, *HR@prc.gov,* Postal Regulatory Commission, 901 New York Ave. NW, Suite 200, Washington, DC 20268–0001.

SUPPLEMENTARY INFORMATION: In accordance with the Privacy Act of 1974, the Postal Regulatory Commission (''PRC'') proposes to establish a new PRC system of records titled, ''Postal Regulatory Commission/PRC–03 Medical File System Records.'' PRC is publishing this system of records to provide notice to individuals regarding the collection, maintenance, use, and disclosure of medical records pertaining to PRC personnel (meaning employees and interns).

PRC is not seeking exemption from any Privacy Act provisions for this system of records.

In order to reduce the risk to individual privacy, PRC is minimizing the information it maintains. PRC will include this system in its inventory of record systems.

SYSTEM NAME AND NUMBER:

Postal Regulatory Commission/PRC–03 Medical File System Records.

SECURITY CLASSIFICATION:

Unclassified.

SYSTEM LOCATION:

The records are located at the PRC Headquarters in Washington, DC, and contractor-owned and operated facilities. Additionally, records may be maintained electronically at a PRC data center. Records within this system of records may be transferred to a PRC-authorized cloud service provider within the Continental United States.

SYSTEM MANAGER(S):

Secretary, Postal Regulatory Commission, *HR@prc.gov.*

AUTHORITY FOR MAINTENANCE OF THE SYSTEM:

39 U.S.C. 504(a); Executive Orders 12107 and 12196; Occupational Safety and Health Act (OSHA) of 1970, Public Law 91–596, Section 19(a) (29 U.S.C. 668(a)); Section 319 of the Public Health Service Act (42 U.S.C. 247d; American with Disabilities Act, including 42 U.S.C. 12112(d)(3)(B) (allowing medical examination after an offer of employment has been made to a job applicant), 29 CFR 602.14, 1630.2(r), 1630.14(b)(1), (c)(1), (d)(4); 29 U.S.C. 668, 29 CFR part 1904, 29 CFR 1910.1020, 29 CFR 1960.66; Executive Order No. 14043, Requiring Coronavirus Disease 2019 Vaccination for Federal Employees; Executive Order 13164, Establishing Procedures to Facilitate the Provision of Reasonable Accommodation; EEOC, Enforcement Guidance on Reasonable Accommodation and Undue Hardship Under the Americans with Disabilities Act, 29 CFR part 1615; Rehabilitation Act of 1973, 29 U.S.C. 12101 *et seq.;* 29 U.S.C. 971; 29 CFR 1630; Title VII of the Civil Rights Act, 42 U.S.C. 2000e.

PURPOSE(S) OF THE SYSTEM:

Records in this system of records are maintained for a variety of purposes, which include the following:

a. To ensure that records required to be retained on a long-term basis to meet the mandates of law, Executive Order, or regulations (*e.g.,* the Department of Labor's Occupational Safety and Health

Administration (OSHA) and OWCP regulations), are so maintained.

b. To provide a legal document describing the health care administered and any exposure incident.

c. To provide a method for evaluating quality of health care rendered and job-health-protection including engineering protection provided, protective equipment worn, workplace monitoring, and medical exam monitoring required by OSHA or by good practice.

d. To ensure that all relevant, necessary, accurate, and timely data are available to support any medically-related employment decisions affecting the subject of the records (*e.g.,* in connection with fitness-for-duty and disability retirement decisions).

e. To document claims filed with and the decisions reached by the Department of Labor's Office of Workers' Compensation Program (OWCP) and the individual's possible reemployment rights under statutes governing that program.

f. To document employees' reporting of on-the-job injuries or unhealthy or unsafe working conditions, including the reporting of such conditions to OSHA and actions taken by that agency or by the employing agency.

g. To facilitate communication among members of an on-site health and wellness program and to the individual employee participating in the program.

h. To collect records when the PRC determines that collection is necessary to protect the health of PRC personnel (meaning employees, and interns).

i. To maintain records necessary and relevant to PRC activities responding to and mitigating COVID–19, other high-consequence public health threats, or diseases and illnesses relating to a public health emergency.

j. To provide a method by which the PRC can identify PRC employees who have requested ''reasonable accommodations'' in their office, work stations, other PRC facilities, and/or to access other benefits and privileges of employment. Information on the disposition of each request to also be maintained in this system.

CATEGORIES OF INDIVIDUALS COVERED BY THE SYSTEM:

Current and former PRC personnel (meaning employees and interns).

CATEGORIES OF RECORDS IN THE SYSTEM:

Records maintained in this system include:

a. Medical records, forms, and reports completed or obtained when an individual applies for a Federal job and is subsequently employed.

b. Medical records, forms, and reports completed during employment as a condition of employment, either by the employing agency or by another agency, State or local government entity, or a private sector entity under contract to the employing agency.

c. Reports of on-the-job injuries and medical records, forms, and reports generated as a result of the filing of a claim for Workers' Compensation, whether the claim is accepted or not. The official compensation claim file is not covered by this system; rather, it is part OWCP system of records.

d. All other medical records, forms, and reports created on an employee during their period of employment, including any retained on a temporary basis (*e.g.,* those designated to be retained only during the period of service with a given agency) and those designated for long-term retention (*i.e.,* those retained for the entire duration of Federal service and for some period of time after).

e. Records resulting from participation in agency-sponsored health promotion and wellness activities, including health risk appraisals, biometric testing, health coaching, disease management, behavioral management, preventive services, fitness programs, and any other activities that could be considered part of a comprehensive worksite health and wellness program.

f. Health screening and contact tracing records, which may include identification and contact information (such as name, address, work or personal phone number(s), work or personal email address(es), work office/division, employee ID number, data watch information, medical reports, assessments, vaccination status, testing status (where and when it occurred; status of results), test type, test results, disease type, health status, approximate date of exposure, last date physically present in the PRC facility/at a PRC event, name of facility visited, areas of the PRC or other facility (if a PRC event at a non-PRC facility) traversed, areas and objects touched, workplace contacts, names of persons who had physical contact with or was in prolonged close physical proximity to infected/potentially infected persons, extended proximity event time and date, number of events, number of individuals in an event, number of individuals at location, dates and locations of domestic and international travel, and related information and documents collected for the purpose of screening and contact tracing;

g. Other individual information directly related and relevant to PRC activities responding to and mitigating a public health emergency;

h. The categories of records in this system include but are not limited to the information that current and former PRC personnel (meaning employees and interns) and applicants must provide by submitting a reasonable accommodation requests for medical and/or religious exceptions as required by law, as well as the underlying information necessary to evaluate and confirm the legal entitlement of the exception. This information may include the name and employment information of the employee needing an accommodation; requestor's name and contact information (if different than the employee who needs an accommodation); date request was initiated; information concerning the nature of the disability and the need for accommodation, including appropriate medical documentation; information concerning the nature of the sincerely held religious belief, practice, or observance and the need for accommodation, including any appropriate documentation; details of the accommodation request and disposition, such as: Type of accommodation requested, how the requested accommodation would assist in job performance, the sources of technical assistance consulted in trying to identify alternative reasonable accommodation, any additional information provided by the requestor related to the processing of the request; disposition of the request, whether the request was approved or denied; and notification(s) to the employee and his/her supervisor(s) regarding the accommodation.

RECORD SOURCE CATEGORIES:

Records in This System are Obtained From:

a. The individual to whom the records pertain.

b. Federal and private sector medical practitioners and treatment facilities.

c. Supervisors/managers and other agency officials.

d. Other agency records.

In addition, records are obtained through attestations, interviews, or electronically from the individuals working for the PRC; those individuals who are physically present in a PRC facility or at a PRC event; other Federal or state agencies; physicians (as allowed by law or with consent from the individual); PRC visitors or their employers; and PRC personnel and visitors who maintain (manually or electronically) a log or report of their close physical contacts (and the duration of that contact) while in PRC facilities to individuals designated by PRC.

ROUTINE USES OF RECORDS MAINTAINED IN THE SYSTEM, INCLUDING CATEGORIES OF USERS AND PURPOSES OF SUCH USES:

In addition to those disclosures generally permitted under the Privacy Act of 1974, records and/or information or portions thereof maintained as part of this system may be disclosed outside PRC as a routine use as follows:

a. To disclose relevant information to the Department of Labor, Department of Veterans Affairs, Social Security Administration, Federal Retirement Thrift Investment Board, or a national, state, or local social security type agency, when necessary to adjudicate a claim (filed by or on behalf of the individual) under a retirement, insurance, or health benefit program.

b. To disclose relevant information to a Federal, state, or local agency to the extent necessary to comply with laws governing reporting of communicable disease.

c. To disclose relevant and necessary information to another Federal, state, or local agency, to a court, or a party in litigation before a court or in an administrative proceeding being conducted by a Federal or state agency when the Government is a party to the judicial or administrative proceeding.

d. To the United States Department of Justice (''DOJ''), for the purpose of representing or providing legal advice to the PRC in a proceeding before a court, adjudicative body, or other administrative body before which the PRC is authorized to appear, when the records are relevant and necessary to the proceeding, when such proceeding involves:

1. The agency, or any component thereof; or

2. Any employee of the agency in their official capacity; or

3. Any employee of the agency in their individual capacity where the DOJ or the agency has agreed to represent the employee; or

4. The United States, where the agency determines that litigation is likely to affect the agency or any of its components, is a party to litigation or has an interest in such litigation, and the use of such records by the DOJ or the agency is deemed by the agency to be relevant and necessary to the litigation.

e. To Federal agencies such as the Health and Human Services (HHS), State and local health departments, and other public health or cooperating medical authorities in connection with program activities and related collaborative efforts to deal more effectively with exposures to communicable diseases, and to satisfy mandatory reporting requirements when applicable.

f. To appropriate Federal, state, local, tribal, or foreign governmental agencies or multilateral governmental organizations, to the extent permitted by law, and in consultation with legal counsel, for the purpose of protecting the vital interests of a data subject or other persons, including to assist such agencies or organizations in preventing exposure to or transmission of a communicable or quarantinable disease or to combat other significant public health threats.

g. Where a record, either alone or in conjunction with other information, indicates a violation or potential violation of law—criminal, civil, or regulatory in nature—the relevant records may be disclosed to the appropriate federal, state, local, territorial, tribal, or foreign law enforcement authority or other appropriate entity charged with the responsibility for investigating or prosecuting such violation or charged with enforcing or implementing such law.

h. To disclose information to the Federal Labor Relations Authority and its General Counsel, the Equal Employment Opportunity Commission, arbitrators, and hearing examiners to the extent necessary to carry out their authorized duties.

i. To disclose information to the Office of Federal Employees Group Life Insurance or Federal Retirement Thrift Investment Board that is relevant and necessary to adjudicate claims.

j. To disclose information, when an individual to whom a record pertains is mentally incompetent or under other legal disability, to any person who is responsible for the care of the individual, to the extent necessary.

k. To disclose to the agency-appointed representative of an employee, all notices, determinations, decisions, or other written communications issued to the employee, in connection with an examination ordered by an agency under medical evaluation (formerly Fitness for Duty) examinations procedures.

l. To disclose information to a Federal, state, or local agency, in response to its request or at the initiation of the agency maintaining the records, in connection with the retention of an employee, the issuance of a security clearance, the conducting of a suitability or security investigation of an individual, the classifying of jobs, the letting of a contract, or the issuance of a license, grant, or other benefit by the requesting agency, or the lawful, statutory, administrative, or investigative purpose of the agency, to the extent that the information is relevant and necessary to the requesting agency's decision on the matter.

m. To disclose to any Federal, state, or local government agency, in response to its request or at the initiation of the agency maintaining the records, information relevant and necessary to the lawful, statutory, administrative, or investigatory purpose of that agency as it relates to individuals who might have contracted an illness or been exposed to or suffered from a health hazard while employed in the Federal workforce or the assurance of compliance with Federal, state, or local government laws on health and safety in the work environment.

n. To disclose information to contractors or volunteers performing or working on a contract, service, grant, cooperative agreement or job for the Federal Government.

o. To the National Archives and Records Administration (NARA) pursuant to records management inspections being conducted under the authority of 44 U.S.C. 2904 and 2906.

p. To appropriate agencies, entities, and persons when (1) the PRC suspects or has confirmed that there has been a breach of PRC systems; (2) the PRC has determined that as a result of the suspected or confirmed breach there is a risk of harm to individuals, the PRC (including its information systems, programs, and operations), the Federal Government, or national security; and (3) the disclosure made to such agencies, entities, and persons is reasonably necessary to assist in connection with the PRC's efforts to respond to the suspected or confirmed breach or to prevent, minimize, or remedy such harm.

q. To another Federal agency or Federal entity, when the PRC determines that information from this system of records is reasonably necessary to assist the recipient agency or entity in (1) responding to a suspected or confirmed breach or (2) preventing, minimizing, or remedying the risk of harm to individuals, the recipient agency or entity (including its information systems, programs, and operations), the Federal Government, or national security, resulting from a suspected or confirmed breach.

r. The PRC may disclose information to a Member of Congress or staff acting upon the Member's behalf when the Member or staff requests the information on behalf of, and at the written request of, the individual who is the subject of the record.

POLICIES AND PRACTICES FOR STORAGE OF RECORDS:

PRC stores records in this system electronically or on paper in secure facilities in a locked drawer behind a locked door. The records may be stored on magnetic disc, cloud storage, and digital media. Medical information collected is maintained on separate forms and in separate medical files and are treated as confidential medical records.

POLICIES AND PRACTICES FOR RETRIEVAL OF RECORDS:

Records are retrieved by an individual's name or other identification information (such as email address, employee identification number, or SSN).

POLICIES AND PRACTICES FOR RETENTION AND DISPOSAL OF RECORDS:

Records are managed in accordance with the PRC Records Schedule DAA–0458–2018–0001, and General Records Schedules (GRS) 2.7 Employee Health and Safety Records DAA–GRS–2017–0010–0012.

ADMINISTRATIVE, TECHNICAL, AND PHYSICAL SAFEGUARDS:

Records in this system are safeguarded in accordance with applicable law, rules and policies, including all applicable PRC automated systems security and access policies. Strict controls have been imposed to minimize the risk of compromising the information that is being stored. Access to the computer system containing the records in this system is limited to those individuals who have a need to know the information for the performance of their official duties and who have appropriate clearances.

RECORD ACCESS PROCEDURES:

Individuals seeking access to and notification of any record contained in this system of records referencing them, or seeking to contest its content, may submit a request in writing to the Secretary whose contact information can be found at *https://www.prc.gov/foia* under ''PRC FOIA and Privacy Act Information.'' If an individual believes more than one component maintains Privacy Act records concerning him or her, the individual may submit the request to the FOIA Public Liaison, Postal Regulatory Commission, 901 New York Ave NW, Suite 200, Washington, DC 202–789–6800.

When an individual is seeking records about himself or herself from this system of records or any other PRC system of records, the individual's request must conform with the Privacy Act regulations set forth in 39 CFR part 3006. The individual must first verify their identity, meaning that the individual must provide their full name, current address, and date and place of birth. The individual must sign the request, and the individual's signature must either be notarized or submitted under 28 U.S.C. 1746, a law that permits statements to be made under penalty of perjury as a substitute for notarization. While no specific form is required, an individual may obtain forms for this purpose from the FOIA Public Liaison, available via *https://www.prc.gov/foia* or 202–789–6800. In addition, the individual should:

- Explain why they believe the PRC would have information being requested;
- Identify which component(s) of the PRC they believe may have the information;
- Specify when the individual believes the records would have been created; and
- Provide any other information that will help the FOIA staff determine which PRC component may have responsive records;

If the request is seeking records pertaining to another living individual, the request must include an authorization from the individual whose record is being requested, authorizing the release to the requester.

Without the above information, the component(s) may not be able to conduct an effective search, and the individual's request may be denied due to lack of specificity or lack of compliance with applicable regulations.

CONTESTING RECORD PROCEDURES:

Individuals may make a request for amendment or correction of a record of the PRC about the individual by writing directly to the Secretary, unless the record is not subject to amendment or correction. The request should identify each particular record in question, state the amendment or correction desired, and state why the individual believes that the record is not accurate, relevant, timely, or complete. The individual may submit any documentation that would be helpful. The request should state whether the individual believes that the same record is in more than one system of records.

NOTIFICATION PROCEDURES:

See ''Records Access Procedures'' above.

EXEMPTIONS PROMULGATED FOR THE SYSTEM:

None.

HISTORY:

None.

By the Commission.

Erica A. Barker,

Secretary.

[FR Doc. 2021–23833 Filed 11–1–21; 8:45 am]

BILLING CODE 7710–FW–P

RAILROAD RETIREMENT BOARD

Sunshine Act Meetings

TIME AND DATE: 1:30 p.m., November 9, 2021.

PLACE: Members of the public wishing to attend the meeting must submit a written request at least 24 hours prior to the meeting to receive dial-in information. All requests must be sent to *SecretarytotheBoard@rrb.gov.*

STATUS: This meeting will be open to the public.

MATTERS TO BE CONSIDERED:

(1) Director of Programs Briefing
(2) Director of Field Service Briefing
(3) Hiring Update
(4) Office of Legislative Affairs Briefing

CONTACT PERSON FOR MORE INFORMATION: Stephanie Hillyard, Secretary to the Board, (312) 751–4920.

Authority: 5 U.S.C. 552b.

Dated: October 29, 2021.

Stephanie Hillyard,

Secretary to the Board.

[FR Doc. 2021–23988 Filed 10–29–21; 4:15 pm]

BILLING CODE 7905–01–P

SECURITIES AND EXCHANGE COMMISSION

[Release No. 34–93432; File No. SR–ICC–2021–022]

Self-Regulatory Organizations; ICE Clear Credit LLC; Notice of Filing of Proposed Rule Change Relating to the ICC End-of-Day Price Discovery Policies and Procedures

October 27, 2021.

Pursuant to Section 19(b)(1) of the Securities Exchange Act of 1934 (''Act''),[1] and Rule 19b–4 thereunder,[2] notice is hereby given that on October 13, 2021, ICE Clear Credit LLC (''ICC'') filed with the Securities and Exchange Commission (''Commission'') the proposed rule change as described in Items I, II and III below, which Items have been prepared primarily by ICC. The Commission is publishing this notice to solicit comments on the proposed rule change from interested persons.

[1] 15 U.S.C. 78s(b)(1).

[2] 17 CFR 240.19b–4.

I. Clearing Agency's Statement of the Terms of Substance of the Proposed Rule Change

The principal purpose of the proposed rule change is to make changes to ICC's End-of-Day Price Discovery Policies and Procedures (''Pricing Policy''). These revisions do not require any changes to the ICC Clearing Rules (the ''Rules'').

II. Clearing Agency's Statement of the Purpose of, and Statutory Basis for, the Proposed Rule Change

In its filing with the Commission, ICC included statements concerning the purpose of and basis for the proposed rule change, security-based swap submission, or advance notice and discussed any comments it received on the proposed rule change, security-based swap submission, or advance notice. The text of these statements may be examined at the places specified in Item IV below. ICC has prepared summaries, set forth in sections (A), (B), and (C) below, of the most significant aspects of these statements.

(A) Clearing Agency's Statement of the Purpose of, and Statutory Basis for, the Proposed Rule Change

(a) Purpose

ICC proposes revising the Pricing Policy, which sets out ICC's end-of-day (''EOD'') price discovery process that provides prices for cleared contracts using submissions made by Clearing Participants (''CPs''). ICC requires all CPs to provide EOD submissions for specific instruments related to their open positions at ICC. Submissions for index instruments (''index submissions'') may be provided in spread or price convention under the current Pricing Policy. The proposed amendments would remove the ability for CPs to provide index submissions in spread convention and would require all index submissions to be provided in price convention. ICC believes such revisions will facilitate the prompt and accurate clearance and settlement of securities transactions and derivative agreements, contracts, and transactions for which it is responsible. ICC proposes to move forward with implementation of these changes following Commission approval of the proposed rule change.[3]

[3] ICC intends to move away from supporting index submissions in spread convention in a phased approach and does not intend to remove the ability for CPs to submit index submissions in spread convention until ICC is permitted to implement the changes described herein and ICC completes any other required governance or internal processes.

The proposed amendments are described in detail as follows.

ICC proposes to amend Subsection 2.2.3, which sets out the submission format requirements for index instruments. Currently, index submissions may be provided in spread or price convention depending on the instrument, as illustrated in Table 8. Under the proposed changes, index submissions must be provided in price convention, which has two acceptably types, price or upfront. The proposed changes remove Table 8 and language regarding the submission of recovery rates, which related to submissions provided in spread terms and is no longer necessary. ICC proposes minor changes to renumber the tables in the Pricing Policy accordingly and to spell out an abbreviated term in this subsection.

ICC proposes to amend Subsection 2.2.4 related to the standardization of submissions. Currently, the cross-and-lock algorithm used by ICC to determine EOD prices and potential trades requires inputs in bid-offer format and executes in price or spread terms depending on the convention for the considered instrument. ICC standardizes CP submissions into bid-offer format in either price or spread terms, depending on the convention. Under the proposed changes, the cross-and-lock algorithm will execute in price terms. The proposed changes remove language referencing spread terms and distinguishing between price and spread terms. The proposed changes also remove language differentiating between submissions in price or spread in subpart (a).

ICC proposes similar changes to Subsection 2.3. ICC would no longer determine EOD levels in terms of either spread or price. The proposed changes remove language requiring ICC to execute the cross-and-lock algorithm in spread-space for index instruments with a quote convention of spread, in price-space for index instruments with a quote convention of price, and in price-space for all single name and index option instruments. Currently, in Subsection 2.3.1(g), ICC adjusts outlying submission trade prices for index option, single name, and index instruments with a cross-and-lock convention of price and outlying submission trade spreads for index instruments with a cross-and-lock convention of spread. For index instruments with a cross-and-lock convention of spread, a conversion between trade price and spread is also done. The proposed changes would remove the need to adjust outlying submission trade spreads, including the need for such conversion.

(b) Statutory Basis

ICC believes that the proposed rule change is consistent with the requirements of Section 17A of the Act[4] and the regulations thereunder applicable to it, including the applicable standards under Rule 17Ad–22.[5] In particular, Section 17A(b)(3)(F) of the Act[6] requires that the rule change be consistent with the prompt and accurate clearance and settlement of securities transactions and derivative agreements, contracts and transactions cleared by ICC, the safeguarding of securities and funds in the custody or control of ICC or for which it is responsible, and the protection of investors and the public interest. ICC believes that the proposed amendments promote its ability to maintain the effectiveness and integrity of its EOD price discovery process. The proposed revisions require all index submissions to be provided in price convention and remove language distinguishing between price or spread in certain aspects of the price discovery process, which is no longer necessary. The cross-and-lock algorithm would execute in price terms (rather than in price or spread terms depending on the convention for the considered instrument) and ICC would no longer determine EOD levels in terms of either spread or price. The proposed amendments allow ICC to further standardize its instrument submission requirements, which would promote consistency and simplify ICC's submission format requirements. The proposed changes would result in more clarity and uniformity around how certain processes are completed, including the standardization of submissions and adjustments for outlying submission trades, and allow ICC to avoid converting between spread and price. Following such changes, ICC will continue to maintain a robust EOD price discovery process, which includes the determination of EOD pricing levels and firm trades. The proposed rule change is therefore consistent with the prompt and accurate clearing and settlement of the contracts cleared by ICC, the safeguarding of securities and funds in the custody or control of ICC or for which it is responsible, and the protection of investors and the public interest, within the meaning of Section 17A(b)(3)(F) of the Act.[7]

[4] 15 U.S.C. 78q–1.

[5] 17 CFR 240.17Ad–22.

[6] 15 U.S.C. 78q–1(b)(3)(F).

[7] *Id.*

The amendments would also satisfy relevant requirements of Rule 17Ad–22.[8] Rule 17Ad–22(e)(2)(i) and (v)[9] requires each covered clearing agency to establish, implement, maintain, and enforce written policies and procedures reasonably designed to provide for governance arrangements that are clear and transparent and specify clear and direct lines of responsibility. The Pricing Policy continues to subject the ICC EOD price discovery process to a governance and oversight structure that promotes transparency and accountability and clearly assigns and documents responsibility for relevant actions and decisions. ICC believes that the proposed rule change would promote consistency and transparency in ICC's price discovery process and thus enhance implementation of the Pricing Policy and continue to ensure that responsible parties appropriately and effectively carry out their duties. As such, the proposed rule change continues to ensure that ICC maintains policies and procedures that are reasonably designed to provide for clear and transparent governance arrangements and specify clear and direct lines of responsibility, consistent with the requirements of Rule 17Ad–22(e)(2)(i) and (v).[10]

Rule 17Ad–22(e)(3)(i)[11] requires each covered clearing agency to establish, implement, maintain, and enforce written policies and procedures reasonably designed to maintain a sound risk management framework for comprehensively managing legal, credit, liquidity, operational, general business, investment, custody, and other risks that arise in or are borne by the covered clearing agency, which includes risk management policies, procedures, and systems designed to identify, measure, monitor, and manage the range of risks that arise in or are borne by the covered clearing agency, that are subject to review on a specified periodic basis and approved by the board of directors annually. The Pricing Policy is a key aspect of ICC's risk management approach, which continues to be subject to review on a specified periodic basis and approved by the Board annually. The proposed changes further standardize ICC's instrument submission requirements, remove the need to distinguish between price and spread terms in certain aspects of the price discovery process, and allow ICC to avoid converting between spread and price. In ICC's view, such changes would simplify and promote transparency in ICC's price discovery process and thus enhance implementation of the Pricing Policy. The proposed rule change would thus strengthen ICC's ability to manage risk associated with its price discovery process, and ICC's risk management more generally as ICC uses the resulting EOD prices for risk management purposes, and ICC would continue to derive reliable, market-driven prices from its price discovery process. As such, the amendments would satisfy the requirements of Rule 17Ad–22(e)(3)(i).[12]

Rule 17Ad–22(e)(6)(iv)[13] requires each covered clearing agency to establish, implement, maintain, and enforce written policies and procedures reasonably designed to cover its credit exposures to its participants by establishing a risk-based margin system that, at a minimum uses reliable sources of timely price data and uses procedures and sound valuation models for addressing circumstances in which pricing data are not readily available or reliable. ICC believes that the proposed changes are appropriately designed to support and maintain the effectiveness of ICC's EOD price discovery process that provides reliable prices, which ICC uses for risk management purposes. As described above, the proposed changes would result in more consistency in ICC's instrument submission requirements as well as more clarity and uniformity around how certain processes are completed, including the standardization of submissions and adjustments for outlying submission trades. ICC believes that the proposed rule change would result in additional clarity surrounding ICC's price discovery process overall and ICC's determination of EOD levels. In ICC's view, such changes are appropriately designed to promote and maintain the effectiveness and integrity of the Pricing Policy and the EOD price discovery process that provides reliable prices, consistent with the requirements of Rule 17Ad–22(e)(6)(iv).[14]

(B) Clearing Agency's Statement on Burden on Competition

ICC does not believe the proposed rule change would have any impact, or impose any burden, on competition. The proposed changes to the Pricing Policy will apply uniformly across all market participants. Therefore, ICC does not believe the amendments would impose any burden on competition not necessary or appropriate in furtherance of the purposes of the Act.

(C) Clearing Agency's Statement on Comments on the Proposed Rule Change Received From Members, Participants or Others

Written comments relating to the proposed rule change have not been solicited or received. ICC will notify the Commission of any written comments received by ICC.

III. Date of Effectiveness of the Proposed Rule Change and Timing for Commission Action

Within 45 days of the date of publication of this notice in the **Federal Register** or within such longer period up to 90 days (i) as the Commission may designate if it finds such longer period to be appropriate and publishes its reasons for so finding or (ii) as to which the self-regulatory organization consents, the Commission will:

(A) By order approve or disapprove such proposed rule change, or

(B) institute proceedings to determine whether the proposed rule change should be disapproved.

IV. Solicitation of Comments

Interested persons are invited to submit written data, views, and arguments concerning the foregoing, including whether the proposed rule change is consistent with the Act. Comments may be submitted by any of the following methods:

Electronic Comments

- Use the Commission's internet comment form (*http://www.sec.gov/rules/sro.shtml*); or
- Send an email to *rule-comments@sec.gov*. Please include File Number SR–ICC–2021–022 on the subject line.

Paper Comments

Send paper comments in triplicate to Secretary, Securities and Exchange Commission, 100 F Street NE, Washington, DC 20549.

All submissions should refer to File Number SR–ICC–2021–022. This file number should be included on the subject line if email is used. To help the Commission process and review your comments more efficiently, please use only one method. The Commission will post all comments on the Commission's internet website (*http://www.sec.gov/rules/sro.shtml*). Copies of the submission, all subsequent amendments, all written statements with respect to the proposed rule change that are filed with the Commission, and all written communications relating to the

[8] 17 CFR 240.17Ad–22.

[9] 17 CFR 240.17Ad–22(e)(2)(i) and (v).

[10] *Id.*

[11] 17 CFR 240.17Ad–22(e)(3)(i).

[12] *Id.*

[13] 17 CFR 240.17Ad–22(e)(6)(iv).

[14] *Id.*

proposed rule change between the Commission and any person, other than those that may be withheld from the public in accordance with the provisions of 5 U.S.C. 552, will be available for website viewing and printing in the Commission's Public Reference Room, 100 F Street NE, Washington, DC 20549, on official business days between the hours of 10:00 a.m. and 3:00 p.m. Copies of such filings will also be available for inspection and copying at the principal office of ICE Clear Credit and on ICE Clear Credit's website at *https://www.theice.com/clear-credit/regulation.*

All comments received will be posted without change. Persons submitting comments are cautioned that we do not redact or edit personal identifying information from comment submissions. You should submit only information that you wish to make available publicly. All submissions should refer to File Number SR–ICC–2021–022 and should be submitted on or before November 23, 2021.

For the Commission, by the Division of Trading and Markets, pursuant to delegated authority.[15]

J. Matthew DeLesDernier,

Assistant Secretary.

[FR Doc. 2021–23813 Filed 11–1–21; 8:45 am]

BILLING CODE 8011–01–P

[15] 17 CFR 200.30–3(a)(12).

SECURITIES AND EXCHANGE COMMISSION

[Release No. PA–57; File No. S7–14–21]

Privacy Act of 1974; System of Records

AGENCY: Securities and Exchange Commission.

ACTION: Notice of a new system of records.

SUMMARY: The Securities and Exchange Commission (SEC) established SEC–34, Public Health and Safety Records under the Privacy Act of 1974. This system of records maintains information collected in response to a public health emergency. Information will be collected from SEC personnel (political appointees, employees, consultants, detailees, interns, and volunteers), contractors, visitors, job applicants, and others who access or seek to access SEC facilities or worksites to assist the SEC with maintaining a safe and healthy workplace and to protect its workforce from risks associated with communicable diseases.

DATES: The changes will become effective December 2, 2021 to permit public comment on the new and revised routine uses. The Commission will publish a new notice if the effective date is delayed to review comments or if changes are made based on comments received. To assure consideration, comments should be received on or before December 2, 2021.

ADDRESSES: Comments may be submitted by any of the following methods:

Electronic Comments

- Use the Commission's internet comment form (*http://www.sec.gov/rules/other.shtml*); or
- Send an email to *rule-comments@sec.gov.* Please include File Number S7–14–21 on the subject line.

Paper Comments

Send paper comments to Vanessa A. Countryman, Secretary, U.S. Securities and Exchange Commission, 100 F Street NE, Washington, DC 20549–1090. All submissions should refer to S7–14–21. This file number should be included on the subject line if email is used. To help process and review your comments more efficiently, please use only one method. The Commission will post all comments on the Commission's internet website (*http://www.sec.gov/rules/other.shtml*). Comments are also available for website viewing and printing in the Commission's Public Reference Room, 100 F Street NE, Washington, DC 20549, on official business days between the hours of 10 a.m. and 3 p.m. All comments received will be posted without change; we do not edit personal identifying information from submissions. You should submit only information that you wish to make publicly available.

FOR FURTHER INFORMATION CONTACT: For general and privacy related questions please contact: Ronnette McDaniel, Privacy and Information Assurance Branch Chief, 202–551–7200 or *privacyhelp@sec.gov.*

SUPPLEMENTARY INFORMATION: In order to collect and maintain contractor, visitor and job applicant disclosures, the SEC established SEC–34, Public Health and Safety Records, a system of records under the Privacy Act. The SEC is committed to maintaining a safe and healthy workplace and to protect its workforce from risks associated with a public health emergency. To ensure and maintain the safety of all SEC personnel (political appointees, employees, consultants, detailees, interns, and volunteers), contractors, visitors, job applicants, and others who access or seek to access an SEC facility, space, or worksite during a public health emergency, the SEC may develop and institute safety measures that require the collection of personal information. Records may include information on individuals' vaccination status and information to support a request for reasonable accommodation based on disability or sincerely held religious belief. Records also may include information on individuals who have been suspected or confirmed to have contracted a disease or illness, or who have been exposed to an individual who had been suspected or confirmed to have contracted a disease or illness, related to a declared public health emergency. Records may also include information on the individual circumstances surrounding the disease or illness such as dates of suspected exposure, testing results, symptoms, treatments, and other related health status information. Any contact tracing conducted by SEC personnel will involve collecting information about SEC personnel, contractors and visitors who are exhibiting symptoms or who have tested positive for an infectious disease in order to identify and notify other SEC personnel, contractors and visitors with whom they may have come into contact and who may have been exposed. Records may also include information on individuals identified as emergency contacts for SEC personnel.

Information from this system of records will be collected, maintained, and disclosed in accordance with applicable law, regulations, and statutes, including, but not limited to; the Americans with Disabilities Act of 1990 and regulations and guidance published by the U.S. Occupational Safety and Health Administration, the U.S. Equal Employment Opportunity Commission, and the U.S. Centers for Disease Control and Prevention.

SYSTEM NAME AND NUMBER:

SEC–34 Public Health and Safety Records.

SECURITY CLASSIFICATION:

Non-classified.

SYSTEM LOCATION:

Securities and Exchange Commission (SEC), 100 F Street NE, Washington, DC 20549. Files may also be maintained in the following SEC Regional Offices: Atlanta Regional Office (ARO), 950 East Paces Ferry Road NE, Suite 900, Atlanta, GA 30326–1382; Boston Regional Office (BRO), 33 Arch Street, 24th Floor, Boston, MA 02110–1424; Chicago Regional Office (CHRO), 175 W Jackson Boulevard, Suite 1450, Chicago, IL 60604; Denver Regional Office (DRO), Byron Rogers Federal Office Building,

1961 Stout Street, Suite 1700, Denver, CO 80294–1961; Fort Worth Regional Office (FWRO), Burnett Plaza, 801 Cherry Street, Suite 1900, Unit 18, Fort Worth, TX 76102; Los Angeles Regional Office (LARO), 444 South Flower Street, Suite 900, Los Angeles, CA 90071; Miami Regional Office (MIRO), 801 Brickell Avenue, Suite 1950, Miami, FL 33131; New York Regional Office (NYRO), Brookfield Place, 200 Vesey Street, Suite 400, New York, NY 10281–1022; Philadelphia Regional Office (PLRO), One Penn Center, 1617 John F. Kennedy Boulevard, Suite 520, Philadelphia, PA 19103–1844; Salt Lake Regional Office (SLRO), 351 S West Temple St., Suite 6.100, Salt Lake City, UT 84101; and San Francisco Regional Office (SFRO), 44 Montgomery Street, Suite 2800, San Francisco, CA 94104.

SYSTEM MANAGER(S):

Chief Operating Officer, Securities and Exchange Commission, 100 F Street NE, Washington, DC 20549.

AUTHORITY FOR MAINTENANCE OF THE SYSTEM:

The authority to collect this information derives from General Duty Clause, Sections 5(a)(1) and 19(a) of the Occupational Safety and Health (OSH) Act of 1970 (29 U.S.C. 654(a)(1), 668(a)); Section 319 of the Public Health Service Act (42 U.S.C. 247d); E.O. 12196, *Occupational Safety and Health Programs for Federal Employees* (Feb. 26, 1980); E.O 13991, *Protecting the Federal Workforce and Requiring Mask-Wearing;* (Jan. 25, 2021); *Executive Order on Ensuring Adequate COVID Safety Protocols for Federal Contractors* (September 9, 2021); *Executive Order on Requiring Coronavirus Disease 2019 Vaccination for Federal Employees* (September 9, 2021); OMB Memorandum M–20–23 *Aligning Federal Agency Operations with the National Guidelines for Opening Up America Again* (Apr. 20, 2020); and OMB Memorandum M–21–15 *COVID–19 Safe Federal Workplace: Agency Model Safety Principles* (Jan. 24, 2021). Information will be collected and maintained in accordance with the Americans with Disabilities Act of 1990 (42 U.S.C. 12101 *et seq.*)

PURPOSE(S) OF THE SYSTEM:

The information in the system is collected to assist the SEC with maintaining a safe and healthy workplace and to protect its workforce from risks associated with communicable diseases that the Secretary of the Department of Health and Human Services has determined to be a public health emergency pursuant to Section 319(a) of the Public Health Service Act (42 U.S.C. 247d(a)) (''Public Health Emergency''). Records in this system may be collected, maintained, and used to: (1) Determine who may be allowed access to SEC facilities or worksites and what testing or medical screening is necessary before a person may enter; (2) respond to a significant risk of harm to SEC personnel, contractors, and visitors, as well as to any others in SEC facilities or worksites; (3) document reports that SEC personnel, contractors, or any persons who have been in SEC facilities or worksites may have or may have been exposed to a communicable disease that is the subject of a Public Health Emergency; (4) perform contact tracing investigations of and notifications to SEC personnel, contractors, and visitors known or suspected of exposure to communicable diseases that are the subject of a Public Health Emergency; (5) inform federal, state, or local public health authorities so that these authorities may act to protect public health as allowed or required by law; (6) implement such actions (*e.g.,* quarantine or isolation) as necessary to prevent the introduction, transmission, and spread of a communicable disease that is the subject of a Public Health Emergency by SEC personnel, contractors, and persons who have been in SEC facilities or worksites; (7) comply with Occupational Safety and Health Administration Act recordkeeping requirements; and (8) process employee requests for reasonable accommodation based on disability or sincerely held religious belief.

CATEGORIES OF INDIVIDUALS COVERED BY THE SYSTEM:

Individuals covered by this system include all SEC personnel (political appointees, employees, consultants, detailees, interns, and volunteers), contractors, visitors, job applicants, and others who access or seek to access SEC facilities or worksites. The system also covers individuals identified as emergency contacts for SEC staff.

CATEGORIES OF RECORDS IN THE SYSTEM:

Information collected and maintained may include, but is not limited to:

—Biographical information: Name and contact information.

—Health information: Body temperature, dates of and symptoms relating to a potential or actual exposure to a pathogen, or immunization and/or vaccination information.

—Information to support a request for reasonable accommodation based on disability or sincerely held religious belief.

—Contact tracing information: Dates of visits to SEC facilities, locations visited within the facility (*e.g.,* office and cubicle number), the duration of time spent in the facility, dates the SEC was made aware of the exposure, and potential contacts between potentially contagious persons and others in SEC facilities.

—Testing Results: Negative results, confirmed or unconfirmed positive test results, and documents related to the reasons for testing or other aspects of test results.

—Subsequent actions taken by the SEC to address an incident: Identifying and contact information of individuals who have been suspected or confirmed to have contracted a communicable disease that is the subject of a Public Health Emergency, or who have been exposed to an individual who has been suspected or confirmed to have contracted a communicable disease that is the subject of a Public Health Emergency; individual circumstances and dates of suspected exposure; symptoms; and treatments. The SEC uses this information to maintain a safe and healthy workplace and to protect its workforce. Although it is not the intent for the SEC to collect family medical information, an individual may indicate that they were exposed to specific family members who have been diagnosed with, or are suspected to have, the disease in question. To the extent this information may be acquired inadvertently, such information will be kept as a confidential medical record and maintained separately from an employee's SEC personnel file.

RECORD SOURCE CATEGORIES:

The information in this system is collected directly from the individual or from the individual's emergency contact. Information may also be collected from security systems that monitor access to SEC facilities, such as badging systems, video surveillance, human resources systems, emergency notification systems, and federal, state, and local agencies assisting with the response to a Public Health Emergency. Information may also be collected from SEC contractors or from property management companies responsible for managing office buildings that house SEC facilities or worksites, including the General Services Administration (GSA).

ROUTINE USES OF RECORDS MAINTAINED IN THE SYSTEM, INCLUDING CATEGORIES OF USERS AND THE PURPOSES OF SUCH USES:

In addition to those disclosures generally permitted under 5 U.S.C. 552a(b) of the Privacy Act, these records

or information contained therein may specifically be disclosed outside the Commission as a routine use pursuant to 5 U.S.C. 552a(b)(3) as follows:

1. To appropriate agencies, entities, and persons when (a) it is suspected or confirmed that the security or confidentiality of information in the system of records has been compromised; (b) the SEC has determined that, as a result of the suspected or confirmed compromise, there is a risk of harm to economic or property interests, identity theft or fraud, or harm to the security or integrity of this system or other systems or programs (whether maintained by the SEC or another agency or entity) that rely upon the compromised information; and (c) the disclosure made to such agencies, entities, and persons is reasonably necessary to assist in connection with the SEC's efforts to respond to the suspected or confirmed compromise and prevent, minimize, or remedy such harm.

2. To a Federal, State, or local agency to the extent necessary to comply with laws governing reporting of infectious disease.

3. To SEC personnel, contractors, visitors, emergency contacts, or others to notify an individual (1) who has been exposed or may have potentially been exposed to a communicable disease that is the subject of a Public Health Emergency of information regarding the exposure or potential exposure, or (2) who may have reason to know of circumstances that increase the risk of such exposure. To the extent possible, all information will be anonymized.

4. To another Federal agency, to a court, or a party in litigation before a court or in an administrative proceeding being conducted by a Federal agency when the SEC is a party to the judicial or administrative proceeding where the information is relevant and necessary to the proceeding.

5. To employees, grantees, experts, contractors, and others who have been engaged by the Commission to assist in the performance of a service related to this system of records and who need access to the records for the purpose of assisting the Commission in the efficient administration of its programs, including by performing clerical, stenographic, or data analysis functions, or by reproduction of records by electronic or other means. Recipients of these records shall be required to comply with the requirements of the Privacy Act of 1974, as amended, 5 U.S.C. 552a.

6. To produce summary descriptive statistics and analytical studies, as a data source for management information, in support of the function for which the records are collected and maintained or for related personnel management functions or manpower studies; may also be used to respond to general requests for statistical information (without personal identification of individuals) under the Freedom of Information Act.

7. To a Congressional office from the record of an individual in response to an inquiry from the Congressional office made at the request of that individual.

8. To members of Congress, the Government Accountability Office, or others charged with monitoring the work of the Commission or conducting records management inspections.

9. To another Federal agency or Federal entity, when the SEC determines that information from this system of records is reasonably necessary to assist the recipient agency or entity in (1) responding to a suspected or confirmed breach or (2) preventing, minimizing, or remedying the risk of harm to individuals, the recipient agency or entity (including its information systems, programs, and operations), the Federal Government, or national security, resulting from a suspected or confirmed breach.

POLICIES AND PRACTICES FOR STORAGE OF RECORDS:

Records in this system of records are stored electronically or on paper in secure facilities. Electronic records are stored on the SEC's secure network.

POLICIES AND PRACTICES FOR RETRIEVAL OF RECORDS:

Information covered by this system of records notice may be retrieved by the name of the individual, contact information, or by some combination thereof.

POLICIES AND PRACTICES FOR RETENTION AND DISPOSAL OF RECORDS:

The records will be maintained until they become inactive, at which time they will be retired or destroyed in accordance with records schedules of the United States Securities and Exchange Commission, and as approved by the National Archives and Records Administration.

ADMINISTRATIVE, TECHNICAL, AND PHYSICAL SAFEGUARDS:

Access to SEC facilities, data centers, and information or information systems is limited to authorized personnel with official duties requiring access. SEC facilities are equipped with security cameras, and, at certain SEC facilities, 24-hour security guard service. Computerized records are safeguarded in a secured environment. Security protocols meet the promulgating guidance as established by the National Institute of Standards and Technology (NIST) Security Standards from Access Control to Data Encryption and Security Assessment & Authorization (SA&A). Records are maintained in a secure, password-protected electronic system that will utilize commensurate safeguards that may include: Firewalls, intrusion detection and prevention systems, and role-based access controls. Additional safeguards will vary by program. All records are protected from unauthorized access through appropriate administrative, operational, and technical safeguards. These safeguards include: Restricting access to authorized personnel who have a ''need to know''; using locks; and password protection identification features. Contractors and other recipients providing services to the Commission shall be required to maintain equivalent safeguards.

RECORD ACCESS PROCEDURES:

Persons wishing to obtain information on the procedures for gaining access to or contesting the contents of these records may contact the FOIA/PA Officer, Securities and Exchange Commission, 100 F Street NE, Mail Stop 5100, Washington, DC 20549–2736.

CONTESTING RECORD PROCEDURES:

See Record Access Procedures above.

NOTIFICATION PROCEDURES:

All requests to determine whether this system of records contains a record pertaining to the requesting individual may be directed to the FOIA/PA Officer, Securities and Exchange Commission, 100 F Street NE, Mail Stop 5100, Washington, DC 20549–2736.

EXEMPTIONS PROMULGATED FOR THE SYSTEM:

None.

HISTORY:

New SORN.

By the Commission.

Dated: October 27, 2021.

Vanessa A. Countryman,

Secretary.

[FR Doc. 2021–23821 Filed 11–1–21; 8:45 am]

BILLING CODE 8011–01–P

SECURITIES AND EXCHANGE COMMISSION

[Release No. 34–93436; File No. SR–OCC–2021–010]

Self-Regulatory Organizations; The Options Clearing Corporation; Notice of Filing and Immediate Effectiveness of Proposed Rule Change Concerning Revisions to the Titles of Certain Options Clearing Corporation Personnel

October 27, 2021.

Pursuant to Section 19(b)(1) of the Securities Exchange Act of 1934 (''Exchange Act'' or ''Act''),[1] and Rule 19b–4 thereunder,[2] notice is hereby given that on October 15, 2021, The Options Clearing Corporation (''OCC'') filed with the Securities and Exchange Commission (''Commission'') the proposed rule change as described in Items I, II, and III below, which Items have been prepared primarily by OCC. OCC filed the proposed rule change pursuant to Section 19(b)(3)(A)(iii) [3] of the Act and Rule 19b4(f)(6) [4] thereunder so that the proposal was effective upon filing with the Commission. The Commission is publishing this notice to solicit comments on the proposed rule change from interested persons.

I. Clearing Agency's Statement of the Terms of Substance of the Proposed Rule Change

The proposed rule changed would: (i) Revise references to the term ''Vice President'' and its derivatives in the OCC By-Laws and Rules, including policies filed as Rules (''Rule-Filed Policies''),[5] to instead reference revised titles including ''Managing Director,'' ''Executive Director,'' ''Executive Principal,'' or remove the reference, as appropriate, (ii) recognize in its By-Laws the role of its Chief Financial Officer in place of the roles of Treasurer and Controller, and (iii) make conforming and other non-substantive changes to OCC's Rule-Filed Policies and Recovery and Orderly Wind-Down Plan (''RWD Plan'').[6]

II. Clearing Agency's Statement of the Purpose of, and Statutory Basis for, the Proposed Rule Change

In its filing with the Commission, OCC included statements concerning the purpose of and basis for the proposed rule change and discussed any comments it received on the proposed rule change. The text of these statements may be examined at the places specified in Item IV below. OCC has prepared summaries, set forth in sections (A), (B), and (C) below, of the most significant aspects of these statements.

(A) Clearing Agency's Statement of the Purpose of, and Statutory Basis for, the Proposed Rule Change

(1) Purpose

The purpose of this rule change is to: (i) Revise references to the term ''Vice President'' and its derivatives in the OCC By-Laws, Rules, Rule-Filed Policies and RWD Plan, to instead reference revised titles including ''Managing Director,'' ''Executive Director,'' ''Executive Principal,'' or remove the reference, as appropriate; (ii) recognize in its By-Laws the role of its Chief Financial Officer in place of the roles of Treasurer and Controller; and (iii) make conforming and other non-substantive changes to OCC's Rule-Filed Policies and RWD Plan. As a covered clearing agency subject to Commission Rule 17Ad–22(e)(2),[7] OCC is required to establish, implement, maintain and enforce written policies and procedures reasonably designed to provide for governance arrangements that, among other things, are clear and transparent and specify clear and direct lines of responsibility. As noted by the Commission in adopting these requirements, ''the Commission recognizes that there may be a number of ways to address compliance with Rule 17Ad–22(e)(2)'' but that ''a covered clearing agency generally should consider . . . whether the roles and responsibilities of management have been clearly specified[.]'' [8] OCC believes that the proposed changes would help promote clarity in OCC's By-Laws, Rules, Rule-Filed Policies and RWD Plan regarding the roles and responsibilities of the relevant officers, as described below.

Currently, Article IV, Section 9 of OCC's By-Laws recognizes Vice President officers and states that they may be filled by the Board of Directors, Executive Chairman, Chief Executive Officer or Chief Operating Officer.[9] OCC's By-Laws, Rules, Rule-Filed Policies and RWD Plan currently reflect the titles of Vice President, Senior Vice President, First Vice President, and Executive Vice President. Under the proposed revised structure, these four titles will be reduced to three: ''Managing Director,'' ''Executive Director,'' and ''Executive Principal.'' Specifically, ''Executive Vice President'' and Senior Vice President'' titles would be changed to ''Managing Director,'' and ''First Vice President'' and ''Vice President'' titles would be changed to ''Executive Director'' if the person is a manager and ''Executive Principal'' if the person has no direct reports.[10] Under the proposal, there would be no delineation within the Managing Director title to indicate the previous distinction between Senior Vice Presidents and Executive Vice Presidents. OCC believes this is an appropriate simplification as the differences in responsibility between the titles that are being combined are not currently clearly defined within OCC's internal documentation. Accordingly, OCC believes the proposed change would simplify its structure and provide for more clearly delineated ranks and associated roles and responsibilities for such officers, rather than ambiguity between similar titles.

Changes to OCC's By-Laws and Rules

Specifically, OCC proposes to revise the current Vice President titles in the By-Laws and Rules as follows. OCC would amend the definition of Designated Officer in Article I of its By-Laws to replace the reference to Senior Vice President with ''Managing Director.'' This reflects that OCC

[1] 15 U.S.C. 78s(b)(1).

[2] 17 CFR 240.19b–4.

[3] 15 U.S.C. 78s(b)(3)(A)(iii).

[4] 17 CFR 240.19b–4(f)(6).

[5] For purposes of this filing, OCC's Rule-Filed Policies include its Capital Management Policy (Securities Exchange Act Release No. 88029 (Jan. 24, 2020), 85 FR 5500 (Jan. 20, 2020) (SR–OCC–2019–007)), Clearing Fund Methodology Policy (Securities Exchange Act Release No. 89037 (Jun. 10, 2020), 85 FR 36442 (Jun. 16, 2020) (SR–OCC–2020–006)), Collateral Risk Management Policy (Securities Exchange Act Release No. 90797 (Dec. 23, 2020), 85 FR 86592 (Dec. 30, 2020) (SR–OCC–2020–014)), Default Management Policy (Securities Exchange Act Release No. 89037 (Jun. 10, 2020), 85 FR 36442 (Jun. 16, 2020) (SR–OCC–2020–006)), Liquidity Risk Management Framework (Securities Exchange Act Release No. 90797 (Dec. 23, 2020), 85 FR 86592 (Dec. 30, 2020) (SR–OCC–2020–014)), Margin Policy (Securities Exchange Act Release No. 91079 (Feb. 8, 2021), 86 FR 9410 (Feb. 12, 2021) (SR–OCC–2020–016)), Model Risk Management Policy (Securities Exchange Act Release No. 82785 (Feb. 27, 2018), 83 FR 9345 (Mar. 5, 2018) (SR–OCC–2017–011)), Risk Management Framework Policy (Securities Exchange Act Release No. 90797 (Dec. 23, 2020), 85 FR 86592 (Dec. 30, 2020) (SR–OCC–2020–014)), and Third-Party Risk Management Framework (Securities Exchange Act Release No. 90797 (Dec. 23, 2020), 85 FR 86592 (Dec. 30, 2020) (SR–OCC–2020–014)).

[6] *See* Exchange Act Release No. 90712 (Dec. 17, 2020), 85 FR 84050 (Dec. 23, 2020) (SR–OCC–2020–013).

[7] 17 CFR 240.17Ad–22(e)(2).

[8] Exchange Act Release No. 78961 (Sept. 28, 2016), 81 FR 70786 (October 13, 2016) (File No S7–03–14).

[9] *See also* OCC By-Laws Article IV, Sections 1 and 2 (providing that the Board of Directors, Executive Chairman, Chief Executive Officer, and Chief Operating Officer have the authority to elect or appoint officers, which includes Vice Presidents).

[10] Under OCC's existing structure the differences in responsibilities between the titles ''First Vice President'' and ''Vice President'' are not clearly defined.

Executive Vice Presidents and Senior Vice Presidents would become ''Managing Directors'' in the proposed hierarchy. Changes would also be made to revise references from Senior Vice President to ''Managing Director'' in both: (i) Interpretation and Policy .03 to Section 1 of Article V of OCC's By-Laws and (ii) Interpretation and Policy .01 to OCC Rule 309. References to Vice Presidents would also be replaced by ''Managing Director,'' ''Executive Director,'' and ''Executive Principal,'' as applicable, in four other By-Law provisions. Those provisions are Article IV, Section 1, Article IV, Section 9 (including the title), and Article IX, Sections 1(a) and 12. These changes are proposed because the roles and responsibilities of each Vice President would instead be carried out by an individual having the title of ''Managing Director,'' ''Executive Director,'' or ''Executive Principal,'' as applicable.

OCC also proposes to delete Interpretation and Policy .01 to Article III, Section 15 of its By-Laws regarding emergency powers because the references to Vice Presidents would no longer be relevant. Instead, OCC would specify directly in the relevant subparts of Section 15 (rather than in an Interpretation and Policy) the officers who would have authority to take certain actions in an emergency in the event that the Board of Directors does not maintain a list of Designated Officers who would have such emergency authority. Proposed changes to Article III, Section 15 would also be made to clarify that the Chief Executive Officer and Chief Operating Officer are Designated Officers under the definition in Article I, Section 1.D.(8) of the By-Laws and that the definition also includes any officer who would hold the rank of Managing Director or higher and to whom the Chief Executive Officer or Chief Operating Officer has delegated authority to perform a duty or exercise a power under the By-Laws and Rules.

OCC is also proposing to remove the provisions from the By-Laws that recognize the offices of Treasurer and Controller and to instead identify that the Chief Financial Officer is an officer who has the responsibilities currently associated with the Treasurer and Controller.[11] OCC believes this better represents the organization of its Corporate Finance Department. Ultimate responsibility for the Corporate Finance Department rests with the Chief Financial Officer and OCC believes this position is appropriate to identify in its By-Laws and have appointed by its Board, rather than Treasurer and Controller. The By-Laws would be revised to reflect that all responsibilities currently described in Article IV, Section 11 and Article IV, Section 12 as pertaining to the roles of Treasurer or Controller will be combined into one Article IV, Section 11 as pertaining to the role of Chief Financial Officer, which would be elected by the Board. Consistent with these changes, OCC proposes to revise references to Treasurer to ''Chief Financial Officer'' in Article IV, Section 1 and Article IV, Section 10 of the By-Laws. Additionally, OCC proposes to revise references to Treasurer and Assistant Treasurer in Article IX, Section 1(a) of the By-Laws to ''Chief Financial Officer.''

OCC also proposes to make conforming changes to the table of contents of its By-Laws to reflect certain of the changes described above.

Changes to OCC's Rule-Filed Policies

In addition, OCC proposes to make corresponding changes to its Rule-Filed Policies to implement the title changes discussed above. OCC proposes to achieve this by making changes to its Rule-Filed Policies where titles are referenced. OCC proposes to remove the following non-substantive items from its Rule-Filed Policies: Repeated document titles, certain introductory information, related policies and standards, related procedures, and revision history.

In cases where the title of a Rule-Filed Policy is listed twice within the document, OCC proposes to remove a second listing and maintain the title only in the header. OCC proposes to remove the ''Owner'' designations from its Rule-Filed Policies, as applicable. OCC utilizes an internal system of record to manage its policy governance, but as the designated owner of a policy is not a rule and can change, for example if titles or personnel change, OCC believes maintaining this information internally is appropriate and efficient. OCC proposes to maintain the Rule-Filed Policy's approver and date of approval in the introductory header.

As applicable, OCC proposes to remove the related policies and standards and related procedures sections from its Rule-Filed Policies. Lists of related policies, procedures and standards do not constitute a rule and eliminating this information from Rule-Filed Policies will encourage OCC staff to use OCC's internal system of record to identify the policies and procedures that are related to the specific purpose or function that they are performing instead of relying on a list that may be outdated or under inclusive. Finally, OCC proposes to remove the revision history section from its Rule-Filed Policies. Similar to ''Owner'', OCC maintains revision history information in its internal system of record utilized for policy governance.

Below, the above summarized proposed changes are discussed, as applicable, in relation to each of OCC's Rule-Filed Policies. In addition, where titling changes are proposed, those changes are also described.

Capital Management Policy

OCC proposes to remove from its Capital Management Policy the owner listed in the header as well as the revision history section. The policy owner and revision history do not constitute a rule and will continue to be reflected in an internal system of record that OCC uses to manage its policy governance. OCC believes maintaining this information in a single system of record is appropriate, efficient and will reduce the potential for confusion that could arise from maintaining this information in both the system of record and the policy.

Clearing Fund Methodology Policy

OCC proposes to remove from its Clearing Fund Methodology Policy a redundant use of the document title, the owner listed in the header as well as the related policies and standards, related procedures, and revision history sections. The policy owner and revision history do not constitute a rule and will continue to be reflected in an internal system of record that OCC uses to manage its policy governance. OCC believes maintaining this information in a single system of record is appropriate, efficient and will reduce the potential for confusion that could arise from maintaining this information in both the system of record and the policy. Lists of related policies, procedures and standards do not constitute a rule and eliminating this information from the Clearing Fund Methodology Policy will encourage OCC staff to use OCC's internal system of record to identify the policies and procedures that are related to the specific purpose or function that they are performing rather than relying on a list that may be outdated or under inclusive. Accordingly, OCC does not believe lists of related policies, standards and procedures need to be maintained separately within the Clearing Fund Methodology Policy.

OCC also proposes updating two references to the ''Vice President'' title within the document to ''Executive Director'' and one reference to ''EVP–

[11] OCC plans to maintain the positions of Treasurer and Controller; however, these titles will no longer be required by the By-Laws.

FRM'' [12] to ''Chief Financial Risk Officer'' to accurately refer to the corporate title of the person authorized therein.

Collateral Risk Management Policy

OCC proposes to remove from its Collateral Risk Management Policy a redundant use of the document title, the owner listed in the header as well as the related policies and standards, related procedures, and revision history sections. The policy owner and revision history do not constitute a rule and will continue to be reflected in an internal system of record that OCC uses to manage its policy governance. OCC believes maintaining this information in a single system of record is appropriate, efficient and will reduce the potential for confusion that could arise from maintaining this information in both the system of record and the policy. Lists of related policies, procedures and standards do not constitute a rule and eliminating this information from the Collateral Risk Management Policy will encourage OCC staff to use OCC's internal system of record to identify the policies and procedures that are related to the specific purpose or function that they are performing rather than relying on a list that may be outdated or under inclusive. Accordingly, OCC does not believe lists of related policies, standards and procedures need to be maintained separately within the Collateral Risk Management Policy.

Default Management Policy

OCC proposes to remove from its Default Management Policy a redundant use of the document title, the owner listed in the header as well as the related policies and standards, related procedures, and revision history sections. The policy owner and revision history do not constitute a rule and will continue to be reflected in an internal system of record that OCC uses to manage its policy governance. OCC believes maintaining this information in a single system of record is appropriate, efficient and will reduce the potential for confusion that could arise from maintaining this information in both the system of record and the policy. Lists of related policies, procedures and standards do not constitute a rule and eliminating this information from the Default Management Policy will encourage OCC staff to use OCC's internal system of record to identify the policies and procedures that are related to the specific purpose or function that they are performing rather than relying on a list that may be outdated or under inclusive. Accordingly, OCC does not believe a list of related policies, standards and procedures need to be maintained separately within the Default Management Policy.

In addition, OCC proposes adding a header to separately identify existing language describing the applicability and scope of the Default Management Policy. The proposal also includes several non-substances changes intended to correct typographical errors and clarify certain aspects of the policy. OCC also proposes updating one reference to ''Executive Vice President—Financial Risk Management (''EVP–FRM'')'' to ''Chief Financial Risk Officer (''CFRO'')'' in the definition of Designated Officer and deleting a redundant definition of Designated Officer. Finally, OCC proposes updating all uses of ''EVP–FRM'' within the Default Management Policy to ''CFRO.''

Liquidity Risk Management Framework

OCC proposes to remove from its Liquidity Risk Management Framework a redundant use of the document title, the owner listed in the header as well as the revision history section. The policy owner and revision history do not constitute a rule and will continue to be reflected in an internal system of record that OCC uses to manage its policy governance. OCC believes maintaining this information in a single system of record is appropriate, efficient and will reduce the potential for confusion that could arise from maintaining this information in both the system of record and the policy.

OCC also proposes updating one reference to ''EVP–FRM'' to ''Chief Financial Risk Officer'' and simplifying a reference to the ''FRM vice president that chairs the STWG'' [13] to the ''chair of the STWG.''

Margin Policy

OCC proposes to remove from its Margin Policy the owner, rule-filed designation and version number listed in the header as well as the related policies and standards, related procedures, and revision history sections. The policy owner, rule-filed designation, version number and revision history do not constitute a rule and will continue to be reflected in an internal system of record that OCC uses to manage its policy governance. OCC believes maintaining this information in a single system of record is appropriate, efficient and will reduce the potential for confusion that could arise from maintaining this information in both the system of record and the policy. Lists of related policies, procedures and standards do not constitute a rule and eliminating this information from the Margin Policy will encourage OCC staff to use OCC's internal system of record to identify the policies and procedures that are related to the specific purpose or function that they are performing rather than relying on a list that may be outdated or under inclusive. Accordingly, OCC does not believe the list of related documents needs to be maintained separately within the Margin Policy.

OCC also proposes updating one reference to ''Executive Vice President (''EVP'')–FRM'' to ''Chief Financial Risk Officer (''CFRO'').'' Consistent with the change in acronym from ''EVP–FRM'' to ''CFRO,'' OCC proposes updating all uses of ''EVP–FRM'' within the Margin Policy to ''CFRO.'' Finally, OCC proposes updating three references to the ''Vice President'' title within the document to ''Executive Director.''

Model Risk Management Policy

OCC proposes to remove from its Model Risk Management Policy a redundant use of the document title, the owner listed in the header as well as the related policies and standards, related procedures, and revision history sections. The policy owner and revision history do not constitute a rule and will continue to be reflected in an internal system of record that OCC uses to manage its policy governance. OCC believes maintaining this information in a single system of record is appropriate, efficient and will reduce the potential for confusion that could arise from maintaining this information in both the system of record and the policy. Lists of related policies, procedures and standards do not constitute a rule and eliminating this information from the Model Risk Management Policy will encourage OCC staff to use OCC's internal system of record to identify the policies and procedures that are related to the specific purpose or function that they are performing rather than relying on a list that may be outdated or under inclusive. Accordingly, OCC does not believe lists of related policies, standards and procedures need to be maintained separately within the Model Risk Management Policy.

OCC also proposes updating one reference to ''Executive Vice President, Financial Risk Management (''EVP–FRM'')'' within the Model Risk Management Policy to ''Chief Financial Risk Officer (''CFRO'').'' Consistent with the change in acronym from ''EVP–

[12] EVP means Executive Vice President and FRM means OCC's Financial Risk Management Department.

[13] Defined in the Default Management Policy as Stress Test Working Group.

FRM'' to ''CFRO,'' OCC proposes updating all uses of ''EVP–FRM'' within the Model Risk Management Policy to ''CFRO.'' OCC proposes updating three references to the ''First Vice President'' title within the document to ''Executive Director.'' Finally, OCC proposes to allow the CFRO to select a delegate for reviewing and approving Risk Model documentation. The purpose of this change is to allow the CFRO to select the person best suited to review and approve Risk Model documentation.

Risk Management Framework Policy

OCC proposes to remove from its Risk Management Framework Policy a redundant use of the document title, the owner listed in the header as well as the revision history section. The policy owner and revision history do not constitute a rule and will continue to be reflected in an internal system of record that OCC uses to manage its policy governance. OCC believes maintaining this information in a single system of record is appropriate, efficient and will reduce the potential for confusion that could arise from maintaining this information in both the system of record and the policy. OCC also proposes to make several administrative changes to the Risk Management Framework Policy, including correcting typographical errors and updating several cross-references to other policies and procedures.

Third-Party Risk Management Framework

OCC proposes to remove from its Third-Party Risk Management Framework the owner, document type and rule-filed designation listed in the header as well as the revision history section. The policy owner, document type, rule-filed designation and revision history do not constitute a rule and will continue to be reflected in an internal system of record that OCC uses to manage its policy governance. OCC believes maintaining this information in a single system of record is appropriate, efficient and will reduce the potential for confusion that could arise from maintaining this information in both the system of record and the policy. OCC also proposes updating one reference to the ''Vice President'' title within the document to instead refer to Article IV (Officers) of OCC's By-Laws.

Changes to the RWD Plan

OCC also proposes to make corresponding changes to its RWD Plan to implement the title changes described above. This includes: Updating references to ''Treasurer'' to ''Chief Financial Officer;'' updating references to ''Vice President'' to ''Managing Directors, Executive Directors, or Executive Principals;'' revising reference to the members of OCC's Corporate Department to refer to members of OCC's Management Committee, rather than the title of ''Senior Vice President;'' updating references to ''Executive Vice President—Financial Risk Management'' and ''EVP–FRM'' to ''Chief Financial Risk Officer;'' removing references to ''EVP'' and ''SVP'' that are no longer included in titles of OCC's officers with ''Chief'' in their title; removing reference to the SVP, Corporate Communications as a direct report to the Executive Chairman as the leader of Corporate Communications now reports to the Chief External Relations Officer; updating references to ''General Counsel'' to ''Chief Legal Officer and General Counsel;'' updating reference to ''VP Business Continuity'' to ''Business Continuity Department;'' and revising exhibits 2–4, 2–5, and 2–6 to reflect revisions to titles as well as reorganization of certain reporting lines. The proposed revisions promote clarity regarding the responsibilities of OCC's officers and will help ensure that the RWD Plan accurately reflects the titles and reporting lines for OCC's staff.

(2) Statutory Basis

OCC believes the proposed rule change is consistent with Section 17A of the Exchange Act [14] and the rules thereunder applicable to OCC. Section 17A(b)(3)(F) of the Exchange Act [15] requires, among other things, that the rules of a clearing agency be designed to promote the prompt and accurate clearance and settlement of securities transactions and, to the extent applicable, derivative agreements, contracts, and transactions and to assure the safeguarding of securities and funds which are in the custody or control of the clearing or agency or for which it is responsible. The proposed rule change is designed to align the OCC By-Laws, Rules, and Rule-Filed Policies with OCC's governance structure and otherwise enhance the accuracy, clarity, and consistency of the Rule-Filed Policies. The proposed changes would, among other things, help effectuate an organizational design process that OCC has undertaken to enhance the effective operation of OCC's core clearance, settlement, and risk management activities. By ensuring that the OCC By-Laws, Rules, and Rule-Filed Policies accurately reflect the titles and responsibilities for OCC's officers, the proposed changes will support the improved efficacy that this process is expected to achieve. In turn, Exchange Act Rules 17Ad–22(e)(2)(i) and (iv) [16] require each covered clearing agency to establish, implement, maintain, and enforce written policies and procedures reasonably designed to provide for governance arrangements that are clear and transparent and specify clear and direct lines of responsibility. OCC believes that the proposed revisions would help promote clear and transparent governance arrangements in OCC's By-Laws, Rules, and Rule-Filed Policies. OCC aims to achieve this by restructuring the four titles of officers who currently serve as Vice Presidents to three titles. OCC also proposes to recognize in the By-Laws the role of OCC's Chief Financial Officer instead of the roles of Treasurer or Controller to represent the structure of its Corporate Finance Department more clearly. Additionally, OCC believes that it can avoid potential future confusion by removing from its Rule-Filed Policies information that OCC maintains in its system of record and that does not constitute substantive content of the Rule-Filed Policies. These changes involve elements of Rule-Filed Policies that are neither rules nor stated policies, practices or interpretations and removing this information from the Rule-Filed Policies will eliminate inconsistencies that could arise from maintaining it in multiple places with different approval processes. In this way, OCC believes that the proposed rule change is therefore designed, in general, to promote the prompt and accurate clearance and settlement of securities and derivatives transactions and assure the safeguarding of securities and funds which are in the custody or control of OCC or for which it is responsible in accordance with the requirements of Section 17A(b)(3)(F) of the Exchange Act [17] and Rules 17Ad–22(e)(2)(i) and (iv) thereunder.[18]

In addition, Exchange Act Rule 17Ad–22(e)(3)(ii) requires that a covered clearing agency establish, implement, maintain, and enforce written policies and procedures reasonably designed to maintain a sound risk management framework for comprehensively managing legal, credit, liquidity, operational, general business, investment, custody, and other risks that arise in or are borne by the covered clearing agency, which includes plans for the recovery and orderly winddown of the covered clearing agency

[14] 15 U.S.C. 78q–1.

[15] 15 U.S.C. 78q–1(b)(3)(F).

[16] 17 CFR 240.17Ad–22(e)(2)(i).

[17] 15 U.S.C. 78q–1(b)(3)(F).

[18] 17 CFR 240.17Ad–22(e)(2)(i), (iv).

necessitated by credit losses, liquidity shortfalls, losses from general business risk, or any other losses.[19] OCC believes that the proposed changes to the RWD Plan are consistent with Rule 17Ad–22(e)(3)(ii)[20] because they will help ensure that the plan accurately reflects the titles, responsibilities and reporting lines for OCC's staff.

(B) Clearing Agency's Statement on Burden of Competition

Section 17A(b)(3)(I) of the Act[21] requires that the rules of a clearing agency not impose any burden on competition not necessary or appropriate in furtherance of the purposes of the Act. OCC does not believe that the proposed rule change would have any impact or impose any burden on competition. The proposal relates only to changes to OCC's internal management structure with respect to officers who hold the title of Vice President and its derivatives and to recognize OCC's ''Chief Financial Officer'' and have no effect on OCC clearing members. OCC does not believe the proposal would affect access to OCC's services.

(C) Clearing Agency's Statement on Comments on the Proposed Rule Change Received From Members, Participants or Others

Written comments on the proposed rule change were not and are not intended to be solicited with respect to the proposed rule change, and none have been received.

III. Date of Effectiveness of the Proposed Rule Change and Timing for Commission Action

Pursuant to Section 19(b)(3)(A)[22] of the Act, and Rule 19b–4(f)(6) thereunder,[23] the proposed rule change is filed for immediate effectiveness because it does not: (i) Significantly affect the protection of investors or the public interest; (ii) impose any significant burden on competition; and (iii) by its terms would not become operative for 30 days after the date of the filing, or such shorter time as the Commission may designate. As described above, the proposal would narrowly revise the titles of officers within OCC who are Vice Presidents or derivatives of Vice Presidents. In addition, the changes related to identifying the Chief Financial Officer rather than Controller and Treasurer within the By-Laws serve to clarify the officer role that is responsible for OCC's Corporate Finance Department. Furthermore, the proposed changes to OCC's Rule-Filed Policies to align with the revised titles as well as make non-substantive updates do not impact the function of the Rule-Filed Policies. Accordingly, the proposal would not significantly affect the protection of investors or the public interest or impose any significant burden on competition because it is a change to OCC officer structure that has no direct effect on Clearing Members or other users of OCC's services. Additionally, OCC provided the Commission with written notice of its intent to file the proposed rule change, along with a brief description and text of the proposed rule change, at least five business days prior to the date of filing of the proposed rule change or such shorter time as designated by the Commission.

At any time within 60 days of the filing of the proposed rule change, the Commission summarily may temporarily suspend such rule change if it appears to the Commission that such action is necessary or appropriate in the public interest, for the protection of investors, or otherwise in furtherance of the purposes of the Act.[24]

IV. Solicitation of Comments

Interested persons are invited to submit written data, views and arguments concerning the foregoing, including whether the proposed rule change is consistent with the Act. Comments may be submitted by any of the following methods:

Electronic Comments

- Use the Commission's internet comment form (*http://www.sec.gov/rules/sro.shtml*); or
- Send an email to *rule-comments@sec.gov.* Please include File Number SR–OCC–2021–010 on the subject line.

Paper Comments

- Send paper comments in triplicate to Secretary, Securities and Exchange Commission, 100 F Street NE, Washington, DC 20549–1090.

All submissions should refer to File Number SR–OCC–2021–010. This file number should be included on the subject line if email is used. To help the Commission process and review your comments more efficiently, please use only one method. The Commission will post all comments on the Commission's internet website (*http://www.sec.gov/rules/sro.shtml*). Copies of the submission, all subsequent amendments, all written statements with respect to the proposed rule change that are filed with the Commission, and all written communications relating to the proposed rule change between the Commission and any person, other than those that may be withheld from the public in accordance with the provisions of 5 U.S.C. 552, will be available for website viewing and printing in the Commission's Public Reference Room, 100 F Street NE, Washington, DC 20549, on official business days between the hours of 10:00 a.m. and 3:00 p.m. Copies of such filing also will be available for inspection and copying at the principal office of OCC and on OCC's website at *https://www.theocc.com/Company-Information/Documents-and-Archives/By-Laws-and-Rules#rule-filings.*

All comments received will be posted without change. Persons submitting comments are cautioned that we do not redact or edit personal identifying information from comment submissions. You should submit only information that you wish to make available publicly.

All submissions should refer to File Number SR–OCC–2021–010 and should be submitted on or before November 23, 2021.

For the Commission, by the Division of Trading and Markets, pursuant to delegated authority.[25]

J. Matthew DeLesDernier,

Assistant Secretary.

[FR Doc. 2021–23815 Filed 11–1–21; 8:45 am]

BILLING CODE 8011–01–P

[19] *See* Securities Exchange Act Release No. 34–78961 (Oct. 13, 2016), 81 FR 70786, 70808 (Oct. 13, 2016) (File No. S7–03–14).

[20] 17 CFR 240.17Ad–22(e)(3)(ii).

[21] 15 U.S.C. 78q–1(b)(3)(I).

[22] 15 U.S.C. 78s(b)(3)(A)(iii).

[23] 17 CFR 240.19b–4(f)(6).

[24] Notwithstanding its immediate effectiveness, implementation of this rule change will be delayed until this change is deemed certified under CFTC Regulation 40.6.

[25] 17 CFR 200.30–3(a)(12).

SECURITIES AND EXCHANGE COMMISSION

[Release No. 34–93433; File No. SR–OCC–2021–802]

Self-Regulatory Organizations; The Options Clearing Corporation; Notice of Filing and Extension of Review Period of Advance Notice Relating to OCC's Adoption of Cloud Infrastructure for New Clearing, Risk Management, and Data Management Applications

October 27, 2021.

Pursuant to Section 806(e)(1) of Title VIII of the Dodd-Frank Wall Street Reform and Consumer Protection Act, entitled Payment, Clearing and

Settlement Supervision Act of 2010 (''Clearing Supervision Act'')[1] and Rule 19b–4(n)(1)(i)[2] under the Securities Exchange Act of 1934 (''Exchange Act'' or ''Act''),[3] notice is hereby given that on October 8, 2021, the Options Clearing Corporation (''OCC'') filed with the Securities and Exchange Commission (''SEC'' or ''Commission'') an advance notice as described in Items I, II and III below, which Items have been prepared primarily by OCC. The Commission is publishing this notice to solicit comments on the advance notice from interested persons and to extend the review period of the advance notice.

I. Clearing Agency's Statement of the Terms of Substance of the Advance Notice

This advance notice is submitted in connection with a proposed adoption of Cloud infrastructure for OCC's new clearing, risk management, and data management applications with an on-demand network of configurable information technology resources running on virtual infrastructure hosted by a third party. The proposed changes are described in detail in Item II below. All terms with initial capitalization not defined herein have the same meaning as set forth in OCC's By-Laws and Rules.[4]

II. Clearing Agency's Statement of the Purpose of, and Statutory Basis for, the Advance Notice

In its filing with the Commission, OCC included statements concerning the purpose of and basis for the advance notice and discussed any comments it received on the advance notice. The text of these statements may be examined at the places specified in Item IV below. OCC has prepared summaries, set forth in sections A and B below, of the most significant aspects of these statements.

(A) Clearing Agency's Statement on Comments on the Advance Notice Received From Members, Participants or Others

Written comments were not and are not intended to be solicited with respect to the advance notice and none have been received. OCC will notify the Commission of any written comments received by OCC.

(B) Advance Notices Filed Pursuant to Section 806(e) of the Payment, Clearing, and Settlement Supervision Act

Description of the Proposed Change

OCC is proposing to adopt an on-demand network of configurable information technology resources running on infrastructure (''Cloud'' or ''Cloud Infrastructure'') hosted by a third party (''Cloud Service Provider'' or ''CSP'') to support OCC's new core clearing, risk management, and data management applications. OCC will provision logically isolated sections of the Cloud Infrastructure that will provide it with the virtual equivalent of physical data center resources (''Virtual Private Cloud''),[5] including scalable resources that: (i) Handle various computationally intensive applications with load-balancing and resource management (''Compute''); (ii) provide configurable storage (''Storage''); and (iii) host network resources and services (''Network''). Additionally, OCC will maintain an on-premises data center to enable OCC to support core clearing, risk management, and data management applications in the event of a multi-region outage of Compute, Storage, and Network services impacting OCC operations at the CSP.

Background

ENCORE, consisting of OCC's core clearing, risk management, and data management applications running in traditional data centers, was launched in 2000 and has operated as OCC's real-time processing engine receiving trade and post-trade data from a variety of sources on a transaction-by-transaction basis, maintaining clearing member positions, calculating margin and clearing fund requirements, and providing reporting to OCC staff, regulators, and clearing members. Two geographically diverse on-premises data centers located in Illinois and Texas house the Compute, Storage, and Network resources required to run all of these applications.[6]

As the platform running OCC's core applications for approximately twenty years, ENCORE has accommodated growth in average daily transaction volumes[7] and OCC has managed periods of extreme market volatility and stress, including during the 2007–2008 financial crisis and the COVID–19 global pandemic of 2020–21, without incident. Nevertheless, as ENCORE was designed to operate in traditional on-premises data centers that require the acquisition and installation of additional hardware and systems software to accommodate scaled resources or new applications, the resiliency and scalability of the current infrastructure is less flexible than that offered by Cloud Infrastructure. OCC's objective is the retirement of ENCORE and its replacement with a resilient solution that meets market participants' needs and the regulatory expectations of a systemically important financial market utility (''SIFMU''). Given advances in Cloud technology and information security since 2000, OCC's proposed adoption of Cloud Infrastructure will offer more resiliency, security, and scalability.

Proposed Changes

Proposed Cloud Infrastructure. Cloud implementation will enable OCC to leverage the Compute, Storage, and Network capabilities of a CSP, supplemented with compatible third-party vendor solutions, to maintain a modular architecture with delineated domains that will result in (i) improved resiliency, (ii) enhanced security, and (iii) increased scalability for OCC's new core clearing, risk management, and data management applications.[8] Additionally, OCC will maintain an on-premises data center to support core clearing, risk management, and data management services in the event of a multi-region outage at the CSP that impacts OCC operations.

i. Improved Resiliency

As a SIFMU, OCC must ensure core applications on the Cloud Infrastructure have resiliency and recovery capabilities commensurate with OCC's

[1] 12 U.S.C. 5465(e)(1).

[2] 17 CFR 240.19b–4(n)(1)(i).

[3] 15 U.S.C. 78a *et seq.*

[4] OCC's By-Laws and Rules can be found on OCC's public website: *https://www.theocc.com/Company-Information/Documents-and-Archives/By-Laws-and-Rules.*

[5] The Virtual Private Cloud is the virtual equivalent of a traditional data center, albeit with the scalability benefits of the CSP's infrastructure. The Virtual Private Cloud will provide OCC with a dedicated and secure space within the Cloud for OCC to operate.

[6] OCC is not proposing changes to these services in connection with this Advance Notice. As appropriate, OCC will file proposals related to processing enhancements contemplated by the new core clearing, risk management, and data management applications separately. *See, e.g.,* Securities Exchange Act Release No. 88654 (Apr. 15, 2020), 85 FR 22197, 98 n.7 (Apr. 21, 2020) (File No. SR–OCC–2020–004) (stating that a proposed rule change was designed to help facilitate the ability to run OCC's current clearing system, known as ENCORE, in parallel with a new clearing system on which OCC is working).

[7] As of September 30, 2021, approximately 38,846,212 contracts per day were processed through the clearing and risk applications on ENCORE, an increase of over 34.6% of daily contract volume for the same date of the prior year, which itself represented approximately a 50% increase of daily contract volume from the prior year.

[8] OCC has separately submitted a request for confidential treatment to the Commission regarding a diagram that depicts the future state architecture following conclusion of the proposed Cloud Implementation, which OCC has provided in confidential Exhibit 3a to File No. SR–OCC–2021–802.

importance to the functioning of the US financial markets.[9] As explained in more detail below, OCC believes the Cloud Implementation will enhance the resiliency of OCC's core clearing, risk management, and data management applications by virtue of OCC's architectural design decisions and the Cloud's built-in redundancy, guarantee of persistent availability, and disciplined approach to deployment of Cloud Infrastructure. In particular, the Cloud Implementation will enhance OCC's ability to withstand and recover from adverse conditions by provisioning redundant Compute, Storage, and Network resources in three zones in each of two autonomous and geographically diverse regions. This will afford OCC six levels of redundancy in the Cloud with a primary and secondary Virtual Private Cloud running in a hot/warm configuration. The hot Virtual Private Cloud will be operational and accepting traffic, while the warm Virtual Private Cloud will simultaneously receive the same incoming data and receive replicated data from the hot Virtual Private Cloud with applications on stand-by. This solution significantly reduces operational complexity, mitigates the risk of human error, and provides resiliency and assured capacity. Finally, the on-premises data center will operate as a separate, logically isolated backup to the six levels of redundancy provided for in the Cloud—a backup to backups. The on-premises data center will also simultaneously receive incoming data and the replicated data from the CSP hosted Virtual Private Clouds. The on-premises data center is intended to be used only in the unlikely and extraordinary event that OCC completely loses access to the CSP.

ii. Enhanced Security

The physical and cyber security standards that OCC has designed to align with the National Institute of Standards and Technology (''NIST''), Cyber Security Framework (''CSF''), and Center for Internet Security (''CIS'') benchmarks will not change in the Cloud Infrastructure. OCC will add meaningful security capabilities and measures provided by the CSP and selected third-party tools to enhance the security of OCC's core clearing, risk management, and data management applications.[10] Given the scope of their service, CSPs leverage economies of scale and offer infrastructure and services with specialized configuration, monitoring, prevention, detection, and response tools.[11] Furthermore, unique Cloud-specific capabilities, such as services for provisioning credentials and end-to-end configuration change management and scanning, will provide OCC enhanced levels of protection not available in traditional on-premises solutions. Finally, the on-premises data center will be physically isolated from other on-premises networks, such as the development network, with consistent controls and equivalent security tools to that of the Virtual Private Clouds. Specific security-based risks are examined in more detail below.

iii. Increased Scalability

The Cloud Implementation will allow for more scalability of Compute, Network, and Storage resources that support OCC's core clearing, risk management, and data management applications.[12] With a Cloud Infrastructure, OCC can quickly provision or de-provision Compute, Storage, or Network resources to meet demands, including elevated trade volumes, and provide more flexibility to model and create development and test environments for back testing and stress testing, as well as other systems development needs. For example, the CSP can support elastic workloads and scale dynamically without the need for OCC to procure, test, and install additional servers or other hardware. This means that OCC may increase Compute capacity in one or both regions where it operates via manual or automated processes for core clearing, risk management, and data management applications. The rapid deployment of Compute capacity will allow OCC to obtain access to resources far more quickly than with existing physical data centers. The efficiency gains from the increased scalability of the Cloud Infrastructure will allow OCC to run certain back testing processes at a fraction of the time currently required. These and additional efficiency gains are discussed in more detail below.

Implementation Timeframe

OCC expects to launch the new core clearing, risk management, and data management applications into production no earlier than April 1, 2024. The proposed timeline to launch includes several milestones, such as connectivity testing in the first quarter of 2023, external testing in the second quarter of 2023, and certification of readiness from clearing members and exchanges in the first quarter of 2024. OCC will communicate frequently with stakeholders during this timeframe and will confirm the production implementation date of the proposed launch by Information Memorandum posted to its public website at least eight weeks prior to implementation.[13]

Anticipated Effect on and Management of Risk

Federal Financial Institutions Examination Council Cloud Computing Guidance

On April 30, 2020, the Federal Financial Institutions Examination Council (''FFIEC'')[14] issued a joint statement to address the use of Cloud computing services and security risk management principles in the financial services sector (''FFIEC Guidance'').[15] While the FFIEC Guidance does not contain regulatory obligations, it highlights risk management practices that financial institutions should adopt for the safe and sound use of Cloud computing services in five broad areas

[9] In this context, ''resiliency'' is the ''ability to anticipate, withstand, recover from, and adapt to adverse conditions, stresses, attacks, or compromises on systems that include cyber resources.'' *Systems Security Engineering: Cyber Resiliency Considerations for Engineering of Trustworthy Secure Systems,* Spec. Publ. NIST SP No. 800–160, vol. 2 (2018).

[10] Examples of enhanced cloud security capabilities include automated infrastructure deployment that is monitored for change, creating a standardized baseline; default separation between SCI and non-SCI operating domains; and automated and ubiquitous encryption.

OCC has separately submitted a request for confidential treatment to the Commission regarding the Future State: CSP and On-Premises Security Architecture, which OCC has provided in confidential Exhibit 3b to File No. SR–OCC–2021–802.

[11] For example, CSPs generally build infrastructure capable of withstanding Distributed Denial of Service (''DDoS'') attacks to far greater magnitudes than any one company can. In February 2020, one CSP stated that its infrastructure was targeted by and withstood a sustained DDoS attack of up to 2.3 terabytes per second.

[12] OCC will continue to follow existing policies and procedures regarding capacity planning and change management. OCC periodically performs capacity and availability planning analyses that result in capacity baselines and forecasts, as an input to technology delivery and strategic planning to ensure cost-justifiable support of operational business needs. These analyses are based on the collection of performance data, trending, scenarios, and periodic high-volume capacity stress tests and include storage capacity for log and record retention. Results are reported to technology and security leadership as input to performance management and investment planning.

[13] See, ''Timeline to Launch,'' available at: *https://www.theocc.com/Participant-Resources.*

[14] The Council is a formal interagency body empowered to prescribe uniform principles, standards, and report forms for the federal examination of financial institutions by the Board of Governors of the Federal Reserve System, the Federal Deposit Insurance Corporation, the National Credit Union Administration, the Office of the Comptroller of the Currency, and the Consumer Financial Protection Bureau, and to make recommendations to promote uniformity in the supervision of financial institutions.

[15] Available at: *https://www.ffiec.gov/press/pr043020.htm.*

(''FFIEC Risk Management Categories''). As discussed in the next section, the OCC is implementing practices for its proposed Cloud deployment consistent with this guidance.

- *Governance:* Strategies for using Cloud computing services as part of the financial institution's information technology strategic plan and architecture.
- *Cloud Security Management:* (i) Appropriate due diligence and ongoing oversight and monitoring of CSP's security; (ii) contractual responsibilities, capabilities, and restrictions for the financial institution and CSP; (iii) inventory process for systems and information assets residing in the Cloud; (iv) security configuration, provisioning, logging, and monitoring; (v) identity and access management (''IAM'') and network controls; (vi) security controls for sensitive data; and (vii) information security awareness and training programs.
- *Change Management:* (i) Change management and software development lifecycle processes and (ii) security and reliability of microservice [16] architecture.
- *Resiliency and Recovery:* (i) Business resiliency and recovery capabilities and (ii) incident response capabilities.
- *Audit and Controls Assessment:* (i) Regular testing of financial institution controls for critical systems; (ii) oversight and monitoring of CSP-managed controls; and (iii) oversight and monitoring of controls unique to Cloud computing services, including those related to (a) management of the virtual infrastructure; (b) use of containers in the Cloud Infrastructure; (c) use of managed security services for the Cloud Infrastructure; (d) consideration of interoperability and portability of data and services; and (e) data destruction or sanitization.

Governance

OCC's ongoing Cloud Implementation is a natural progression of its information technology strategy and aligns seamlessly with its overall corporate strategy. OCC's information technology strategy fully supports OCC's corporate strategy to: (i) Reinforce OCC's foundational capabilities and deliver effective and efficient services; (ii) deliver product and service enhancements that enable growth in OCC's core capabilities and provide capital efficiencies to market participants; and (iii) demonstrate thought leadership in the delivery of innovative solutions that provide long-term value and efficiencies for OCC and its stakeholders. The corporate strategy is fortified by six guiding principles: (i) Operating solutions that deliver reliability, predictability, and integrity; (ii) designing efficiency into OCC processes through automation and near-frictionless capabilities; (iii) providing outcome-focused solutions; (iv) prioritizing collaboration and accountability within the information technology team; (v) ensuring protection for OCC, its clearing members, and the broader financial market; and (vi) incorporating a ''continuous learning'' mindset.

As a SIFMU and the only provider of clearance and settlement services for listed options in the US, it is vital that OCC's critical services remain continuously available with sufficient security measures in place to detect and defend against possible security threats. The Cloud Implementation will present OCC with an agile operating environment that can scale throughput to match workloads nearly instantaneously and that will enable OCC to build a ''secure by design'' pervasive security methodology that incorporates the NIST Cybersecurity Framework's functions, categories, and subcategories as a roadmap for Cloud security. Movement to an agile, Cloud-based operating environment further reinforces OCC's commitment to building in a comprehensive and adaptable risk-based security methodology instead of a traditional perimeter-centric model.

OCC's Cloud Implementation does not alter OCC's responsibility to maintain compliance with applicable regulations. Consistent with FFIEC Guidance, OCC's plan for Cloud Implementation supports OCC's ability to comply with the SEC's Regulation Systems, Compliance, and Integrity (''Reg SCI'') [17] and the CFTC's Systems Safeguards.[18] Reg SCI imposes certain information security and incident reporting standards on OCC and requires OCC to adopt an information technology governance framework reasonably designed to ensure that ''SCI systems,'' and for purpose of security, ''indirect SCI systems,'' have adequate levels of capacity, integrity, resiliency, availability, and security.[19] As the ''SCI Entity,'' OCC remains solely responsible for meeting all Regulation SCI obligations.[20] Similarly, Systems Safeguards requires OCC to have cybersecurity programs with risk analysis and oversight that ensure automated systems are secure, reasonably reliable, and have adequate scalable capacity. Within its agreement with the CSP (''Cloud Agreement''), OCC has established obligations on the CSP to provide support for OCC's compliance with all applicable regulations.[21]

OCC believes the combination of the following provides OCC reasonable assurance that the proposed Cloud Implementation would enable OCC to continue to fully satisfy its Regulation SCI obligations: (i) The Cloud Agreement; (ii) CSP's compliance programs as described in its Whitepapers [22] and publicly available policies (*e.g.,* its Penetration Testing Policy), user guides, and other documents; (iii) CSP's Service Level Agreements; (iv) CSP's Systems Organization Controls reports (*e.g.,* SOC 1, SOC 2, SOC 3) and ISO certifications (*e.g.,* ISO 27001); (v) CSP's size, scale, and ability to deploy extensive resources to protect and secure its

[16] OCC's use of microservices include specialized third-party applications and a set of containers that work together to compose an application. A container 'holds' both an application and all the elements the application needs to run properly, including system libraries, system settings, and other dependencies. *See Application Container Security Guide,* NIST SP 800–190.

[17] 17 CFR 242.1000 *et seq.*

[18] 17 CFR 39.18 *et seq.*

[19] *See* 17 CFR 242.1001(a). SCI Systems are ''all computer, network, electronic, technical, automated, or similar systems of, or operated by or on behalf of, an SCI entity that, with respect to securities, directly support trading, clearance and settlement, order routing, market data, market regulation, or market surveillance.'' Indirect SCI Systems are ''systems of, or operated by or on behalf of, an SCI entity that, if breached, would be reasonably likely to pose a security threat to SCI systems.''

[20] References herein to ''Shared Responsibility'' conveys the responsibility of OCC and the CSP vis-à-vis each other from a business operations perspective and it not intended to suggest the CSP has taken on, or that OCC has relinquished, any of OCC's Reg SCI compliance requirements.

[21] OCC has separately submitted a request for confidential treatment to the Commission regarding the Cloud Agreement. OCC has provided these documents in confidential Exhibit 3c to File No. SR–OCC–2021–802, confidential Exhibit 3d to File No. SR–OCC–2021–802, confidential Exhibit 3e to File No. SR–OCC–2021–802, and confidential Exhibit 3f to File No. SR–OCC–2021–802. Among other things, the Cloud Agreement sets forth the CSP's responsibility to maintain the hardware, software, networking, and facilities that run the Cloud services. *See also* the separately submitted Table of Reg SCI Provisions, confidential Exhibit 3g to File No. SR–OCC–2021–802 that provides a summary of the terms and conditions of the Cloud Agreement that OCC believes enables OCC to comply with Reg SCI.

[22] OCC has separately submitted requests for confidential treatment to the Commission regarding two examples of CSP Whitepapers, which OCC has provided in confidential Exhibit 3h to File No. SR–OCC–2021–802 and confidential Exhibit 3i to File No. SR–OCC–2021–802.

facilities and services;[23] and (vi) CSP's commercial incentive to perform.

OCC and the CSP rely on the shared responsibility model, which differentiates between the security ''of'' the Cloud and security ''in'' the Cloud.[24] The CSP maintains sole responsibility and control over the security ''of'' the Cloud, and their customers are responsible for the security ''in'' the Cloud; *i.e.,* security of hosted applications and data. Thus, OCC remains responsible for managing and maintaining the operating system and all applications, including security and patching, running in the Cloud. There is no primary/secondary relationship as each partner has a specific set of responsibilities which, when combined, address the entire risk space.

The CSP performs its own risk and vulnerability assessments of the CSP infrastructure on which OCC will run its core clearing, risk management, and data management applications. In published documentation and in meetings conducted with members of CSP's staff, the CSP asserts that it maintains an industry-leading automated test system, with strong executive oversight, and conducts full-scope assessments of its hardware, infrastructure, internal threats, and application software. The CSP asserts that it has an aggressive program for conducting internal adversarial assessments (Red Team) designed not only to evaluate system security but also the processes used to monitor and defend its infrastructure. The CSP also uses external, third-party assessments as a cross-check against its own results and to ensure that testing is conducted in an independent fashion. Per the CSP's documentation, results of these processes are reviewed weekly by the CSP CISO and the CEO with senior CSP leaders to discuss security and action plans.[25]

OCC has the responsibility to perform risk assessments and technical security testing, including control validation, penetration testing, and adversarial testing, of OCC applications running on the CSP. This includes testing of the application interface layer of some CSP provided services such as storage and key management. OCC's security testing model will remain as it is for the on-premises operations: The Security Engineering team will define security control requirements and validate their correct implementation on OCC systems and deployed core clearing, risk management, and data management applications; automated tools will be used to scan OCC application code and open source for security defects during the development process; and automated vulnerability management tools will conduct periodic scans of deployed software and devices to ensure that security patches and fixes are correctly implemented within required timelines.

As mentioned, OCC's testing includes assessing the configuration of CSP provided services: Security Services will work with Information Technology staff to ensure that CSP tools are configured to appropriately manage and mitigate potential sources of risk and will assess the effectiveness of those configurations. The OCC Red Team will operate freely ''in the Cloud,'' attempting to subvert or circumvent controls; their testing will include probing of CSP provided services to look for weaknesses in OCC's deployment of those tools.

Security Services will routinely report test results to Enterprise Risk Management, appropriate functional Operations and Information Technology management, senior management, and the Board of Directors. Automated vulnerability scanning reports, source code analysis, and results of specific assessments will be risk-rated and assigned a priority for remediation in accordance with OCC policy.

Management and oversight of the Cloud Implementation follows standard governing principles for large information technology projects. OCC's Board of Directors has established a Technology Committee to assist the Board of Directors in overseeing OCC's information technology strategy and other company-wide operational capabilities. The Risk and Technology Committees are responsible for different aspects of the oversight of the Cloud Implementation. Information Technology and Security Services, in collaboration with Enterprise Risk Management, are responsible for the identification, management, monitoring, and reporting on the risks associated with the Cloud Implementation. To that end, management presents the Technology Committee (with copies to the Risk Committee and the Board of Directors) with reports on the status and progress of the Cloud Implementation on at least a quarterly basis. This report includes an overall risk and issue summary and an analysis of key risk indicators for the Cloud Implementation.[26] Finally, OCC's Internal Audit Department is responsible for auditing security controls and configurations, including those related to the Cloud, prior to OCC's planned Cloud Implementation. Starting in 2021 and going forward, the Internal Audit Annual Plan is designed to assess important elements of the new core clearing, risk management, and data management application roll-out. For example, the 2021 Audit Plan includes an audit on the Cloud Implementation. These audits will help assess OCC's readiness for the Cloud Implementation as discussed below, in ''Audit and Controls Assessment.''

Cloud Security Management

OCC has established a robust Cloud security program to both: (i) Manage the security of the core clearing, risk management, and data management applications that will be running on the Cloud Infrastructure hosted by the CSP, and (ii) assess and monitor the CSP management of security of the Cloud Infrastructure that it operates. The security program is designed to encompass all OCC assets existing in OCC offices, data centers, and within the CSP's Cloud Infrastructure. The security program is built upon enterprise security standards that establish requirements that apply to any technology system as well as any tool that provides technology services. The following paragraphs in this section describe elements of OCC's Cloud security management in the areas of: (i) Network and IAM controls (*e.g.,* determining who is accessing the systems, granting access to the

[23] The OCC has contracted to work with a top-tier CSP that provides Cloud hosting services to Fortune 500 companies and the U.S. Government, amongst many others.

[24] References herein to ''Shared Responsibility'' conveys the responsibility of OCC and the CSP vis-à-vis each other from a business operations perspective and it not intended to suggest the CSP has taken on, or that OCC has relinquished, any of OCC's Reg SCI compliance requirements. *See supra,* footnote 20.

OCC has separately submitted a request for confidential treatment to the Commission regarding a diagram that provides a summary of the ''shared responsibility'' model between OCC and the CSP, which OCC has provided in confidential Exhibit 3j to File No. SR–OCC–2021–802.

[25] The CSP does not provide assessment results to its customers, as doing so would constitute a breach of generally accepted security best practices. Instead, the CSP provides its customers with industry-standard reports—such as SOC2 Type II—prepared by an independent third-party auditor to provide relevant contextual information to its customers. The CSP also conducts periodic audit meetings specifically designed to discuss security concerns with its customers discussed later during the ''CSP Audit Symposium.''

[26] OCC has separately submitted a request for confidential treatment to the Commission regarding an example of this Cloud Implementation risk report, which OCC has provided in confidential Exhibit 3k to File No. SR–OCC–2021–802.

OCC has also submitted a request for confidential treatment to the Commission regarding Risk Appetite Statements and Risk Tolerances for Cloud Services, which OCC has provided in confidential Exhibit 3l to File No. SR–OCC–2021–802.

applications, and then controlling what information they can access); (ii) security governance and controls for sensitive data; (iii) security configuration, provisioning, logging, and monitoring; and (iv) security testing.

i. Network and IAM Controls

OCC recognizes that robust network security configuration and IAM will provide reasonable assurance that users—including OCC employees, market participants, and service accounts for systems [27]—are granted least-privileged access [28] to the network, applications, and data. OCC will use third-party tools to automate appropriate role-based access to the core clearing, risk management, and data management applications running in the Cloud. By enforcing strict separation of duties and least-privileged access for infrastructure, applications, and data, OCC will protect the confidentiality, availability, and integrity of the data.

The maintenance of an on-premises backup data center necessitates additional network controls. The on-premises data center will be physically separate from networks supporting routine business functions, which will make the overall protection of the environment easier simply by eliminating connectivity other than for critical operations. OCC will explicitly provision all connectivity and will manage and mitigate risks through use of jump hosts that are heavily monitored (*e.g.,* data feeds in and out, provisioned mechanisms for the delivery of the software, and a minimum management interface that requires multi-factor authentication for access). This connection model, coupled with limited access via dedicated private circuits, eliminates the most common threat exposures such as internet connectivity and email. The default physical separation defined in the on-premises backup architecture will be overlaid with industry standard monitoring and blocking tools to ensure that lateral movement between SCI and non-SCI environments is controlled in accordance with the risk.

OCC has established IAM requirements that build upon the least-privileged model. As part of the IAM program, all users must be assigned an appropriate enterprise identification. Users will be granted access to systems via a standardized and auditable approval process. The user identifications and granted access will be managed through their full lifecycle from a centralized IAM system maintained and administered by OCC. Role-, attribute-, and context-based access controls will be used as defined by internal standards consistent with industry recommended practices to promote the principles of least-privileged access and separation of duties.

OCC will use and manage third party tools not otherwise provided by nor managed by the CSP for single sign-on and least-privileged access. The network will also include hardware and software to limit and monitor ingress and egress traffic, encrypt data in transmission, and isolate traffic between OCC and the Virtual Private Cloud. Since OCC will continue to provide cryptographic services, including key management, the CSP and other network service providers will not be able to decrypt OCC data either at rest or while in transit.

ii. Security Governance and Controls for Sensitive Data

OCC's data governance framework that applies to the Cloud Implementation is identified within the OCC Enterprise Security Standards.[29] The Enterprise Security Standards address data moving between systems within the Cloud as well as data transiting and traversing both trusted and untrusted networks. For example, the Enterprise Security Standards require a system or Software as a Solution to: (i) Store data and information, including all copies of data and information in the system, in the United States throughout its lifecycle; (ii) be able to retrieve and access the data and information throughout its lifecycle; (iii) for data in the system hosted in the Cloud, encrypt such data with key pairs kept and owned by OCC; (iv) comply with United States federal and applicable state data regulations regarding data location; and (v) enable secure disposition of non-records in accordance with OCC's Information Governance Policy.[30]

Furthermore, OCC policies establish the overall data governance framework applied to the management, use, and governance of OCC information to include digital instantiations, storage media, or whether the information is located, processed, stored, or transmitted on OCC's information systems and networks, public, private, or hybrid Cloud infrastructures, third-party data centers and data repositories, or Software-as-a-Service (SaaS) applications.[31] The Information Classification and Handling Policy classifies OCC's information into three categories. System owners of technology that enable classification and/or labeling of information are responsible for ensuring the correct classification level is designated in the system of record and the applicable controls are enforced. All information requiring disposal is required to be disposed of securely in accordance with all applicable procedures. Sensitive data must be handled in a manner consistent with requirements in the Information Classification and Handling Policy.

OCC will implement key components of a ''zero trust'' control environment, namely ubiquitous authentication and encryption via use of an automated public key infrastructure, coupled with responsive, highly available authentication, authorization tools, and key management strategies to ensure appropriate industry standard security controls are in place for sensitive data both in transit and at rest. External connectivity to OCC systems hosted by the CSP will be provided as it is now, through dedicated private circuits or over encrypted tunnels through the internet. These network links will also have additional security controls, including encryption during transmission and restrictions on network access to and from the Virtual Private Cloud. Additionally, OCC will use dedicated redundant private network connections between OCC data centers and the CSP infrastructure. OCC currently maintains two data centers and will do so in the future to provide redundant, geographically diverse connectivity for market participants. All network communications between OCC and the Cloud Infrastructure will rely on industry standard encryption for traffic while in transit. Data at rest will be safeguarded through pervasive encryption. OCC's Encryption Standards describe requirements for implementation of the minimum required strengths, encryption at rest,

[27] Service accounts are non-interactive accounts that permit application access to support activities such as monitoring, logging, or backup.

[28] Least-privileged access means users will have only the permissioning needed to perform their work, and no more.

[29] OCC has separately submitted a request for confidential treatment to the Commission regarding the Enterprise Security Standards, which OCC has provided in confidential Exhibit 3m to File No. SR–OCC–2021–802. OCC security controls and standards are created, published, and managed in accordance with applicable OCC policies.

[30] OCC has separately submitted a request for confidential treatment to the Commission regarding the Information Governance Policy, which OCC has provided as confidential Exhibit 3n to File No. SR–OCC–2021–802.

[31] OCC has separately submitted a request for confidential treatment to the Commission regarding the Information Classification and Handling Policy, which OCC has provided in confidential Exhibit 3o to File No. SR–OCC–2021–802.

and cryptographic algorithms approved for use in cryptographic technology deployments across OCC.[32] All OCC identifying data is encrypted in transit using industry standard methods. The Key Management Service (''KMS'') Strategy dictates that all CSP endpoints support HTTPS for encrypting data in transit.[33] OCC also secures connections to the endpoint service by using virtual private computer endpoints and ensures client applications are properly configured to ensure encapsulation between minimum and maximum Transport Layer Security (TLS) versions per OCC encryption standard. OCC will have exclusive control over the key management system; only OCC authorized users will be able to access that data. CSP systems and staff will not have access to the OCC certificate management and/or key management system.[34] OCC is responsible for the application architecture, software, configuration and use of the CSP services, and for the maintenance of the environment, including ongoing monitoring of the application environment to achieve the appropriate security posture. To do this, OCC follows: (i) Existing security design and controls; (ii) Cloud-specific information security controls defined in ''Enterprise Security Controls;'' and (iii) regulatory compliance requirements detailed in sources or information technology practices that are widely available and issued by an authoritative body that is a U.S. governmental entity or agency including NIST–CSF, COBIT, and the FFIEC Guidelines.

OCC uses third-party tools for CSP security compliance monitoring, security scanning, and reporting. Alerts and all API-level actions are gathered using both CSP provided and third-party monitoring tools. The CSP provided monitoring tool is enabled by default at the organization level to monitor all CSP services activity. Centralized logging provides near real-time analysis of events and contains information about all aspects of user and role management, detection of unauthorized, security relevant configuration changes, and inbound and outbound communication.

As previously discussed, OCC uses a KMS Strategy to encrypt data in transit and at rest in the Cloud. KMS is designed so that no one, including CSP employees, can retrieve customer plaintext keys and use them. The Federal Information Processing Standards (''FIPS'') 140–2 validated Host Security Modules (HSMs) in KMS protect the confidentiality and integrity of OCC customer keys.[35] Customer plaintext keys are never written to disk and only ever used in protected, volatile memory of the HSMs for the time needed to perform the customer's requested cryptographic operation. KMS keys are never transmitted outside of the Cloud regions in which they were created. Updates to the KMS HSM firmware are controlled by quorum-based access control[36] that is audited and reviewed by an independent group within the CSP. This tightly controlled deployment process minimizes the risk that the security properties of the service will be changed as new software, firmware, or hardware is introduced. With these security measures, only users granted access by OCC to the core clearing, risk management, or data management applications will be able to interact with the information contained therein.

iii. Security Configuration, Provisioning, Logging, and Monitoring

Automated delivery of business and security capability via the use of ''Infrastructure as Code'' and continuous integration/continuous deployment pipeline methods will permit security controls to be consistently and transparently deployed on-demand. OCC will provision Cloud Infrastructure using pre-established system configurations that are deployed through infrastructure as code, then scanned for compliance to secure baseline configuration standards. OCC also employs continuous configuration monitoring and periodic vulnerability scanning. OCC will continue to perform regular reviews and testing of OCC systems running on the Cloud while relying upon information provided by the CSP through the CSP's SOC2 and Audit Symposiums. Finally, configuration, security incident, and event monitoring will rely on a blend of CSP native and third-party solutions.

OCC also plans to use tools offered by the CSP and third-parties to monitor the core clearing, risk management, and data management applications run on the Cloud Infrastructure. OCC will track metrics, monitor log files, set alarms, and have the ability to act on changes to OCC core clearing, risk management, and data management applications and the environment in which they operate.[37] The CSP will provide a dashboard to reflect- general health (*e.g.,* up/down status of a region) but will not give additional insights into performance of services and applications which run on those services. The OCC operated centralized logging system will provide for a single frame of reference for log aggregation, access, and workflow management by ingesting the CSP's logs coming from native detective tools and OCC instrumented controls for logging, monitoring, and vulnerability management. This instrumentation will give OCC a real-time view into the availability of Cloud services as well as the ability to track historical data. By using the enterprise monitoring tools OCC has in place, OCC will be able to integrate the availability and capacity management of Cloud into OCC's existing processes, whether hosted on the Cloud or running in the local on-premises backup, and respond to issues in a timely manner.

OCC will also use specialized third-party tools, as discussed above, to programmatically configure Cloud services and deploy security infrastructure. This automation of configuration and deployment will ensure Cloud services are repeatably and consistently configured securely and validated. Change detection tools providing event logs into the incident management system are also vital for reacting to and investigating unexpected changes to the environment.

Security has implemented tools for the core clearing, risk management, and data management applications and back office environments that will be hosted at the CSP; notably, the IAM system, monitoring and Security Information and Event Management (''SIEM'') systems, the workflow system of record for incident handling, KMS, and enterprise Data Loss Prevention (''DLP''). Most of these services can also be run on-premises in a fully Cloud-independent mode, and Security Services has identified potential alternatives for those that will be needed for isolated on-premises operations and cannot operate

[32] OCC has separately submitted a request for confidential treatment to the Commission regarding the Encryption Standards, which OCC has provided in confidential Exhibit 3p to File No. SR–OCC–2021–802.

[33] OCC has separately submitted a request for confidential treatment to the Commission regarding OCC Key Management Service (KMS) Strategy, which OCC has provided in confidential Exhibit 3q to File No. SR–OCC–2021–802.

[34] Certificate management is the process of creating, monitoring, and handling digital keys (certificates) to encrypt communications.

[35] The HSM is analogous to a safe that only OCC has knowledge of the combination and the ability to access the keys to locks stored within.

[36] A quorum-based access mechanism requires multiple users to provide credentials over a fixed period in order to obtain access.

[37] OCC has separately submitted a request for confidential treatment to the Commission regarding the Draft Cloud Provider Logging and Alerting Test Environment, which OCC has provided in confidential Exhibit 3r to File No. SR–OCC–2021–802.

independently. All required technical controls deployed via or reliant on CSP services will be replaced or supplemented to ensure equivalent independent operation of the on-premises backup.[38]

Finally, the CSP prioritizes assurance programs and certifications, underscoring its ability to comply with financial services regulations and standards and to provide OCC with a secure Cloud Infrastructure.[39]

iv. Security Testing and Verification by the 2nd and 3rd Line

Security testing is integrated into business-as-usual processes as outlined in relevant policy and procedures. These documents define how testing is initiated, executed, and tracked.

For new assets and application (or code) releases, Security determines whether and what type of security testing is required through a risk-based analysis. If required, testing is conducted prior to implementation and the different testing techniques are outlined below:

- *Automated Security Testing:* Using industry standard security testing tools and/or other security engineering techniques specifically configured for each test, Security will test to identify vulnerabilities and deliver payloads with the intent to break, change, or gain access to unauthorized areas within an application, data, or system.
- *Manual Penetration Testing:* Using information gathered from automated testing and/or other information sources, Security will manually test to identify vulnerabilities and deliver payloads with the intent to break, change, or gain access to the unauthorized area within an application or system.
- *Blue Team Testing:* The Blue Team identifies security threats and risks in the operating environment and analyzes the network, system, and SaaS environments and their current state of security readiness. Blue Team assessment results guide risk mitigation and remediation, validate the effectiveness of controls, and provide evidence to support authorization or approval decisions. Blue Team testing ensures that OCCs networks, systems, and SaaS solutions are as secure as possible before deploying to a production environment.

The results of Security controls testing are risk-rated and managed to remediation via the Security Observation Risk Tracking process.

Change Management

Consistent with FFIEC Guidance, OCC's use of the Cloud will have sufficient change management controls in place to effectively transition systems and information assets to the Cloud and will help ensure the security and reliability of microservices in the Cloud. OCC's enterprise software development lifecycle processes help ensure the same control environment for all OCC resources, irrespective of whether they reside in an on-premises environment or in the Cloud. OCC has established baselines for design inputs and control requirements and enforces workload isolation and segregation through a Virtual Private Cloud using existing Cloud native technical controls and added new tools. OCC also plans to use other specialized platform monitoring tools for logging, scanning of configuration, and systems process scanning. OCC also has oversight as a code owner for the OCC infrastructure security containers and will have final review and approval for related changes and code merges before deployment of secure containers into production. Finally, OCC will periodically conduct static code scanning and perform vulnerability scanning for external dependencies prior to deployment in production, along with manual penetration testing of the provided application code. In addition, OCC will perform routine scans of Compute resources with the existing enterprise scanning tools. Any identified vulnerabilities will be reviewed for severity, prioritized, and logged for remediation tracking in upcoming development releases.

OCC will create a ''user acceptance plan'' prior to promoting code to production. This user acceptance plan will include tests of all major functions, processes, and interfacing systems, as well as security tests. Through acceptance tests, OCC users will be able to simulate complete application functionality of the live environment. The change will move to the next stage of the OCC delivery model only after satisfying the criteria for this phase.[40]

OCC plans to use microservices in its use of the Cloud. OCC has internal projects that will address change management of the various microservices. In particular, OCC runs a suite of supporting services that enable building, running, scaling, and monitoring of OCC's business applications in the Cloud in an automated, resilient, and secure manner. The application platform relies on various CSP and third-party tools for different components, including Infrastructure as a Service, Infrastructure as Code, CI/CD, Container as a Service, Continuous Delivery, and Platform Monitoring. For example, OCC will use a third-party tool for managing containers and a different third-party tool for distributing containers and workloads to assist with platform automation. Security measures for planned production microservices are already incorporated within the overall security architecture and Enterprise Security Standards.[41]

With respect to software development in the Cloud, OCC has established a closed Virtual Private Cloud non-production environment that allows OCC to develop, test, and integrate new capabilities, including those related to security enhancements, while preventing direct external access to the development environment and tightly controlling on-premises access from OCC to the non-production environment. This OCC Virtual Private Cloud non-production environment (hosted in the Cloud) focuses on the foundational security, operations, and infrastructure requirements with the intent to take lessons learned to implement into future production. OCC developed and maintains a Cloud Reference Architecture that defines necessary capabilities and controls required to securely host core clearing, risk management, and data management applications on the CSP. The minimum foundational security requirements are based on the NIST CSF and CIS benchmarks and include the design and implementation requirements of a secure Cloud account structure within a multi-region Cloud environment. OCC maintains enterprise security requirements that provide structure for current and future development. As the Virtual Private Cloud environment is further developed and expanded, there is a comprehensive process to identify any incremental risks and develop and

[38] OCC has separately submitted a request for confidential treatment to the Commission regarding the Key Technologies, which OCC has provided in confidential Exhibit 3s to File No. SR–OCC–2021–802.

[39] The CSP has certifications for the following frameworks: NIST, Cloud Security Alliance, Control Objectives for Information and Related Technology (COBIT), International Organization for Standardization (ISO), and the Federal Information Security Management Act (FISMA).

[40] The ''user acceptance plan'' represents only one aspect of the overall change management program at the OCC.

[41] The minimal security control architecture reflects awareness of the need to consider data storage and management outside of containers, configuration management to prevent unintended container interactions, and routine monitoring and replacement of containers when appropriate.

implement controls to manage and mitigate those risks.[42]

Resiliency and Recovery

As noted earlier, given OCC's role as a SIFMU, it is vital that OCC work to ensure operations moved to Cloud Infrastructure have appropriately robust resilience and recovery capabilities. Below is a discussion of how OCC has evaluated resiliency including: (i) The steps taken by OCC and the CSP to help ensure the persistent availability of Compute, Storage, and Network capabilities in the Cloud; (ii) the resiliency of the CSP's method for deploying updates to help ensure that consequences of incidents are limited to the fullest extent possible; (iii) the on-premises backup; and (iv) the use of ''store and forward'' [43] messaging technology.

i. Resiliency of the Cloud Infrastructure

OCC believes the Cloud Implementation will enhance the resiliency of OCC's core clearing, risk management, and data management applications by virtue of its built-in six levels of redundancy that will provide OCC with easy access to multiple zones within multiple and geographically diverse regions. The redundancy provided to OCC in the Cloud Infrastructure helps ensure that Compute, Storage, and Network resources will be available to OCC on a persistent basis.

OCC will provision Compute, Storage, and Network resources in two autonomous and geographically diverse regions, in a hot/warm configuration to increase resources on demand, maintained by the CSP. Each region will maintain independent and identical copies of all applications that are deployed by OCC, allowing OCC to transition its core clearing, risk management, and data management applications from one region to another seamlessly. Production workloads would be run across and shifted between regions regularly to protect OCC against disruptions from regionalized incidents. In the unlikely event that a region is temporarily disabled as a result of an extreme event, OCC would failover to run core clearing, risk management, and data management applications in the other region. This will necessarily require that both regions be maintained with full and expansion capacity. At any point, OCC will have active primary and standby instances of the core clearing, risk management, and data management applications that can be moved to any of the six instances (*i.e.* three zones in each of the two regions). This is analogous to having six physical data centers with primary and backup running out of any two instances at a given point in time.

Each region consists of three zones, each of which has a physical infrastructure with separate and dedicated connections to utility power, standalone backup power sources, independent mechanical services, and independent network connectivity. While not dependent on one another, zones are connected to one another with private fiber-optic networking, enabling the architecture of core clearing, risk management, and data management applications to automatically failover between zones without interruption. Since each zone can operate independently of one another but failover capability is near instantaneous, a loss of one zone will not affect operation in another zone; however, no core clearing, risk management, or data management application will be reliant on the functioning of a single zone. This structural framework offers OCC a wide expanse within which to run its core clearing, risk management, and data management applications while simultaneously restricting the effect of an incident at the CSP to the smallest footprint possible.[44]

As core clearing, risk management, and data management applications will be deployed in a primary (hot)/secondary (warm) mode, each environment will be active, run the same software, and receive the same data, enabling a failover or switch from one region to another within two hours. Software and Infrastructure will be deployed via automated processes to ensure both are identical in each region.

Additional capacity will always be available to support the resiliency of OCC's core clearing, risk management, and data management applications by way of the six-way redundancy. OCC will continue to periodically test the CSP's capacity scaling features and failover capabilities to ensure adequate capacity is always available to OCC.[45]

The CSP may not unilaterally terminate the relationship with OCC absent good cause or without sufficient notice to allow OCC to transition to an alternate CSP or to the on-premises solution for its Compute, Storage, and Network needs. The notice provision in the Cloud Agreement for terminations that are not for cause would give OCC sufficient time to consider and transition [46] its core clearing, risk management, and data management applications to another CSP or to its backup on-premises data center. Specifically, the CSP must provide notice OCC believes is sufficient to transition if it wishes to terminate the Cloud Agreement for convenience or if it wishes to terminate an individual CSP service offering on which OCC relies for all of its Cloud customers.[47]

The CSP is permitted to terminate the Cloud Agreement with shorter notice periods in the event of a critical breach or an uncured material breach of the Cloud Agreement. In the highly unlikely event that a critical breach or uncured material breach occurs, OCC would have sufficient notice to shift operations to the on-premises data center. Contract provisions that allow a party to terminate for uncured material breaches are designed to limit the types of actions that could lead to contract termination (typically, a breach is considered material only if it goes to the root of the agreement between the parties or is so substantial that it defeats the object of the parties in making the contract) and to establish a short period of time to resolve an aggrieved party's claim (often 30 days). This gives the parties time and incentive to address the problem without having to resort to termination. Critical breaches are material breaches: (i) For which OCC knew its behavior would cause a material breach (such as a willful violation of Cloud Agreement

[42] OCC has separately submitted a request for confidential treatment to the Commission discussing the status of security projects which OCC has provided in confidential Exhibit 3t to File No. SR–OCC–2021–802.

[43] ''Store and forward'' messaging refers to messaging technology that retains copies of messages until confirmation of receipt, thus limiting the likelihood of loss during transmission.

[44] To further ensure the resiliency of the Compute, Storage, and Network capabilities, the CSP's services are divided into ''data plane'' and ''control plane'' services. OCC's applications will run using data plane services; control plane services are used by the CSP to configure the environment. Resources and requests are further partitioned into cells, or multiple instantiations of a service that are isolated from each other and invisible to the CSP's customers, on each plane, again minimizing the effect of a potential incident to the smallest footprint possible.

[45] OCC will continue to perform periodic business continuity and disaster recovery tests to verify business continuity plans and disaster recovery infrastructure will support a two-hour recovery time objective for critical systems.

[46] The possible transition of core clearing, risk management, and data management applications either from the CSP back to an on-premises solution or to another CSP is discussed below.

[47] The CSP permits an exception to this sufficient notice provision in the event the CSP must terminate the individual service offering if necessary to comply with the law or requests of a government entity or to respond to claims, litigation, or los [sic] of license rights related to third-party intellectual property rights. In this event, the CSP must provide reasonable notice to OCC of the termination of the individual service offering.

terms); (ii) that cause ongoing material harm to the CSP, its services, or its customers (*e.g.,* criminal misuse of the services); or (iii) for undisputed non-payment under the Cloud Agreement. Even if the CSP notifies OCC of an alleged breach (material or critical), termination of services is not immediate.

OCC believes the risk of termination with a shorter notice period is mitigated by the following factors. In all cases of an alleged breach, the CSP must notify OCC in writing and provide time for OCC to cure the alleged breach (''Notice Period''). With respect to an alleged critical breach, OCC would use the Notice Period to attempt to cure the alleged critical breach while also preparing for a seamless transition to the on-premises data center. With respect to an alleged material breach, which requires the CSP to extend the Notice Period if OCC demonstrates a good faith effort to cure the alleged material breach, OCC would use the Notice Period to attempt to cure the alleged material breach while also preparing for a seamless transition to the on-premises data center. As a result, it is highly unlikely that a critical breach or a material breach would remain uncured beyond the Notice Period; if one does, however, OCC would have ample notice to shift operations to the on-premises data center to avoid a disruption to core clearing, risk management, and data management applications.

ii. Resiliency of the Deployment of Cloud Infrastructure Updates

The CSP will update the Cloud Infrastructure from time to time [48] using a conservative approach for update deployment that helps to ensure that any potential effects of possible incidents are contained to the greatest extent possible. The CSP achieves this by: (i) Fully automating the build and deployment process; and (ii) deploying services to production in a phased manner.

CSP Services are first deployed to cells, which minimizes the chance that a disruption caused by a service update such as a patch in one cell would disrupt other cells. Following a successful cell-based deployment, service updates are next deployed to a specific zone, which limits the potential disruption caused by a service update to that particular zone. Following a successful zone deployment, service updates are then deployed in a staged manner to other zones starting with the same region and later within other regions until the process is complete.

OCC will continue to meet regularly with staff of the CSP, in addition to formal quarterly Briefing Meetings with the CSP as described in the Reg SCI Addendum.[49] The informal discussions and quarterly Briefing Meetings will permit OCC to gather information in advance of the quarterly Systems Change report. Most reportable systems changes will continue to occur based on changes to Compute, Storage, Network, or applications controlled by OCC.

iii. Resiliency Through the Build Out of an On-Premises Data Center

OCC will maintain an on-premises data center to provide the ability to support core clearing, risk management, and data management applications in the unlikely and extraordinary event of either the termination of the Cloud Agreement for uncured breach or a multi-region outage at the CSP that simultaneously impacts OCC operations within all three zones in both regions.[50]

OCC has designed the on-premises data center to operate 30 or more days to permit a smooth transition back to the Cloud (once the Cloud disruption is remediated) on a low volume day. From an architectural perspective, the on-premises data center is similar to adding a third CSP region with a single zone. While most technologies will remain the same with a failover to on-premises, there are several technologies that are only available at the CSP and for which alternative solutions must be devised. All equivalent on-premises core platform technologies that enable Compute, Network, and Storage will be operated by OCC with synchronous data replication between the Cloud and on-premises while member connectivity would remain unchanged.[51] OCC will ensure adequate capacity in the on-premises data center for up to two and a half times observed peak volume. If the circumstances that required OCC to rely on the on-premises data center persist beyond seven days, OCC would take steps necessary to enhance its Storage to enable seamless operation of the on-premises data center for longer than 30 days.

iv. Resiliency Through the Use of ''Store and Forward'' Messaging Technology

OCC has designed the architecture to ensure it is able to support zero message loss and a quick recovery time. To meet these requirements the architecture places a premium on data integrity and throughput over the latency of any one transaction. The established techniques for this are ''store and forward'' messaging technology where messages are preserved until delivered to servers that consume the messages and synchronous writes to multiple servers. Unlike OCC's current system, the core clearing, risk management, and data management applications do not rely on block storage replication across CSP regions. The solution is entirely message based and message replication achieves the data redundancy required to deliver high availability services.

OCC will continue to rely on the existing ''store and forward'' messaging technology as the primary technology for exchanging messages with both exchanges & clearing members for the intake of clearing and settlement related information. The ''store and forward'' messaging technology manager is hosted on-premises and is replicated across all OCC on-premises data centers. The ''store and forward'' messaging technology will then forward messages to the hot/warm instances at the CSP and the redundant on-premises data center applications.

Core clearing, risk management, and data management applications rely on a platform for managing containerized workloads and messaging services. This platform enables multi-region message replication with synchronous acknowledgement. The platform will treat the on-premises data center as another region, with messages being replicated to all three regions (the two Cloud regions and on-premises).

The core clearing, risk management, and data management application architecture deployed across the two CSP regions and on-premises will maximize data integrity and throughput during routine operations and enhance failover should it be necessary.

Audit and Controls Assessment

OCC has a plan in place to continually test the Cloud security controls and OCC's readiness for the Cloud Implementation, and also has processes in place to regularly audit and test security controls and

[48] OCC will continue to retain responsibility for patching, configuration, and monitoring of the operating systems and applications in the Cloud.

[49] *See* confidential Exhibit 3f.

[50] OCC, with the assistance of an external consultant, conducted an analysis of the benefits and risks of a multi-CSP infrastructure. The key findings indicated that a multi-CSP infrastructure would not significant improver resiliency and could create additional risks, including: (i) Increased functionality and delivery risks; (ii) increased operational and cybersecurity risks; (iii) human capital risks; (iv) third-party and legal risks; and (v) general business risks.

[51] OCC has separately submitted a request for confidential treatment to the Commission for a diagram that the presents draft Failover Architecture which OCC has provided in confidential Exhibit 3u to File No. SR–OCC–2021–802.

configurations,[52] including by monitoring the CSP's technical, administrative, and physical security controls that support OCC's systems in the Cloud Infrastructure.

i. Internal Risk Assessments

In addition to existing OCC Third Party Vendor Risk Management activities, OCCs Third Party Risk Management department (''TPRM'') will assess the operational risks of the CSP as a critical vendor annually. Additionally, OCC conducts a technology risk assessment, which is an evaluation of risks to OCC's critical systems, monitoring of key risk indicators (''KRI''), risk events, security events, and key controls, and which will encompass all risks presented by the CSP, on an annual basis.[53]

ii. External Risk Assessment

OCC engaged a third-party familiar with Cloud Infrastructure best practices to conduct a design effectiveness review of the OCC's proposed Cloud strategy, application architecture, and related security and resiliency controls.[54] The External Risk Assessment focused on: (i) Cloud reference architecture, capabilities, and controls required to host applications in the Cloud; (ii) existing and planned resiliency capabilities to meet a two-hour recovery time objective of OCC's critical services; and (iii) design of the existing and planned security controls during and after the Cloud Implementation.[55]

The External Risk Assessment identified strengths in OCC's planned Cloud Implementation, including that OCC incorporated several leading security practices as well as support for elastic capacity and the ability to scale effectively into its plan. The External Risk Assessment also included recommendations to supplement OCC's execution plan for the Cloud Implementation and were broadly categorized into six technical areas: (i) Workload isolation and networking; (ii) automation and pipelines; (iii) data fabric and data lifecycle management; (iv) platform shared services and support model; (v) security shared services and support model; and (vi) resiliency. Recommendations were categorized across two dimensions: (i) Program priority (high, medium, or low) and (ii) implementation action (start, accelerate, or continue). A recommendation does not necessarily mean OCC would not have implemented the recommended action absent the recommendation, as several of the recommendations were for OCC to continue an activity it had already begun. OCC has a plan in place to address the recommendations provided in the External Risk Assessment and will track the plan to completion.

iii. Internal Audit Department Plan Related to Cloud Implementation

As mentioned above, starting in 2021 and going forward, the Internal Audit Annual Plan is designed to assess important elements of the new core clearing, risk management, and data management applications roll-out. For example, the 2021 Audit Plan includes an audit on the Cloud Implementation. This audit included an analysis of OCC's disposition of the findings in the External Risk Assessment, determined if the risks associated with findings have been adequately addressed, evaluated OCC's strategy in the event it needs to transition from the CSP at any time, evaluated the adequacy of OCC's remediation plans and timelines, and OCC's assessment of the third-party CSP attestation report (SOC). The Internal Audit Department plans to augment internal resources with co-source resources with specific expertise in Cloud-based controls and has conducted a department-wide training of Cloud auditing, with additional training to be conducted as necessary.

iv. Audit Symposium and Access Rights

The CSP hosts an annual Audit Symposium, which will allow OCC to review evidence supporting the CSP's control environment. The CSP also hosts an annual Cloud security conference focused on Security, Governance, Risk and Compliance.

OCC Information Technology staff currently meets with CSP representatives weekly to focus on technical issues related to OCC's proposed Cloud environment. In addition, OCC will be holding compliance briefings with the CSP quarterly, wherein the CSP will provide OCC with documentation (*e.g.,* SOC 2 Report) and assist OCC's preparation for the Audit Symposium. OCC management, including Security, Information Technology, and the Internal Audit Department, will coordinate to ensure appropriate representation during the planned briefings. TPRM will help initiate and orchestrate the annual reviews.

v. Key Risk and Key Performance Indicators

OCC has also established several key risk indicators (''KRI'') and key performance indicators (''KPI'') to evaluate OCC's management of risk and the CSP's performance during the Cloud implementation and ongoing operation.[56] The KRIs are approved by and regularly reported to OCC's Management Committee, Board of Directors, and the Risk Committee of the Board of Directors.

OCC has developed Cloud KPIs and socialized these KPIs internally. The KRIs already exist for core clearing, risk management, and data management applications and are aligned to overall systems availability, capacity, data integrity, and security. The CSP KPIs feed into existing KRIs and will continue to be used to evaluate the CSP's performance after the Cloud Implementation.[57] KPIs will be added to monitor the performance and risks of the CSP services for which OCC has contracted. These post-Cloud Implementation KRIs and KPIs will allow OCC to assess its ongoing use of the CSP against its operational and security requirements and will demonstrate the effectiveness of risk controls and the CSP's performance against commitments in the Service Level Agreements, and will be reported on a regular basis to OCC's Management Committee, Board of Directors, and Technology and Risk Committees of the Board of Directors.[58]

[52] Internal Audit will assess plans during the 2021 Cloud Transition Audit, and more in-depth in early 2022 when the processes are modified to operate in the Cloud.

[53] This annual risk assessment is provided to the Board of Directors and the Technology Committee.

[54] OCC has separately submitted a request for confidential treatment to the Commission regarding the External Risk Assessment, which OCC has provided in confidential Exhibit 3v to File No. SR–OCC–2021–802 and regarding OCC's response to the External Risk Assessment recommendations, which OCC has provided in confidential Exhibit 3w to File No. SR–OCC–2021–802.

[55] The External Risk Assessment included five discovery workshops, thirty design review sessions, discussions with over forty-eight OCC stakeholders, and review of one hundred sixty documents ranging from strategy materials to configuration builds.

[56] These KRIs and KPIs are contained in the Cloud Implementation risk report. OCC has separately submitted a request for confidential treatment to the Commission regarding the Cloud Implementation risk report, which OCC has provided in confidential Exhibit 3k to File No. SR–OCC–2021–802. *See supra* note 26.

[57] OCC has established metrics for monitoring CSP systems capacity and availability in each zone in Risk Appetite Statements and Risk Tolerance for Cloud Services which OCC has provided in confidential Exhibit 3l to File No. SR–OCC–2021–802. Data integrity and systems incidents are monitored through OCC's Quality Standards Program and Systems Incident Program, respectively.

[58] OCC has separately submitted a request for confidential treatment to the Commission regarding metrics and reporting that OCC will use to monitor the security and performance of the CSP after adoption, which OCC has provided in confidential Exhibit 3x to File No. SR–OCC–2021–802.

vi. Auditing the CSP Post Cloud-Implementation

OCC's Cloud Agreement gives OCC the right to attend the CSP Audit Symposium annually so that OCC may inspect and verify evidence of the design and effectiveness of the CSP's control environment and physical security controls in place at the CSP's data centers. Through preparation for and attendance at this symposium, OCC may also provide feedback and make requests of the CSP for future modifications of the control environment. The CSP is also required to maintain an information security program, including controls and certifications, that is as protective as the program evidenced by the CSP's SOC–2 report. The CSP must make available on demand to OCC its SOC–2 report as well as the CSP's other certifications from accreditation bodies and information on its alignment with various frameworks, including NIST, CSF, and ISO.[59] TPRM will coordinate an annual risk assessment of OCC's relationship with the CPS. TPRM, Security, and Business Continuity will determine the adequacy and reasonableness of the documentation received to complete the Third-Party Risk Assessment. Finally, the Cloud Agreement provides that OCC's regulators may visit the facilities of the CSP under specified conditions.

OCC plans to use the CSP's services combined with additional third-party tools to monitor systems deployed by ingesting logs into a security incident and event monitoring tool to provide a single pane of glass view into the Cloud Infrastructure (and the on-premises data center to the extent it is used). When incidents are detected, OCC will follow its existing incident response governance to identify, detect, contain, eradicate, and recover from incidents.

Consistency With the Payment, Clearing and Settlement Supervision Act

The stated purpose of the Clearing Supervision Act is to mitigate systemic risk in the financial system and promote financial stability by, among other things, promoting uniform risk management standards for systemically important financial market utilities and strengthening the liquidity of systemically important financial market utilities.[60] Section 805(a)(2) of the Clearing Supervision Act[61] also authorizes the Commission to prescribe risk management standards for the payment, clearing and settlement activities of designated clearing entities, like OCC, for which the Commission is the supervisory agency. Section 805(b) of the Clearing Supervision Act[62] states that the objectives and principles for risk management standards prescribed under Section 805(a) shall be to:

- Promote robust risk management;
- promote safety and soundness;
- reduce systemic risks; and
- support the stability of the broader financial system.

The Commission has adopted risk management standards under Section 805(a)(2) of the Clearing Supervision Act and the Exchange Act in furtherance of these objectives and principles.[63] Rule 17Ad–22 requires registered clearing agencies, like OCC, to establish, implement, maintain, and enforce written policies and procedures that are reasonably designed to meet certain minimum requirements for their operations and risk management practices on an ongoing basis.[64] Therefore, the Commission has stated[65] that it believes it is appropriate to review changes proposed in advance notices against Rule 17Ad–22 and the objectives and principles of these risk management standards as described in Section 805(b) of the Clearing Supervision Act.[66]

OCC believes that the proposed changes are consistent with Section 805(b)(1) of the Clearing Supervision Act[67] and the requirements of Rules 17Ad–22(e)(17) and (e)(21) under the Act because the Cloud Implementation would provide OCC with resilient, secure, and scalable core clearing, risk management, and data management systems that far exceeds what is currently possible in an on-premises infrastructure.

Rule 17Ad–22(e)(17)(ii) requires OCC to establish, implement, maintain, and enforce written policies and procedures reasonably designed to manage OCC's operational risk by ''ensuring that systems have a high degree of security, resiliency, operational reliability, and adequate, scalable capacity.''[68] OCC maintains several policies specifically designed to manage the risks associated with maintaining adequate levels of system functionality, confidentiality, integrity, availability, capacity and resiliency for systems that support core clearing, risk management, and data management services.[69] As stated above, resiliency of the Cloud Infrastructure is built into the system with functionality for OCC's core clearing, risk management, and data management applications to run in multiple zones within multiple regions. Regions are isolated from one another and are designed in part to minimize the possibility of a multi-region outage. OCC has designed the infrastructure to have primary (hot)/secondary (warm) zones at all times ensuring Compute, Storage, and Network resources would be available in a new redundant region in the event of a primary region failure. As a result, the Cloud Infrastructure offers OCC multiple redundancies within which to run its core clearing, risk management, and data management applications while simultaneously restricting the effect of an incident at the CSP to the smallest footprint possible. Furthermore, in the unlikely and extraordinary event OCC loses access to each of the six levels of resiliency within the CSP environment, OCC can failover to an on-premises backup that will permit continued operations of core clearing, risk management, and data management applications.

OCC has established a robust Cloud security program to manage the security of the core clearing, risk management, and data management applications that will be running in the Cloud and to monitor the CSP's management of security of the Cloud Infrastructure that it operates. Processes are formally defined, automated to the fullest extent, repeatable with minimal variation,

[59] The FFIEC Guidance provides that OCC may obtain SOC reports, other independent audits, or ISO certification reports to gain assurance that the CSP's controls are operating effectively. *See* FFIEC, *Security in a Cloud Computing Environment,* page 7. OCC reviews the CSP's SOC–2 on an annual basis.

[60] 12 U.S.C. 5461(b).

[61] 12 U.S.C. 5464(a)(2).

[62] 12 U.S.C. 5464(b).

[63] 17 CFR 240.17Ad–22. *See* Exchange Act Release Nos. 68080 (October 22, 2012), 77 FR 66220 (November 2, 2012) (S7–08–11) (''Clearing Agency Standards''); 78961 (September 28, 2016), 81 FR 70786 (October 13, 2016) (S7–03–14) (''Standards for Covered Clearing Agencies'').

[64] 17 CFR 240.17Ad–22.

[65] *See e.g.,* Exchange Act Release No. 86182 (June 24, 2019), 84 FR 31128, 31129 (June 28, 2019) (SR–OCC–2019–803).

[66] 12 U.S.C. 5464(b). Reg SCI was not adopted under the Payment, Clearing and Settlement Supervision Act and thus is not analyzed in this section. However, an analysis of the compliance requirements of Reg SCI and the provisions of the Cloud Agreement that enable OCC to meet them are provided in confidential Exhibit 3d to File No. SR–OCC–2021–802, for which OCC has separately submitted a request for confidential treatment from the Commission.

[67] 12 U.S.C. 5464(b)(1).

[68] 17 CFR 240.17Ad–22(e)(17)(ii).

[69] OCC has separately submitted a request for confidential treatment to the Commission regarding the IT Operational Risk Management Policy, which OCC has provided as confidential Exhibit 3y to File No. SR–OCC–2021–802, the Technology Operations Policy, which OCC has provided as confidential Exhibit 3z to File No. SR–OCC–2021–802, and the Business Continuity Procedure, which OCC has provided as confidential Exhibit 3aa to File No. SR–OCC–2021–802.

accessible, adhered to, and timely.[70] The enterprise security program encompasses all OCC assets existing in OCC offices, data centers, and within the Cloud Provider's Cloud Infrastructure, and IAM controls ensure least-privileged user access to applications on the Cloud. OCC has appropriate controls in place to ensure the security of confidential information in-transit between OCC data centers and the Cloud Infrastructure, between systems within the Cloud Infrastructure, and at-rest. All network communications between OCC and the Cloud will rely on industry standard encryption for traffic while in transit, and data at rest will be safeguarded through pervasive encryption. Finally, automated delivery of business and security capability via the use of the ''Infrastructure as Code,'' Cloud agnostic tools, and continuous integration/continuous deployment pipeline methods ensure security controls are consistently and transparently deployed.

Since additional computing power can be launched on demand, the scalability in a Cloud computing environment is considerable and instantaneous. OCC could provision or de-provision Compute, Storage, and Network resources to meet demand at any given point in time. In the current on-premises environment, immediate scalability is limited by the capacity of the on-premises hardware: OCC would need to obtain additional physical servers and network equipment to scale beyond the limits of the on-premises hardware, potentially affecting the ability to quickly adapt to evolving market conditions, including spikes in trading volume.

Rule 17Ad–22(e)(21) requires OCC to establish, implement, maintain, and enforce written policies and procedures reasonably designed to ''be efficient and effective in meeting the requirements of its participants and the markets it serves,'' and to have OCC's management regularly review the ''efficiency and effectiveness of, [*inter alia,*] its (i) clearing and settlement arrangements and (ii) operating structure, including risk management policies, procedures, and systems.''[71] OCC maintains policies designed to enable the regular review of the efficiency and effectiveness of the arrangements and operating structures supporting OCC's identified goals and objectives.[72] There are several significant efficiency benefits to the Cloud Implementation, including:

- Ad-hoc reporting capability with new filtering functionality and application programming interfaces to make it easier to procure and submit data to and from the system.
- The capability to quickly add or remove Compute, Storage, or Network resources to meet changing application needs and market volatility.
- The capability to (i) run certain back testing processes that used to take days to months in a few hours; (ii) manage multiple back testing processes the same time; and (iii) eliminate any undue delay in the evaluation of potential risk management enhancements for the industry.
- The scalability to more efficiently meet historical data storage needs, provide data access through standard data services, and the ability to respond quickly to regulatory requests.
- Easy and secure access to high-quality, high-fidelity data, including a centralized, enterprise-wide repository to store and provide timely access to system of record data.

Accordingly, the proposed changes: (i) Are designed to promote robust risk management; (ii) are consistent with promoting safety and soundness; and (iii) are consistent with reducing systemic risks and promoting the stability of the broader financial system. The proposed changes also ensure that OCC systems have a high degree of security, resiliency, operational reliability, and adequate, scalable capacity, and enable OCC to be efficient and effective in meeting the requirements of its participants and the markets it serves. For the foregoing reasons, OCC believes that the proposed changes are consistent with Section 805(b)(1) of the Clearing Supervision Act[73] and Rules 17Ad–22(e)(17)[74] and (e)(21)[75] under the Exchange Act.

III. Date of Effectiveness of the Advance Notice

The proposed change may be implemented if the Commission does not object to the proposed change within 60 days of the later of (i) the date the proposed change was filed with the Commission or (ii) the date any additional information requested by the Commission is received.[76] OCC shall not implement the proposed change if the Commission has any objection to the proposed change.[77]

OCC shall post notice on its website of proposed changes that are implemented. The proposal shall not take effect until all regulatory actions required with respect to the proposal are completed.

IV. Solicitation of Comments

Interested persons are invited to submit written data, views, and arguments concerning the foregoing, including whether the advance notice is consistent with the Clearing Supervision Act. Comments may be submitted by any of the following methods:

Electronic Comments

- Use the Commission's internet comment form (*http://www.sec.gov/rules/sro.shtml*); or
- Send an email to *rule-comments@sec.gov.* Please include File Number SR–OCC–2021–802 on the subject line.

Paper Comments

- Send paper comments in triplicate to Secretary, Securities and Exchange Commission, 100 F Street NE, Washington, DC 20549.

All submissions should refer to File Number SR–OCC–2021–802. This file number should be included on the subject line if email is used. To help the Commission process and review your comments more efficiently, please use only one method. The Commission will post all comments on the Commission's internet website (*http://www.sec.gov/rules/sro.shtml*). Copies of the submission, all subsequent amendments, all written statements with respect to the advance notice that are filed with the Commission, and all written communications relating to the advance notice between the Commission and any person, other than those that may be withheld from the public in accordance with the provisions of 5 U.S.C. 552, will be available for website viewing and printing in the Commission's Public Reference Room, 100 F Street NE,

[70] For example, vulnerability scanning, automated secrets management including certificate encryption, and incident triage management and handling process.

[71] 17 CFR 240.17Ad–22(e)(21).

[72] OCC has separately submitted a request for confidential treatment to the Commission regarding the Annual Planning Policy, which OCC has provided as confidential Exhibit 3bb to File No. SR–OCC–2021–802, the Balanced Scorecard Procedure, which OCC has provided as confidential Exhibit 3cc to File No. SR–OCC–2021–802, the Enterprise Portfolio Management Procedure, which OCC has provided as confidential Exhibit 3dd to File No. SR–OCC–2021–802, the New Business and New Exchange Procedure, which OCC has provided as confidential Exhibit 3ee to File No. SR–OCC–2021–802, and the New Product Procedure, which OCC has provided as confidential Exhibit 3ff to File No. SR–OCC–2021–802.

[73] 12 U.S.C. 5464(b).

[74] 17 CFR 240.17Ad–22(e)(17).

[75] 17 CFR 240.17Ad–22(e)(21).

[76] 12 U.S.C. 5465(e)(1)(G).

[77] 12 U.S.C. 5465(e)(1)(F).

Washington, DC 20549 on official business days between the hours of 10:00 a.m. and 3:00 p.m. Copies of the filing also will be available for inspection and copying at the principal office of the self-regulatory organization.

All comments received will be posted without change. Persons submitting comments are cautioned that we do not redact or edit personal identifying information from comment submissions. You should submit only information that you wish to make available publicly.

V. Date of Timing for Commission Action

Section 806(e)(1)(G) of the Clearing Supervision Act provides that OCC may implement the changes if it has not received an objection to the proposed changes within 60 days of the later of (i) the date that the Commission receives the Advance Notice or (ii) the date that any additional information requested by the Commission is received,[78] unless extended as described below.

Pursuant to Section 806(e)(1)(H) of the Clearing Supervision Act, the Commission may extend the review period of an advance notice for an additional 60 days, if the changes proposed in the advance notice raise novel or complex issues, subject to the Commission providing the clearing agency with prompt written notice of the extension.[79]

Here, as the Commission has not requested any additional information, the date that is 60 days after OCC filed the Advance Notice with the Commission is December 7, 2021. However, the Commission finds the issues raised by the Advance Notice complex because OCC proposes to migrate its clearing, risk management, and data management applications to a cloud infrastructure with an on-demand network of configurable information technology resources running on virtual infrastructure hosted by a third party. The Commission also finds the issues raised by the Advance Notice novel because the proposed migration of a covered clearing agency's clearing, risk management, and data management applications to a third-party-hosted cloud infrastructure represents a novel circumstance in the U.S. markets that would require careful scrutiny and consideration of its associated risks. Therefore, the Commission finds it appropriate to extend the review period of the Advance Notice for an additional 60 days under Section 806(e)(1)(H) of the Clearing Supervision Act.[80]

Accordingly, the Commission, pursuant to Section 806(e)(1)(H) of the Clearing Supervision Act,[81] extends the review period for an additional 60 days so that the Commission shall have until February 5, 2022 to issue an objection or non-objection to advance notice SR–OCC–2021–802.

All submissions should refer to File Number SR–OCC–2021–802 and should be submitted on or before November 23, 2021.

For the Commission, by the Division of Trading and Markets, pursuant to delegated authority.[82]

J. Matthew DeLesDernier,

Assistant Secretary.

[FR Doc. 2021–23816 Filed 11–1–21; 8:45 am]

BILLING CODE 8011–01–P

[78] 12 U.S.C. 5465(e)(1)(G).

[79] 12 U.S.C. 5465(e)(1)(H).

[80] *Id.*

[81] *Id.*

[82] 17 CFR 200.30–3(a)(91).

SECURITIES AND EXCHANGE COMMISSION

[Release No. 34–93434; File No. SR–NYSEArca–2021–65]

Self-Regulatory Organizations; NYSE Arca, Inc.; Order Instituting Proceedings To Determine Whether To Approve or Disapprove a Proposed Rule Change To List and Trade Shares of the Sprott ESG Gold ETF Under NYSE Arca Rule 8.201–E (Commodity-Based Trust Shares)

October 27, 2021.

I. Introduction

On July 19, 2021, NYSE Arca, Inc. (''NYSE Arca'' or ''Exchange'') filed with the Securities and Exchange Commission (''Commission''), pursuant to Section 19(b)(1) of the Securities Exchange Act of 1934 (''Act'' or ''Exchange Act'')[1] and Rule 19b–4 thereunder,[2] a proposed rule change to list and trade shares (''Shares'') of the Sprott ESG Gold ETF (''Trust'') under NYSE Arca Rule 8.201–E (''Commodity-Based Trust Shares''). The proposed rule change was published for comment in the **Federal Register** on July 30, 2021.[3] On September 2, 2021, pursuant to Section 19(b)(2) of the Act,[4] the Commission designated a longer period within which to approve the proposed rule change, disapprove the proposed rule change, or institute proceedings to determine whether to approve or disapprove the proposed rule change.[5] The Commission has received no comments on the proposed rule change. The Commission is publishing this order to institute proceedings pursuant to Section 19(b)(2)(B) of the Act[6] to determine whether to approve or disapprove the proposed rule change.

II. Description of the Proposed Rule Change[7]

The Exchange proposes to list and trade Shares of the Trust[8] under NYSE Arca Rule 8.201–E, which governs the listing and trading of Commodity-Based Trust Shares[9] on the Exchange. The Sponsor of the Trust is Sprott Asset Management LP, a Canadian limited partnership (''Sponsor''). The Bank of New York Mellon serves as the Trust's administrator (''Administrator'') and transfer agent (''Transfer Agent''). The Delaware Trust Company is the trustee of the Trust (''Trustee'').[10] The Royal Canadian Mint is the custodian of the Trust's gold (''Gold Custodian'' or ''Mint'').[11] The Bank of New York

[1] 15 U.S.C. 78s(b)(1).

[2] 17 CFR 240.19b–4.

[3] *See* Securities Exchange Act Release No. 92506 (July 26, 2021), 86 FR 41109.

[4] 15 U.S.C. 78s(b)(2).

[5] *See* Securities Exchange Act Release No. 92867, 86 FR 50568 (September 9, 2021). The Commission designated October 28, 2021, as the date by which the Commission shall approve or disapprove, or institute proceedings to determine whether to approve or disapprove, the proposed rule change.

[6] 15 U.S.C. 78s(b)(2)(B).

[7] Additional information regarding the Trust and the Shares, including investment strategies, creation and redemption procedures, and portfolio holdings can be found in the Notice, *supra* note 3.

[8] On February 11, 2021, the Trust submitted to the Commission on a confidential basis its draft registration statement on Form S–1 under the Securities Act of 1933, and on July 1, 2021, the Trust submitted to the Commission the most recent amendment to its draft registration statement (collectively, the ''Registration Statement''). The Registration Statement is not yet effective, and the Exchange will not commence trading in Shares until the Registration Statement becomes effective.

[9] Commodity-Based Trust Shares are securities issued by a trust that represent investors' discrete identifiable and undivided beneficial ownership interest in the commodities deposited into the Trust. The Exchange represents that the Shares will satisfy the requirements of NYSE Arca Rule 8.201–E and thereby qualify for listing on the Exchange and that the Trust relies on the exemption contained in Rule 10A–3(c)(7) regarding the application of Rule 10A–3 (17 CFR 240.10A–3) under the Act.

[10] The Trustee is a fiduciary under the Trust Agreement and must satisfy the requirements of Section 3807 of the Delaware Statutory Trust Act. However, the fiduciary duties, responsibilities and liabilities of the Trustee are limited by, and are only those specifically set forth in, the Trust Agreement. The Trust does not have a Board of Directors or persons acting in a similar capacity.

[11] The Mint operates pursuant to the Royal Canadian Mint Act (Canada) and is a Canadian Crown corporation. Crown corporations are corporations wholly-owned by the Government of Canada. The Mint is, for all its purposes, an agent of Her Majesty in right of Canada and, as such, its obligations generally constitute unconditional obligations of the Government of Canada. The Gold Custodian is responsible for safekeeping the gold

Mellon will also serve as the Trust's cash custodian (''Cash Custodian'') pursuant to the terms of the agreement between the Trust and the Cash Custodian. In its capacity as cash custodian, the Cash Custodian will maintain a custodial account that holds cash for the benefit of the Trust for the purpose of payment of the Sponsor's fee in cash or the other expenses of the Trust.

Operation of the Trust

The investment objective of the Trust will be for the Shares to reflect the performance of the price of gold, less the Trust's expenses and liabilities. The Trust will issue Shares which represent units of fractional undivided beneficial interest in and ownership of the Trust.

The Trust's assets are expected to consist primarily of fully allocated unencumbered physical gold bullion held by the Mint on behalf of the Trust that meets certain environmental, social and governance (''ESG'') standards and criteria established by the Sponsor (''ESG Approved Gold''), and will also include unallocated unencumbered physical gold bullion held by the Mint on behalf of the Trust and cash.

The Trust does not intend to hold a certain amount of gold in unallocated form to satisfy redemption requests or to pay expenses, but the Trust expects to hold some amount of unallocated gold at any given point in time. The Trust's holdings of unallocated gold may be a significant percentage of the Trust's assets if, for example, the Trust has received more requests for creations than redemptions or the Trust's unallocated gold holdings are not sufficient to meet certain minimum size requirements to convert unallocated gold to ESG Approved Gold at the Mint. The Trust may need to instruct the Mint to convert ESG Approved Gold into unallocated gold if insufficient unallocated gold is available to be sold to pay expenses or to meet redemption requests. The Mint will exchange ESG Approved Gold for an equal amount of unallocated gold upon the receipt of proper instructions from the Sponsor.

The ESG standards and criteria used by the Sponsor (the ''ESG Criteria'') are designed to provide investors with an enhanced level of ESG scrutiny along with disclosure of the provenance of the metal sourced, and include an evaluation of mining companies and mines.[12] Mining companies and mines that meet the ESG Criteria (''ESG Approved Mining Companies'' and ''ESG Approved Mines'', respectively) must also comply with the Mint Responsible Sourcing Requirements. An overview of the Sponsor's application of the ESG Criteria to mining companies and mines that can provide the material for ESG Approved Gold is provided below.[13]

The application of the ESG Criteria involves multiple levels of analysis. While the Sponsor's evaluation of mines and mining companies will include the objective factors discussed below, the Sponsor will also evaluate company reports and, where possible, interview key personnel to assess whether such a mining company or mine meets the ESG Criteria, which will require the subjective judgment of the Sponsor. The selection of these factors and how they are applied will be based, at least to some degree, on the judgment of the Sponsor and may or may not be consistent with current or future standards used by others in the industry. The ESG Criteria is subject to change by the Sponsor in its sole discretion.

The ESG Criteria are in addition to those used in the London Bullion Market Association's (''LBMA'') Responsible Sourcing Program, as detailed in the LBMA's Responsible Gold Guidance, and are designed to provide investors with an enhanced level of ESG scrutiny along with disclosure of the provenance of the metal sourced. The Mint currently requires that its refining customers, including mines, meet the requirements outlined in the OECD Due Diligence Guidance for Responsible Supply Chains of Minerals from Conflict-Affected and High-Risk Areas, the LBMA Responsible Gold Guidance, the Mint's Responsible Metals Program and the Mint's Anti-Money Laundering and Anti-Terrorist Financing Program in compliance with the Proceeds of Crime (Money Laundering) and Terrorist Financing Act (Canada) (collectively, the ''Mint Responsible Sourcing Requirements''). Only mines which the Mint determines meet and maintain the Mint Responsible Sourcing Requirements and with whom the Mint has a contractual refining relationship (each a ''Mint Approved Mine'', collectively the ''Mint Approved Mines'') will be eligible for consideration by the Sponsor as a provider of ESG Approved Gold. The Mint will cease refining gold from any Mint Approved Mine that no longer meets the Mint Responsible Sourcing Requirements, as determined by the Mint from time to time.

The ESG factors used for the ESG assessment of mines and miners generally will encompass the following factors:

- Environmental Factors
  - Energy use and greenhouse gas emissions
  - Tailings and waste management
  - Conservation and water management
  - Mine site remediation
- Social Factors
  - Worker safety and health
  - Community relations
  - Natural resource benefit to local communities
  - Child and forced labor
- Governance Factors
  - Corporate governance
  - Workplace and gender diversity
  - Fair executive compensation
  - Corporate transparency and disclosures

Mining companies that qualify for the LBMA's Responsible Sourcing Program and are Mint Approved Mines will then be subject to two levels of ESG screening by the Sponsor: At the overall company level and at the individual mine site level.

First, the Sponsor will evaluate a mining company using ESG factors determined by the Sponsor (described above). This evaluation will use a number of tools, which include ratings from third-party research providers, such as Sustainalytics ESG Risk Ratings, along with sell-side equity research reports. With respect to corporate governance, the Sponsor will evaluate recommendations from proxy voting

owned by the Trust pursuant to gold storage and custody agreements. The Gold Custodian will hold gold for the account of the Trust on an allocated basis (the ''Trust Allocated Account''), except where gold is temporarily held in an unallocated account (the ''Trust Unallocated Account''). The Sponsor may cause the Trust to engage unaffiliated gold brokers to transfer unallocated gold between the Trust's custody accounts maintained for the benefit of the Trust by the Gold Custodian in Ottawa, Canada and London, United Kingdom where it can be delivered to a redeeming Authorized Participant (as defined below) if additional unallocated gold is needed by the Trust to satisfy the redeeming Authorized Participant's redemption request. The Gold Custodian is responsible for allocating specific bars of gold to the Trust Allocated Account. The Gold Custodian will provide the Trust with regular reports detailing the gold transfers in and out of the Trust Unallocated Account with the Gold Custodian and identifying the gold bars held in the Trust Allocated Account.

[12] The ESG Criteria are anticipated to evolve over time at the discretion of the Sponsor. Also, one or more criterion may not be relevant with respect to all sources of gold that are eligible for investment. Factors that could be considered by the Sponsor in modifying the ESG Criteria include changes to current gold mining techniques or standards, evolving legal standards, the introduction of new standards or evaluation frameworks within the mining industry or the elimination of existing standards or frameworks that in the view of the Sponsor are relevant to the ESG assessment of a mining company or mine site.

[13] The ESG Criteria and the Sponsor's application of the ESG Criteria are disclosed in the Registration Statement.

research providers, such as the Glass Lewis Proxy Review. The Sponsor will also use compliance with precious metals industry standards as an objective factor in its evaluation of mining companies. Each mining company with high ESG ratings and favorable recommendations from proxy voting research providers that complies with precious metals industry standards will be designated as an ESG Approved Mining Company.

Second, the Sponsor will evaluate individual mine site locations of each ESG Approved Mining Company. Each mine location of an ESG Approved Mining Company will then be evaluated by the Sponsor as follows: (1) The performance of each mine against various indicators in the Mining Association of Canada's Towards Sustainable Mining standards; (2) using the ESG factors described above; and (3) whether such mine is in a heightened risk or conflict area. Each mining location of that ESG Approved Mining Company that (a) the Sponsor determines to meet the Mining Association of Canada's Towards Sustainable Mining standards and the ESG factors, and (b) is not in a heightened risk or conflict area will be designated as an ESG Approved Mine. Only ESG Approved Mines will be permitted to supply the raw material for ESG Approved Gold to the Mint, which will then refine the raw material to create ESG Approved Gold for the Trust. This means that the provenance of ESG Approved Gold will be known to the Trust.

Heightened risk or conflict areas include areas where:

- Human rights abuses, forced or child labor, war crimes or genocide are prevalent;
- mines are involved in direct or indirect support to non-state actors that use arms without legal authority;
- mines transport gold or supplies along routes that involve payment of illegal taxes or extortions; and
- mines are involved in money laundering or terrorism financing.

The Sponsor will be responsible for any costs associated with researching, establishing and maintaining the ESG Criteria, assessing mining companies and mines against certain of the ESG Criteria and the diligence of the Trust's ESG Approved Gold Holdings. The Sponsor will conduct research on each mining company using its in-house investment professionals, and may use the services of outside consultants.

The Trust will not trade in gold futures, options or swap contracts on any futures exchange or over the counter (''OTC''). The Trust will not hold or trade in commodity futures contracts, ''commodity interests,'' or any other instruments regulated by the Commodity Exchange Act. The Trust's Cash Custodian may hold cash temporarily received from the sale of gold. The Trust's assets will only consist of ESG Approved Gold, unallocated gold and cash.

Operation of the Gold Market

The global trade in gold consists of OTC transactions in spot, forwards, and options and other derivatives, together with exchange-traded futures and options. The ESG Criteria and the processes and methods for refining and using ESG Approved Gold for the Trust's operations have been developed by the Sponsor specifically for the Trust, and thus no ESG Approved Gold that meets the ESG Criteria has been produced. Therefore, there have been no market transactions in ESG Approved Gold. The Trust is not aware of a separate market for ESG Approved Gold and does not believe that one will develop. ESG Approved Gold will be a subset of allocated gold bullion that is already currently refined by the Mint for its customers.

The OTC gold market includes spot, forward, and option and other derivative transactions conducted on a principal-to-principal basis. While this is a global, nearly 24-hour per day market, its main centers are London, New York, and Zurich.

According to the Exchange, most OTC market trades are cleared through London. The LBMA plays an important role in setting OTC gold trading industry standards. A London Good Delivery Bar (as described below), which is acceptable for settlement of any OTC transaction, will be acceptable for delivery to the Trust in connection with the issuance of Creation Units (defined below).

The most significant gold futures exchange in the U.S. is COMEX, operated by Commodities Exchange, Inc., a subsidiary of New York Mercantile Exchange, Inc., and a subsidiary of the Chicago Mercantile Exchange Group (the ''CME Group''). Other commodity exchanges include the Tokyo Commodity Exchange (''TOCOM''), the Multi Commodity Exchange Of India (''MCX''), the Shanghai Futures Exchange, ICE Futures US (the ''ICE''), and the Dubai Gold & Commodities Exchange. The CME Group and ICE are members of the Intermarket Surveillance Group (''ISG'').

The London Gold Bullion Market

According to the Exchange, most trading in physical gold is conducted on the OTC market, predominantly in London. LBMA coordinates various OTC-market activities, including clearing and vaulting, acts as the principal intermediary between physical gold market participants and the relevant regulators, promotes good trading practices and develops standard market documentation. In addition, the LBMA promotes refining standards for the gold market by maintaining the ''London Good Delivery List,'' which identifies refiners of gold that have been approved by the LBMA. In the OTC market, gold bars that meet the specifications for weight, dimensions, fineness (or purity), identifying marks (including the assay stamp of an LBMA-acceptable refiner) and appearance described in ''The Good Delivery Rules for Gold and Silver Bars'' published by the LBMA are referred to as ''London Good Delivery Bars.'' A London Good Delivery Bar (typically called a ''400 ounce bar'') must contain between 350 and 430 fine troy ounces of gold (1 troy ounce = 31.1034768 grams), with a minimum fineness (or purity) of 995 parts per 1,000 (99.5%), be of good appearance and be easy to handle and stack. The fine gold content of a gold bar is calculated by multiplying the gross weight of the bar (expressed in units of 0.025 troy ounces) by the fineness of the bar. A London Good Delivery Bar must also bear the stamp of one of the refiners identified on the London Good Delivery List.

Following the enactment of the Financial Markets Act 2012, the Prudential Regulation Authority of the Bank of England is responsible for regulating most of the financial firms that are active in the bullion market, and the Financial Conduct Authority is responsible for consumer and competition issues. Trading in spot, forwards and wholesale deposits in the bullion market is subject to the Non-Investment Products (''NIPS'') Code adopted by market participants.

Creation and Redemption of Shares

The Trust will create and redeem Shares on a continuous basis in one or more blocks of 25,000 Shares (a block of 25,000 Shares is called a ''Creation Unit''). As described below, the Trust will issue Shares in Creation Units to certain authorized participants (''Authorized Participants'') on an ongoing basis.

Creation Units may be created or redeemed only by Authorized Participants. Orders must be placed by 3:59 p.m. Eastern Time (''E.T.''). The day on which a Trust receives a valid purchase or redemption order is the order date. In connection with creations

and redemptions of Creation Units, Authorized Participants will be required to deliver or receive unallocated gold to or from the Trust, as applicable. An Authorized Participant will be required to enter into a trading agreement with the Mint for purposes of facilitating transfers of unallocated gold between the Trust and the Authorized Participant.

Unallocated gold received from Authorized Participants will be converted into ESG Approved Gold by the Mint. The Mint will convert unallocated gold into ESG Approved Gold after receipt of a completed withdrawal request form from the Sponsor to withdraw an amount of unallocated gold from the Trust Unallocated Account and deposit ESG Approved Gold into the Trust Allocated Account.

The Trust will redeem Shares using unallocated gold. To the extent that the Trust's existing holdings of unallocated gold are insufficient to meet a redemption request, the Trust will be required to request that the Mint convert ESG Approved Gold to unallocated gold, which may result in delays in the Trust's ability to meet redemption requests from Authorized Participants. The Mint will exchange ESG Approved Gold for an equal amount of unallocated gold upon the receipt of proper instructions from the Sponsor. The Mint will issue a confirmation of a completed exchange to the Sponsor by facsimile or by email on the business day that the exchange is completed.

The Mint expects that it will be able to refine and produce ESG Approved Gold within approximately five business days following the receipt of completed withdrawal request, subject to production capacity, availability and minimum size requirements. The business day on which the physical withdrawal is to occur will be confirmed to the Sponsor in writing by the Mint. A receipt of deposit will be issued to the Sponsor by facsimile or by email on the business day the production of all ESG Approved Gold underlying a withdrawal request form is completed.

Creation Units are only issued or redeemed on a day that the Exchange is open for regular trading in an amount of gold determined by the Administrator. Because ESG Approved Gold can be sourced by the Mint only from a limited number of suppliers, from time-to-time, on a temporary basis until additional ESG Approved Gold can be refined by the Mint, the Trust will hold gold in unallocated form. No Shares will be issued unless the Mint has allocated to the Trust Unallocated Account the corresponding amount of unallocated gold from the Authorized Participant's account.

Each Authorized Participant must be a registered broker-dealer, a participant in Depository Trust Corporation (''DTC''), have entered into an agreement with the Trustee (the ''Authorized Participant Agreement'') and be in a position to deliver or receive to or from the Trust, as applicable, an amount of gold that is at least equal to the aggregate NAV of the number of Creation Units that are part of a purchase order or redemption order, as the case may be.

According to the Registration Statement, Authorized Participants may surrender Creation Units in exchange for the corresponding amount of unallocated gold announced by the Transfer Agent. Upon the surrender of such Shares and the payment of the Transfer Agent's applicable fee and of any expenses, taxes or charges, the Transfer Agent will deliver to the order of the redeeming Authorized Participant the amount of unallocated gold corresponding to the redeemed Creation Units. Shares can only be surrendered for redemption in Creation Units of 25,000 Shares each.

Before surrendering Creation Units for redemption, an Authorized Participant must deliver to the Trustee a written request indicating the number of Creation Units it intends to redeem. The date the Trustee receives that order determines the amount of unallocated gold to be received in exchange. However, orders received by the Trustee after 3:59 p.m. Eastern Time (''E.T.'') will be rejected.

The redemption distribution from the Trust will consist of a credit to the redeeming Authorized Participant's unallocated account representing the amount of the gold held by the Trust evidenced by the Shares being redeemed as of the date of the redemption order.

Net Asset Value

The NAV of the Trust will be calculated by subtracting the Trust's expenses and liabilities on any day from the value of the gold and other assets owned by the Trust on that day; the NAV per Share will be obtained by dividing the NAV of the Trust on a given day by the number of Shares outstanding on that day. On each day on which the Exchange is open for regular trading, the Administrator will determine the NAV as promptly as practicable after 4:00 p.m. E.T. The Administrator will value the Trust's gold on the basis of LBMA Gold Price PM or LBMA Gold Price AM. If the Sponsor deems it necessary, the Sponsor and the Administrator may agree to use a widely recognized pricing service for purposes of ascertaining the price of gold to use when calculating the NAV. The NAV per Share will be calculated by taking the current price of the Trust's total assets, subtracting any liabilities, and dividing by the total number of Shares outstanding.

Authorized Participants will not receive from the Sponsor, the Trust or any affiliates any fee or other compensation in connection with the offering of the Shares.

Availability of Information Regarding Gold

Currently, the Consolidated Tape Plan does not provide for dissemination of the spot price of a commodity such as gold over the Consolidated Tape. However, there will be disseminated over the Consolidated Tape the last sale price for the Shares, as is the case for all equity securities traded on the Exchange (including exchange-traded funds). In addition, there is a considerable amount of information about gold and gold markets available on public websites and through professional and subscription services.

Investors may obtain gold pricing information on a 24-hour basis based on the spot price for an ounce of Gold from various financial information service providers, such as Reuters and Bloomberg.

Reuters and Bloomberg, for example, provide at no charge on their websites delayed information regarding the spot price of Gold and last sale prices of Gold futures, as well as information about news and developments in the gold market. Reuters and Bloomberg also offer a professional service to subscribers for a fee that provides information on Gold prices directly from market participants. Complete real-time data for Gold futures and options prices traded on the COMEX are available by subscription from Reuters and Bloomberg. There are a variety of other public websites providing information on gold, ranging from those specializing in precious metals to sites maintained by major newspapers. In addition, the LBMA Gold Price is publicly available at no charge at *www.lbma.org.uk.*

Availability of Information

The intraday indicative value (''IIV'') per Share for the Shares will be disseminated by one or more major market data vendors. The IIV will be calculated based on the amount of gold held by the Trust and a price of gold

derived from updated bids and offers indicative of the spot price of gold.[14]

The website for the Trust (*https://sprott.com/investment-strategies/physical-bullion-trusts*) will contain the following information, on a per Share basis, for the Trust: (a) The mid-point of the bid-ask price [15] at the close of trading (''Bid/Ask Price''), and a calculation of the premium or discount of such price against such NAV; and (b) data in chart format displaying the frequency distribution of discounts and premiums of the Bid/Ask Price against the NAV, within appropriate ranges, for each of the four previous calendar quarters. The website for the Trust will also provide the Trust's prospectus. Finally, the Trust's website will be updated once daily to provide the last sale price of the Shares as traded in the U.S. market at the end of regular trading. In addition, information regarding market price and trading volume of the Shares will be continually available on a real-time basis throughout the day on brokers' computer screens and other electronic services. Information regarding the previous day's closing price and trading volume information for the Shares will be published daily in the financial section of newspapers.

The Trust will maintain on its website current lists of the ESG Criteria and ESG Approved Mines and ESG Approved Mining Companies from which the Trust sources its ESG Approved Gold. The Trust anticipates that ESG Approved Mines and ESG Approved Mining Companies may be added or removed from such lists over time based on, among other things, whether such ESG Approved Mines and ESG Approved Mining Companies meet the evolving ESG Criteria and whether they are Mint Approved Mines. The Trust will update the information on its website promptly after any change to the ESG Criteria, ESG Approved Mines or ESG Approved Mining Companies.

Criteria for Initial and Continued Listing

The Trust will be subject to the criteria in NYSE Arca Rule 8.201–E(e) for initial and continued listing of the Shares.

A minimum of two Creation Units or 50,000 Shares will be required to be outstanding at the start of trading, which is equivalent to 10,000 fine ounces of gold or about $18,550,000 as of June 14, 2021. The Exchange believes that the anticipated minimum number of Shares outstanding at the start of trading is sufficient to provide adequate market liquidity.

Trading Rules

The Exchange deems the Shares to be equity securities, thus rendering trading in the Trust subject to the Exchange's existing rules governing the trading of equity securities. Trading in the Shares on the Exchange will occur in accordance with NYSE Arca Rule 7.34–E(a). The Exchange has appropriate rules to facilitate transactions in the Shares during all trading sessions. As provided in NYSE Arca Rule 7.6–E, Commentary .03, the minimum price variation (''MPV'') for quoting and entry of orders in equity securities traded on the NYSE Arca Marketplace is $0.01, with the exception of securities that are priced less than $1.00 for which the MPV for order entry is $0.0001.

Further, NYSE Arca Rule 8.201–E sets forth certain restrictions on ETP Holders acting as registered Market Makers in the Shares to facilitate surveillance. Under NYSE Arca Rule 8.201–E(g), an ETP Holder acting as a registered Market Maker in the Shares is required to provide the Exchange with information relating to its trading in the underlying gold, any related futures or options on futures, or any other related derivatives. Commentary .04 of NYSE Arca Rule 6.3–E requires an ETP Holder acting as a registered Market Maker, and its affiliates, in the Shares to establish, maintain and enforce written policies and procedures reasonably designed to prevent the misuse of any material nonpublic information with respect to such products, any components of the related products, any physical asset or commodity underlying the product, applicable currencies, underlying indexes, related futures or options on futures, and any related derivative instruments (including the Shares).

As a general matter, the Exchange has regulatory jurisdiction over its ETP Holders and their associated persons, which include any person or entity controlling an ETP Holder. To the extent the Exchange may be found to lack jurisdiction over a subsidiary or affiliate of an ETP Holder that does business only in commodities or futures contracts, the Exchange could obtain information regarding the activities of such subsidiary or affiliate through surveillance sharing agreements with regulatory organizations of which such subsidiary or affiliate is a member.

With respect to trading halts, the Exchange may consider all relevant factors in exercising its discretion to halt or suspend trading in the Shares. Trading on the Exchange in the Shares may be halted because of market conditions or for reasons that, in the view of the Exchange, make trading in the Shares inadvisable. These may include: (1) The extent to which conditions in the underlying gold market have caused disruptions and/or lack of trading, or (2) whether other unusual conditions or circumstances detrimental to the maintenance of a fair and orderly market are present. In addition, trading in Shares will be subject to trading halts caused by extraordinary market volatility pursuant to the Exchange's ''circuit breaker'' rule.[16] The Exchange will halt trading in the Shares if the NAV of the Trust is not calculated or disseminated daily. The Exchange may halt trading during the day in which an interruption occurs to the dissemination of the IIV, as described above. If the interruption to the dissemination of the IIV persists past the trading day in which it occurs, the Exchange will halt trading no later than the beginning of the trading day following the interruption.

Surveillance

The Exchange represents that trading in the Shares will be subject to the existing trading surveillances administered by the Exchange, as well as cross-market surveillances administered by the Financial Industry Regulatory Authority (''FINRA'') on behalf of the Exchange, which are designed to detect violations of Exchange rules and applicable federal securities laws.[17] The Exchange represents that these procedures are adequate to properly monitor Exchange trading of the Shares in all trading sessions and to deter and detect violations of Exchange rules and federal securities laws applicable to trading on the Exchange.

The surveillances referred to above generally focus on detecting securities trading outside their normal patterns, which could be indicative of manipulative or other violative activity. When such situations are detected, surveillance analysis follows and investigations are opened, where appropriate, to review the behavior of all relevant parties for all relevant trading violations.

The Exchange or FINRA, on behalf of the Exchange, or both, will

[14] The IIV on a per Share basis disseminated during the Core Trading Session should not be viewed as a real-time update of the NAV, which is calculated once a day.

[15] The bid-ask price of the Shares will be determined using the highest bid and lowest offer on the Consolidated Tape as of the time of calculation of the closing day NAV.

[16] *See* NYSE Arca Rule 7.12–E.

[17] FINRA conducts cross-market surveillances on behalf of the Exchange pursuant to a regulatory services agreement. The Exchange is responsible for FINRA's performance under this regulatory services agreement.

communicate as needed regarding trading in the Shares with other markets and other entities that are members of the ISG, and the Exchange or FINRA, on behalf of the Exchange, or both, may obtain trading information regarding trading in the Shares from such markets and other entities. In addition, the Exchange may obtain information regarding trading in the Shares from markets and other entities that are members of ISG or with which the Exchange has in place a comprehensive surveillance sharing agreement.[18]

Also, pursuant to NYSE Arca Rule 8.201–E(g), the Exchange is able to obtain information regarding trading in the Shares and the underlying gold through ETP Holders acting as registered Market Makers, in connection with such ETP Holders' proprietary or customer trades through ETP Holders which they effect on any relevant market.

In addition, the Exchange also has a general policy prohibiting the improper distribution of material, non-public information by its employees.

All statements and representations made in this filing regarding (a) the description of the portfolio, (b) limitations on portfolio holdings or reference assets, or (c) the applicability of Exchange listing rules specified in this rule filing shall constitute continued listing requirements for listing the Shares of the Trust on the Exchange.

The issuer has represented to the Exchange that it will advise the Exchange of any failure by the Trust to comply with the continued listing requirements, and, pursuant to its obligations under Section 19(g)(1) of the Act, the Exchange will monitor for compliance with the continued listing requirements. If the Trust is not in compliance with the applicable listing requirements, the Exchange will commence delisting procedures under NYSE Arca Rule 5.5–E(m).

III. Proceedings To Determine Whether To Approve or Disapprove SR–NYSEArca–2021–65 and Grounds for Disapproval Under Consideration

The Commission is instituting proceedings pursuant to Section 19(b)(2)(B) of the Act[19] to determine whether the proposed rule change should be approved or disapproved. Institution of such proceedings is appropriate at this time in view of the legal and policy issues raised by the proposal. Institution of proceedings does not indicate that the Commission has reached any conclusions with respect to any of the issues involved. Rather, as described below, the Commission seeks and encourages interested persons to provide comments on the proposed rule change.

Pursuant to Section 19(b)(2)(B) of the Act,[20] the Commission is providing notice of the grounds for disapproval under consideration. The Commission is instituting proceedings to allow for additional analysis of the proposal's consistency with Section 6(b)(5) of the Act, which requires, among other things, that the rules of a national securities exchange be ''designed to prevent fraudulent and manipulative acts and practices, to promote just and equitable principles of trade,'' and ''to protect investors and the public interest.'' [21]

Under the Commission's Rules of Practice, the ''burden to demonstrate that a proposed rule change is consistent with the Exchange Act and the rules and regulations issued thereunder . . . is on the [SRO] that proposed the rule change.'' [22] The description of a proposed rule change, its purpose and operation, its effect, and a legal analysis of its consistency with applicable requirements must all be sufficiently detailed and specific to support an affirmative Commission finding,[23] and any failure of an SRO to provide this information may result in the Commission not having a sufficient basis to make an affirmative finding that a proposed rule change is consistent with the Act and the applicable rules and regulations.[24]

The Commission is concerned that certain aspects of the proposal are not sufficiently described and that the Exchange has not met its burden to demonstrate that the proposed rule change is consistent with the Act and the rules and regulations issued thereunder. For example, with respect to creation and redemption of Shares, the Exchange describes a process whereby the Mint will convert unallocated gold into ESG Approved Gold or convert ESG Approved Gold into unallocated gold.[25] However, the Exchange does not explain how this conversion process will take place or provide sufficient details on how costly it will be for the Mint to perform such a conversion on the Fund's behalf and the extent to which these costs will be borne by investors in the Shares. The Exchange also does not explain why this conversion from unallocated gold to ESG Approved Gold is necessary rather than allowing Authorized Participants to submit Creation Units of ESG Approved Gold that they have sourced from the Mint. In addition, the Exchange states that to the extent that the Trust's existing holdings of unallocated gold are insufficient to meet a redemption request, the Trust will be required to request that the Mint convert ESG Approved Gold to unallocated gold, which may result in delays in the Trust's ability to meet redemption requests from Authorized Participants. However, the Exchange does not sufficiently explain why such a conversion is necessary to effect redemptions instead of the Fund redeeming Shares using ESG Approved Gold without a delay, or why this delay does not raise concerns under the Act.[26] As such, the Commission has concerns about the proposed conversion process and whether the proposal is sufficiently designed to prevent fraudulent and manipulative acts and practices, to promote just and equitable principles of trade, and to protect investors and the public interest, as required by Section 6(b)(5) of the Act.

Furthermore, the Commission is concerned that the Exchange does not adequately explain how other aspects of the proposal are designed to prevent fraudulent and manipulative acts and practices, to promote just and equitable principles of trade, and to protect investors and the public interest, as required by Section 6(b)(5) of the Act. For example, the Exchange represents that the Administrator will value the Trust's gold, including both ESG Approved Gold and unallocated gold held by the Trust, based on LBMA Gold Price PM or LBMA Gold Price AM.[27] The Exchange further states that the Trust is not aware of a separate market for ESG Approved Gold and does not believe that one will develop.[28] However, given that ESG Approved Gold may constitute, by construction, a small portion of the total gold outstanding in the market, the Exchange has not sufficiently explained why the Trust can expect to trade or value ESG Approved Gold at the same price as unallocated gold. In addition, the proposal does not address the potential effects that the listing and trading of the Shares may have on the development of a separate market for ESG Approved Gold or differential pricing terms for

[18] For a list of the current members of ISG, *see www.isgportal.org.*

[19] 15 U.S.C. 78s(b)(2)(B).

[20] *Id.*

[21] 15 U.S.C. 78f(b)(5).

[22] 17 CFR 201.700(b)(3).

[23] *See id.*

[24] *See id.*

[25] *See* Notice, *supra* note 3.

[26] *See* Notice, *supra* note 3.

[27] *See id.*

[28] *See id.*

ESG Approved Gold in existing gold markets. The proposal also does not address the effect such a differential may have on the valuation of the Shares, potential pricing dislocations between the NAV per Share and Share price or between the NAV and the true value of the underlying assets, or how such dislocations might affect investors in the Shares, nor how those effects would be consistent with the Act.

For these reasons, the Commission believes it is appropriate to institute proceedings pursuant to Section 19(b)(2)(B) of the Act [29] to determine whether the proposal should be approved or disapproved.

IV. Procedure: Request for Written Comments

The Commission requests that interested persons provide written submissions of their views, data, and arguments with respect to the issues identified above, as well as any other concerns they may have with the proposal. In particular, the Commission invites the written views of interested persons concerning whether the proposed rule change is consistent with Section 6(b)(5) or any other provision of the Act, or the rules and regulations thereunder. Although there do not appear to be any issues relevant to approval or disapproval that would be facilitated by an oral presentation of views, data, and arguments, the Commission will consider, pursuant to Rule 19b–4, any request for an opportunity to make an oral presentation.[30]

Interested persons are invited to submit written data, views, and arguments regarding whether the proposed rule change should be approved or disapproved by November 23, 2021. Any person who wishes to file a rebuttal to any other person's submission must file that rebuttal by December 7, 2021.

The Commission asks that commenters address the sufficiency of the Exchange's statements in support of the proposal in addition to any other comments they may wish to submit about the proposed rule change. In this regard, the Commission seeks commenters' views regarding the Exchange's proposal to list and trade the Shares is adequately designed to prevent fraudulent and manipulative acts and practices, to promote just and equitable principles of trade, and to protect investors and the public interest, consistent with the Act.

Comments may be submitted by any of the following methods:

Electronic Comments

- Use the Commission's internet comment form (*http://www.sec.gov/rules/sro.shtml*); or
- Send an email to *rule-comments@sec.gov.* Please include File Number SR–NYSEArca–2021–65 on the subject line.

Paper Comments

- Send paper comments in triplicate to Secretary, Securities and Exchange Commission, 100 F Street NE, Washington, DC 20549–1090.

All submissions should refer to File Number SR–NYSEArca–2021–65. This file number should be included on the subject line if email is used. To help the Commission process and review your comments more efficiently, please use only one method. The Commission will post all comments on the Commission's internet website (*http://www.sec.gov/rules/sro.shtml*). Copies of the submission, all subsequent amendments, all written statements with respect to the proposed rule change that are filed with the Commission, and all written communications relating to the proposed rule change between the Commission and any person, other than those that may be withheld from the public in accordance with the provisions of 5 U.S.C. 552, will be available for website viewing and printing in the Commission's Public Reference Room, 100 F Street NE, Washington, DC 20549 on official business days between the hours of 10:00 a.m. and 3:00 p.m. Copies of the filing also will be available for inspection and copying at the principal office of the Exchange. All comments received will be posted without change. Persons submitting comments are cautioned that we do not redact or edit personal identifying information from comment submissions. You should submit only information that you wish to make available publicly. All submissions should refer to File Number SR–NYSEArca–2021–65 and should be submitted by November 23, 2021. Rebuttal comments should be submitted by December 7, 2021.

For the Commission, by the Division of Trading and Markets, pursuant to delegated authority.[31]

J. Matthew DeLesDernier,

Assistant Secretary.

[FR Doc. 2021–23810 Filed 11–1–21; 8:45 am]

BILLING CODE 8011–01–P

[29] 15 U.S.C. 78s(b)(2)(B).

[30] Section 19(b)(2) of the Act, as amended by the Securities Act Amendments of 1975, Public Law 94–29 (June 4, 1975), grants the Commission flexibility to determine what type of proceeding—either oral or notice and opportunity for written comments—is appropriate for consideration of a particular proposal by a self-regulatory organization. *See* Securities Act Amendments of 1975, Senate Comm. on Banking, Housing & Urban Affairs, S. Rep. No. 75, 94th Cong., 1st Sess. 30 (1975).

[31] 17 CFR 200.30–3(a)(57).

SECURITIES AND EXCHANGE COMMISSION

[Release No. 34–93435; File No. SR–MSRB–2021–06]

Self-Regulatory Organizations; Municipal Securities Rulemaking Board; Notice of Filing and Immediate Effectiveness of a Proposed Rule Change To Further Extend the Regulatory Relief and Permit Dealers To Conduct Office Inspections Remotely Until June 30, 2022, Pursuant to MSRB Rule G–27, on Supervision

October 27, 2021.

Pursuant to Section 19(b)(1) of the Securities Exchange Act of 1934 (''Act'' or ''Exchange Act'') [1] and Rule 19b–4 thereunder,[2] notice is hereby given that on October 26, 2021 the Municipal Securities Rulemaking Board (''MSRB'') filed with the Securities and Exchange Commission (''SEC'' or ''Commission'') the proposed rule change as described in Items I, II, and III below, which Items have been prepared by the MSRB. The Commission is publishing this notice to solicit comments on the proposed rule change from interested persons.

I. Self-Regulatory Organization's Statement of the Terms of Substance of the Proposed Rule Change

The MSRB filed with the Commission a proposed rule change to amend Supplementary Material .01, Temporary Relief for Completing Office Inspections, of MSRB Rule G–27, on supervision, to further extend the regulatory relief and permit brokers, dealers and municipal securities dealers (collectively, ''dealers'') to conduct office inspections, due to be completed during calendar year 2022, remotely until June 30, 2022 (the ''proposed rule change'').

The MSRB has designated the proposed rule change as constituting a ''noncontroversial'' rule change under Section 19(b)(3)(A) [3] of the Act and Rule 19b–4(f)(6) [4] thereunder, which renders the proposal effective upon receipt of this filing by the Commission. The

[1] 15 U.S.C. 78s(b)(1).

[2] 17 CFR 240.19b–4.

[3] 15 U.S.C. 78s(b)(3)(A).

[4] 17 CFR 240.19b–4(f)(6).

MSRB proposes an operative date of January 1, 2022.

The text of the proposed rule change is available on the MSRB's website at *www.msrb.org/Rules-and-Interpretations/SEC-Filings/2021-Filings.aspx,* at the MSRB's principal office, and at the Commission's Public Reference Room.

II. Self-Regulatory Organization's Statement of the Purpose of, and Statutory Basis for, the Proposed Rule Change

In its filing with the Commission, the MSRB included statements concerning the purpose of and basis for the proposed rule change and discussed any comments it received on the proposed rule change. The text of these statements may be examined at the places specified in Item IV below. The MSRB has prepared summaries, set forth in Sections A, B, and C below, of the most significant aspects of such statements.

A. Self-Regulatory Organization's Statement of the Purpose of, and Statutory Basis for, the Proposed Rule Change

1. Purpose

The MSRB continues to closely monitor the impact on municipal market participants resulting from the coronavirus disease (''COVID–19'') pandemic. In light of the operational challenges and disruptions to normal business functions as a result of the pandemic, the MSRB previously filed a proposed rule change for immediate effectiveness with the SEC in April 2020 [5] and a second proposed rule change in December 2020 [6] (''April relief'' and ''December relief''). In connection with the April relief, the MSRB provided additional time for dealers to complete certain supervisory obligations, including, among other things, that office inspections due to be conducted during calendar year 2020 could be conducted by March 31, 2021, but with the expectation that dealers would conduct their inspections on-site. The December relief allowed dealers to conduct their office inspections remotely that were due to be completed by March 31, 2021, for calendar year 2020 and those for calendar year 2021, subject to certain conditions being met.

Through stakeholder engagement, the MSRB has learned that dealers have delayed their return to office plans due to the continued pandemic and are considering or have implemented hybrid work arrangements dependent on functions and regulatory requirements. To that end, in order to address ongoing industry-wide concerns regarding having to conduct in-person office inspections while safety concerns related to the pandemic persist [7] and to align with pandemic-related regulatory relief provided by FINRA,[8] the MSRB is proposing amendments to Supplementary Material .01 of MSRB Rule G–27. The proposed amendments to Supplementary Material .01 of MSRB Rule G–27 would allow dealers to satisfy their office inspection obligations by permitting dealers to conduct calendar year 2022 office inspections remotely until June 30, 2022, without the need to conduct an on-site visit to such office or location.[9]

The conditions required to be met for dealers to avail themselves of the option to conduct office inspections remotely remain unchanged; however, technical amendments are being proposed to paragraphs (b) and (d) to reflect the additional extension of time under the proposed rule change. Pursuant to paragraphs (b) and (d) of Supplementary Material .01 of MSRB Rule G–27, for dealers that elect to conduct their office inspections remotely, such dealers must (i) amend or supplement their written supervisory procedures as appropriate to provide for remote inspections that are reasonably designed to assist in detecting and preventing violations of, and achieving compliance with, applicable securities laws and regulations, and with applicable Board rules; (ii) use remote office inspections as part of an effective supervisory system, which would include the ongoing review of activities and functions occurring at all offices and locations; and (iii) make and maintain the required records related to remote office inspections.

The regulatory relief provided for under the proposed rule change will automatically sunset on June 30, 2022. During this time, the MSRB will continue to monitor the effectiveness of remote office inspections on dealers' overall supervisory systems and will consider more long-term regulatory initiatives that align with and promote the evolving ways dealers are doing business and supervising the activities of the dealer and its associated persons.

2. Statutory Basis

The MSRB believes that the proposed rule change is consistent with Section 15B(b)(2)(C) of the Exchange Act,[10] which provides that the MSRB's rules shall:

> be designed to prevent fraudulent and manipulative acts and practices, to promote just and equitable principles of trade, to foster cooperation and coordination with persons engaged in regulating, clearing, settling, processing information with respect to, and facilitating transactions in municipal securities and municipal financial products, to remove impediments to and perfect the mechanism of a free and open market in municipal securities and municipal financial products, and, in general, to protect investors, municipal entities, obligated persons, and the public interest.

The proposed rule change is designed to provide dealers additional time to comply with certain obligations under MSRB rules for a temporary period of time; it does not relieve dealers from compliance with their core regulatory obligations to establish and maintain a system to supervise the activities of each of its associated persons that is reasonably designed to achieve compliance with applicable rules and regulations, and with applicable MSRB rules, which directly serve to protect investors, municipal entities, obligated persons, and the public interest. The MSRB believes extending the relief and affording dealers the option to conduct remote inspections in calendar year 2022, until June 30, 2022, is a prudent regulatory approach while continuing to serve the important investor protection objectives of the inspection requirements under these unique circumstances.

In a time when faced with unique challenges resulting from the sustained pandemic, the proposed rule change will afford dealers the ability to safeguard the health and safety of their personnel and to more effectively allocate resources to serve and promote the protection of investors, municipal entities, obligated persons and the public interest. In addition, the

[5] *See* Exchange Act Release No. 88694 (April 20, 2020), 85 FR 23088 (April 24, 2020) (File No. SR–MSRB–2020–01).

[6] *See* Exchange Act Release No. 90621 (December 9, 2020), 85 FR 81254 (December 15, 2020) (File No. SR–MSRB–2020–09).

[7] See The Centers for Disease Control and Prevention (''CDC''), What You Need to Know about Variants (stating, in part, that ''the Delta variant causes more infections and spreads faster than earlier forms of the virus that causes COVID–19'') available at *https://www.cdc.gov/coronavirus/2019-ncov/variants/variant.html* (updated September 3, 2021).

[8] On September 13, 2021, FINRA made a filing with the SEC for immediate effectiveness, noting that while some firms have taken affirmative steps to develop and implement phased-in office re-entry plans based on local conditions, there are many other firms that have not. *See* Release No. 34–93002 (September 15, 2021), 86 FR 52508 (September 21, 2021) (File No. SR–FINRA–2021–023).

[9] As previously noted, a temporary location established in response to the implementation of a business continuity plan is not deemed an office for purposes of complying with the office inspection obligations, under MSRB Rule G–27. *See supra* note 5.

[10] 15 U.S.C. 78*o*–4(b)(2)(C).

proposed rule change will also alleviate some of the operational challenges dealers may be experiencing, which will allow them to more effectively allocate resources to the operations that facilitate transactions in municipal securities and municipal financial products, to remove impediments to and perfect the mechanism of a free and open market in municipal securities and municipal financial products.

B. Self-Regulatory Organization's Statement on Burden on Competition

Section 15B(b)(2)(C) of the Act requires that MSRB rules be designed not to impose any burden on competition that is not necessary or appropriate in furtherance of the purposes of the Act.[11] In fact, the MSRB does not believe the proposed rule change will have any burden on competition because the proposed rule change treats all dealers equally in that all dealers have the option to elect to conduct remote inspections remotely through June 30, 2022. The goal of the proposed rule change is to grant additional time for dealers to meet their office inspection obligations, under Supplementary Material .01 of Rule G–27, while also determining how to best implement their return to office plans in a safe and effective manner during the exigent circumstances of the COVID–19 pandemic. The temporary relief afforded does not alter dealers underlying obligations under the rule.

C. Self-Regulatory Organization's Statement on Comments on the Proposed Rule Change Received From Members, Participants, or Others

Written comments were neither solicited nor received on the proposed rule change.

III. Date of Effectiveness of the Proposed Rule Change and Timing for Commission Action

Because the foregoing proposed rule change does not: (i) Significantly affect the protection of investors or the public interest; (ii) impose any significant burden on competition; and (iii) become operative for 30 days from the date on which it was filed, or such shorter time as the Commission may designate, it has become effective pursuant to Section 19(b)(3)(A) of the Act[12] and Rule 19b–4(f)(6)[13] thereunder. At any time within 60 days of the filing of the proposed rule change, the Commission summarily may temporarily suspend such rule change if it appears to the Commission that such action is necessary or appropriate in the public interest, for the protection of investors, or otherwise in furtherance of the purposes of the Act.

IV. Solicitation of Comments

Interested persons are invited to submit written data, views, and arguments concerning the foregoing, including whether the proposed rule change is consistent with the Act. Comments may be submitted by any of the following methods:

Electronic Comments

- Use the Commission's internet comment form (*http://www.sec.gov/rules/sro.shtml*); or
- Send an email to *rule-comments@sec.gov.* Please include File Number SR–MSRB–2021–06 on the subject line.

Paper Comments

- Send paper comments in triplicate to Secretary, Securities and Exchange Commission, 100 F Street NE, Washington, DC 20549–1090.

All submissions should refer to File Number SR–MSRB–2021–06. This file number should be included on the subject line if email is used. To help the Commission process and review your comments more efficiently, please use only one method. The Commission will post all comments on the Commission's internet website (*http://www.sec.gov/rules/sro.shtml*). Copies of the submission, all subsequent amendments, all written statements with respect to the proposed rule change that are filed with the Commission, and all written communications relating to the proposed rule change between the Commission and any person, other than those that may be withheld from the public in accordance with the provisions of 5 U.S.C. 552, will be available for website viewing and printing in the Commission's Public Reference Room, 100 F Street NE, Washington, DC 20549 on official business days between the hours of 10:00 a.m. and 3:00 p.m. Copies of the filing also will be available for inspection and copying at the principal office of the MSRB. All comments received will be posted without change. Persons submitting comments are cautioned that we do not redact or edit personal identifying information from comment submissions. You should submit only information that you wish to make available publicly. All submissions should refer to File Number SR–MSRB–2021–06 and should be submitted on or before November 23, 2021.

For the Commission, by the Office of Municipal Securities, pursuant to delegated authority.[14]

J. Matthew DeLesDernier,

Assistant Secretary.

[FR Doc. 2021–23809 Filed 11–1–21; 8:45 am]

BILLING CODE 8011–01–P

[11] *Id.*

[12] 15 U.S.C. 78s(b)(3)(A).

[13] 17 CFR 240.19b–4(f)(6).

[14] 17 CFR 200.30–3a(a)(2).

SECURITIES AND EXCHANGE COMMISSION

[Release No. 34–93437; File Nos. SR–BX–2021–018; SR–C2–2021–008; SR–CBOE–2021–030; SR–CboeBYX–2021–011; SR–CboeBZX–2021–034; SR–CboeEDGA–2021–010; SR–CboeEDGX–2021–024; SR–GEMX–2021–03; SR–ISE–2021–08; SR–MRX–2021–05; SR–NASDAQ–2021–029; SR–PHLX–2021–25]

Self-Regulatory Organizations; Cboe BYX Exchange, Inc.; Cboe BZX Exchange, Inc.; Cboe C2 Exchange, Inc.; Cboe EDGA Exchange, Inc.; Cboe EDGX Exchange, Inc., Cboe Exchange, Inc.; NASDAQ BX, Inc.; Nasdaq GEMX, LLC; Nasdaq ISE, LLC; Nasdaq MRX, LLC; NASDAQ PHLX LLC and The NASDAQ Stock Market LLC; Notice of Designation of Longer Period for Commission Action on Proceedings To Determine Whether To Approve or Disapprove Proposed Rule Changes To Adopt a Fee Schedule To Establish Fees for Industry Members Related to the National Market System Plan Governing the Consolidated Audit Trail

October 27, 2021.

On April 21, 2021, Cboe BYX Exchange, Inc., Cboe BZX Exchange, Inc., Cboe C2 Exchange, Inc., Cboe EDGA Exchange, Inc., Cboe EDGX Exchange, Inc., Cboe Exchange, Inc., NASDAQ BX, Inc., Nasdaq GEMX, LLC, Nasdaq ISE, LLC, Nasdaq MRX, LLC, NASDAQ PHLX LLC, The NASDAQ Stock Market LLC (collectively, the ''Nasdaq and Cboe Participants'') filed with the Securities and Exchange Commission (''Commission''), pursuant to Section 19(b)(1) of the Securities Exchange Act of 1934 (''Act'')[1] and Rule 19b–4 thereunder,[2] proposed rule changes[3] to adopt a fee schedule to

[1] 15 U.S.C. 78s(b)(1).

[2] 17 CFR 240.19b–4.

[3] Securities Exchange Act Release Nos. 91750 (May 4, 2021), 86 FR 25045 (May 10, 2021) (SR–BX–2021–018); 91751 (May 4, 2021), 86 FR 24941 (May 10, 2021) (SR–PHLX–2021–25); 91752 (May 4, 2021), 86 FR 24921 (May 10, 2021) (SR–NASDAQ–2021–029); 91753 (May 4, 2021), 86 FR 24994 (May 10, 2021) (SR–MRX–2021–05); 91755 (May 4, 2021), 86 FR 25035 (May 10, 2021) (SR–ISE–2021–08); 91756 (May 4, 2021), 86 FR 24979 (May 10, 2021) (SR–GEMX–2021–03); 91757 (May 4, 2021), 86 FR 24911 (May 10, 2021) (SR–C2–2021–008); 91758 (May 4, 2021), 86 FR 25004 (May 10, 2021) (SR–CboeEDGX–2021–024); 91759 (May 4, 2021), 86 FR

establish fees for Industry Members[4] related to the National Market System Plan Governing the Consolidated Audit Trail (''CAT NMS Plan'').[5] The proposed rule changes were immediately effective upon filing with the Commission pursuant to Section 19(b)(3)(A) of the Act.[6] The proposed rule changes were published for comment in the **Federal Register** on May 10, 2021.[7] On June 17, 2021, the Commission temporarily suspended and initiated proceedings to determine whether to approve or disapprove the proposed rule changes.[8] The Commission has received no comments on the proposed rule changes.

Section 19(b)(2) of the Act[9] provides that, after instituting proceedings, the Commission shall issue an order approving or disapproving a proposed rule change not later than 180 days after the date of publication of notice of filing of the proposed rule change.[10] The Commission may, however, extend the period for issuing an order approving or disapproving the proposed rule change by not more than 60 days if the Commission determines that a longer period is appropriate and publishes the reasons for such determination.[11] The 180th day for the proposed rule changes is November 6, 2021.

The Commission is extending the 180-day time period for Commission action on each of the proposed rule changes. The Commission finds it appropriate to designate a longer period within which to issue an order approving or disapproving the proposed rule changes so that it has sufficient time to consider the proposed rule changes.

Accordingly, the Commission, pursuant to Section 19(b)(2) of the Act,[12] designates January 5, 2022 as the date by which the Commission shall either approve or disapprove the proposed rule changes (File Nos. SR–BX–2021–018; SR–C2–2021–008; SR–CBOE–2021–030; SR–CboeBYX–2021–011; SR–CboeBZX–2021–034; SR–CboeEDGA–2021–010; SR–CboeEDGX–2021–024; SR–GEMX–2021–03; SR–ISE–2021–08; SR–MRX–2021–05; SR–NASDAQ–2021–029; SR–PHLX–2021–25).

For the Commission, by the Division of Trading and Markets, pursuant to delegated authority.[13]

J. Matthew DeLesDernier,

Assistant Secretary.

[FR Doc. 2021–23817 Filed 11–1–21; 8:45 am]

BILLING CODE 8011–01–P

24956 (May 10, 2021) (SR–CboeEDGA–2021–010); 91760 (May 4, 2021), 86 FR 24966 (May 10, 2021) (SR–CBOE–2021–030); 91761 (May 4, 2021), 86 FR 25016 (May 10, 2021) (SR–CboeBYX–2021–011); and 91762 (May 4, 2021), 86 FR 24931 (May 10, 2021) (SR–CboeBZX–2021–034).

[4] The CAT NMS Plan defines ''Industry Member'' as ''a member of a national securities exchange or a member of a national securities association.'' *See* CAT NMS Plan, *infra* note 5, at Section 1.1.

[5] The CAT NMS Plan is a national market system plan approved by the Commission pursuant to Section 11A of the Act and the rules and regulations thereunder. *See* Securities Exchange Act Release No. 79318 (November 15, 2016), 81 FR 84696 (November 23, 2016).

[6] 15 U.S.C. 78s(b)(3)(A). A proposed rule change may take effect upon filing with the Commission if it is designated by the exchange as ''establishing or changing a due, fee, or other charge imposed by the self-regulatory organization on any person, whether or not the person is a member of the self-regulatory organization.'' 15 U.S.C. 78s(b)(3)(A)(ii).

[7] *See supra* note 3.

[8] Securities Exchange Act Release No. 92207, 86 FR 33448 (June 24, 2021).

[9] 15 U.S.C 78s(b)(2).

[10] 15 U.S.C. 78s(b)(2)(B)(ii)(I).

[11] 15 U.S.C. 78s(b)(2)(B)(ii)(II)(aa).

[12] 15 U.S.C. 78s(b)(2).

[13] 17 CFR 200.30–3(a)(57).

SMALL BUSINESS ADMINISTRATION

[Disaster Declaration #17246 and #17247; Oregon Disaster Number OR–00126]

Administrative Declaration of a Disaster for the State of Oregon

AGENCY: U.S. Small Business Administration.

ACTION: Notice.

SUMMARY: This is a notice of an Administrative declaration of a disaster for the State of Oregon dated 10/28/2021.

Incident: Bootleg Fire.

Incident Period: 07/06/2021 through 08/15/2021.

DATES: Issued on 10/28/2021.

Physical Loan Application Deadline Date: 12/27/2021.

Economic Injury (EIDL) Loan Application Deadline Date: 07/28/2022.

ADDRESSES: Submit completed loan applications to: U.S. Small Business Administration, Processing and Disbursement Center, 14925 Kingsport Road, Fort Worth, TX 76155.

FOR FURTHER INFORMATION CONTACT: A. Escobar, Office of Disaster Assistance, U.S. Small Business Administration, 409 3rd Street SW, Suite 6050, Washington, DC 20416, (202) 205–6734.

SUPPLEMENTARY INFORMATION: Notice is hereby given that as a result of the Administrator's disaster declaration, applications for disaster loans may be filed at the address listed above or other locally announced locations.

The following areas have been determined to be adversely affected by the disaster:

Primary Counties: Klamath.

Contiguous Counties:

Oregon: Deschutes, Douglas, Jackson, Lake, Lane.

California: Modoc, Siskiyou.

The Interest Rates are:

	Percent
For Physical Damage:	
Homeowners with Credit Available Elsewhere	3.250
Homeowners without Credit Available Elsewhere	1.625
Businesses with Credit Available Elsewhere	5.760
Businesses without Credit Available Elsewhere	2.880
Non-Profit Organizations with Credit Available Elsewhere	2.000
Non-Profit Organizations without Credit Available Elsewhere	2.000
For Economic Injury:	
Businesses & Small Agricultural Cooperatives without Credit Available Elsewhere	2.880
Non-Profit Organizations without Credit Available Elsewhere	2.000

The number assigned to this disaster for physical damage is 17246 5 and for economic injury is 17247 0.

The States which received an EIDL Declaration # are California, Oregon.

(Catalog of Federal Domestic Assistance Number 59008)

Isabella Guzman,

Administrator.

[FR Doc. 2021–23889 Filed 11–1–21; 8:45 am]

BILLING CODE 8026–03–P

SMALL BUSINESS ADMINISTRATION

[Disaster Declaration #17143 and #17144; New Jersey Disaster Number NJ–00062]

Presidential Declaration Amendment of a Major Disaster for the State of New Jersey

AGENCY: U.S. Small Business Administration.

ACTION: Amendment 4.

SUMMARY: This is an amendment of the Presidential declaration of a major disaster for the State of New Jersey (FEMA–4614–DR), dated 09/05/2021.

Incident: Remnants of Hurricane Ida.

Incident Period: 09/01/2021 through 09/03/2021.

DATES: Issued on 10/26/2021.

Physical Loan Application Deadline Date: 12/06/2021.

Economic Injury (EIDL) Loan Application Deadline Date: 06/06/2022.

ADDRESSES: Submit completed loan applications to: U.S. Small Business Administration, Processing and

Disbursement Center, 14925 Kingsport Road, Fort Worth, TX 76155.

FOR FURTHER INFORMATION CONTACT: A. Escobar, Office of Disaster Assistance, U.S. Small Business Administration, 409 3rd Street SW, Suite 6050, Washington, DC 20416, (202) 205–6734.

SUPPLEMENTARY INFORMATION: The notice of the President's major disaster declaration for the State of New Jersey, dated 09/05/2021, is hereby amended to extend the deadline for filing applications for physical damages as a result of this disaster to 12/06/2021.

All other information in the original declaration remains unchanged.

(Catalog of Federal Domestic Assistance Number 59008)

James Rivera,

Associate Administrator for Disaster Assistance.

[FR Doc. 2021–23888 Filed 11–1–21; 8:45 am]

BILLING CODE 8026–03–P

SMALL BUSINESS ADMINISTRATION

[Disaster Declaration #17244 and #17245; Virginia Disaster Number VA–00097]

Presidential Declaration of a Major Disaster for Public Assistance Only for the Commonwealth of Virginia

AGENCY: U.S. Small Business Administration.

ACTION: Notice.

SUMMARY: This is a Notice of the Presidential declaration of a major disaster for Public Assistance Only for the Commonwealth of Virginia (FEMA–4628–DR), dated 10/26/2021.

Incident: Flooding, Landslides, and Mudslides.

Incident Period: 08/30/2021 through 08/31/2021.

DATES: Issued on 10/26/2021.

Physical Loan Application Deadline Date: 12/27/2021.

Economic Injury (EIDL) Loan Application Deadline Date: 07/26/2022.

ADDRESSES: Submit completed loan applications to: U.S. Small Business Administration, Processing and Disbursement Center, 14925 Kingsport Road, Fort Worth, TX 76155.

FOR FURTHER INFORMATION CONTACT: A. Escobar, Office of Disaster Assistance, U.S. Small Business Administration, 409 3rd Street SW, Suite 6050, Washington, DC 20416, (202) 205–6734.

SUPPLEMENTARY INFORMATION: Notice is hereby given that as a result of the President's major disaster declaration on 10/26/2021, Private Non-Profit organizations that provide essential services of a governmental nature may file disaster loan applications at the address listed above or other locally announced locations.

The following areas have been determined to be adversely affected by the disaster:

Primary Counties: Buchanan.

The Interest Rates are:

	Percent
For Physical Damage:	
Non-Profit Organizations with Credit Available Elsewhere ...	2.000
Non-Profit Organizations without Credit Available Elsewhere	2.000
For Economic Injury:	
Non-Profit Organizations without Credit Available Elsewhere	2.000

The number assigned to this disaster for physical damage is 17244 6 and for economic injury is 17245 0.

(Catalog of Federal Domestic Assistance Number 59008)

James Rivera,

Associate Administrator for Disaster Assistance.

[FR Doc. 2021–23890 Filed 11–1–21; 8:45 am]

BILLING CODE 8026–03–P

SMALL BUSINESS ADMINISTRATION

[Disaster Declaration #17121 and #17122; Louisiana Disaster Number LA–00115]

Presidential Declaration Amendment of a Major Disaster for the State of Louisiana

AGENCY: U.S. Small Business Administration.

ACTION: Amendment 2.

SUMMARY: This is an amendment of the Presidential declaration of a major disaster for the State of Louisiana (FEMA–4611–DR), dated 08/29/2021.

Incident: Hurricane Ida.

Incident Period: 08/26/2021 through 09/03/2021.

DATES: Issued on 10/26/2021.

Physical Loan Application Deadline Date: 11/29/2021.

Economic Injury (EIDL) Loan Application Deadline Date: 05/31/2022.

ADDRESSES: Submit completed loan applications to: U.S. Small Business Administration, Processing and Disbursement Center, 14925 Kingsport Road, Fort Worth, TX 76155.

FOR FURTHER INFORMATION CONTACT: A, Escobar, Office of Disaster Assistance, U.S. Small Business Administration, 409 3rd Street SW, Suite 6050, Washington, DC 20416, (202) 205–6734.

SUPPLEMENTARY INFORMATION: The notice of the President's major disaster declaration for the State of Louisiana, dated 08/29/2021, is hereby amended to extend the deadline for filing applications for physical damages as a result of this disaster to 11/29/2021.

All other information in the original declaration remains unchanged.

(Catalog of Federal Domestic Assistance Number 59008)

James Rivera,

Associate Administrator for Disaster Assistance.

[FR Doc. 2021–23886 Filed 11–1–21; 8:45 am]

BILLING CODE 8026–03–P

DEPARTMENT OF TRANSPORTATION

Office of the Secretary

[Docket No. DOT–OST–2021–0123]

Notice of Rights and Protections Available Under the Federal Antidiscrimination and Whistleblower Protection Laws

AGENCY: Office of the Secretary, Department of Transportation.

ACTION: No FEAR Act notice.

SUMMARY: This Notice implements Title II of the Notification and Federal Employee Antidiscrimination and Retaliation Act of 2002 (No FEAR Act of 2002). In doing so, the Department of Transportation notifies all employees, former employees, and applicants for Federal employment of the rights and protections available to them under the Federal Anti-discrimination and Whistleblower Protection Laws.

FOR FURTHER INFORMATION CONTACT: Yvette Rivera, Associate Director, Equity and Access Division (S–32), Departmental Office of Civil Rights, Office of the Secretary, U.S. Department of Transportation, 1200 New Jersey Avenue SE, Room W78–306, Washington, DC 20590, 202–366–5131 or by email at *Yvette.Rivera@dot.gov.*

SUPPLEMENTARY INFORMATION:

Electronic Access

You may retrieve this document online through the Federal Document Management System at *http://www.regulations.gov.* Electronic retrieval instructions are available under the help section of the website.

No FEAR Act Notice

On May 15, 2002, Congress enacted the ''Notification and Federal Employee Antidiscrimination and Retaliation Act of 2002,'' now recognized as the No FEAR Act (Pub. L. 107–174). The No

FEAR Act was amended on January 1, 2021, by the ''Elijah E. Cummings Federal Employee Antidiscrimination Act of 2020.'' One purpose of the No FEAR Act is to ''require that Federal agencies be accountable for violations of antidiscrimination and whistleblower protection laws.'' (Pub. L. 107–174, Summary). In support of this purpose, Congress found that ''agencies cannot be run effectively if those agencies practice or tolerate discrimination.'' (Pub. L. 107–174, Title I, General Provisions, section 101(1)). The No FEAR Act also requires the United States Department of Transportation (USDOT) to issue this Notice to all USDOT employees, former USDOT employees, and applicants for USDOT employment. This Notice informs such individuals of the rights and protections available under Federal antidiscrimination and whistleblower protection laws.

Antidiscrimination Laws

A Federal agency cannot discriminate against an employee or applicant with respect to the terms, conditions, or privileges of employment because of race, color, religion, sex (including gender identity and sexual orientation), national origin, age, disability, marital status, genetic information, political affiliation, or in retaliation for a protected activity. One or more of the following statutes prohibit discrimination on these bases: 5 U.S.C. 2302(b)(1), 29 U.S.C. 631, 29 U.S.C. 633a, 29 U.S.C. 206(d), 29 U.S.C. 791, 42 U.S.C. 2000e–16 and 2000ff.

If you believe you have experienced unlawful discrimination on the bases of race, color, religion, sex (including gender identity and sexual orientation), national origin, age, retaliation, genetic information, and/or disability, you must contact a USDOT Equal Employment Opportunity (EEO) counselor within 45 calendar days of the alleged discriminatory action, or in the case of a personnel action, within 45 calendar days of the effective date of the action to pursue any legal remedy. A directory of USDOT EEO counselors is available on the Departmental Office of Civil Rights website at *http://www.transportation.gov/civil-rights;* you can also contact the Departmental Office of Civil Rights by phone at 202–366–4648 for more information. Once you contact the EEO counselor, you will be offered the opportunity to resolve the matter through the informal complaint process; if you are unable to resolve the matter through the informal complaint process, you can file a formal complaint of discrimination with USDOT (See, *e.g.,* 29 CFR part 1614). Parties who complete the informal complaint process are provided with an electronic Individual Complaint of Employment Discrimination Form. While the Federal Government is on maximum telework, the Departmental Office of Civil Rights is accepting the Form only electronically at *https://secure.dot.gov/form/eeoc* or by email at *Patricia.Fields@dot.gov.* Once the Federal Government is no longer on maximum telework status, you may choose to submit the Form electronically, by mail to the EEO Complaints and Investigations Division of the Departmental Office of Civil Rights at 1200 New Jersey Avenue SE, W76–401, Washington, DC 20590, or by Fax to 202–493–2064. You may also contact the EEO Complaints and Investigations Division, Departmental Office of Civil Rights by phone at 202–366–9370 or by email at *DOCR_CMB@dot.gov* if you need additional assistance.

If you believe you experienced unlawful discrimination based on age, you must either contact an EEO counselor as noted above, or file a civil action in a United States District Court under the Age Discrimination in Employment Act against the head of the alleged discriminating agency. If you choose to file a civil action, you must give notice of intent to sue to the Equal Employment Opportunity Commission (EEOC) within 180 days of the alleged discriminatory action, and not less than 30 days before filing a civil action. You may file such notice in writing with the EEOC via mail at P.O. Box 77960, Washington, DC 20013, the EEOC Public Portal at *https://www.eeoc.gov/employees/charge.cfm,* hand delivery at 131 M St. NE, Washington, DC 20507, or Fax at 202–663–7022.

If you are alleging discrimination based on marital status or political affiliation, you may file a written discrimination complaint with the U.S. Office of Special Counsel (OSC) using Form OSC–14. Form OSC–14 is available online for electronic submission at the OSC website *http://www.osc.gov,* under the tab ''File a Complaint.'' While the Federal Government is on maximum telework, OSC is accepting Form OSC–14 only electronically. When the Federal Government is no longer on maximum telework, you may choose to submit the form electronically or complete Form OSC–14 and mail it to the Complaints Examining Unit, U.S. Office of Special Counsel at 1730 M Street NW, Suite 218, Washington, DC 20036–4505. You can download Form OSC–14 from *https://osc.gov/Resources/Pages/Forms.aspx.* You also have the option to call the Complaints Examining Unit at 1–800–872–9855 for additional assistance. In the alternative (or in some cases, in addition), you may pursue a discrimination complaint by filing a grievance through the USDOT administrative or negotiated grievance procedures, if such procedures apply and are available.

If you are alleging compensation discrimination pursuant to the Equal Pay Act, and wish to pursue your allegations through the administrative process, you must contact an EEO counselor within 45 calendar days of the alleged discriminatory action, as such complaints are processed under EEOC's regulations at 29 CFR part 1614. Alternatively, you may file a civil action in a court of competent jurisdiction within two years, or if the violation is willful, three years of the date of the alleged violation, regardless of whether you pursued any administrative complaint processing. The filing of a complaint or appeal pursuant to 29 CFR part 1614 shall not toll the time for filing a civil action.

Whistleblower Protection Laws

A USDOT employee with authority to take, direct others to take, recommend, or approve any personnel action must not use that authority to take, or fail to take, or threaten to take a personnel action against an employee or applicant because of a disclosure of information by that individual that is reasonably believed to evidence violations of law, rule, or regulation; gross mismanagement; gross waste of funds; an abuse of authority; or a substantial and specific danger to public health or safety, unless the disclosure of such information is specifically prohibited by law and such information is specifically required by Executive Order to be kept secret in the interest of national defense or the conduct of foreign affairs.

Retaliation against a USDOT employee or applicant for making a protected disclosure is prohibited (5 U.S.C. 2302(b)(8)). If you believe you are a victim of whistleblower retaliation, you may file a written complaint with the U.S. Office of Special Counsel using Form OSC–14. While the Federal Government is on maximum telework, OSC is accepting Form OSC–14 only electronically. When the Federal Government is no longer on maximum telework, you may choose to submit the form electronically or complete Form OSC–14 and mail it to the Complaints Examining Unit, U.S. Office of Special Counsel at 1730 M Street NW, Suite 218, Washington, DC 20036–4505. You may also contact the USDOT Office of Inspector General Hotline by phone at 1–800–424–8071, by email at *hotline@oig.dot.gov,* or online at *https://www.oig.dot.gov/hotline.* In addition, when the Federal Government is no longer on maximum telework, you may also contact the USDOT Office of Inspector General by mail at 1200 New Jersey Avenue SE, West Bldg 7th Floor, Washington, DC 20590.

Retaliation for Engaging in Protected Activity

A Federal agency cannot retaliate against an employee or applicant because that individual exercises his or her rights under any of the Federal antidiscrimination or whistleblower protection laws listed above. If you believe that you are the victim of retaliation for engaging in protected activity, you must follow, as appropriate, the procedures described in the Antidiscrimination Laws and Whistleblower Protection Laws sections or, if applicable, the administrative or negotiated grievance procedures in order to pursue any legal remedy.

Disciplinary Actions

Under existing laws, USDOT retains the right, where appropriate, to discipline a USDOT employee who engages in conduct that is inconsistent with Federal Antidiscrimination and Whistleblower Protection laws up to and including removal from Federal service. If USDOT takes an adverse action under 5 U.S.C. 7512 against an employee for a discriminatory act, it must include a notation of the adverse action and the reason for the action in the employee's personnel record. If OSC initiates an investigation under 5 U.S.C. 1214, USDOT must seek approval from the Special Counsel to discipline employees for, among other activities, engaging in prohibited retaliation (5 U.S.C. 1214). Nothing in the No FEAR Act alters existing laws or permits an agency to take unfounded disciplinary action against a USDOT employee, or to violate the procedural rights of a USDOT employee accused of discrimination.

Additional Information

For more information regarding the No FEAR Act regulations, refer to 5 CFR part 724, as well as the appropriate office(s) within your agency (*e.g.,* EEO/civil rights offices, human resources offices, or legal offices). You can find additional information regarding Federal antidiscrimination, whistleblower protection, and retaliation laws at the EEOC website at *http://www.eeoc.gov* and the OSC website at *http://www.osc.gov.*

Existing Rights Unchanged

Pursuant to section 205 of the No FEAR Act, neither the No FEAR Act nor this notice creates, expands, or reduces any rights otherwise available to any employee, former employee, or applicant under the laws of the United States, including the provisions of law specified in 5 U.S.C. 2302(d).

Issued in Washington, DC, on October 26, 2021.

Irene Marion,

Director, Departmental Office of Civil Rights, U.S. Department of Transportation.

[FR Doc. 2021–23814 Filed 11–1–21; 8:45 am]

BILLING CODE 4910–9X–P

DEPARTMENT OF VETERANS AFFAIRS

[OMB Control No. 2900–0666]

Agency Information Collection Activity: Information Regarding Apportionment of Beneficiary's Award; Withdrawn

AGENCY: Veterans Benefits Administration, Department of Veterans Affairs.

ACTION: Notice; withdrawal.

SUMMARY: On Wednesday, October 27, 2021, the Veterans Benefits Administration published a notice in the **Federal Register** announcing an opportunity for public comment on the proposed collection Information Regarding Apportionment of Beneficiary's Award (VA Form 21–0788). This notice was published in error; therefore, this document corrects that error by withdrawing this FR notice, document number 2021–23380.

DATES: As of October 27, 2021, the FR notice published at 86 FR 59449 on Wednesday, October 27, 2021, is withdrawn.

FOR FURTHER INFORMATION CONTACT: Maribel Aponte, Office of Enterprise and Integration, Data Governance Analytics (008), 1717 H Street NW, Washington, DC 20006, (202) 266–4688 or email *maribel.aponte@va.gov.*

SUPPLEMENTARY INFORMATION: FR Doc. 2021–23380, published on October 27, 2021 (86 FR 59449), is withdrawn by this notice.

By direction of the Secretary.

Maribel Aponte,

VA PRA Clearance Officer, Office of Enterprise and Integration/Data Governance Analytics, Department of Veterans Affairs.

[FR Doc. 2021–23797 Filed 11–1–21; 8:45 am]

BILLING CODE 8320–01–P

DEPARTMENT OF VETERANS AFFAIRS

[OMB Control No. 2900–0618]

Agency Information Collection Activity Under OMB Review: Application by Insured Terminally Ill Person for Accelerated Benefit

AGENCY: Veterans Benefits Administration, Department of Veterans Affairs.

ACTION: Notice.

SUMMARY: In compliance with the Paperwork Reduction Act (PRA) of 1995, this notice announces that the Veterans Benefits Administration (VBA), Department of Veterans Affairs, will submit the collection of information abstracted below to the Office of Management and Budget (OMB) for review and comment. The PRA submission describes the nature of the information collection and its expected cost and burden and it includes the actual data collection instrument.

DATES: Written comments and recommendations for the proposed information collection should be sent within 30 days of publication of this notice to *www.reginfo.gov/public/do/PRAMain.* Find this particular information collection by selecting ''Currently under 30-day Review—Open for Public Comments'' or by using the search function. Refer to ''OMB Control No. 2900–0618.

FOR FURTHER INFORMATION CONTACT: Maribel Aponte, Office of Enterprise and Integration, Data Governance Analytics (008), 1717 H Street NW, Washington, DC 20006, (202) 266–4688 or email *maribel.aponte@va.gov.* Please refer to ''OMB Control No. 2900–0618'' in any correspondence.

SUPPLEMENTARY INFORMATION:

Authority: Public Law 104–13; 44 U.S.C. 3501–3521.

Title: Application by Insured Terminally Ill Person for Accelerated Benefit, SGLV 8284.

OMB Control Number: 2900–0618.

Type of Review: Extension of a currently approved collection.

Abstract: VA has amended regulations for the Servicemembers' Group Life Insurance (SGLI) and Veterans' Group Life Insurance (VGLI) programs to add accelerated death benefit (Accelerated Benefit) provisions that permit terminally ill policyholders access to the death benefits of their policies before they die. Traditionally, an individual purchases life insurance in order to safeguard his or her dependents against major financial loss due to his or her death. Life insurance serves to replace the lost income of an insured and to provide for his or her final expenses. In recent years, the insurance industry has recognized the financial needs of terminally ill policyholders and has begun offering policies with accelerated benefit provisions. A recent statutory amendment (Section 302 of the Veterans Programs Enhancement Act of 1998, Pub. L. 105–368, 112 Stat. 3315, 3332–3333) added section 1980 to Title 38, United States Code, which extends and accelerated benefit option to terminally ill persons insured in the SGLI and VGLI programs.

An agency may not conduct or sponsor, and a person is not required to respond to a collection of information unless it displays a currently valid OMB control number. The **Federal Register** Notice with a 60-day comment period soliciting comments on this collection of information was published at 86 FR 161 on August 24, 2021, pages 47374 and 47375.

Affected Public: Individuals or Households.

Estimated Annual Burden: 40 hours.

Estimated Average Burden per Respondent: 12 minutes.

Frequency of Response: Once.

Estimated Number of Respondents: 200.

By direction of the Secretary.

Maribel Aponte,

VA PRA Clearance Officer, Office of Enterprise and Integration, Data Governance Analytics, Department of Veterans Affairs.

[FR Doc. 2021–23854 Filed 11–1–21; 8:45 am]

BILLING CODE 8320–01–P

DEPARTMENT OF VETERANS AFFAIRS

[OMB Control No. 2900–0161]

Agency Information Collection Activity Under OMB Review: Medical Expense Report

AGENCY: Veterans Benefits Administration, Department of Veterans Affairs.

ACTION: Notice.

SUMMARY: In compliance with the Paperwork Reduction Act (PRA) of 1995, this notice announces that the Veterans Benefits Administration (VBA), Department of Veterans Affairs, will submit the collection of information abstracted below to the Office of Management and Budget (OMB) for review and comment. The PRA submission describes the nature of the information collection and its expected cost and burden and it includes the actual data collection instrument.

DATES: Written comments and recommendations for the proposed information collection should be sent within 30 days of publication of this notice to *www.reginfo.gov/public/do/PRAMain.* Find this particular information collection by selecting ''Currently under 30-day Review—Open for Public Comments'' or by using the search function. Refer to ''OMB Control No. 2900–0161.''

FOR FURTHER INFORMATION CONTACT: Maribel Aponte, Office of Enterprise and Integration, Data Governance Analytics (008), 1717 H Street NW, Washington, DC 20006, (202) 266–4688 or email *maribel.aponte@va.gov.* Please refer to ''OMB Control No. 2900–0161'' in any correspondence.

SUPPLEMENTARY INFORMATION:

Authority: 38 U.S.C. 1503; 38 CFR 3.262, 3.271 & 3.272.

Title: Medical Expense Report (VA Form 21P–8416).

OMB Control Number: 2900–0161.

Type of Review: Extension of a previously approved collection.

Abstract: A claimant's eligibility for needs-based pension programs are determined in part by countable family income and certain deductible expenses. When a claimant is awarded compensation by another entity or government agency based on personal injury or death, the compensation is usually countable income for VA purposes (38 CFR 3.262(i)). However, medical, legal or other expenses incident to the injury or death, or incident to the collection or recovery of compensation, may be deducted from the amount of the award or settlement (38 CFR 3.271(g) and 3.272(g)). In these situations, VBA uses VA Form 21P–8416 *Medical Expense Report,* to gather information that is necessary to determine eligibility for income-based benefits and the rate payable; without this information, determination of eligibility would not be possible. This is an extension only with no substantive changes. The burden remains the same.

An agency may not conduct or sponsor, and a person is not required to respond to a collection of information unless it displays a currently valid OMB control number. The **Federal Register** Notice with a 60-day comment period soliciting comments on this collection of information was published at 86 FR 161 on August 24, 2021, page 47375.

Affected Public: Individuals or Households.

Estimated Annual Burden: 30,000.

Estimated Average Burden per Respondent: 30 minutes.

Frequency of Response: Once.

Estimated Number of Respondents: 60,000.

By direction of the Secretary.

Maribel Aponte,

VA PRA Clearance Officer, Office of Enterprise and Integration, Data Governance Analytics, Department of Veterans Affairs.

[FR Doc. 2021–23665 Filed 11–1–21; 8:45 am]

BILLING CODE 8320–01–P

Reader Aids

Federal Register

Vol. 86, No. 209

Tuesday, November 2, 2021

CUSTOMER SERVICE AND INFORMATION

Federal Register/Code of Federal Regulations	
General Information, indexes and other finding aids	**202–741–6000**
Laws	**741–6000**
Presidential Documents	
Executive orders and proclamations	**741–6000**
The United States Government Manual	**741–6000**
Other Services	
Electronic and on-line services (voice)	**741–6020**
Privacy Act Compilation	**741–6050**

ELECTRONIC RESEARCH

World Wide Web

Full text of the daily Federal Register, CFR and other publications is located at: **www.govinfo.gov.**

Federal Register information and research tools, including Public Inspection List and electronic text are located at: **www.federalregister.gov.**

E-mail

FEDREGTOC (Daily Federal Register Table of Contents Electronic Mailing List) is an open e-mail service that provides subscribers with a digital form of the Federal Register Table of Contents. The digital form of the Federal Register Table of Contents includes HTML and PDF links to the full text of each document.

To join or leave, go to **https://public.govdelivery.com/accounts/USGPOOFR/subscriber/new**, enter your email address, then follow the instructions to join, leave, or manage your subscription.

PENS (Public Law Electronic Notification Service) is an e-mail service that notifies subscribers of recently enacted laws.

To subscribe, go to **http://listserv.gsa.gov/archives/publaws-l.html and select** *Join or leave the list (or change settings);* then follow the instructions.

FEDREGTOC and **PENS** are mailing lists only. We cannot respond to specific inquiries.

Reference questions. Send questions and comments about the Federal Register system to: **fedreg.info@nara.gov**

The Federal Register staff cannot interpret specific documents or regulations.

FEDERAL REGISTER PAGES AND DATE, NOVEMBER

60159–60356 1
60357–60530 2

CFR PARTS AFFECTED DURING NOVEMBER

At the end of each month the Office of the Federal Register publishes separately a List of CFR Sections Affected (LSA), which lists parts and sections affected by documents published since the revision date of each title.

3 CFR

Administrative Orders:
Notices:
Notice of October 28, 2021 60355

5 CFR

890.....60357

10 CFR

Proposed Rules:
430.....60376

12 CFR

1026.....60357

13 CFR

Proposed Rules:
121.....60396

14 CFR

39 .....60159, 60162, 60364
71.....60165, 60367
Proposed Rules:
71 .....60183, 60185, 60186, 60416, 60418, 60421, 60423
121.....60424

22 CFR

126.....60165

32 CFR

44.....60166

40 CFR

52.....60170
180.....60178, 60368
Proposed Rules:
52.....60434

47 CFR

Proposed Rules:
1.....60436
2.....60436
64.....60189, 60438
101.....60436

48 CFR

532.....60372

50 CFR

622.....60373, 60374
648.....60375
665.....60182
Proposed Rules:
665.....60194

LIST OF PUBLIC LAWS

Note: No public bills which have become law were received by the Office of the Federal Register for inclusion in today's **List of Public Laws**.

Last List October 20, 2021

Public Laws Electronic Notification Service (PENS)

PENS is a free electronic mail notification service of newly enacted public laws. To subscribe, go to *http://listserv.gsa.gov/archives/publaws-l.html*

Note: This service is strictly for E-mail notification of new laws. The text of laws is not available through this service. **PENS** cannot respond to specific inquiries sent to this address.