AUTHENTICATED
U.S. GOVERNMENT
INFORMATION
GPO

# FEDERAL REGISTER

Vol. 86 Friday

No. 193 October 8, 2021

Pages 56181–56644

OFFICE OF THE FEDERAL REGISTER

The **FEDERAL REGISTER** (ISSN 0097–6326) is published daily, Monday through Friday, except official holidays, by the Office of the Federal Register, National Archives and Records Administration, under the Federal Register Act (44 U.S.C. Ch. 15) and the regulations of the Administrative Committee of the Federal Register (1 CFR Ch. I). The Superintendent of Documents, U.S. Government Publishing Office, is the exclusive distributor of the official edition. Periodicals postage is paid at Washington, DC.

The **FEDERAL REGISTER** provides a uniform system for making available to the public regulations and legal notices issued by Federal agencies. These include Presidential proclamations and Executive Orders, Federal agency documents having general applicability and legal effect, documents required to be published by act of Congress, and other Federal agency documents of public interest.

Documents are on file for public inspection in the Office of the Federal Register the day before they are published, unless the issuing agency requests earlier filing. For a list of documents currently on file for public inspection, see *www.federalregister.gov.*

**The seal of the National Archives and Records Administration authenticates the Federal Register** as the official serial publication established under the Federal Register Act. Under 44 U.S.C. 1507, the contents of the **Federal Register** shall be judicially noticed.

The **Federal Register** is published in paper and on 24x microfiche. It is also available online at no charge at *www.govinfo.gov*, a service of the U.S. Government Publishing Office.

The online edition of the **Federal Register** is issued under the authority of the Administrative Committee of the Federal Register as the official legal equivalent of the paper and microfiche editions (44 U.S.C. 4101 and 1 CFR 5.10). It is updated by 6:00 a.m. each day the **Federal Register** is published and includes both text and graphics from Volume 1, 1 (March 14, 1936) forward. For more information, contact the GPO Customer Contact Center, U.S. Government Publishing Office. Phone 202-512-1800 or 866-512-1800 (toll free). E-mail, *gpocusthelp.com.*

The annual subscription price for the **Federal Register** paper edition is $860 plus postage, or $929, for a combined **Federal Register, Federal Register** Index and List of CFR Sections Affected (LSA) subscription; the microfiche edition of the **Federal Register** including the **Federal Register** Index and LSA is $330, plus postage. Six month subscriptions are available for one-half the annual rate. The prevailing postal rates will be applied to orders according to the delivery method requested. The price of a single copy of the daily **Federal Register,** including postage, is based on the number of pages: $11 for an issue containing less than 200 pages; $22 for an issue containing 200 to 400 pages; and $33 for an issue containing more than 400 pages. Single issues of the microfiche edition may be purchased for $3 per copy, including postage. Remit check or money order, made payable to the Superintendent of Documents, or charge to your GPO Deposit Account, VISA, MasterCard, American Express, or Discover. Mail to: U.S. Government Publishing Office—New Orders, P.O. Box 979050, St. Louis, MO 63197-9000; or call toll free 1-866-512-1800, DC area 202-512-1800; or go to the U.S. Government Online Bookstore site, see *bookstore.gpo.gov.*

There are no restrictions on the republication of material appearing in the **Federal Register.**

**How To Cite This Publication:** Use the volume number and the page number. Example: 86 FR 12345.

**Postmaster:** Send address changes to the Superintendent of Documents, Federal Register, U.S. Government Publishing Office, Washington, DC 20402, along with the entire mailing label from the last issue received.

## SUBSCRIPTIONS AND COPIES

**PUBLIC**

**Subscriptions:**

| | |
|---|---|
| Paper or fiche | **202–512–1800** |
| Assistance with public subscriptions | **202–512–1806** |

**General online information** **202–512–1530; 1–888–293–6498**

**Single copies/back copies:**

| | |
|---|---|
| Paper or fiche | **202–512–1800** |
| Assistance with public single copies | **1–866–512–1800 (Toll-Free)** |

**FEDERAL AGENCIES**

**Subscriptions:**

Assistance with Federal agency subscriptions:

| | |
|---|---|
| Email | *FRSubscriptions@nara.gov* |
| Phone | **202–741–6000** |

The Federal Register Printing Savings Act of 2017 (Pub. L. 115-120) placed restrictions on distribution of official printed copies of the daily **Federal Register** to members of Congress and Federal offices. Under this Act, the Director of the Government Publishing Office may not provide printed copies of the daily **Federal Register** unless a Member or other Federal office requests a specific issue or a subscription to the print edition. For more information on how to subscribe use the following website link: *https://www.gpo.gov/frsubs.*

Printed on recycled paper.

# Contents

**Federal Register**

Vol. 86, No. 193

Friday, October 8, 2021

**Agriculture Department**
*See* Economic Research Service
*See* Food and Nutrition Service

**American Battle Monuments Commission**
NOTICES
Agency Information Collection Activities; Proposals, Submissions, and Approvals:
Generic Clearance for the Collection of Qualitative Feedback on Agency Service Delivery, 56243–56244

**Bureau of Consumer Financial Protection**
PROPOSED RULES
Small Business Lending Data Collection under the Equal Credit Opportunity Act, 56356–56606

**Census Bureau**
NOTICES
Meetings:
National Advisory Committee, 56245

**Centers for Disease Control and Prevention**
NOTICES
Meetings:
Infectious Substances and Vectors; Public Webinar, 56269

**Children and Families Administration**
NOTICES
Agency Information Collection Activities; Proposals, Submissions, and Approvals:
Placement and Transfer of Unaccompanied Children into ORR Care Provider Facilities, 56269–56272

**Civil Rights Commission**
NOTICES
Meetings:
Connecticut Advisory Committee, 56245
South Carolina Advisory Committee, 56244
South Dakota Advisory Committee; Cancellation, 56244–56245

**Coast Guard**
RULES
Safety Zone:
Lake Tahoe Dive Operations, Lake Tahoe, CA, 56206–56207
Monte Foundation Fireworks, Capitola Pier, Capitola, CA, 56205
Special Local Regulations:
Recurring Marine Events, Sector St. Petersburg, 56205

**Commerce Department**
*See* Census Bureau
*See* Foreign-Trade Zones Board
*See* Industry and Security Bureau
*See* International Trade Administration
*See* National Institute of Standards and Technology
*See* National Oceanic and Atmospheric Administration

**Committee for Purchase From People Who Are Blind or Severely Disabled**
NOTICES
Procurement List; Additions and Deletions, 56257–56258

**Defense Department**
*See* Engineers Corps

**Economic Research Service**
NOTICES
Agency Information Collection Activities; Proposals, Submissions, and Approvals, 56239–56240

**Education Department**
NOTICES
Agency Information Collection Activities; Proposals, Submissions, and Approvals:
Application for New Grants Under the Ronald E. McNair Postbaccalaureate Achievement Program, 56258

**Energy Department**
*See* Federal Energy Regulatory Commission
RULES
Energy Conservation Program:
Test Procedure for Clothes Dryers, 56608–56644
NOTICES
Application for Long-Term Authorization to Export Liquefied Natural Gas to Non-Free Trade Agreement Nations:
Freeport LNG Expansion, L.P.; FLNG Liquefaction, LLC; FLNG Liquefaction 2, LLC; and FLNG Liquefaction 3, LLC;, 56258–56260

**Engineers Corps**
RULES
Danger Zone:
Pacific Ocean at Marine Corps Base, Camp Blaz, Mason Live-Fire Training Range Complex, on the North Coast of Guam, 56208–56213
PROPOSED RULES
Restricted Area:
Elizabeth River, Naval Station Norfolk Deperming Station, Norfolk, VA, 56236–56238

**Environmental Protection Agency**
NOTICES
Draft Policy Assessment for the Particulate Matter National Ambient Air Quality Standards, 56263–56264
Environmental Impact Statements; Availability, etc., 56264–56265
Meetings:
Pesticide Program Dialogue Committee, 56265–56266

**Federal Aviation Administration**
PROPOSED RULES
Airspace Designations and Reporting Points:
United States Area Navigation Route (RNAV) T–227; Fairbanks, AK, 56234–56236
Airworthiness Directives:
Airbus Helicopters, 56220–56225
General Electric Company Turbofan Engines, 56217–56220
Pilatus Aircraft Ltd. Airplanes, 56227–56229
Stemme AG Gliders, 56225–56227
Umlaut Engineering GmbH (previously P3 Engineering GmbH) HAFEX (Halon-free) Hand-Held Fire Extinguishers, 56232–56234

Vulcanair S.p.A. Airplanes, 56229–56232

**Federal Communications Commission**
NOTICES
Meetings:
Communications Equity and Diversity Council, 56266
Privacy Act; Matching Program, 56266–56268

**Federal Council on the Arts and the Humanities**
NOTICES
Meetings:
Arts and Artifacts Indemnity Panel Advisory Committee, 56295

**Federal Emergency Management Agency**
NOTICES
Meetings:
National Advisory Council, 56284
Pandemic Response Voluntary Agreement Under Section 708 of the Defense Production Act, 56284–56286

**Federal Energy Regulatory Commission**
NOTICES
Combined Filings, 56262–56263
Effectiveness of Withdrawal of Exemption Amendment Application:
City of Nashua, New Hampshire, 56261–56262
Request Under Blanket Authorization and Establishing Intervention and Protest Deadline:
Columbia Gas Transmission, LLC, 56260–56261

**Federal Highway Administration**
NOTICES
Final Federal Agency Actions:
Proposed Transportation Project in Florida, 56347–56349

**Federal Maritime Commission**
NOTICES
Meetings; Sunshine Act, 56268

**Federal Reserve System**
NOTICES
Change in Bank Control:
Acquisitions of Shares of a Bank or Bank Holding Company, 56268–56269

**Food and Drug Administration**
RULES
General and Plastic Surgery Devices:
Reclassification of Certain Surgical Staplers, 56195–56204
Termination of Listing of Color Additives Exempt From Certification:
Lead Acetate, 56183–56195
NOTICES
Agency Information Collection Activities; Proposals, Submissions, and Approvals:
Medical Device Labeling Regulations, 56274–56276
Reporting Associated with Food Additive Petitions, Investigational Food Additive Files Exemptions, and Declaration of Color Additives on Animal Food Labels, 56277–56279
Guidance:
Surgical Staplers and Staples for Internal Use—Labeling Recommendations, 56272–56274

**Food and Nutrition Service**
NOTICES
Agency Information Collection Activities; Proposals, Submissions, and Approvals:
Food Program and Reporting System, 56240–56243

**Foreign-Trade Zones Board**
NOTICES
Approval of Expansion of Subzone:
Tesla, Inc., Lathrop, CA, Subzone 18G, 56245–56246
Reorganization and Expansion under Alternative Site Framework:
Foreign-Trade Zone 249, Pensacola, FL, 56246

**Geological Survey**
NOTICES
Agency Information Collection Activities; Proposals, Submissions, and Approvals:
National Land Remote Sensing Education, Outreach and Research Activity, 56286–56287

**Health and Human Services Department**
*See* Centers for Disease Control and Prevention
*See* Children and Families Administration
*See* Food and Drug Administration
*See* Health Resources and Services Administration
*See* National Institutes of Health

**Health Resources and Services Administration**
NOTICES
Agency Information Collection Activities; Proposals, Submissions, and Approvals:
The Maternal, Infant, and Early Childhood Home Visiting Program Quarterly Performance Report, 56279–56280

**Homeland Security Department**
*See* Coast Guard
*See* Federal Emergency Management Agency

**Industry and Security Bureau**
NOTICES
Meetings:
Emerging Technology Technical Advisory Committee, 56246–56247
Sensors and Instrumentation Technical Advisory Committee, 56246

**Interior Department**
*See* Geological Survey
*See* Land Management Bureau
*See* Office of Natural Resources Revenue

**International Trade Administration**
NOTICES
Antidumping or Countervailing Duty Investigations, Orders, or Reviews:
Certain Activated Carbon from the People's Republic of China, 56248–56249
Stainless Steel Wire Rod from Japan, the Republic of Korea, and Taiwan, 56249–56250
Steel Concrete Reinforcing Bar from the Republic of Turkey, 56247–56248
Wooden Cabinets and Vanities and Components Thereof from the People's Republic of China, 56251–56252
Subsidy Programs Provided by Countries Exporting Softwood Lumber and Softwood Lumber Products to the United States, 56250–56251

**International Trade Commission**
NOTICES
Complaint:
Certain Oil-Vaping Cartridges, Components Thereof, and Products Containing the Same, 56291–56292
Investigations; Determinations, Modifications, and Rulings, etc.:
Certain Balanced Armature Devices, Products Containing Same, and Components Thereof, 56290–56291

**Justice Department**
NOTICES
Proposed Consent Decree:
Oil Pollution Act, 56292–56293

**Labor Department**
NOTICES
Efforts by Certain Foreign Countries to Eliminate the Worst Forms of Child Labor; Child Labor, Forced Labor, and Forced or Indentured Child Labor in the Production of Goods in Foreign Countries; and Business Practices to Reduce the Likelihood of Forced Labor or Child Labor in the Production of Goods, 56293–56295

**Land Management Bureau**
NOTICES
Application for Withdrawal Extension and Opportunity for Public Meeting:
Alaska, 56287
Meetings:
Bill Williams River National Wildlife Refuge, Arizona; Proposed Withdrawal, 56287–56288

**Maritime Administration**
NOTICES
Deepwater Port License Application:
SPOT Terminal Services, LLC—Draft General Conformity Determination, 56349–56350

**National Foundation on the Arts and the Humanities**
*See* Federal Council on the Arts and the Humanities

**National Highway Traffic Safety Administration**
NOTICES
Denial of Petition for Decision of Inconsequential Noncompliance:
Forest River, Inc., 56351–56353

**National Institute of Standards and Technology**
RULES
Hollings Manufacturing Extension Partnership—Amendment to Venue for Publishing Notices of Funding Opportunities for Financial Assistance, 56183
NOTICES
National Cybersecurity Center of Excellence Data Classification Practices: Facilitating Data-Centric Security Management, 56252–56254

**National Institutes of Health**
NOTICES
Meetings:
Center for Scientific Review, 56280–56282
National Cancer Institute, 56282–56283
National Center for Complementary and Integrative Health, 56283–56284
National Institute of Allergy and Infectious Diseases, 56283

**National Oceanic and Atmospheric Administration**
NOTICES
Agency Information Collection Activities; Proposals, Submissions, and Approvals:
Coastal Ocean Program Grants Proposal Application Package: Correction, 56256–56257
Meetings:
New England Fishery Management Council, 56256
Permit Application:
Fisheries of the Caribbean, Gulf of Mexico, and South Atlantic; Exempted Fishing, 56254–56256

**Neighborhood Reinvestment Corporation**
NOTICES
Meetings; Sunshine Act, 56295

**Nuclear Regulatory Commission**
NOTICES
Agency Information Collection Activities; Proposals, Submissions, and Approvals:
Request for Taxpayer Identification Number, 56298–56299
Requirements for Renewal of Operating Licenses for Nuclear Power Plants, 56295–56296
Establishment of Atomic Safety and Licensing Board:
Duke Energy Carolinas, LLC, 56299
Meetings:
Advisory Committee on Reactor Safeguards, 56297–56298
Meetings; Sunshine Act, 56299

**Office of Natural Resources Revenue**
NOTICES
Agency Information Collection Activities; Proposals, Submissions, and Approvals:
Delegated and Cooperative Activities with States and Indian Tribes, 56288–56290

**Postal Regulatory Commission**
NOTICES
New Postal Product, 56300

**Presidential Documents**
PROCLAMATIONS
Special Observances:
German-American Day (Proc. 10278), 56181–56182

**Science and Technology Policy Office**
NOTICES
Request for Information:
Public and Private Sector Uses of Biometric Technologies, 56300–56302

**Securities and Exchange Commission**
NOTICES
Meetings; Sunshine Act, 56331
Self-Regulatory Organizations; Proposed Rule Changes:
BOX Exchange, LLC, 56318–56321
Cboe BZX Exchange, Inc., 56335–56338
Cboe EDGX Exchange, Inc., 56325–56328
Cboe Exchange, Inc., 56332–56335
Miami International Securities Exchange, LLC, 56308–56311
MIAX PEARL, LLC, 56321–56325
Nasdaq BX, Inc., 56315–56318
Nasdaq ISE, LLC, 56312–56315
The Nasdaq Stock Market, LLC, 56302–56308, 56328–56331, 56338–56344

**Small Business Administration**
**NOTICES**
Major Disaster Declaration:
Michigan, 56344

**State Department**
**NOTICES**
Culturally Significant Objects Imported for Conservation, Scientific Research, and Display:
Nine Medieval Devotional Objects, 56344
Culturally Significant Objects Imported for Exhibition:
Hall of Ancient Egypt, 56344
Through Vincent's Eyes: Van Gogh and His Sources, 56345

**Surface Transportation Board**
**NOTICES**
Exemption:
Acquisition and Operation; The Central Railroad Co. of Indiana; Patton-Lowe RR, Inc., 56345

**Trade Representative, Office of United States**
**NOTICES**
Possible Reinstatement of Certain Exclusions in the Section 301 Investigation of China's Acts, Policies, and Practices Related to Technology Transfer, Intellectual Property, and Innovation, 56345–56347

**Transportation Department**
*See* Federal Aviation Administration
*See* Federal Highway Administration
*See* Maritime Administration
*See* National Highway Traffic Safety Administration

**Treasury Department**
**NOTICES**
List of Countries Requiring Cooperation with an International Boycott, 56353–56354

**United States African Development Foundation**
**NOTICES**
Meetings:
Board of Directors, 56239

**Veterans Affairs Department**
**RULES**
Assistance to Eligible Individuals in Acquiring Specially Adapted Housing, 56213–56216
**NOTICES**
Meetings:
Advisory Committee on the Readjustment of Veterans, 56354

---

**Separate Parts In This Issue**

**Part II**
Bureau of Consumer Financial Protection, 56356–56606

**Part III**
Energy Department, 56608–56644

---

**Reader Aids**

Consult the Reader Aids section at the end of this issue for phone numbers, online resources, finding aids, and notice of recently enacted public laws.

To subscribe to the Federal Register Table of Contents electronic mailing list, go to https://public.govdelivery.com/accounts/USGPOOFR/subscriber/new, enter your e-mail address, then follow the instructions to join, leave, or manage your subscription.

## CFR PARTS AFFECTED IN THIS ISSUE

A cumulative list of the parts affected this month can be found in the Reader Aids section at the end of this issue.


**3 CFR**

**Proclamations:**

10278 ..... 56181

**10 CFR**

429 ..... 56608

430 ..... 56608

**12 CFR**

**Proposed Rules:**

1002 ..... 56356

**14 CFR**

**Proposed Rules:**

39 (6 documents) ..... 56217, 56220, 56225, 56227, 56229, 56232

71 ..... 56234

**15 CFR**

290 ..... 56183

**21 CFR**

73 ..... 56183

878 ..... 56195

**33 CFR**

100 ..... 56205

165 (2 documents) ..... 56205, 56206

334 ..... 56208

**Proposed Rules:**

334 ..... 56236

**38 CFR**

3 ..... 56213

36 ..... 56213

Federal Register
Vol. 86, No. 193
Friday, October 8, 2021

# Presidential Documents

**Title 3—**

## The President

**Proclamation 10278 of October 5, 2021**

## German-American Day, 2021

**By the President of the United States of America**

**A Proclamation**

Since the first Germans arrived on American soil in the 17th century in search of religious freedom and opportunity, German-Americans have played an essential role in the foundation and growth of our country. Today, German-Americans make up one of the largest ancestry groups in our country, with more than 43 million Americans of German heritage living in the United States. Their influence has been felt in each successive generation, and their contributions to the United States have been innumerable. On German-American Day, we celebrate the German-Americans who continue to enhance our Nation with their talents, skills, knowledge, and rich cultural heritage.

The contributions of German-Americans are woven into the fabric of America, touching our lives every day. From the Brooklyn Bridge to airplanes, jeans to pianos, the food we eat to the beer we drink—German-Americans have invented, built, and influenced some of the most iconic American products and institutions. Generations of German-Americans have served our Nation as first responders, public servants, scientists, entrepreneurs, farmers and ranchers, authors, and athletes among many other occupations.

The strong ties between the people of America and Germany that have arisen since the end of World War II reflect the common bonds our countries enjoy. We remain committed to the shared democratic values and institutions that have shaped our nations and our economies. Earlier this year, the United States and Germany signed the Washington Declaration, reaffirming the democratic principles that underpin our steadfast commitment to bilateral cooperation in promoting peace, security, and prosperity around the world. The United States and Germany are inseparable allies.

On German-American Day, we celebrate our Nation's German-American heritage and recognize the contributions both past and present of German-Americans across our country.

NOW, THEREFORE, I, JOSEPH R. BIDEN JR., President of the United States of America, do hereby proclaim October 6, 2021, as German-American Day. I urge all Americans to celebrate the rich and varied history of German-Americans and remember the many contributions they have made to our Nation.

IN WITNESS WHEREOF, I have hereunto set my hand this fifth day of October, in the year of our Lord two thousand twenty-one, and of the Independence of the United States of America the two hundred and forty-sixth.

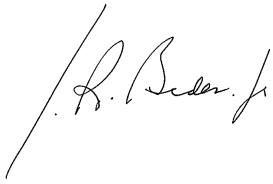

[FR Doc. 2021–22134
Filed 10–7–21; 8:45 am]
Billing code 3395–F2–P

# Rules and Regulations

Federal Register
Vol. 86, No. 193
Friday, October 8, 2021

This section of the FEDERAL REGISTER contains regulatory documents having general applicability and legal effect, most of which are keyed to and codified in the Code of Federal Regulations, which is published under 50 titles pursuant to 44 U.S.C. 1510.

The Code of Federal Regulations is sold by the Superintendent of Documents.

## DEPARTMENT OF COMMERCE

### National Institutes of Standards and Technology

### 15 CFR Part 290

**[Docket No.: 210913–0184]**

**RIN 0693–AB68**

## Hollings Manufacturing Extension Partnership—Amendment to Venue for Publishing Notices of Funding Opportunities for Financial Assistance

**AGENCY:** National Institute of Standards and Technology (NIST), United States Department of Commerce.

**ACTION:** Final rule.

**SUMMARY:** NIST is issuing a final rule to amend the regulations governing the Hollings Manufacturing Extension Partnership (MEP) program to reflect the current requirements for publishing Notices of Funding Opportunities (NOFOs) for the establishment and operation of MEP Centers, consistent with the current MEP authorizing statute and Department of Commerce (Department or DOC) policy.

**DATES:** This rule is effective October 8, 2021.

**FOR FURTHER INFORMATION CONTACT:** J. Chancy Lyford, External Affairs, Performance and Support Division, Hollings Manufacturing Extension Partnership, National Institute of Standards and Technology, 100 Bureau Drive, Mail Stop 4800, Gaithersburg, MD 20899, 240–660–0324.

**SUPPLEMENTARY INFORMATION:**

### I. Background

The Hollings MEP Program (Program) is a unique program, consisting of centers in each state and Puerto Rico with partnerships at the state, federal, and local levels. Prior to being amended by Section 501(b) of the American Innovation and Competitiveness Act (AICA), Public Law 114–329, the Program statute, 15 U.S.C. 278k(c), required that NIST publish in the **Federal Register** a description of each financial assistance program to establish an MEP Center. Section 501(b) of AICA removed the requirement that such notices be published in the **Federal Register**, which is consistent with the current policy of the Department of Commerce to publish all notices of funding opportunities (NOFOs) on *www.Grants.gov,* unless otherwise required by statute or regulation.[1]

NIST is amending the MEP regulations, specifically 15 CFR 290.7, to remove the requirement that NOFOs to solicit applications to establish a new MEP Center or to operate a pre-existing MEP Center be published in the **Federal Register**.

### II. Statutory Authority

15 U.S.C. 278k was revised by section 501(b) of AICA to eliminate the requirement that solicitations for operators of MEP Centers be published in the **Federal Register**.

### III. Regulatory Analysis

Because this final rule is a matter relating to public property, loans, grants, benefits, or contracts, 5 U.S.C. 553 does not apply. *See* 5 U.S.C. 553(a)(2). Therefore, prior notice and opportunity for public comment are not required under 5 U.S.C. 553, and there is no requirement for a 30-day delay in the effectiveness of this action under 5 U.S.C. 553(d).

### Executive Order 12866

This final rule was determined to be not significant for purposes of Executive Order 12866.

### Executive Order 13132

This final rule does not contain policies with Federalism implications as defined in Executive Order 13132.

### Regulatory Flexibility Act

Because prior notice and opportunity for public comment are not required for this rule by 5 U.S.C. 553, or any other law, the analytical requirements of the Regulatory Flexibility Act, 5 U.S.C. 601 *et seq.,* do not apply.

[1] In addition, the Office of Management and Budget has encouraged Federal agencies to use *www.Grants.gov* since 2003. 68 FR 58146.

### Paperwork Reduction Act

This rule contains no new collection of information subject to the Paperwork Reduction Act, 44 U.S.C. 3501 *et seq.*

### National Environmental Policy Act

This final rule will not significantly affect the quality of the human environment. Therefore, an environmental assessment or Environmental Impact Statement is not required to be prepared under the National Environmental Policy Act of 1969.

### List of Subjects in 15 CFR Part 290

Cooperative agreements, Grant programs, Science and technology.

For the reasons stated in the preamble, NIST is amending 15 CFR part 290 as follows:

## PART 290—REGIONAL CENTERS FOR THE TRANSFER OF MANUFACTURING TECHNOLOGY

■ 1. The authority citation for 15 CFR part 290 continues to read as follows:

**Authority:** 15 U.S.C. 278k.

■ 2. Revise § 290.7 to read as follows:

**§ 290.7 Proposal selection process.**

Upon the availability of funding to solicit applications to establish a new Manufacturing Extension Partnership (MEP) Center or to operate a pre-existing MEP Center, the Director shall publish a notice of funding opportunity on *www.Grants.gov* requesting submission of competitive proposals from eligible organizations.

**Alicia Chambers,**
*NIST Executive Secretariat.*

[FR Doc. 2021–21976 Filed 10–7–21; 8:45 am]
BILLING CODE 3510–13–P

## DEPARTMENT OF HEALTH AND HUMAN SERVICES

### Food and Drug Administration

### 21 CFR Part 73

**[Docket No. FDA–2017–C–1951]**

## Termination of Listing of Color Additives Exempt From Certification; Lead Acetate

**AGENCY:** Food and Drug Administration, HHS.

**ACTION:** Final rule; response to objections and denial of public hearing requests; removal of administrative stay.

**SUMMARY:** The Food and Drug Administration (FDA or we) is responding to objections and a public hearing request that we received from Combe Inc., on the final rule entitled ''Termination of Listing of Color Additives Exempt From Certification; Lead Acetate,'' which published on October 31, 2018. The final rule amended the color additive regulations to no longer provide for the safe use of lead acetate in cosmetics intended for coloring hair on the scalp. After reviewing the objections, we have concluded that the objections do not raise issues of material fact that justify a hearing. Therefore, the stay of the effectiveness for the repeal and delisting of the color additive regulation is now lifted, and we are amending the color additive regulations to no longer provide for the safe use of lead acetate in cosmetics intended for coloring hair on the scalp.

**DATES:** This rule is effective January 6, 2022.

**ADDRESSES:** For access to the docket to read background documents or comments received, go to *https://www.regulations.gov* and insert the docket number, found in brackets in the heading of this document, into the ''Search'' box and follow the prompts and/or go to the Dockets Management Staff, 5630 Fishers Lane, Rm. 1061, Rockville, MD 20852, 240–402–7500.

**FOR FURTHER INFORMATION CONTACT:** Shayla West-Barnette, Center for Food Safety and Applied Nutrition, Food and Drug Administration, 5001 Campus Dr., College Park, MD 20740–3835, 240–402–1262.

**SUPPLEMENTARY INFORMATION:**

## I. Background

In the **Federal Register** of October 31, 2018 (83 FR 54665), we issued a final rule repealing the color additive regulation in § 73.2396 (21 CFR 73.2396) to no longer provide for the safe use of lead acetate in cosmetics intended for coloring hair on the scalp because new data available since lead acetate was permanently listed have demonstrated that there is no longer a reasonable certainty that no harm will result from the use of this color additive. We gave interested persons until November 30, 2018, to file objections and requests for a hearing on the final rule. The preamble to the final rule stated that the effective date of the final rule would be on December 3, 2018, except as to any provisions that may be stayed by the filing of proper objections (83 FR 54665 at 54673). On December 3, 2018, § 73.2396 was removed from the CFR. However, we had received objections and requests for a hearing on the objections from Combe Inc. (Combe), a manufacturer of hair dyes containing lead acetate. Under sections 701(e)(2) and 721(d) of the FD&C Act (21 U.S.C. 371(e)(2) and 379e(d)), the filing of objections operates to stay the effectiveness of our repeal until we take final action on the objections.

To implement a stay of effectiveness as required by sections 701(e)(2) and 721(d) of the FD&C Act, we published a final rule in the **Federal Register** of April 1, 2019 (84 FR 12081), reinstating § 73.2396 pending final FDA action on the objections to the October 31, 2018, final rule. We also stated that this action did not reflect any change in our determination that new data demonstrate that there is no longer a reasonable certainty of no harm from the use of this color additive.

FDA listed lead acetate in § 73.2396 in 1980 as a color additive for safe use in cosmetics intended for coloring hair on the scalp, subject to certain restrictions and labeling requirements, at levels up to 0.6 percent (weight to volume; equivalent to 6,000 parts per million (ppm)) lead in the cosmetic product (45 FR 72112). Lead acetate is used in progressive hair dyes that, when applied to gray hair, gradually change the color with repeated applications.[1]

## II. Objections and Requests for a Hearing

Sections 701(e)(2) and 721(d) of the Federal Food, Drug, and Cosmetic Act (FD&C Act) collectively provide that, within 30 days after publication of an order relating to a color additive regulation, any person adversely affected by such an order may file objections, specifying with particularity the provisions of the order deemed objectionable, stating the grounds therefor, and requesting a public hearing upon such objections. We may deny a hearing request if the objections to the regulation do not raise genuine and substantial issues of fact that can be resolved at a hearing (§ 12.24(b)(1) (21 CFR 12.24(b)(1)). (See also *Community Nutrition Institute* v. *Young,* 773 F.2d 1356, 1364 (D.C. Cir. 1985).)

Objections and requests for a hearing are governed by 21 CFR part 12 of our regulations. Under 21 CFR 12.22(a), each objection must meet the following conditions: (1) Must be submitted on or before the 30th day after the date of publication of the final rule; (2) must be separately numbered; (3) must specify with particularity the provision of the regulation or proposed order objected to; (4) must specifically state the provision of the regulation or proposed order on which a hearing is requested (failure to request a hearing on an objection constitutes a waiver of the right to a hearing on that objection); and (5) must include a detailed description and analysis of the factual information to be presented in support of the objection if a hearing is requested (failure to include a description and analysis for an objection constitutes a waiver of the right to a hearing on that objection).

Following publication of the final rule repealing the regulation in § 73.2396 to no longer provide for the safe use of lead acetate in cosmetics intended for coloring hair on the scalp, we received a submission from Combe, a manufacturer of hair dyes containing lead acetate, providing 19 objections and requesting a hearing on each of the objections. Combe provided the following numbered objections:

*Objection 1:* Combe objects to FDA's finding that there is no safe level of exposure for lead.

*Objection 2:* Combe objects to FDA's reliance on information about lead exposure in children (*e.g.,* recommendations from the Centers for Disease Control and Prevention (CDC)).

*Objection 3:* Combe objects to FDA's reliance on sources that discuss blood level of lead, not exposure levels (see, *e.g.,* National Toxicology Program (NTP) monograph).

*Objection 4:* Combe objects to the conclusions FDA draws from the Joint Food and Agriculture Organization/World Health Organization (FAO/WHO) Expert Committee on Food Additives (JECFA) (2011).

*Objection 5:* Combe objects to FDA's reliance on the Environmental Protection Agency's (EPA's) goals for lead in drinking water.

*Objection 6:* Combe objects to FDA's conclusion that the 1980 Moore et al. study (Ref. 1, the Moore study) underestimated the exposure of lead.

*Objection 7:* Combe objects to FDA's criticisms of Moore.

*Objection 8:* Combe objects to FDA's finding that the lead in the Moore study could have been absorbed by other parts of the body than the blood.

*Objection 9:* Combe objects to FDA's reliance on a novel and unvalidated computer model.

*Objection 10:* Combe objects to FDA's treating an unvalidated computer model as more reliable than robust human data.

[1] For example, as indicated in a lead acetate-containing progressive hair dye product manufacturer's use direction (Ref. 10), after the initial application, users might apply the progressive hair dye daily until the desired color shade is achieved, and once or twice per week to maintain the hair color thereafter.

*Objection 11:* Combe objects to FDA's argument that the absorption percentage from the Moore study is invalid because it tested only a small patch of skin.

*Objection 12:* Combe objects to FDA's reliance on a ''permeability coefficient'' for lead instead of fractional absorption.

*Objection 13:* Combe objects to FDA's use of a permeability coefficient for lead acetate that EPA repudiated and replaced with a much lower estimate.

*Objection 14:* Combe objects to FDA's conclusion that lower median lead levels in blood since 1990 means that any lead contributed by lead acetate is less safe now.

*Objection 15:* Combe objects to FDA's entire analysis because it is missing two critical links—FDA never relates exposure from lead acetate to any change in blood levels, and thus it never relates it to any predicted harm.

*Objection 16:* Combe objects to FDA's whole argument as FDA never links exposure to lead from lead acetate to a change in steady-state blood levels.

*Objection 17:* Combe objects to FDA's conclusion about the effect of lead acetate on blood lead levels.

*Objection 18:* Combe objects to FDA taking a zero-tolerance approach for lead.

*Objection 19:* Combe objects to FDA's failure to consider reducing the permitted lead acetate level under § 73.2396 from 0.6 percent to 0.153 percent.

See Submission from Anthony M. Santini, Senior Vice President and General Counsel, Combe Inc., Peter Barton Hutt, Matthew J. Hegreness, and Richard F. Kingham, Covington & Burling LLP (Counsel for Combe Incorporated), to the Dockets Management Staff, FDA, dated November 30, 2018, at pages 25–58, available at: *https://www.regulations.gov/document/FDA-2017-C-1951-0233* (referred to as the Submission).

## III. Standards for Granting a Hearing

Specific criteria for deciding whether to grant or deny a request for a hearing are set out in § 12.24(b). Under that regulation, a hearing will be granted if the material submitted by the requester shows, among other things, that: (1) There is a genuine and substantial factual issue for resolution at a hearing (a hearing will not be granted on issues of policy or law); (2) the factual issue can be resolved by available and specifically identified reliable evidence (a hearing will not be granted on the basis of mere allegations or denials or general descriptions of positions and contentions); (3) the data and information submitted, if established at a hearing, would be adequate to justify resolution of the factual issue in the way sought by the requester (a hearing will be denied if the data and information submitted are insufficient to justify the factual determination urged, even if accurate); (4) resolution of the factual issue in the way sought by the person is adequate to justify the action requested (a hearing will not be granted on factual issues that are not determinative with respect to the action requested, *e.g.,* if the action would be the same even if the factual issue were resolved in the way sought); (5) the action requested is not inconsistent with any provision in the FD&C Act or any regulation particularizing statutory standards (the proper procedure in those circumstances is for the person requesting the hearing to petition for an amendment or waiver of the regulation involved); and (6) the requirements in other applicable regulations, *e.g.,* 21 CFR 10.20, 12.21, 12.22, 314.200, 514.200, and 601.7(a), and in the notice issuing the final regulation or the notice of opportunity for a hearing are met.

A party seeking a hearing must meet a ''threshold burden of tendering evidence suggesting the need for a hearing'' (*Costle* v. *Pacific Legal Foundation,* 445 U.S. 198, 214–215 (1980), citing *Weinberger* v. *Hynson, Westcott & Dunning, Inc,* 412 U.S. 609, 620–621 (1973)). An allegation that a hearing is necessary to ''sharpen the issues'' or to ''fully develop the facts'' does not meet this test (*Georgia Pacific Corp.* v. *EPA,* 671 F.2d 1235, 1241 (9th Cir. 1982)). If a hearing request fails to identify any factual evidence that would be the subject of a hearing, there is no point in holding one. In judicial proceedings, a court is authorized to issue summary judgment without an evidentiary hearing whenever it finds that there are no genuine issues of material fact in dispute, and a party is entitled to judgement as a matter of law (*see Rule 56, Federal Rules of Civil Procedure*). The same principle applies to administrative proceedings (see 21 CFR 12.28).

A hearing request must not only contain evidence, but that evidence should raise a material issue of fact ''concerning which a meaningful hearing might be held'' (*Pineapple Growers Ass'n* v. *FDA,* 673 F.2d 1083, 1085 (9th Cir. 1982)). Where the issues raised in the objection are, even if true, legally insufficient to alter the decision, an Agency need not grant a hearing (see *Dyestuffs and Chemicals, Inc.* v. *Flemming,* 271 F.2d 281, 286 (8th Cir. 1959)). A hearing is justified only if the objections are made in good faith and if they ''draw in question in a material way the underpinnings of the regulation at issue'' (*Pactra Industries* v. *CPSC,* 555 F.2d 677, 684 (9th Cir. 1977)). A hearing need not be held to resolve questions of law and policy (see *Citizens for Allegan County, Inc.* v. *FPC,* 414 F.2d 1125, 1128 (D.C. Cir. 1969); *Sun Oil Co.* v. *FPC,* 256 F.2d 233, 240 (5th Cir. 1958)).

Even if the objections raise material issues of fact, we need not grant a hearing if those same issues were adequately raised and considered in an earlier proceeding. Once an issue has been so raised and considered, a party is estopped from raising that same issue in a later proceeding without new evidence. The various judicial doctrines dealing with finality, such as collateral estoppel, can be validly applied to the administrative process (see *Pacific Seafarers, Inc.* v. *Pac. Far East Line, Inc.,* 404 F.2d 804, 809 (D.C. Cir. 1968), *cert. denied,* 393 U.S. 1093 (1969)). In explaining why these principles ought to apply to an Agency proceeding, the U.S. Court of Appeals for the District of Columbia Circuit wrote: ''The underlying concept is as simple as this: justice requires that a party have a fair chance to present his position. But overall interests of administration do not require or generally contemplate that he will be given more than a fair opportunity'' (*Retail Clerks Union, Local 1401* v. *NLRB,* 463 F.2d 316, 322 (D.C. Cir. 1972); see also *Costle* v. *Pacific Legal Foundation,* 445 U.S. 198 at 215–17).

## IV. Analysis of Objections and Response to Hearing Requests

The submission from Combe contains 19 numbered objections, and Combe requests a hearing on each of them. We address each objection below, as well as the evidence and information filed in support of each, comparing each objection and the information submitted in support of it to the standards for granting a hearing in § 12.24(b). For purposes of clarity, we have grouped the numbered objections into categories of related subjects while maintaining the objection numbers assigned by Combe.

### *A. Category A: No Known Safe Level of Lead Exposure*

Combe's numbered objections included in Category A are as follows:

1. Combe objects to FDA's finding that there is no safe level of exposure for lead.
2. Combe objects to FDA's reliance on information about lead exposure in children (*e.g.,* recommendations from the CDC).
4. Combe objects to the conclusions FDA draws from JECFA (2011).
5. Combe objects to FDA's reliance on EPA's goals for lead in drinking water.
18. Combe objects to FDA taking a zero-tolerance approach to lead.

*Objection 1.* Combe objects to ''FDA's finding that there is no safe level of exposure for lead.'' The objection asserts that, ''. . . the weight of the scientific evidence demonstrates that low levels of

lead are safe, especially for the population that uses hair dye containing lead acetate—older men with graying hair.'' See Submission, page 26.

(Response to Objection 1) Our determination that a color additive is safe means that there is convincing evidence that establishes with reasonable certainty that no harm will result from the intended use of the color additive (§ 70.3(i)). The regulation in § 73.2396 permits the use of lead acetate (calculated as lead) at levels not to exceed 0.6 percent (6,000 parts per million (ppm; milligrams/kilograms (mg/kg))) as a color additive in cosmetics intended for coloring hair on the scalp. Combe did not provide scientific data to support its objection or to demonstrate that there is a level of exposure to lead that could be considered safe.

Following our full evaluation of data submitted in color additive petition (CAP) 7C0309 requesting repeal of § 73.2396 and other pertinent data and information (see September 18, 2018, memorandum from M.K. Wyatt to M. Harry, ''the Wyatt Memorandum'' (Ref. 2)), we have determined that there is no known level of exposure to lead that does not produce adverse effects. While Combe states that ''. . . lead does not pose a danger to adults at low levels . . .,'' Combe failed to provide in this objection the specific levels at which lead does not pose a danger to adults and any corresponding scientific evidence to support this statement. See Submission, page 27.

The objection failed to include new data or information that would refute our findings about the lack of a safe level of lead exposure. The objection merely alleges that low levels of lead are safe, without providing any scientific basis. A hearing will not be granted on the basis of mere allegations or general descriptions of positions and contentions (§ 12.24(b)(2)). The objector must, at a minimum, raise a genuine and substantial issue of fact for resolution at a hearing. Therefore, we are denying the request for a hearing on this objection.

*Objection 2.* Combe objects to ''FDA's reliance on information about lead exposure in children (*e.g.,* recommendations from the CDC).'' In this objection, ''Combe does not dispute the fact that lead exposure can harm a developing child,'' but states that this fact has ''no bearing on the use of lead acetate in a progressive hair dye for older men.'' See Submission, page 27. Combe also asserts that ''lead poses no danger at low levels to older adults.'' See Submission, page 28.

(Response to Objection 2) We acknowledge that Combe's products (*i.e.,* lead acetate-containing progressive hair dyes) are intended for use by adults and not by children. Our decision to repeal the regulation is based on the evidence of lead-related adverse health effects reported at low levels of lead in adults, such as adverse cardiovascular and kidney effects, cognitive dysfunction, and adverse reproductive outcomes (Ref. 3), and the lack of evidence of a safe level of exposure for lead. Currently, available data and information do not support the safe use of lead acetate intentionally added to cosmetics for coloring hair on the scalp of any age group or gender. Therefore, the use of lead acetate as a color additive no longer meets the safety standard of ''reasonable certainty of no harm.''

We also note that we did not rely on the toxicity information about lead exposure in children; rather, in the final rule, we referred to the CDC statement that there is no safe blood lead level in children to further demonstrate the risks of lead exposure and why there is a U.S. Government-wide effort to limit lead exposure to the public. We continue to work to limit consumers' exposure to lead in all FDA-regulated products, including cosmetics.

Combe failed to provide scientific data and information demonstrating that there is a safe level of lead exposure from the listed use of lead acetate as a color additive. A hearing will not be granted on the basis of mere allegations or general descriptions of positions and contentions (§ 12.24(b)(2)). The objector must, at a minimum, raise a genuine and substantial issue of fact for resolution at a hearing. Therefore, we are denying the request for a hearing on this objection.

*Objection 4.* Combe objects to ''the conclusions FDA draws from JECFA (2011).'' See Submission, page 32. In this objection, Combe cites JECFA's conclusion that ''it could not establish a new provisional tolerable weekly intake (PTWI) that would be considered health protective,'' and that JECFA instead established a ''negligible risk'' level for food. See Submission, at page 32. Combe alleges that ''FDA did not analyze the underlying scientific discussion in JECFA (2011).'' See Submission, page 32.

(Response to Objection 4) JECFA stated that ''because the dose-response analyses do not provide any indication of a threshold for the key effects of lead, the Committee therefore concluded that ''it was not possible to establish a new PTWI that would be considered to be health protective'' (Ref. 4). Notably, JECFA's statement about ''negligible risk'' was within the context of unavoidable lead exposure as an impurity in food, instead of intentionally added, avoidable exposures to lead in a cosmetic product. We are not aware of any statement by a competent, national regulatory authority or an international risk assessment body establishing a safe level of lead exposure that would support a determination that there is a reasonable certainty of no harm from the use of lead acetate as a color additive in hair dye. Instead, for example, the WHO has stated that ''[t]here is no level of exposure to lead that is known to be without harmful effects.'' (Ref. 5).

Contrary to Combe's assertion, JECFA's statement establishing a negligible risk level for lead as an unavoidable food impurity does not provide a ''safe harbor'' for any intentionally added lead in a cosmetic product. See Submission, page 33. Also, JECFA's negligible risk level for food does not support Combe's claim that the intended use of lead acetate in hair dye meets the safety standard of ''reasonable certainty of no harm'' set forth at § 70.3(i) (21 CFR 70.3(i)) because as JEFCA states, currently available data do not provide any indication of a threshold for the reported adverse effects from exposure to lead (Ref. 4).

The objection failed to include any new information or data that would change our findings about the lack of a safe exposure level of lead. The objection merely alleges that FDA did not analyze JECFA's conclusion and does not provide scientific information to support Combe's argument. A hearing will not be granted on the basis of mere allegations or general descriptions of positions and contentions (§ 12.24(b)(2)). The objector must, at a minimum, raise a genuine and substantial issue of fact for resolution at a hearing. Therefore, we are denying the request for a hearing on this objection.

*Objection 5.* Combe objects to ''FDA's reliance on EPA's goals for lead in drinking water.'' Combe states that the EPA goal in setting the maximum contaminant level for lead in drinking water at zero is based on the effect of lead in children. See Submission, page 33. Combe contends that EPA's goal for lead in drinking water ''in no way means, however, that lead is unsafe in a progressive hair dye for aging men with graying hair.'' Ibid.

(Response to Objection 5) FDA did not rely on EPA's goal for lead in drinking water; we referred to it to further document the adverse effects resulting from lead exposure. Adverse effects to the public more generally

resulting from lead exposure are the reason why there is a government-wide effort to limit lead exposure to the public. Our decision to repeal the regulation was based on the recognition that there is no scientific data demonstrating a safe level of exposure to lead and that the data currently available no longer demonstrate that there is reasonable certainty of no harm from the use of lead acetate as a color additive in hair dyes authorized under § 73.2396. Combe fails to show that there is a genuine and substantial issue of fact for resolution at a hearing. A hearing will not be granted on the basis of mere allegations or general descriptions of positions and contentions (§ 12.24(b)(2)). Therefore, we are denying the request for a hearing on this objection.

*Objection 18.* Combe objects to ''FDA taking a zero-tolerance approach to lead.'' Combe argues that ''FDA appears to draw a legal distinction between lead that is intentionally added and lead that is present as impurities. Although such a distinction can be legally drawn for food, FDA cannot do this for cosmetics.'' See Submission, page 54. Combe claims that the safety standard for cosmetics is the same, whether the lead is intentionally added or present as an impurity. Combe asserts that under section 406 of the FD&C Act (21 U.S.C. 346), FDA can only set tolerances for poisonous and deleterious substances for food, and not cosmetics. Combe further asserts that FDA is acting arbitrarily and capriciously by banning lead acetate in hair dyes, but not banning it in lipstick. See Submission, pages 55–56.

(Response to Objection 18) We disagree that the presence of lead as an impurity in some cosmetic products means that FDA must find that there is a reasonable certainty of no harm from the use of lead acetate in hair dyes at levels up to 6,000 ppm (mg/kg). The intended use of lead acetate is as a color additive and as such we are acting under sections 721(d) and 601(e) (21 U.S.C. 361(e)) of the FD&C Act. See 28 FR 13374 (December 10, 1963) (providing FDA's interpretation of sections 601(a) and (e) of the FD&C Act). We have concluded that intended use of lead acetate does not meet the safety standard of ''reasonable certainty of no harm'' set forth at § 70.3(i) for color additives. Combe has not demonstrated that the intended use of lead acetate meets this safety standard. Therefore, we are repealing the listing of lead acetate under section 721(d) of the FD&C Act, and its use adulterates a cosmetic under section 601(e) of the FD&C Act.

Our repeal of the listing of lead acetate as a color additive in hair dye and our recommendation to limit lead as an unavoidable impurity in lipstick and other cosmetics are not arbitrary and capricious actions, as Combe asserts. In our ''Draft Guidance for Industry: Lead in Cosmetic Lip Products and Externally Applied Cosmetics: Recommended Maximum Level'' (2016), we recommend lead not be present as an impurity (not an intentionally added ingredient) in cosmetics at levels exceeding 10 ppm (10 mg/kg) (Ref. 6).[2] Lead as an impurity may occur in any cosmetics due to its background presence in the environment. Lead as an impurity cannot be completely avoided, although we have concluded that limiting trace amounts of lead to less than 10 ppm (10 mg/kg) can be achieved through reasonable and practical approaches to control raw materials and through other good manufacturing practices (Ref. 7). The draft guidance does not apply to hair dyes that contain lead acetate as an ingredient (Ref. 6 at page 3).

By contrast, lead acetate as a color additive is an intentionally added ingredient in hair dye and must meet the safety standard for color additives. We believe that the available data demonstrate that exposure to lead acetate from the intended use may cause adverse effects (Refs. 3 and 4). Therefore, the use of lead acetate in hair dye products that would result in lead levels up to 6,000 ppm (6,000 mg/kg) in the final products does not meet the safety standard for color additives.

Because there is no factual issue Combe identifies in this objection that can be resolved by available and specifically identified reliable evidence, we are denying the request for a hearing on this objection (§ 12.24(b)(1)).

*B. Category B: The Moore Study*

Combe's numbered objections included in Category B are as follows:

6. Combe objects to FDA's conclusions that the Moore study underestimated the exposure to lead.

7. Combe objects to FDA's criticisms of Moore.

8. Combe objects to FDA's finding that the lead in the Moore study could have been absorbed by other parts of the body than the blood.

11. Combe objects to FDA's argument that the absorption percentage from the Moore study is invalid because it tested only a small patch of skin.

*Objection 6.* Combe objects to ''FDA's conclusions that the Moore study underestimated the exposure of lead.'' Combe asserts that the Moore study remains the best evidence of the absorption of lead from lead acetate, that the Moore study protocol was developed with guidance from FDA, and that FDA acknowledged as much because it used some of the figures derived from the Moore study in its own modeling. See Submission, pages 33–34.

(Response to Objection 6) FDA acknowledges that the Moore study has some scientific merit. As discussed in our responses to Objections 9, 12, and 13, the fractional absorption (the percentage of the total amount of lead applied that is absorbed through the skin) from this study was used to calculate EPA's permeability coefficient (*Kp*) value (the rate at which a chemical penetrates the skin), which we used in our assessment.[3] Additionally, the results generated by Moore et al. would be reliable for a situation where the experimental conditions reflected the intended use conditions. However as explained below, the intended conditions of use of the lead acetate-containing progressive hair dyes are different from the experimental conditions in the Moore study.

New scientific information and computational tools have become available since the Moore study protocol was developed in the 1970s to 1980. We considered newer scientific information, including peer-reviewed publications describing nonclinical and clinical studies that demonstrate that dermally applied lead acetate and other lead compounds penetrate human and animal skin (Ref. 2). Additionally, newer computational tools have shown that the surface area of the application site is an important factor for estimating dermal absorption of lead and other compounds. This includes the in silico (*i.e.,* via computer simulation, as opposed to in vitro or in vivo experimental studies) ConsExpo dermal absorption model that we used to predict the percentage of dermal lead absorption. Using a surface area that is representative of the actual application area is also consistent with our recent guidance for industry,[4] which provides recommendations for conducting in vivo absorption trials for topically applied active ingredients (Ref. 8). The

[2] The draft guidance, only when finalized, will represent the current thinking of the FDA on this topic. It does not establish any rights for any person and is not binding on FDA or the public. You can use an alternative approach if it satisfies the requirements of the applicable statutes and regulations.

[3] Objection 12 provides an additional explanation of fractional absorption and *Kp*.

[4] The Wyatt Memorandum (Ref. 2) refers to the draft guidance (Ref. 6), which has since been finalized.

guidance recommends, in part, that the test article should be applied to the part of the body and maximal skin surface areas that are consistent with the final product's intended skin surface area use (Ref. 8, page 6).

By contrast, the Moore study design—where the lead acetate formulation was applied to a small surface area on the forehead—did not reflect either where lead acetate hair dye is intended to be applied or the surface area of such application. Specifically, in the Moore study, the lead acetate formulation was tested on only a small fraction of the skin surface area (*i.e.,* 8 to 10 square centimeters ($cm^2$) on the forehead instead of approximately 580 $cm^2$ for the full scalp). Additionally, the test formulation was applied to an area of skin without many hair follicles, which may have further underestimated the amount of lead absorbed. Lead absorption was measured after 12 hours and 24 hours of exposure, and the test formulation was washed off after the first 12 hours. The study did not investigate the actual directions of use of this hair dye, which results in accumulation of lead on the hair and skin.[5] Therefore, the Moore study underestimated exposure to lead from the use of lead acetate hair dyes. Based on these flaws and the additional flaws we identified in the Moore study, specifically, the formulation used in the study contained 0.12 to 0.18 percent lead (instead of 0.6 percent), the ages of the eight male test subjects range from 20 to 35 years (instead of older adults), and the short duration of test article application, which were discussed in detail in the final rule that appeared in the **Federal Register** of October 31, 2018 (83 FR 54665 at 54668 through 54670), we stated that the Moore study results could no longer be relied on to make a safety decision for the use of lead acetate as a color additive in hair dye.

Therefore, considering the reported adverse effects at low levels of lead exposure (*e.g.,* increased blood pressure, hypertension, decreased glomerular filtration rate) (83 FR 54665 at 54668), and the absence of data showing a safe level of lead exposure, we believe that the safety standard of reasonable certainty of no harm is no longer met.

Because Combe has not provided new data that address the identified flaws in the Moore study, we conclude that Combe's argument on the Moore study is insufficient to justify a hearing (§ 12.24(b)(3)). Therefore, we are denying the request for a hearing on this objection.

*Objection 7.* Combe objects to ''FDA's criticisms of Moore.'' Combe states that in 1981, FDA concluded that Moore's radioactive tracking study demonstrated a miniscule amount of lead absorption from lead acetate hair dyes. See Submission, page 35. Combe further states that the Moore study result of 0.058 percent is supported by a subsequent study by Bress and Bidanset (Ref. 2), which estimated absorption of lead acetate as 0.05 percent. See Submission, at page 37.

(Response to Objection 7) We acknowledge that, based on the scientific information available 40 years ago, we considered the 1978 radioactive tracer skin absorption study sponsored by Combe (a petitioner for CAP 3C0107) and conducted by Moore et al. (published in 1980) to be the primary study supporting the approval of lead acetate as a color additive in 1980, and that it was applicable for studying human skin lead absorption at that time. However, as discussed in our response to Objection 6 and the October 31, 2018, final rule (83 FR 54665 at 54668 through 54670), we have since identified several flaws in the Moore study design and conduct, such as applying test formulation with a lower lead concentration, on a smaller surface area of skin, and for a short period of time, when compared to the intended conditions of use. For example, as discussed previously, Moore et al. applied the lead acetate-containing formulation to an 8 to 10 $cm^2$ surface area on the forehead without many hair follicles, which is not consistent with the intended condition of use for the hair dye product (on the full scalp with many hair follicles and a skin surface area of approximately 580 $cm^2$), thereby underestimating the exposure to lead from lead acetate-containing hair dye. In addition, the result of 0.058 percent was measured 12 hours after a single application of the hair dye, which was then washed off. Therefore, the result does not represent the accumulation of lead from daily use of the hair dye. Because of these identified flaws and others described in the response to Objection 6, the fractional absorption calculated from the Moore study does not accurately represent the actual dermal absorption under the intended conditions of use, and therefore does not support the safe use of lead acetate in progressive hair dyes.

We also reviewed the study published in 1991 by Bress and Bidanset (Ref. 2). While the results from this study are consistent with those from the Moore study, Bress and Bidanset also applied the lead compound to a small skin surface area; thus, their study is of similar limited utility as the Moore study because it may also underestimate the exposure to lead from the use of hair dye. The objection failed to provide new data that address the identified flaws in the Moore study and the limitation of the Bress and Bidanset study for estimating skin absorption of lead from the use of lead acetate hair dye, and the information discussed in this objection is insufficient to justify a hearing (§ 12.24(b)(3)). Therefore, we are denying the request for a hearing on this objection.

*Objection 8.* Combe objects to ''FDA's finding that the lead in the Moore study could have been absorbed by other parts of the body than the blood.'' Combe also states that the radioactive tracer skin absorption study conducted by Moore et al. measured whole body lead (including lead in the blood, other fluids, tissues, muscle, and bone) and that Moore et al. calculated that 40 percent of the lead absorbed by the whole body was absorbed into the blood. See Submission, page 38.

(Response to Objection 8) In a March 3, 1978, final rule postponing the closing date for the provisional listing of lead acetate for use as a component of hair colors (43 FR 8790), we stated that the radioactive tracer skin absorption study protocol submitted to FDA would measure whole body counts of lead absorption, and in addition, blood and urine samples would be analyzed for measurable levels of lead (43 FR 8790 at 8793). However, as further discussed in our response to Objection 12, the use of fractional absorption to express dermal absorption depends on the study design (*e.g.,* duration of exposure, how much of the test material is in contact with a given surface area, the concentration of the substance in the matrix). Also, as stated in our response to Objection 6, given its fundamental flaws, the Moore study underestimated exposure to lead from the use of lead acetate hair dyes. Therefore, we can no longer rely on this study's exposure estimate to assure the safe use of lead acetate in hair dye. Combe does not point to any other studies that have evaluated lead absorption across the full surface area of the scalp, nor does Combe point to other studies demonstrating an absorption estimate after correcting the flaw in the Moore study that could provide evidence that the use of lead acetate in hair dye is safe.

A hearing will not be granted on the basis of mere allegations or general descriptions of positions and contentions (§ 12.24(b)(2)). Therefore, in

[5] The manufacturer's use directions state that after the initial application, users might apply the progressive hair dye daily until the desired color shade is achieved (usually takes 2–3 weeks), and then once or twice a week to maintain the hair color.

the absence of any other evidence, studies, or new scientific information addressing the flaws identified in the Moore study that would demonstrate that the use of lead acetate in hair dye is safe, we are denying the request for a hearing on this objection.

*Objection 11.* Combe objects to ''FDA's argument that the absorption percentage from Moore is invalid because it tested only a small patch of skin.'' See Submission, page 40. Combe acknowledges that the scalp has a larger surface area, but states that the use instruction for its hair dye product is to apply the dye to the hair while avoiding ''areas you want to keep gray'' and not to apply the product to the scalp. See Submission, page 41. Thus, Combe claims that its product ''would never touch the whole scalp.'' Ibid. Combe asserts that Moore's approach of applying the lead acetate formulations directly to skin on the forehead was a conservative approach that would substantially overestimate absorption. Combe further asserts that,

> Moore applied a small amount of hair dye to a small patch of skin and measured how much of that small amount was absorbed. Thus, Moore was able to estimate the percentage of the applied dye that enters the body. This fraction (0.058 percent) was then multiplied by the actual amount of hair dye that would reach the head, yielding the amount of absorption that can be expected from the whole application. By such multiplication, Moore took into account the application to more than just a small patch of skin. Moore considered the entire scalp.

See Submission, pages 41–42.

Combe also asserts that the way Moore estimated absorption ''remains the standard way that industry and regulators do it today.'' See Submission, page 42. Specifically, Combe states that FDA ''evaluated the dermal absorption of lead as a percentage of the amount applied to the skin'' in its 2016 draft guidance for lead as an impurity in cosmetic lip products and externally applied cosmetics, and that this approach is similar to the approach in the Moore study. Ibid.

(Response to Objection 11) Our criticism of the Moore study is not limited to its testing of only a small patch of skin; however, the size of the skin tested is one relevant factor.

We note that Combe asserts that lead acetate ''would never touch the whole scalp.'' See Submission, page 41. Yet, Combe failed to provide data showing how much of the scalp (by the percent area) is estimated to be exposed to the hair dye. Without such data, our assumption that the hair dye would be applied to the surface area of the scalp that would be expected to be treated with the hair dye product is consistent with the practices used in an appropriately designed dermal absorption study. For example, see the European Commission's Scientific Committee on Consumer Products' (SCCP's) guidance for testing and evaluating safety of cosmetic ingredients (Ref. 9). Page 44 of the SCCP guidance document states, ''Hence, when dermal absorption is expressed as a percentage, the absorbed amount resulting from *in vitro* tests has to be expressed as a percentage of the dose applied in real in use conditions, that can be estimated by the ratio of the default amount of formulation applied in real conditions and the respective default value of skin surface area per product type.''

In addition, it is likely that some users would apply the product to the whole scalp. For example, Combe's Grecian® Formula16® liquid and cream products use instructions state that the user should apply the lead acetate-containing hair dye ''to cover gray totally, until hair feels slightly damp;'' ''[c]omb hair as usual;'' ''if desired apply daily until hair reaches desired shade;'' and ''[t]o maintain your natural look, apply once or twice a week thereafter'' (Ref. 10). The pictures provided in the use instructions appear to indicate that the dye may be applied on the area of the head covered by hair (Ibid.). Accordingly, we expect that some users would follow these instructions and apply the dye and comb the damp hair such that the dye would widely reach the scalp.

Nonetheless, Combe asserts that Moore considered ''the entire scalp,'' by multiplying the percentage of the applied dye that enters the body (*i.e.,* the fractional absorption) by the ''actual amount of hair dye that would reach the head.'' See Submission, page 41. Experimental conditions can impact fractional absorption and are not independent of skin loading conditions, which can have dramatic effects on the results (Refs. 11 and 12). The experimental conditions in the Moore study were drastically different from the intended conditions of use, thus the fractional absorption measured in this experiment is not representative of the real fractional absorption under the intended use conditions. For example, a fractional absorption obtained by applying 0.1 milliliter (mL) of hair dye formulation containing 0.12 percent lead acetate to an 8 or 10 $cm^2$ area of skin on the forehead without many hair follicles and measured after 12 hours does not accurately reflect the actual use conditions where 0.18 mL of formulation containing up to 0.6 percent lead is applied to a 580 $cm^2$ area of scalp area with many hair follicles and is reapplied every 24 hours until the hair reaches the desired shade (Refs. 1 and 2). Thus, the relative dermal loading of the hair dye was 0.01 mL/$cm^2$ (0.1 mL/10 $cm^2$) in the Moore study versus 0.00031 mL/$cm^2$ (0.18 mL/580 $cm^2$), which is a 32-fold difference that influences dermal absorption. We do not consider a study design, in which the test formulation (with lower lead acetate concentration) was applied to a small surface area on the forehead (instead of the full scalp) and washed off after an application period-to be a conservative approach as Combe asserts, nor do we consider it an accurate measure of lead exposure from the product use. Thus, we believe that the Moore study underestimated the total amount of lead that was absorbed.

With regard to FDA's 2016 draft guidance, as discussed in our response to Objection 18, this guidance is specific to lead present in certain cosmetics as an impurity. It is important to note the maximum permitted use level of 6,000 ppm lead acetate intentionally added to a hair dye is 600 times greater than the maximum recommended lead level of 10 ppm as an impurity. For the draft guidance, FDA evaluated the dermal absorption of lead as a percentage of the amount applied to the skin in order to assess exposure more generally. The draft guidance incorporated usage data for three representative cosmetic product categories (lipstick, eye shadow, and body lotion) and estimated whole body exposure to lead. The draft guidance considered average daily usages of lipstick, eye shadow, and body lotion to make generalizations for lead as an impurity in all categories of cosmetics covered by this guidance, rather than in each specific category.

By contrast, for our review of lead acetate, we considered specifically how much lead would be absorbed from a hair dye to ensure that this intended use of lead acetate meets the safety standard for color additives. Because use of lead acetate as a hair dye is associated with a specific usage scenario limited to only the scalp, the intended conditions of use, including the surface area of application, were important in calculating absorption. Because of study design limitations with the Moore study, we used a published *Kp* value (see response to Comment 12 that addresses the *Kp* value) in a ConsExpo model to estimate exposure and predict potential percentages of dermal lead absorption for this specific usage scenario.

A hearing will not be granted on the basis of mere allegations or general descriptions of positions and

contentions (§ 12.24(b)(2)). Therefore, in the absence of any other evidence, studies, or new scientific information addressing the flaws identified in the Moore study that would demonstrate that the use of lead acetate in hair dye is safe, we are denying the request for a hearing on this objection.

*C. Category C: ConsExpo In Silico [Computer] Modeling*

Combe's numbered objections included in Category C are as follows:

9. Combe objects to FDA's reliance on a novel and unvalidated computer model.

10. Combe objects to FDA's treating an unvalidated computer model as more reliable than robust human data.

*Objection 9.* Combe objects to ''FDA's reliance on a novel and unvalidated computer model.'' Combe states that FDA failed to explain whether the model is validated and why it used this particular model. See Submission, page 39. Combe further claims that FDA never explained the details of the model, ''how the math works, or why FDA's inputs to the model are reasonable.'' Ibid.

(Response to Objection 9) Contrary to Combe's contention, the ConsExpo dermal absorption model is not novel. The ConsExpo dermal absorption model is a mathematically based modeling program that enables general estimation of human exposure to chemicals found in consumer products via inhalation, skin absorption, and oral intake. The description of the basis of the ConsExpo dermal absorption model was first published in 1996 (Ref. 13). The program was developed by the Netherlands National Institute for Public Health and the Environment (RIVM) and is available to the public. The program updates are now released by RIVM in collaboration with other European counterpart institutes, including the French Agency for Food, Environmental and Occupational Health and Safety, the German Institute for Risk Assessment, the Federal Office of Public Health (Switzerland), and Health Canada. This model has been used by other regulators (*e.g.,* Health Canada) and has been cited in various scientific publications, as listed in Appendix 6 of the Wyatt memorandum (Refs. 2 and 14).

In the Wyatt memorandum (Ref. 2, Appendices 4 to 6), and in the October 31, 2018, final rule (83 FR 54665 at 54670), we explained our decision to use the in silico modeling to predict the percentage of dermal absorption of lead by the surface area of the full human scalp and all the parameters and inputs to the model. We chose to use in silico modeling because, as described in our response to Objection 7, we had identified several flaws in the Moore study design that resulted in the underestimation of lead exposure from this intended use.

Using EPA's *Kp* value for lead acetate,[6] we used the ConsExpo dermal absorption modeling software to estimate absorption based on the intended conditions of use (including the relevant lead concentration, surface area, and duration of application period). As stated in Appendix 4 of the Wyatt memorandum (Ref. 2), we also performed an internal validation by applying parameters identical to experimental conditions used in the Moore study into the ConsExpo dermal absorption model. The model successfully predicts Moore's experimental results using Moore's study parameters from experimental conditions, which can be taken as evidence of validation of the model. We believe that no further validation is needed for the purpose of using the model to fill gaps in experimental data.

The objection failed to include any new information or data that would refute our conclusion that the ConsExpo dermal absorption model was appropriate to use in the manner that we applied it. A hearing will not be granted on the basis of general descriptions of positions and contentions (§ 12.24(b)(2)). The objector must, at a minimum, raise a material issue concerning which a meaningful hearing might be held. Therefore, we are denying the request for a hearing on this objection.

*Objection 10.* Combe objects to ''FDA's treating an unvalidated computer model as more reliable and robust than human experimental data.'' In this objection, Combe insists that the computer model is not needed because human data are available and that ''it is unscientific for a computer model to be used to trump robust human data.'' See Submission, page 40.

(Response to Objection 10) FDA agrees that human studies, when scientifically well-designed and conducted, provide more robust and reliable data than computer modeling in the safety evaluations of color additives. As discussed in the Wyatt memorandum and in the October 31, 2018, final rule (83 FR 54665 at 54668 through 54672), we reevaluated the Moore study and identified significant scientific flaws. Based on this reevaluation, our current thinking regarding the radioactive tracer skin absorption study conducted by Moore et al., is that it is no longer possible to rely on this human data because of these significant flaws. Consequently, we no longer consider it scientifically sound to continue the use of the experimental fractional absorption number derived from this study when the experimental conditions are not consistent with the intended conditions of use for the hair dye product. We believe that the flaws in the Moore study may have resulted in underestimating the exposure to lead from lead acetate-containing hair dye. We also believe that it is scientifically valid and appropriate to use the in silico computer model to extrapolate and predict the absorption to fill the data gaps created by the absence of data from human experimental studies designed and conducted to simulate the intended conditions of use for lead acetate-containing hair dye.

In this objection, Combe did not provide any information to address the significant flaws in the Moore study that we identified. This objection also failed to identify any other human studies that we could consider in lieu of the in silico computer model. Therefore, we are denying the request for a hearing on this objection.

*D. Category D: Skin Permeability Coefficient*

Combe's numbered objections included in Category D are as follows:

12. Combe objects to FDA's reliance on a ''permeability coefficient'' for lead instead of fractional absorption.

13. Combe objects to FDA's use of a permeability coefficient for lead acetate that EPA repudiated and replaced with a much lower estimate.

*Objection 12.* Combe objects to ''FDA's reliance on a 'permeability coefficient' for lead instead of fractional absorption.'' Combe argues that FDA has not demonstrated that the ConsExpo dermal absorption model has been validated for inorganic substances such as lead, and that FDA does not explain how the permeability coefficient for lead acetate was derived and whether it is appropriate for use in the model. See Submission, page 44. Combe further asserts that we are relying on an outdated permeability coefficient from EPA. See Submission, pages 43–44. Because this last argument is also the subject of Objection 13 (see Submission, page 45), we will respond to this assertion in our response to Objection 13 below.

(Response to Objection 12) There are two ways to calculate skin absorption for exposure assessments: (1) The use of

[6] *Kp* is a chemical-specific absorption-related constant that is independent of the surface area, concentration, etc. (see further description of *Kp* in our response to Objection 12).

the *Kp* and (2) the use of fractional absorption. *Kp* is a constant (*i.e.,* the rate at which a chemical penetrates across the stratum corneum (the outermost layer of the skin, *e.g.,* centimeters per hour (cm/h) or meters per second (m/s)). The fractional absorption is the percentage of the total amount of lead applied that is absorbed through the skin and depends on the study design (*e.g.,* duration of exposure, how much of the test material is in contact with a given surface area, the concentration of the substance in the matrix, etc.). Thus, the extension of an experimental fractional absorption number is only scientifically valid when the experimental conditions are similar, if not identical, to the intended condition of use. As discussed previously, the experimental conditions in the Moore study are significantly different from the intended conditions of use for the lead acetate-containing hair dye. For example, as mentioned in our response to Objection 9, Moore's study was conducted with formulations containing 6 millimole per liter (mmol/L) or 9 mmol/L lead acetate (equivalent to 0.12 or 0.18 percent lead respectively), which are three to five times lower than the maximum use level (0.6 percent lead) in hair dyes. Second, the test formulation(s) were reportedly applied to a skin surface area of 8 to 10 $cm^2$ on the forehead, an area of the skin without hair follicles, while lead acetate-containing hair dye is intended to be applied to the full scalp that has many hair follicles and a skin surface area of approximately 580 $cm^2$. Third, the 12-hour application period in the Moore study may be too short to assess the full extent of percutaneous absorption of lead under the intended conditions of use, which in some cases could remain on the scalp for 24 hours or longer and may accumulate due to repeated applications. Therefore, application to the small surface area, use of a formulation with a lower lead concentration, and a shorter exposure period used in the Moore study all resulted in an underestimation of the fractional absorption number of lead acetate.

Therefore, we believe it is appropriate to use the *Kp* (which allows the incorporation of parameters, such as the surface area, concentration, and duration of exposure) in the modeling to determine dermal absorption. We note that *Kp* is often the preferred, more reliable, and commonly utilized parameter to quantify percutaneous absorption of chemicals from solutions (Refs. 15 and 16).

We also note that the ConsExpo dermal absorption model can be applied to an organic or inorganic compound because the underlying basis for the model is the well-known Fick's law, which describes the transport of mass, through diffusion, from a region of higher concentration to a region of lower concentration. The Fick's law-based equation for the ConsExpo dermal absorption model is described in the user manual as follows (Ref. 17):

$$A_{abs} = A_{skin} \times (1 - \exp(-P \times S \times t/V))$$

Where:

$A_{abs}$ = Amount of substance absorbed (kg)
$A_{skin}$ = Amount of substance on the skin (kg)
P = Permeability of the skin (m/s) (Equivalent to *Kp* in the context)
V = Volume of the substance on the skin ($m^3$)
S = Exposed skin area ($m^2$)
t = Exposure time (s)

As shown in the equation above, the only physicochemical property related to the chemical itself is the *Kp;* chemical composition is not a part of the equation. Thus, this Fick's law-based approach, which is not dependent on chemical composition, does not need to be specifically validated according to whether the substance is organic or inorganic because the permeability *(Kp)* is a set number. As discussed above in our response to Objection 9, we used the ConsExpo dermal absorption model to fill in the existing experimental data gaps (*i.e.,* related to the small surface area, lower lead concentration, and shorter duration of exposure) in order to address the differences between the experimental conditions and the approved intended conditions of use.

Because the objection failed to provide new data that would change our conclusion, and the information discussed in the objection is insufficient to justify a hearing (§ 12.24(b)(3)), we are denying the request for a hearing on this objection.

*Objection 13.* Combe objects to ''FDA's use of a permeability coefficient for lead acetate that EPA repudiated and replaced with a much lower estimate.'' See Submission, page 45. Combe states that FDA used a permeability coefficient for lead acetate from, ''an internal report that EPA has since repudiated.'' Ibid. Combe further states: ''FDA's reliance on this figure is particularly unsupportable given that EPA in 2004 actually published a permeability coefficient for lead acetate that is an order of magnitude lower than the internal interim 1992 estimate.'' Ibid.

(Response to Objection 13) We acknowledge that we used the permeability coefficient in EPA's 1992 interim report (Ref. 18) (the larger *Kp* value of $4 \times 10^{-6}$ cm/hr), rather than in EPA's 2004 final guidance (Ref. 19) (the smaller *Kp* value of $0.0005 \times 10^{-3}$ cm/hr, which is $5 \times 10^{-7}$ cm/hr), entitled ''Risk Assessment Guidance for Superfund Volume I: Human Health Evaluation Manual.'' The *Kp* values in EPA's 1992 and 2004 documents were both based on the same data set (the Moore study) and they are both valid. Specifically, the fractional absorption reported by the Moore study was in a range between 0 to 0.3 percent (Refs. 18, 19, 21, and 22). While the *Kp* value in EPA's 1992 document was based on the upper limit of the reported range (namely a fractional absorption of 0.3 percent), the *Kp* value in EPA's 2004 document [7] was based on the mean of the reported data range (minus the highest value for injured skin (''dry and scratch'' in the Moore study)) (namely a fractional absorption of 0.058 percent, instead of 0.3 percent). Using a higher *Kp* value—the upper limit of the reported range—is more conservative because it results in higher predictions of dermal absorption. FDA's use of this more conservative *Kp* value is consistent with ensuring there is a reasonable certainty of no harm from the use of this color additive.

Had FDA used the smaller *Kp* value from EPA's 2004 guidance, the predicted fractional absorption number would have been 3.8 percent (acknowledged by Combe in Objection 13; see Submission, page 47). The 3.8 percent fractional absorption is more than 10 times higher than what had been reported in the Moore study as the highest absorption value. This discrepancy in fractional absorption supports our conclusion that the Moore study underestimated the amount of lead absorbed and therefore was flawed. In addition, as stated in the Wyatt memorandum (Ref. 2, p. 19), FDA did not rely on the predicted levels of transdermal absorption from modeling to quantify the extent of lead acetate absorption. Rather, FDA used the predictions from modeling to show that the Moore study, which was relied on for the listing of lead acetate as an approved color additive in 1980, may have significantly underestimated exposure to transdermally absorbed lead from the use of lead acetate hair dyes (Ref. 2).

The objection failed to provide new data that would change our conclusion that there is no longer reasonable certainty that no harm would result from the listed use of lead acetate in hair dye, and the information discussed in their objection is insufficient to

[7] We disagree with Combe's characterization of EPA ''repudiating'' the prior Kp value in the EPA 1992 document. We also note that in its 2004 document, FDA did not independently derive the Kp value of $0.0005 \times 10^{-3}$ cm/hr for lead acetate and instead cited Hostynek et al. (1998).

justify a hearing (§ 12.24(b)(3)). Therefore, we are denying the request for a hearing on this objection.

*E. Category E: Lead Exposure and Blood Lead Levels*

Combe's numbered objections included in Category E are as follows:

3. Combe objects to FDA's reliance on sources that discuss blood levels of lead and not exposure levels (see, *e.g.,* NTP monograph).

14. Combe objects to FDA's conclusion that lower median blood levels in lead since 1990 mean that any the lead contributed by lead acetate is less safe now.

15. Combe objects to FDA's entire analysis because it is missing two critical links—FDA never relates exposure from lead acetate to any change in blood lead levels, and thus it never relates it to any predicted harm.

16. Combe objects to FDA's whole argument as FDA never links exposure to lead from lead acetate to a change in steady-state blood lead levels.

17. Combe objects to FDA's conclusions about the effect of lead acetate on blood lead levels.

*Objection 3.* Combe objects to ''FDA's reliance on sources that discuss blood levels of lead and not exposure levels (see, *e.g.,* NTP monograph).'' Combe asserts that the NTP monograph does not support that lead is harmful at low levels in adults. See Submission, pages 30–32. Combe argues that the NTP showed increased risk of potential health effects (heart and kidney) associated with blood lead levels of 5–10 micrograms per decaliter (µg/dL), while noting that the current mean blood lead level in U.S. adults is 0.92 µg/dL. See Submission, at pages 30–31. Combe asserts that there is no evidence that the use of lead acetate-containing hair dye can raise blood lead levels to >5 µg/dL. See Submission, page 31.

(Response to Objection 3) With regard to the NTP monograph, the evaluation found sufficient evidence for an association of adverse effects on kidney function with blood lead levels of less than 5 µg/dL in adults (Ref. 3, page 87). A recent literature review by FDA found that ''the overall body of evidence . . . suggests that some adverse effects may occur at a blood lead level of 3 µg/dL . . . in adults'' (Ref. 20). In addition, as discussed in our response to Objection 2, there is a lack of evidence of a safe level of exposure for lead. For example, JECFA has stated that ''because the dose-response analyses do not provide any indication of a threshold for the key effects of lead, the Committee concluded that it was not possible to establish a new PTWI that would be considered to be health protective'' (Ref. 4, page 212). Furthermore, Combe fails to provide any data that shows the impact of the use of lead acetate-containing hair dye on blood lead levels.

Combe has not provided scientific evidence to support its contention that the intended use of lead acetate is safe. A hearing will not be granted on the basis of mere allegations or general descriptions of positions and contentions (§ 12.24(b)(2)). Therefore, we are denying the request for a hearing on this objection.

*Objection 14.* Combe objects to ''FDA's conclusion that lower median blood levels in lead since 1990 mean that any [of] the lead contributed by lead acetate is less safe now.'' Combe asserts that because blood lead levels in the U.S. population are lower now, any amount of lead contributed by lead acetate ''is safer now because of the overall lower levels of lead.'' See Submission, page 48.

(Response to Objection 14) In the October 31, 2018, final rule, we concluded that any increase in exposure to lead resulting from use of lead acetate containing hair dye can no longer be considered insignificant in terms of public health (83 FR 54665 at 54671). Given that there is no known safe exposure level for lead, we disagree that any amount of lead contributed by lead acetate-containing hair dye is safer now. The decrease in blood lead levels since 1990 resulted from the actions taken by multiple regulatory and public health agencies to reduce lead exposure in order to minimize potential adverse effects. For example, we have taken measures to reduce exposure to lead from our-regulated products to the lowest level that is technically feasible to protect the public health. Such measures include (but are not limited to) prohibiting the use of tin-coated lead foil capsules for wine bottles (21 CFR 189.301) and prohibiting the use of lead-soldering in food cans (21 CFR 189.240). The decrease in blood lead levels in the U.S. population, resulting from these measures, does not mean that the use of lead acetate in hair dye is safe.

To the contrary, as the science has evolved, more sensitive endpoints have been identified at lower blood lead levels than known in the 1970s. A growing body of evidence indicates that adults may experience adverse health impacts from exposure to lead levels lower than those previously believed to be harmful. For example, in 2012, the NTP provided evidence of adverse effects in adult humans (*e.g.,* increased blood pressure, hypertension, decreased glomerular filtration rate) at blood lead levels less than 10 µg/dL, based on epidemiological evidence (Ref. 3). Also see recent literature review by FDA that ''the overall body of evidence . . . suggests that some adverse effects may occur at a blood lead level of 3 µg/dL . . . in adults'' (Ref. 20). We further note that any additional lead exposure would contribute to the occurrence of the reported adverse effects of lead.

Combe has not provided data to demonstrate that the intended use of lead acetate-containing hair dyes would not elevate the lead level in blood and other tissues. A hearing will not be granted on the basis of mere allegations or general descriptions of positions and contentions (§ 12.24(b)(2)). Therefore, we are denying the request for a hearing on this objection.

*Objection 15.* Combe ''objects to FDA's entire analysis because it is missing two critical links—FDA never relates exposure from lead acetate to any change in blood levels, and thus it never relates it to any predicted harm.'' See Submission, page 49. Combe argues that FDA, in its conclusion in the final rule that ''we no longer can conclude that exposure to lead from lead acetate-containing hair dye has no discernible effect on the steady-state blood lead level,'' did not link exposure to lead from lead acetate to any change in steady-state blood lead levels. See Submission, page 49.

(Response to Objection 15) To satisfy its burden that would justify its request for a hearing, it is the objector's responsibility to provide data and scientific information that calls into question our conclusions. It is not enough to just make an allegation; the objection needs to contain scientific information to demonstrate the safety of the color additive under the intended conditions of use. We evaluated the data and information submitted in the petition (CAP 7C0309) along with comments submitted in response to the petition and other available information (including published literature) to arrive at our conclusion. Based on currently available data, we conclude that there is no known safe exposure level for lead. This view is consistent with conclusions by other U.S. agencies responsible for ensuring public health (*e.g.,* CDC, EPA) and international bodies (*e.g.,* JECFA).

Combe has not provided data showing that use of lead acetate-containing hair dyes would not increase the lead level in blood or in other tissues (including bones). Because a hearing will not be granted on the basis of mere allegations or general descriptions of positions and contentions (§ 12.24(b)(2)), we are denying the request for a hearing on this objection.

*Objection 16.* Combe ''objects to FDA's whole argument as FDA never

links exposure to lead from lead acetate to a change in steady-state blood levels.'' See Submission, page 50.

(Response to Objection 16) Combe's argument in Objection 16 is essentially the same as its argument in Objection 15. We reiterate that our determination is based on whether the currently available scientific evidence shows that there is a reasonable certainty of no harm from the use of lead acetate-containing hair dye.

A hearing will not be granted on the basis of mere allegations or general descriptions of positions and contentions (§ 12.24(b)(2)). Therefore, we are denying the request for a hearing on this objection.

*Objection 17.* Combe objects to ''FDA's conclusions about the effect of lead acetate on blood lead levels.'' See Submission, page 51. Combe argues that ''the amount of lead that lead acetate contributes to daily intake (*e.g.,* 0.3 μg) is less than 1 percent of the amount contributed daily by food, and thus the effect on steady-state blood lead levels would be expected to be extremely small—on the order of 0.01 μg or less.'' See Submission, page 52.

(Response to Objection 17) We reiterate that, in lead acetate-containing hair dyes, up to 6,000 ppm (mg/kg) lead acetate (calculated as lead) is intentionally added as an ingredient to achieve a coloring effect; as such, the lead acetate must meet the safety standard of a reasonable certainty of no harm. There is no lead-containing compound approved for use as a food additive or color additive in food. Thus, dietary exposure to lead results from lead that is present as an impurity in raw materials that manufacturers are unable to avoid through good manufacturing practices.

The objection failed to provide new data that changes our conclusion that the scientific evidence does not support any level of lead intake that is safe. Therefore, the information discussed in this objection is insufficient to justify a hearing (§ 12.24(b)(3)), and we are denying the request for a hearing on this objection.

*F. Category F: Permitted Lead Acetate Levels*

Combe's numbered objection in Category F is as follows:

*Objection 19.* Combe objects to ''FDA's failure to consider reducing the permitted lead acetate level under 21 CFR 73.2396 from 0.6 percent to 0.153 percent.'' Combe states, ''Since 1998, Combe's lead acetate hair dyes have contained only 0.153 percent lead, approximately a quarter of the permitted 0.6 percent under 21 CFR Section 73.2396.'' Submission, page 56. Combe asserts that ''the Agency refused to account for this fact in its Final Rule.'' Ibid.

(Response to Objection 19) We addressed this consideration in the final rule in our response to Combe's comment (see 83 FR 54665 at 54672). Combe states that it reformulated its lead acetate-containing products in 1998. See Submission Appendix A, page 1. Reformulating the hair dye product by reducing the lead content from 0.6 percent to 0.153 percent may reduce the exposure, but it does not establish a safe level of exposure to lead from lead acetate when used as a color additive in hair dye. We reiterate that we are not aware of data demonstrating that any level of lead is safe. We note also JECFA's concluding statement that it was not possible to establish a new PTWI for lead that would be considered health protective.

Moreover, a color additive regulation is not manufacturer or sponsor-specific and, as such, any manufacturer can use a listed color additive within the limitations of the regulation. Therefore, it is appropriate for FDA to conduct its evaluation associated with the repeal of § 73.2396 based on the maximum permitted use level of 0.6 percent (6,000 ppm; mg/kg) of lead acetate (calculated as lead) in hair dyes.

Combe has not provided data that demonstrates with reasonable certainty that no harm would result from the use of 6,000 ppm (mg/kg) lead acetate (calculated as lead) as a color additive in cosmetics for coloring hair on the scalp. A hearing will not be granted on the basis of mere allegations or general descriptions of positions and contentions (§ 12.24(b)(2)). Therefore, we are denying the request for a hearing on this objection.

## V. Summary and Conclusions

Section 721 of the FD&C Act requires that a color additive be shown to be safe prior to marketing. Under § 70.3(i), a color additive is safe if there is convincing evidence that establishes with reasonable certainty that no harm will result from the intended use of the color additive. When new scientific evidence comes to light that calls into question the safety of an approved color additive, we will evaluate the new evidence and determine if the color additive continues to be safe under the condition of use.

In our October 31, 2018, final rule, we stated that, following a full evaluation of the data submitted in support of CAP 7C0309 and other pertinent data and information, we concluded that the data currently available no longer demonstrate that there is a reasonable certainty of no harm from the use of lead acetate as a color additive in hair dyes authorized under § 73.2396. This conclusion was based on the recognition of the current consensus that there is no safe exposure level for lead; our reevaluation of the 1980 skin absorption Moore study that may have resulted in an underestimation of exposure to lead from its use in hair dye; and the fact that blood lead levels in the United States have dropped significantly since 1980, so we no longer could conclude that exposure to lead from lead acetate-containing hair dyes has no discernible effect on the steady-state blood lead level. Therefore, we issued a final rule repealing § 73.2396.

Our responsibility in listing a color additive for safe use in a regulated product is to evaluate the currently available scientific data and other pertinent information to determine with reasonable certainty that the color additive is not harmful under the intended conditions of use. Considering all the scientific information currently available, we have not changed our conclusion that the current data no longer support the safe use of lead acetate as a color additive in cosmetics intended to color hair on the scalp.

The burden is on the objector to provide pertinent evidence that calls into question our conclusion. Despite all its objections, Combe has not provided any new scientific data or information that establish with reasonable certainty that there is a level of lead exposure that could be considered safe and health protective. Combe has also not provided any new data demonstrating that no harm would result from the use of up to 6,000 ppm of lead acetate (calculated as lead) as a color additive intentionally added to cosmetics for coloring hair on the scalp.

Therefore, we have determined that the objections do not raise any genuine and substantial issue of fact that can be resolved by an evidentiary hearing (§ 12.24(b)). Accordingly, we are denying the requests for a hearing. Furthermore, after evaluating the objections, we have concluded that the objections do not provide any basis for us to reconsider our decision to issue the final rule amending § 73.2396 to no longer authorize the use of lead acetate as a color additive in cosmetics intended for coloring hair on the scalp.

Under sections 701(e)(2) and 721(d) of the FD&C Act, the filing of objections operates to stay the effectiveness of our repeal of § 73.2396 until we take final action on the objections. Section 701(e)(3) of the FD&C Act further stipulates that, as soon as practicable, the Secretary shall, by order, act upon such objections and make such order

public. We have completed our evaluation of the objections and conclude that a continuation of the stay is not warranted.

In the absence of any other objections and requests for a hearing, we conclude that this document constitutes final action on the objections received in response to the October 31, 2018, final rule as prescribed in section 701(e)(2) of the FD&C Act. Therefore, under sections 701 and 721 of the FD&C Act, notice is given that the objections and the requests for a hearing filed in response to the final rule that appeared in the **Federal Register** of October 31, 2018, do not form a basis for further stay of the effectiveness of the final rule. Accordingly, we are ending the stay of the final rule and we are repealing the listing for lead acetate in § 73.2396 as a color additive in cosmetics intended for coloring hair on the scalp as of January 6, 2022.

In the October 31, 2018, final rule, we stated our intention to exercise enforcement discretion for a period of 12 months from the effective date of the final rule regarding marketed hair dye products that contain the color additive lead acetate to provide an opportunity for industry to deplete the current stock of hair dye products with lead acetate and reformulate products prior to enforcing the requirements of the final rule. We also stated that we had taken into consideration the fact that bismuth citrate, which is listed in § 73.2110 for use in cosmetic hair dye products at a level up to 2.0 percent weight/volume, was already being used as an alternative for lead acetate in hair dye products marketed both in the United States and other countries. Therefore, our intent is to exercise enforcement discretion for a period of 12 months from the effective date of the final rule for those hair dye products containing the color additive lead acetate that comply with the requirements of § 73.2396, including the specifications, uses and restrictions, and labeling requirements.

## VI. References

The following references marked with an asterisk (*) are on display with the Dockets Management Staff (see **ADDRESSES**) and are available for viewing by interested persons between 9 a.m. and 4 p.m., Monday through Friday; they are also available electronically at *https://www.regulations.gov.* References without asterisks are not on public display at *https://www.regulations.gov* because they have copyright restriction. Some may be available at the website address, if listed. FDA has verified the website addresses, as of the date this document publishes in the **Federal Register**, but websites are subject to change over time.


1. Moore, M.R., P.A. Meredith, W.S. Watson, et al., 1980. ''The Percutaneous Absorption of Lead-203 in Humans from Cosmetic Preparations Containing Lead Acetate, as Assessed by Whole-Body Counting and Other Techniques.'' *Food and Cosmetics Toxicology,* 18:399–405.

*2. Memorandum from M.K. Wyatt, Cosmetics Division, Office of Cosmetics and Colors, CFSAN, FDA to M. Harry, Division of Petition Review, Office of Food Additive Safety, CFSAN, FDA, September 18, 2018.

*3. HHS, National Toxicology Program, ''NTP Monograph on Health Effects of Low-Level Lead,'' June 2012. *https://ntp.niehs.nih.gov/ntp/ohat/lead/final/monographhealtheffectslowlevellead_newissn_508.pdf.*

4. Evaluation of Certain Food Additives and Contaminants: Seventy-Third Report of the Joint FAO/WHO Expert Committee on Food Additives, WHO Tech Report Series No. 960, 2011. *http://apps.who.int/iris/bitstream/10665/44515/1/WHO_TRS_960_eng.pdf.*

5. WHO, Fact Sheet: Lead Poisoning and Health, August 23, 2019. *https://www.who.int/news-room/fact-sheets/detail/lead-poisoning-and-health.*

*6. HHS, FDA, Center for Food Safety and Applied Nutrition. ''Lead in Cosmetic Lip Products and Externally Applied Cosmetics: Recommended Maximum Level.'' Draft Guidance, December 2016, available at *https://www.fda.gov/media/99866/download.*

*7. Supporting Document for Recommended Maximum Lead Level in Cosmetic Lip Products and Externally Applied Cosmetics. December 2016, Docket No. FDA–2014–D–2275. *http://wcms-internet.fda.gov/cosmetics/cosmetics-guidance-documents/supporting-document-recommended-maximum-lead-level-cosmetic-lip-products-and-externally-applied#VIII.*

*8. HHS, FDA, Center for Drug Evaluation and Research. Maximal Usage Trials for Topical Active Ingredients being Considered for Inclusion in an Over-The-Counter Monograph: Study Elements and Considerations. Draft Guidance for Industry. Clinical Pharmacology/OTC, May 2018; Final Guidance: Maximal Usage Trials for Topically Applied Active Ingredients Being Considered for Inclusion in an Over-The-Counter Monograph: Study Elements and Special Considerations, May 2019. *https://www.fda.gov/regulatory-information/search-fda-guidance-documents/maximal-usage-trials-topically-applied-active-ingredients-being-considered-inclusion-over-counter.*

9. European Commission. ''The SCCP'S Notes of Guidance for the Testing of Cosmetic Ingredients and Their Safety Evaluation.'' 6th Revision, 2006. *https://ec.europa.eu/health/ph_risk/committees/04_sccp/docs/sccp_o_03j.pdf.*

*10. *Easy Directions.* Grecian® Formula16® LIQUID. Grecian® Formula16® CREAM.

11. Frasch, H.F., G.S. Dotson, and S. Wilkinson. ''Analysis of Finite Dose Dermal Absorption Data: Implications for Dermal Exposure Assessment.'' *Journal of Exposure Science & Environmental Epidemology,* 24: 65–73, 2014. *https://www.ncbi.nlm.nih.gov/pmc/articles/PMC3868874/.*

12. Kissel, J.C. ''The Mismeasure of Dermal Absorption.'' *Journal of Exposure Science & Environmental Epidemiology,* 21(3): 302–309, 2010. *https://pubmed.ncbi.nlm.nih.gov/20424648/.*

13. Van Veen, M.P. ''A General Model for Exposure and Uptake from Consumer Products.'' *Risk Analysis,* 16:331–338, 1996.

14. Health Canada. ''Screening Assessment Acrylates and Methacrylates Group. October 2018. *https://www.canada.ca/en/environment-climate-change/services/evaluating-existing-substances/screening-assessment-acrylates-methacrylates-group.html.*

15. Fitzpatrick D., J. Corish, and B. Hayes. ''Modelling Skin Permeability for Risk Assessment—The Future.'' *Chemosphere,* 55:1309–1314, 2004.

16. Korinth, G., K.H. Schaller, and H. Drexler. ''Is the Permeability Coefficient *Kp* a Reliable Tool in 34 Percutaneous Absorption Studies?'' *Archives of Toxicology,* 79, 155–159, 2005.

17. National Institute for Public Health and the Environment, Ministry of Health, Welfare and Sport. ConsExpo Web, Consumer Exposure models model documentation, 2017. *https://www.rivm.nl/bibliotheek/rapporten/2017-0197.pdf.*

*18. EPA. Interim Report. ''Dermal Exposure Assessment: Principles and Applications.'' Office of Health and Environmental Assessment EPA/600/8–91/011B, January 1992.

*19. EPA (July 2004). ''Risk Assessment Guidance for Superfund Volume I: Human Health Evaluation Manual (Part E, Supplemental Guidance for Dermal Risk Assessment) Final.'' EPA/540/R/99/005, OSWER 9285.7–02EP, PB99–962212.

20. Dolan, L.C., B.M. Flannery, D. Hoffman-Pennesi, et al. ''A Review of the Evidence to Support Interim Reference Level for Dietary Lead Exposure in Adults.'' FDA, Center for Food Safety and Applied Nutrition, *Journal of the International Society of Regulatory Toxicology and Pharmacology,* 111. 2020.

21. Hostynek, J.J., R.S. Hinz, C.R. Lorence, and R.H. Guy. ''Human Skin Penetration by Metal Compounds.'' *Drugs and the Pharmaceutical Sciences,* 91:647–668, 1998.

22. M.S. Roberts and K.A. Walters, eds. ''Dermal Absorption and Toxicity Assessment,'' Marcel Dekker, Inc., New York.


## List of Subjects in 21 CFR Part 73

Color additives, Cosmetics, Drugs, Foods, Medical devices.

Therefore, under the Federal Food, Drug, and Cosmetic Act, and under authority delegated to the Commissioner of Food and Drugs, 21 CFR part 73 is amended as follows:

## PART 73—LISTING OF COLOR ADDITIVES EXEMPT FROM CERTIFICATION

■ 1. The authority citation for part 73 continues to read as follows:

**Authority:** 21 U.S.C. 321, 341, 342, 343, 348, 351, 352, 355, 361, 362, 371, 379e.

### § 73.2396 [Removed]

■ 2. Remove § 73.2396.

Dated: September 30, 2021.

**Lauren K. Roth,**

*Acting Principal Associate Commissioner for Policy.*

[FR Doc. 2021–21892 Filed 10–7–21; 8:45 am]

BILLING CODE 4164–01–P

## DEPARTMENT OF HEALTH AND HUMAN SERVICES

## Food and Drug Administration

## 21 CFR Part 878

**[Docket No. FDA–2019–N–1250]**

## General and Plastic Surgery Devices; Reclassification of Certain Surgical Staplers

**AGENCY:** Food and Drug Administration, HHS.

**ACTION:** Final amendment; final order.

**SUMMARY:** The Food and Drug Administration (FDA or the Agency) is issuing a final order to reclassify surgical staplers for internal use (formerly regulated under the classification for ''manual surgical instrument for general use'' and assigned the product code GAG) from class I (general controls) into class II (special controls) and subject to premarket review. FDA is identifying the special controls for surgical staplers for internal use that the Agency believes are necessary to provide a reasonable assurance of the safety and effectiveness of the device. FDA is issuing this reclassification on its own initiative based on new information. As part of this reclassification, FDA is also amending the existing classification for ''manual surgical instrument for general use'' to remove staplers and to create a separate classification regulation for surgical staplers that distinguishes between surgical staplers for internal use and external use.

**DATES:** This order is effective October 8, 2021.

**FOR FURTHER INFORMATION CONTACT:** George Gibeily, Center for Devices and Radiological Health, Food and Drug Administration, 10903 New Hampshire Ave., Bldg. 66, Rm. 4660, Silver Spring, MD 20993, 301–796–0276, *george.gibeily@fda.hhs.gov.*

**SUPPLEMENTARY INFORMATION:**

### I. Background

The Federal Food, Drug, and Cosmetic Act (FD&C Act), as amended, establishes a comprehensive system for the regulation of medical devices intended for human use. Section 513 of the FD&C Act (21 U.S.C. 360c) established three categories (classes) of devices, reflecting the regulatory controls needed to provide reasonable assurance of their safety and effectiveness. The three categories of devices are class I (general controls), class II (special controls), and class III (premarket approval).

Under section 513(d)(1) of the FD&C Act, devices that were in commercial distribution before the enactment of the 1976 amendments (Medical Device Amendments of 1976, Pub. L. 94–295), May 28, 1976 (generally referred to as ''preamendments devices''), are classified after FDA has: (1) Received a recommendation from a device classification panel (an FDA advisory committee); (2) published the Panel's recommendation for comment, along with a proposed regulation classifying the device; and (3) published a final regulation classifying the device. FDA has classified most preamendments devices under these procedures.

Devices that were not in commercial distribution before May 28, 1976 (generally referred to as ''postamendments devices''), are automatically classified by section 513(f)(1) of the FD&C Act into class III without any FDA rulemaking process. Those devices remain in class III and require premarket approval, unless, and until: (1) FDA reclassifies the device into class I or II or (2) FDA issues an order finding the device to be substantially equivalent, in accordance with section 513(i) of the FD&C Act, to a predicate device that does not require premarket approval. The Agency determines whether new devices are substantially equivalent to previously marketed devices by means of premarket notification procedures in section 510(k) of the FD&C Act and part 807, subpart E of the regulations (21 CFR part 807).

On July 9, 2012, Congress enacted the Food and Drug Administration Safety and Innovation Act (FDASIA) (Pub. L. 112–144). Section 608(a) of FDASIA amended section 513(e) of the FD&C Act, changing the process for reclassifying a device from rulemaking to an administrative order. Section 513(e)(1)(A)(i) of the FD&C Act sets forth the process for issuing such a final order. Specifically, prior to the issuance of an administrative order reclassifying a device, the following must occur: (1) Publication of a proposed reclassification order in the **Federal Register**, (2) a meeting of a device classification panel described in section 513(b) of the FD&C Act, and (3) consideration of comments to a public docket. The proposed reclassification order must set forth the proposed reclassification and a substantive summary of the valid scientific evidence concerning the proposed reclassification, including the public health benefits of the use of the device, and the nature and incidence (if known) of the risks of the device.

Section 513(e)(1)(A)(i) provides that FDA may, by administrative order, reclassify a device based on ''new information.'' FDA can initiate a reclassification under section 513(e) or an interested person may petition FDA. The term ''new information,'' as used in section 513(e) of the FD&C Act, includes information developed as a result of a reevaluation of the data before the Agency when the device was originally classified, as well as information not presented, not available, or not developed at that time (See, *e.g., Holland-Rantos* v. *U.S. Dep't of Health, Educ. & Welfare,* 587 F.2d 1173, 1174 n.1 (D.C. Cir. 1978); *Upjohn Co.* v. *Finch,* 422 F.2d 944 (6th Cir. 1970); *Bell* v. *Goddard,* 366 F.2d 177 (7th Cir. 1966)).

Reevaluation of the data previously before the Agency is an appropriate basis for subsequent regulatory action where the reevaluation is made in light of newly available regulatory authority (see *Bell,* 366 F.2d at 181) or in light of changes in ''medical science'' (see *Upjohn,* 422 F.2d at 951). Whether data before the Agency are old or new, the ''new information'' to support reclassification under section 513(e) of the FD&C Act must be ''valid scientific evidence,'' as defined in section 513(a)(3) of the FD&C Act and 21 CFR 860.7(c)(2) (See, *e.g., Gen. Med. Co.* v. *FDA,* 770 F.2d 214 (D.C. Cir. 1985); *Contact Lens Mfrs. Ass'n* v. *FDA,* 766 F.2d 592 (D.C. Cir. 1985), cert. denied, 474 U.S. 1062 (1986)).

FDA relies upon ''valid scientific evidence'' in the classification process to determine the level of regulation for devices. To be considered in the reclassification process, the ''valid scientific evidence'' upon which the Agency relies must be publicly available. Publicly available information

excludes trade secret and/or confidential commercial information, *e.g.,* the contents of a pending premarket approval application (see section 520(c) of the FD&C Act).

Section 510(m) of the FD&C Act provides that a class II device may be exempted from the premarket notification requirements under section 510(k) of the FD&C Act if the Agency determines that premarket notification is not necessary to assure the safety and effectiveness of the device. FDA has determined that premarket notification is necessary to reasonably assure the safety and effectiveness of surgical staplers for internal use. Therefore, the Agency has not exempted this class II device from premarket notification (510(k)) submission as provided under section 510(m) of the FD&C Act.

On April 24, 2019 (84 FR 17116), FDA published a proposed order in the **Federal Register** to reclassify surgical staplers for internal use (the proposed order). FDA also proposed special controls and proposed amending the existing classification for ''manual surgical instrument for general use'' to remove staplers and to create a separate classification regulation for surgical staplers that distinguishes between surgical staplers for internal use and external use. The period for public comment on the proposed order closed on June 24, 2019. FDA received and has considered comments on the proposed order, as discussed in section III. FDA also held a meeting of the General and Plastic Surgery Devices Advisory Panel (the Panel) on May 30–31, 2019, in accordance with section 513(b) of the FD&C Act (21 U.S.C. 360c(b)) (Ref. 1). In publishing the proposed order, holding the Panel meeting, and considering comments to the docket, FDA has met the requirements for reclassification under section 513(e)(1)(A)(i) of the FD&C Act.

## II. Panel Meeting

### *A. Panel Feedback*

On May 30, 2019, the Panel met to discuss and make recommendations regarding the reclassification of surgical staplers for internal use from class I (general controls) to class II (special controls) (Ref. 1). At the Panel meeting, FDA presented the risks, mitigations, and special controls identified in the proposed order.

The Panel generally agreed that the list of risks and proposed mitigations proposed by FDA was accurate and agreed with FDA that the risk profile was consistent with class II devices. Some Panel members noted that adverse tissue reaction may not be a particular risk due to the minimal patient contact duration with body tissues. Some Panel members also stated that ''increased risk of cancer recurrence'' should be removed from the list of risks, and no Panel members disagreed with that position.

The Panel generally agreed that FDA's proposed special controls are reasonable and sufficient to support reclassification of surgical staplers for internal use to class II. Some members noted that biocompatibility testing may not be needed as a special control due to the limited contact duration with tissues.

The Panel also believed that usability testing should be required, but recommended revision of the term ''labeling comprehension study'' in the special controls, since the Panel felt that the study should focus on evaluation of the labeling rather than on the user. Some Panel members felt that certain warnings in the labeling special controls, such as ''establishing and maintaining proximal control of blood vessels prior to stapling'' and ''avoidance of use of the stapler on large blood vessels,'' should be removed, as they believed the labeling should allow the surgeon to exercise their own clinical judgement rather than dictating surgical practice. One Panel member additionally implied that the term ''large blood vessels'' is vague.

Some Panel members believed that a registry could be helpful as part of the special controls, but there was a divergence of opinion on the need for a registry as part of device reclassification and the ultimate utility of the data that would likely be collected.

The Panel also discussed unique sterility considerations regarding powered staplers. The Panel also discussed additional special controls that they believed were necessary for powered surgical staplers such as electrical safety and electromagnetic compatibility testing and software verification and validation. The Panel expressed the view that powered staplers should meet these requirements.

Based upon the available scientific evidence and risks to health posed by surgical staplers for internal use, the Panel unanimously recommended the reclassification of surgical staplers for internal use from class I (general controls) to class II (special controls), agreeing with FDA's conclusion that general controls by themselves were insufficient to provide reasonable assurance of safety and effectiveness.

### *B. FDA Response to Panel Feedback and Changes in the Final Order*

The Panel agreed with FDA in recommending the reclassification of surgical staplers for internal use from class I (general controls) to class II (special controls). The Panel generally agreed with the risks to health identified by FDA and the applicable special controls associated with the identified risks. FDA's responses to the recommendations are detailed in this section. As discussed in detail in sections III and IV below, FDA also considered comments from industry, professional societies, and stakeholders in developing the special controls in this final order. However, here in section II, we specifically address the Panel recommendations and FDA's response.

#### 1. Risks

The Panel recommended removing increased risk of cancer recurrence and adverse tissue reaction from the risks to health presented at the Panel meeting. While surgical stapler malfunctions have resulted in complications such as anastomotic leaks, which have been associated with an increased risk of cancer recurrence, FDA agrees that there is limited evidence directly linking surgical stapler failure or malfunction with an increased risk of cancer recurrence (Refs. 2- 4). Therefore, due to the limited evidence directly linking surgical stapler failure or malfunction with an increased risk of cancer recurrence, FDA agrees with removing increased risk of cancer recurrence from the list of complications associated with device failure/malfunction. FDA does not agree that adverse tissue reaction should be removed as a risk to health, as staplers for internal use contain patient-contacting materials that contact internal tissues, and these patient-contacting device materials may pose a risk of adverse tissue reaction if not adequately demonstrated to be biocompatible. The demonstration of biocompatibility for these devices is consistent with our approach for other devices with similar type and duration of contact; therefore, FDA has not removed the applicable special control regarding biocompatibility (Ref. 5).

The Panel had specifically been asked to consider additional risks posed by powered staplers that were not identified in the proposed order. The Panel noted that the risks associated with sterility are different for non-powered staplers, which are generally packaged sterile, and powered staplers, part of which must be reprocessed.

2. Special Controls

The Panel discussed and provided recommendations regarding the biocompatibility, labeling comprehension study, labeling, and sterility special controls identified in the proposed order. The Panel also discussed the possible addition of special controls regarding use of registries and powered staplers.

As discussed above in section II.B.1., FDA has not removed the special control regarding biocompatibility since surgical staplers for internal use contain patient-contacting device materials that may pose a risk of adverse tissue reaction if not adequately demonstrated to be biocompatible.

FDA acknowledges and agrees with the Panel's recommendation that ''labeling comprehension'' testing should focus on evaluation of the clarity of the labeling rather than on the user's comprehension of the labeling. In response to the Panel's recommendation to revise the term ''labeling comprehension study'' in the special controls, FDA notes that the term ''labeling comprehension study'' is commonly used when referring to a study assessing the extent to which the labeling conveys the intended message to the user, such that the user can understand and apply this information when making decisions regarding device selection and use. However, a labeling comprehension study may not be the only way to assess how well the labeling results in use of the device as intended, therefore we are revising this special control to use the term ''human factors testing'' in place of ''usability testing and labeling comprehension study.'' FDA continues to find that such human factors testing is necessary to mitigate the risk of complications associated with use error or improper device selection and use specifically related to device labeling.

Based, in part, on feedback from the Panel that the labeling should allow surgeons to exercise their own clinical judgement, FDA has made several edits to the labeling special controls. FDA has revised the warning regarding ''establishing and maintaining proximal control of blood vessels'' to state ''establishing proximal control of blood vessels prior to stapling where practical'' and to also include ''methods of blood vessel control in the event of stapler failure.'' FDA has revised the warning regarding ''avoidance of use of the stapler on large blood vessels, such as the aorta'' to state ''avoidance of use of the stapler on the aorta.'' FDA has also removed the requirement to include specific user instructions for evaluation of the resultant staple line from the labeling special controls.

While the Panel had a distinct discussion on the possible addition of registries as a special control, use of registries was not added as a special control due in part to the divergence of the Panel's opinion on the necessity for a registry as part of device reclassification. While FDA acknowledges that use of registries may be helpful in understanding the performance of these devices, FDA determines that mandating the use of registries is not needed to provide a reasonable assurance of the safety and effectiveness of surgical staplers for internal use.

Finally, the Panel did not disagree with FDA's request to consider the inclusion of specific special controls for powered surgical staplers for internal use. Special controls regarding electrical safety, electromagnetic compatibility, software verification, validation, and hazard analysis for powered staplers have been added accordingly. While FDA acknowledges that powered staplers may have unique sterility considerations as discussed by the Panel, FDA notes that all surgical staplers, both manual and powered, must be demonstrated to be sterile. Therefore, the special control regarding sterility (''Performance data must demonstrate the sterility of the device'') remains unchanged.

## III. Comments on the Proposed Order and FDA Response to Comments

### *A. Introduction*

In response to the April 24, 2019, proposed order (84 FR 17116), FDA received seven sets of comments to the docket for the proposed order (FDA–2019–N–1250), some of which contain one or more comments on more than one issue. In addition, FDA received two sets of public comments to the docket for FDA's draft guidance, ''Surgical Staplers and Staples for Internal Use—Labeling Recommendations'' (FDA–2019–D–1262) that contained one or more comments regarding the proposed order. Collectively, these comments originated from individual consumers, academia, healthcare professionals, healthcare associations, and industry. All commenters support the proposed reclassification of surgical staplers for internal use, and a few expressed concerns regarding specific special controls, which we address in section B. below.

Additionally, FDA received some comments to the docket for the proposed order that are regarding FDA's ''Draft Surgical Staplers and Staples for Internal Use—Labeling Recommendations'' guidance. Elsewhere in this issue of the **Federal Register**, FDA is publishing a notice of availability for the final ''Surgical Staplers and Staples for Internal Use—Labeling Recommendations'' guidance. These comments were considered in the finalization of this guidance. As discussed below, FDA intends for the ''Surgical Staplers and Staples for Internal Use—Labeling Recommendations'' guidance to provide recommendations to help manufacturers comply with the labeling special controls. As such, FDA has utilized the ''Surgical Staplers and Staples for Internal Use—Labeling Recommendations'' guidance to provide additional clarification, where appropriate.

The order of response to the commenters is purely for organizational purposes and does not signify the comment's value or importance nor the order in which comments were received. Certain comments are grouped together under a single number because the subject matter is similar.

### *B. Description of Comments and FDA Response*

(Comment 1) Some commenters shared their own personal experiences with surgical staplers for internal use, such as adverse events experienced during surgeries, types of malfunctions encountered with surgical staplers, or best practices taken to help ensure safety of surgical staplers. One of these commenters encouraged FDA to put into effect whatever additional safety measures it sees fit to make surgical staplers for internal use safer.

(Response 1) FDA notes that, as discussed in the proposed order, malfunctions and misuse associated with surgical staplers for internal use have resulted in serious adverse events, including deaths. FDA determines that reclassifying surgical staplers for internal use from class I to class II, establishing special controls, and requiring premarket review will help ensure a reasonable assurance of safety and effectiveness for these devices.

(Comment 2) One commenter requested that FDA consider establishing requirements to make public announcements about large scale problems with medical devices.

(Response 2) Requiring public announcements about large scale problems with medical devices falls outside the scope of FDA's reclassification of surgical staplers for internal use described in this final order. Nonetheless, FDA routinely posts

Medical Device Safety Communications to describe FDA's analysis of a current issue or problem and provide specific regulatory approaches and clinical recommendations for patient management. FDA's publicly available Medical Device Reporting Database includes information on devices that may have malfunctioned or caused a death or serious injury. Likewise, FDA's publicly available Medical Device Recalls database provides information on medical device recalls. In addition, FDA posts consumer information about Class I and some Class II and III recalls on its website in order to ensure that patients are aware of the seriousness of the potential health hazard posed by exposure to the product.

(Comment 3) Some commenters discussed the benefits of surgical staplers for internal use, such as decreasing operative time, reducing surgical variability, and enabling more complex surgical procedures. Some commenters stated that the risks of the device need to be considered against these benefits, and that the number of adverse events need to be considered in the context of the large number of surgical procedures performed using these devices.

(Response 3) FDA agrees that surgical staplers for internal use offer many important benefits, and that the risks of these devices need to be considered against their benefits. As described in the proposed order, FDA set forth the proposed reclassification and a substantive summary of the valid scientific evidence, including the public health benefits of the use of the device, and the nature and incidence of the risks of the device. Based on our analysis of the benefits and risks posed by surgical staplers for internal use, FDA determines that general controls on their own are insufficient to provide reasonable assurance of safety and effectiveness. The special controls identified in this final order, together with general controls, are necessary to provide a reasonable assurance of safety and effectiveness for surgical staplers for internal use, and as such, class II is the more appropriate classification for these devices.

(Comment 4) Similar to the Panel's feedback, some commenters felt that increased risk of cancer recurrence should be removed from the list of risks to health due to lack of evidence associating surgical staplers for internal use with an increased risk of cancer recurrence.

(Response 4) As discussed above, in section II. B., while surgical stapler malfunctions have resulted in complications such as anastomotic leaks, and anastomotic leaks have been associated with an increased risk of cancer recurrence, FDA agrees that there is limited evidence directly linking surgical stapler failure/malfunction with an increased risk of cancer recurrence (Refs. 2–4). Therefore, FDA agrees with removing increased risk of cancer recurrence from the list of complications associated with device failure/malfunction in the risks to health.

(Comment 5) Similar to the Panel's feedback, some commenters felt that adverse tissue reaction should be removed as a risk to health associated with surgical staplers for internal use, as the stapler only has incidental contact with the patient.

(Response 5) As discussed above, in section II.B., FDA does not agree that adverse tissue reaction should be removed as a risk to health, as staplers for internal use contain patient-contacting materials that contact internal tissues, and these patient-contacting device materials may pose a risk of adverse tissue reaction if not adequately demonstrated to be biocompatible. The demonstration of biocompatibility for these devices is consistent with our approach for other devices with similar type and duration of contact, therefore the associated special control has also been maintained (Ref. 5).

(Comment 6) Some commenters requested that FDA work collaboratively with industry and professional societies to develop the special controls (*e.g.,* specific language for warnings) and to develop a uniform color coding system for all stapler reloads.

(Response 6) FDA has considered extensive comments from industry, professional societies, and other stakeholders in developing the special controls in this final order. While color coding is helpful and FDA would support development of a uniform color coding system if it came from a consensus body, FDA believes that the special controls in this final order, together with general controls, are sufficient to provide a reasonable assurance of safety and effectiveness for surgical staplers for internal use.

(Comment 7) One commenter stated that the special controls for surgical staplers for internal use should be established in accordance with least burdensome principles.

(Response 7) As stated in FDA's guidance, ''The Least Burdensome Provisions: Concepts and Principles,'' FDA defines ''least burdensome'' to be the minimum amount of information necessary to adequately address a relevant regulatory question or issue through the most efficient manner at the right time (Ref. 6). FDA used the least burdensome approach in weighing the risks of surgical staplers for internal use with their benefits. FDA finds that the special controls identified in this final order represent the minimum amount of information necessary to provide a reasonable assurance of the safety and effectiveness of these devices.

(Comment 8) One commenter felt that the proposed performance testing special controls represented a reasonable approach for evaluating the safety and effectiveness of surgical staplers for internal use, but that greater specifics regarding the standards, methods, and relevance of the proposed testing controls are needed to fully evaluate the proposed special controls.

(Response 8) FDA agrees that the performance testing special controls identified in this final order are necessary to provide a reasonable assurance of the safety and effectiveness for these devices. FDA notes that the performance testing special controls are stated broadly to allow flexibility in different approaches in complying with the special controls.

(Comment 9) Some commenters noted that firing force is an important parameter for manual surgical staplers for internal use, but is not applicable to powered surgical stapler devices.

(Response 9) FDA agrees that firing force is an important parameter applicable to manual surgical staplers for internal use and is not applicable to powered surgical staplers. Therefore, FDA has revised the performance testing special controls to include measurement of the worst-case deployment pressures on stapler firing force specifically for manual staplers.

(Comment 10) Similar to the Panel's feedback, some commenters noted the importance of ensuring that the product labeling and instructions for use do not interfere with clinical decision making and a physician's ability to exercise his or her professional judgement. The commenters noted that too much information in the product labeling can make the labeling difficult to read, reducing its value to physicians, and provided a general recommendation to make the labeling special controls less prescriptive.

(Response 10) As discussed above, in section II, regarding the Panel's discussion of the proposed special control for a labeling comprehension study, FDA acknowledges the concern that too much information in the product labeling can make the labeling difficult to read, and that it is important for the labeling to be clear for the user. However, FDA also notes that, as

discussed in the proposed order, there have been a large number of adverse events associated with use of both surgical staplers and staples for internal use; both device misuse and device malfunctions are root causes of these adverse events. Therefore, FDA finds it is essential to communicate specific information about the risks, limitations, and directions for use in the labeling for surgical staplers and staples for internal use to lower the risk of occurrence of these adverse events and to promote safe and effective use of these devices.

As discussed separately in the responses to the comments below in section IV, FDA has chosen to remove or revise certain labeling special controls in an effort to allow for physician discretion as discussed with the Panel, but we continue to conclude that other labeling special controls are necessary to provide a reasonable assurance of the safety and effectiveness of these devices.

(Comment 11) Some commenters felt that the contraindication that the device should not be used to staple tissues that are necrotic, friable, or have altered integrity should be removed from the stapler labeling as it extends into the realm of surgical practice and involves the application of medical judgement that should be left to trained surgeons.

(Response 11) FDA disagrees that the contraindication regarding stapling of tissues that are necrotic, friable, or have altered integrity should be removed from the labeling. FDA notes that application of staples to tissues that are necrotic, friable, or have altered integrity has resulted in complications such as, but not limited to, tissue damage, anastomotic leakage, bleeding, abscess, sepsis, peritonitis, and hemorrhage. To FDA's knowledge, there is no known benefit of applying surgical staples to tissues that are necrotic, friable, or have altered integrity. Therefore, FDA determines that the risk of stapling tissues that are necrotic, friable, or have altered integrity outweighs any reasonably foreseeable benefit due to known complications. FDA finds that this contraindication is necessary to mitigate the risks of complications associated with improper device use and to provide a reasonable assurance of the safety and effectiveness of these devices.

(Comment 12) One commenter felt that the warning to visually inspect for inclusion of unintended anatomic structures within the staple line should be removed from the stapler labeling as it extends into the realm of surgical practice and involves the application of medical judgement that should be left to trained surgeons.

(Response 12) FDA disagrees that the warning regarding avoidance of obstructions to the creation of the staple line and the unintended stapling of other anatomic structures should be removed from the labeling. As noted in the proposed order, obstructions to the creation of the staple line and unintended stapling of anatomic structures have been associated with known hazards. For example, FDA has received medical device reports where obstructions to the staple line and/or unintended stapling of anatomic structures have resulted in anastomotic leaks and other injuries. Therefore, FDA finds that this warning is necessary to mitigate the risks of complications associated with improper device use and to provide a reasonable assurance of the safety and effectiveness of these devices.

(Comment 13) Similar to the Panel discussion, some commenters felt that the warning to establish and maintain adequate proximal control of blood vessels prior to stapling should be removed from the stapler labeling as it extends into the realm of surgical practice and involves the application of medical judgement that should be left to trained surgeons.

(Response 13) FDA disagrees that the warning to establish and maintain adequate proximal control of blood vessels prior to stapling should be removed entirely, as it is important to have methods of blood vessel control in place in the event of stapler failure to prevent the risk of uncontrolled bleeding. However, FDA acknowledges there are situations where it may not be practical to establish proximal control of blood vessels prior to stapling. Therefore, FDA has revised the labeling special control to include a warning regarding the establishment of proximal control of blood vessels prior to stapling ''where practical'' and establishment of ''methods of blood vessel control in place in the event of stapler failure.'' FDA finds that this warning is necessary to mitigate the risks of complications associated with improper device use and to provide a reasonable assurance of the safety and effectiveness of these devices.

(Comment 14) One commenter felt that the warning that clamping and unclamping of delicate tissue structures, such as venous structures and bile ducts, may result in damage to tissue irrespective of stapler firing, should be removed from the stapler labeling as it extends into the realm of surgical practice and involves the application of medical judgement that should be left to trained surgeons.

(Response 14) FDA disagrees that the warning regarding avoidance of clamping and unclamping of delicate tissue structures should be removed from the labeling. As discussed in the proposed order, clamping and unclamping of delicate tissue structures have been associated with known hazards such as tissue damage. For example, FDA has received medical device reports where clamping of the stapler has resulted in tissue damage or bleeding. As also noted in FDA's Letter to Health Care Providers, ''Safe Use of Surgical Staplers and Staples,'' clamping of staplers on delicate tissue can cause injury even if no staples are fired (Ref. 7). Therefore, FDA finds that this warning is necessary to mitigate the risks of complications associated with improper device use and to provide a reasonable assurance of the safety and effectiveness of these devices.

(Comment 15) Some commenters felt that the warning regarding measures to take if a stapler malfunction occurs while applying staples across a blood vessel, including clamping or ligating the vessel before releasing the stapler, while the stapler is still closed on the tissue, should be removed from the stapler labeling as it extends into the realm of surgical practice and involves the application of medical judgement that should be left to trained surgeons.

(Response 15) FDA agrees that the warning regarding ''clamping or ligating the vessel before releasing the stapler, while the stapler is still closed on the tissue'' may be too prescriptive and has removed this from the labeling special controls. Nonetheless, FDA continues to find that it is important to have methods of blood vessel control in place in the event of stapler failure in order to prevent the risk of uncontrolled bleeding. Therefore, FDA has modified the remainder of the labeling special controls to add a warning regarding methods of blood vessel control in the event of stapler failure. FDA finds that this warning is necessary to mitigate the risks of complications associated with improper device use and to provide a reasonable assurance of the safety and effectiveness of these devices.

(Comment 16) Consistent with the Panel discussion, commenters requested revision or removal of the warning regarding ''avoidance of use of the stapler on large blood vessels, such as the aorta.'' Some commenters felt that the term ''large blood vessels'' is vague and recommended revising the statement to warn specifically against stapling the aorta. Some commenters noted that many surgical staplers are contraindicated for use on the aorta and felt that this statement should only be

included as a warning if it is not already included as a contraindication. Other commenters felt that this statement should be removed from the labeling, since it extends into the realm of surgical practice and involves the application of a surgeon's medical judgement.

(Response 16) FDA agrees that use of the term ''large blood vessels'' may be subject to interpretation and has revised the special control to remove ''avoidance of use of the stapler on large blood vessels'' to leave more room for surgeon judgement, which FDA believes is appropriate here. Nonetheless, FDA has retained the warning regarding ''avoidance of use of the stapler on the aorta.'' As discussed at the Panel meeting, FDA has received several medical device reports where stapling the aorta has resulted in serious adverse events, such as significant blood loss. Based on a benefit risk analysis, as well as information received from medical device reports, FDA finds that the risk of stapling the aorta outweighs the risk of stapling other large blood vessels. Therefore, FDA finds that a warning regarding avoidance of use of the stapler on the aorta is necessary to mitigate risks of complications associated with improper device use and to ensure a reasonable assurance of safety and effectiveness of these devices.

(Comment 17) One commenter noted that premarket testing for staple line integrity provides important information for assessing the safety and effectiveness of surgical staplers. Nonetheless, some commenters felt that the procedures for evaluating staple line integrity should not be included in the directions for use, as these procedures extend into the realm of surgical practice and may differ depending on different circumstances (*e.g.,* patient conditions, tissue types, surgeon's training and experience).

(Response 17) FDA agrees that premarket testing for staple line integrity provides important information for assessing the safety and effectiveness of surgical staplers for internal use. Therefore, confirmation of staple line integrity remains as a performance testing special control. FDA acknowledges that procedures for evaluating staple line integrity may differ depending on different circumstances. Therefore, FDA has removed the requirement to include specific user instructions for evaluation of the resultant staple line from the labeling special controls.

(Comment 18) One commenter felt that the warning to ensure stapler compatibility with staples is unnecessary, since the labeling of the device must include a list of staples with which the stapler has been demonstrated to be compatible.

(Response 18) Even with a list of compatible staples present in the labeling, it is possible that a user may still try to use the stapler with an incompatible staple if a warning to ensure stapler compatibility with staples is not present. Therefore, consistent with the proposed order, FDA continues to find that the warning to ensure stapler compatibility with staples is necessary to mitigate the risk of complications associated with improper device use and to ensure a reasonable assurance of safety and effectiveness of these devices.

(Comment 19) One commenter felt that the warning to ensure avoidance of obstructions to the creation of the staple line should not be included in the labeling, since clinical circumstances exist in which it may be necessary or appropriate to staple across an obstruction, *e.g.,* a prior staple line.

(Response 19) As noted in response 12 above, stapling across obstructions have been associated with risks such as anastomotic leaks and other injuries. While FDA acknowledges there may be clinical circumstances when a surgeon may deem it necessary or appropriate to cross staple lines, FDA notes that additional types of obstructions beyond prior staple lines exist (*e.g.,* clips, ligatures, drainage tubes), and that such obstructions should be avoided due to the associated risks. Therefore, FDA finds that the warning to ensure avoidance of obstructions to the creation of the staple line should be included in the labeling to mitigate the risk of complications associated with improper device use and to ensure a reasonable assurance of safety and effectiveness of these devices. As noted below, FDA has additionally revised the special controls to include a labeling requirement for a warning regarding risks of crossing staple lines in response to a comment recommending the addition of such a warning in the docket for FDA's draft guidance, ''Surgical Staplers and Staples for Internal Use—Labeling Recommendations'' (FDA–2019–D–1262).

(Comment 20) One commenter noted that premarket testing for staple line strength provides important information for assessing the safety and effectiveness of surgical staplers. Nonetheless, some commenters noted that there are no standardized test methods for evaluating staple line strength (*e.g.,* burst strength). These commenters felt that staple line strength (*e.g.,* burst strength) should not be included in the device labeling until standardized testing methodology is developed.

(Response 20) FDA agrees that premarket testing for staple line strength provides important information for assessing the safety and effectiveness of surgical staplers for internal use. Therefore, measurement of staple line strength remains as a performance testing special control.

For the reasons discussed in the proposed order, FDA finds that the labeling must include identification of key performance parameters and technical characteristics of the stapler and compatible staples needed for safe use of the device. The commenters' recommendations regarding removing staple line strength from product labeling due to lack of standardized methodology were considered in the finalization of FDA's ''Surgical Staplers and Staples for Internal Use—Labeling Recommendations'' guidance, which provides FDA's recommendations regarding key performance parameters and technical characteristics that should be included in the labeling for surgical staplers. At this time, due to the lack of standardized testing methodology for evaluating staple line strength, FDA revised the final guidance to remove staple line strength from the list of recommendations for labeling of key technical characteristics and performance parameters.

(Comment 21) One commenter noted that premarket testing for staple formation provides important information for assessing the safety and effectiveness of surgical staplers. Nonetheless, some commenters noted that there are no standardized test methods for evaluating the percentage of properly formed staples at the maximum and minimum tissue thickness. These commenters felt that percentage of properly formed staples at the maximum and minimum tissue thickness should not be included in the device labeling until standardized testing methodology is developed.

(Response 21) FDA agrees that premarket testing for staple formation provides important information for assessing the safety and effectiveness of surgical staplers for internal use. Therefore, evaluation of staple formation characteristics in the maximum and minimum tissue thicknesses for each staple type remains as a performance testing special control.

In addition, FDA finds that the labeling must include identification of key performance parameters and technical characteristics of the stapler and compatible staples needed for safe use of the device. FDA's ''Surgical Staplers and Staples for Internal Use—

Labeling Recommendations'' Guidance provides FDA's recommendations regarding key performance parameters and technical characteristics to include in the labeling for surgical staplers. The commenters' recommendations regarding percentage of properly formed staples were considered in the finalization of the guidance. Specifically, ''percentage of properly formed staples at the maximum and minimum tissue thickness'' was removed from the list of recommended key performance parameters and technical characteristics due to the lack of standardized test methodology for evaluating these parameters.

(Comment 22) One commenter asked FDA to clarify what is meant by ''safety mechanisms'' for surgical staplers for internal use.

(Response 22) FDA has provided examples and clarification for what is meant by ''safety mechanisms'' for surgical staplers for internal use in FDA's ''Surgical Staplers and Staples for Internal Use—Labeling Recommendations'' guidance. Specifically, the final guidance states that safety mechanisms include ''*e.g.,* identification of whether a stapler has built-in methods for assessing and/or limiting operation when the underlying tissues are outside of a predefined range.'' ''Lock-out'' and ''color firing zone'' are two examples of safety mechanisms for surgical staplers for internal use provided in the guidance.

(Comment 23) One commenter asked FDA to revise the labeling special control regarding inclusion of specific user instructions for ''evaluation of the appropriateness of the target tissue for stapling'' to include examples of procedures that may be used for determining that a tissue is appropriate for stapling, and to provide clarification for the types of target tissue. Another commenter requested that FDA remove this special control altogether, as it extends into the realm of surgical practice and involves the application of medical judgement that should be left to trained surgeons.

(Response 23) FDA does not agree that this special control should be removed, as FDA believes instructions for ''evaluation of the appropriateness of the target tissue for stapling'' are important to include within specific user instructions to reduce the risk of complications associated with improper device use. FDA has not included examples of procedures that may be used for determining that a tissue is appropriate for stapling or examples of types of tissue, since the examples of procedures and tissue types may vary depending on the design and intended use the stapler. Instead, manufacturers should identify appropriate procedures and tissue types based on the design and intended use of their own specific stapler.

(Comment 24) Some commenters requested that FDA clarify expectations for the evaluation of marketed surgical stapler products that were previously cleared. Some commenters felt that the special controls should not be retroactively applied to devices that already have been 510(k) cleared and have an established safety profile. Other commenters felt that FDA should evaluate previously cleared devices to determine if the devices and information contained in the previously cleared submissions meet the new special controls.

(Response 24) FDA finds that all surgical staplers for internal use, including previously cleared devices and new devices, must comply with the special controls identified in this final order to ensure a reasonable assurance of safety and effectiveness for these devices. Manufacturers should refer to section V (Implementation Strategy) of this final order for information on dates when FDA intends to enforce compliance with the final order. It is the manufacturer's responsibility to ensure compliance with applicable laws and regulations administered by FDA. Manufacturers should refer to FDA's guidance, ''Deciding When to Submit a 510(k) for a Change to an Existing Device'' (Ref. 8) to determine whether a new 510(k) is required for changes to an existing device.

## IV. Changes in the Final Order

FDA is adopting the majority of our findings under section 513(e) of the FD&C Act, as published in the preamble to the proposed order (84 FR 17116). For the reasons described previously in sections II and III, FDA has made revisions in this final order in response to feedback from the Panel and comments regarding the proposed order that were submitted to public dockets.

Based, in part, on the Panel feedback and comments to the proposed reclassification order, FDA is issuing the following revised list of risks and Risks to Health and Risk Mitigation Table (table 1). The list reflects the addition of risks specific to powered staplers and the removal of ''increased risk of cancer recurrence'' as a risk:

- *Complications associated with device failure/malfunction.* Device failures or malfunctions may result in prolonged surgical procedures, unplanned surgical interventions, and other complications such as bleeding, sepsis, fistula formation, tearing of internal tissues and organs, and death. Additionally, for powered staplers, faulty hardware or software may cause electrical hazards or electromagnetic interference with other devices, such as the risk of interference with operating monitors, misfiring or locking of the stapler.
- *Complications associated with use error/improper device selection and use.* Use error may result from a device design that is difficult to operate and/or labeling that is difficult to comprehend. For example, user difficulty in firing the stapler may result in staples not being fully deployed, and misfiring may result in staples being inadvertently applied to the wrong tissue. Inadequate instructions for use may result in selection of incorrectly sized staples for the target tissue. When staples are applied to the wrong tissue or when incorrectly sized staples are applied, staples are unable to properly approximate the underlying tissue, resulting in tissue damage, anastomotic leakage, and bleeding. This in turn, may lead to more severe complications, such as abscess, sepsis, peritonitis, hemorrhage, or death.
- *Adverse tissue reaction.* If the patient-contacting materials of the device are not biocompatible, local tissue irritation and sensitization, cytotoxicity, or systemic toxicity may occur when the device contacts sterile tissue.
- *Infection.* If the device is not adequately reprocessed or sterilized, the device may introduce pathogenic organisms into sterile tissue and may cause an infection in a patient.

TABLE 1—RISKS TO HEALTH AND MITIGATION MEASURES FOR SURGICAL STAPLERS FOR INTERNAL USE

| Identified risks to health | Mitigation measures |
|---|---|
| Complications associated with device failure/malfunction | Performance testing; Labeling; and for powered staplers only: Electrical, thermal, and mechanical safety testing; Electromagnetic compatibility testing; Software validation, verification, and hazard analysis. |

TABLE 1—RISKS TO HEALTH AND MITIGATION MEASURES FOR SURGICAL STAPLERS FOR INTERNAL USE—Continued

| Identified risks to health | Mitigation measures |
|---|---|
| Complications associated with use error/improper device selection and use. | Human Factors testing and Labeling. |
| Adverse Tissue Reaction | Biocompatibility evaluation. |
| Infection | Labeling, Sterility testing, and Shelf-Life Testing. |

FDA modified the special controls to provide additional specificity regarding manual and powered staplers, where appropriate. Specifically, FDA modified the performance testing special controls to include clarification that measurement of worst-case deployment pressures on stapler firing force is applicable only to manual staplers (see § 878.4740(b)(2)(i)(B)). FDA added special controls for powered staplers regarding electrical safety, electromagnetic compatibility, software verification, validation, and hazard analysis (see § 878.4740(b)(2)(ii) and (b)(2)(iii)).

FDA also modified the special controls to refine certain labeling requirements. Specifically, FDA modified the requirement for a warning regarding ''establishing and maintaining proximal control of blood vessels prior to stapling'' to ''Establishing proximal control of blood vessels prior to stapling where practical'' (see § 878.4740(b)(2)(ix)(B)(*v*)). FDA replaced the requirement for a warning regarding ''appropriate measures to take if a stapler malfunction occurs while applying staples across a blood vessel, such as clamping or ligating the vessel before releasing the stapler, while the stapler is still closed on the tissue'' with the requirement for a warning regarding ''methods of blood vessel control in the event of stapler failure.'' (see § 878.4740(b)(2)(ix)(B)(*v*)). These edits were made for the reasons described above, including feedback from the Panel and commenters regarding instances where labeling should provide flexibility for a physician to exercise his or her professional judgement. FDA modified the requirement for a warning regarding ''avoidance of use of the stapler on large blood vessels, such as the aorta'' to a warning regarding ''avoidance of use of the stapler on the aorta'' (see § 878.4740(b)(2)(ix)(B)(i*v*)) in response to comments that use of the term ''large blood vessels'' is vague. FDA has also revised the special controls to remove the requirement for specific user instructions associated with ''evaluation of the resultant staple line'' (see § 878.4740(b)(2)(ix)(C)) in response to comments that procedures for evaluating staple line integrity may differ depending on different circumstances.

Elsewhere in this issue of the **Federal Register**, FDA is publishing a notice of availability for the final guidance, ''Surgical Staplers and Staples for Internal Use—Labeling Recommendations.'' FDA made additional revisions in this final order to reflect changes made during finalization of the guidance based on the feedback specifically on that document to the guidance docket. Specifically, FDA revised the special controls to include a labeling requirement for a warning regarding the risks of crossing staple lines (see § 878.4740(b)(2)(ix)(B)(*vii*)) in response to a comment recommending the addition of such a warning to the guidance. FDA notes that a risk of increased leak rates when staple lines are crossed has been commonly reported in the medical literature (Refs. 9 and 10). Therefore, FDA finds that this warning is necessary to mitigate the risks of complications associated with improper device use and to provide a reasonable assurance of the safety and effectiveness of these devices.

In response to a comment recommending removal of the contraindication for stapling of ''tissues outside the labeled limits of tissue thickness'' from the guidance, FDA revised the special controls to change this contraindication to a warning (see § 878.4740(b)(2)(ix)(B)(*i*)). FDA has changed the contraindication regarding stapling ''tissues outside the labeled limits for maximum and minimum tissue thickness'' to a warning instead of a contraindication so as not to impinge on surgeon judgement and since there is currently no standardized mechanism to accurately measure tissue thickness intraoperatively. Nonetheless, FDA notes that stapling of tissues outside labeled limits has been associated with serious adverse events, such as anastomotic leakage and bleeding, in medical device reports. Therefore, FDA finds that a warning regarding stapling tissues outside labeled limits is necessary to mitigate the risks of complications associated with improper device use and to provide a reasonable assurance of the safety and effectiveness of these devices.

FDA also modified the contraindication regarding ''stapling of necrotic or ischemic tissues'' to ''stapling of tissues that are necrotic, friable, or have altered integrity'' to promote consistency with the language used in the guidance (see § 878.4740(b)(2)(ix)(A)). FDA notes that ''necrotic or ischemic tissues'' are a subset of ''tissues that are necrotic, friable, or have altered integrity.'' As explained above, FDA has determined that the risk of stapling tissues that are necrotic, friable, or have altered integrity outweighs any reasonably foreseeable benefit due to known complications.

FDA is issuing this final order revising § 878.4800 by removing the classification of surgical staplers and codifying surgical staplers in the new 21 CFR 878.4740, under which surgical staplers for internal use is classified into class II with special controls and surgical staplers for external use remain in class I, exempt from premarket notification. In this final order, we have identified the special controls under section 513(a)(1)(B) of the FD&C Act that, together with general controls, provide a reasonable assurance of the safety and effectiveness for surgical staplers for internal use.[1]

FDA may exempt a class II device from the premarket notification requirements, under section 510(m) of the FD&C Act, if FDA determines that premarket notification is not necessary to provide reasonable assurance of the safety and effectiveness of the devices. FDA has determined that premarket notification is necessary to provide reasonable assurance of safety and effectiveness of surgical staplers for internal use, and therefore, this device type is not exempt from premarket notification requirements.

The device is assigned the generic name surgical stapler for internal use,

[1] FDA notes that the ''ACTION'' caption for this final order is styled as ''Final amendment; final order,'' rather than ''Final order.'' Beginning in December 2019, this editorial change was made to indicate that the document ''amends'' the Code of Federal Regulations. The change was made in accordance with the Office of Federal Register's (OFR) interpretations of the Federal Register Act (44 U.S.C. chapter 15), its implementing regulations (1 CFR 5.9 and parts 21 and 22), and the Document Drafting Handbook.

and it is identified as a specialized prescription device used to deliver compatible staples to internal tissues during surgery for resection, transection, and creating anastomoses.

## V. Implementation Strategy

The order is effective on its date of publication in the **Federal Register**.

- Surgical staplers for internal use that have not been offered for sale prior to the effective date of the final order or have been offered for sale but are required to submit a new 510(k) under 21 CFR 807.81(a)(3): Manufacturers would have to obtain 510(k) clearance before marketing their devices after the effective date of the order. If a manufacturer markets such a device without receiving 510(k) clearance, then FDA would consider taking action against such a manufacturer under its usual enforcement authorities and policies.
- Surgical staplers for internal use that have been offered for sale prior to the effective date of the final order and do not already have 510(k) clearance: FDA does not intend to enforce compliance with the 510(k) requirement or special controls until 180 days after the effective date of the final order. After that date, if a manufacturer continues to market such a device but does not have 510(k) clearance or FDA determines that the device is not substantially equivalent or not compliant with special controls, then FDA would consider taking action against such manufacturer under its usual enforcement authorities and policies.

For surgical staplers for internal use that have prior 510(k) clearance, FDA would accept a new 510(k) and would issue a new clearance letter, as appropriate, indicating substantial equivalence and special controls compliance. These devices could serve as predicates for new devices. These clearance letters would be made publicly available in FDA's 510(k) database, and compliance with special controls at the time of clearance would also be stated in the publicly available 510(k) Summary posted in this database. FDA notes that our public database is a transparent tool allowing users to confirm that their devices have been submitted under a new 510(k) and demonstrated conformance to applicable special controls.

## VI. Analysis of Environmental Impact

We have determined under 21 CFR 25.34(b) that this action is of a type that does not individually or cumulatively have a significant effect on the human environment. Therefore, neither an environmental assessment nor an environmental impact statement is required.

## VII. Paperwork Reduction Act of 1995

This administrative order establishes special controls that refer to previously approved collections of information found in other FDA regulations and guidance. Those collections of information are subject to review by the Office of Management and Budget (OMB) under the Paperwork Reduction Act of 1995 (PRA) (44 U.S.C. 3501–3521). The collections of information in 21 CFR part 807, subpart E, have been approved under OMB control number 0910–0120; the collections of information in 21 CFR part 820 have been approved under OMB control number 0910–0073; and the collections of information under 21 CFR part 801 have been approved under OMB control number 0910–0485.

## VIII. Codification of Orders

Prior to the amendments by FDASIA, section 513(e) of the FD&C Act provided for FDA to issue regulations to reclassify devices. Although section 513(e) as amended requires FDA to issue final orders rather than regulations, it also provides for FDA to revoke previously issued regulations by order. FDA will continue to codify classifications and reclassifications in the Code of Federal Regulations (CFR). Changes resulting from final orders will appear in the CFR as changes to codified classification determinations or as newly codified orders. Therefore, under section 513(e)(1)(A)(i), as amended by FDASIA, in the final order, we are revising 21 CFR 878.4800 to remove the classification of surgical staplers and codifying surgical staplers in the new 21 CFR 878.4740, under which surgical staplers for internal use would be reclassified into class II and surgical staplers for external use would remain in class I, exempt from premarket notification.

## IX. References

The following references marked with an asterisk (*) are on display at the Dockets Management Staff (HFA–305), Food and Drug Administration, 5630 Fishers Lane, Rm. 1061, Rockville, MD 20852, 240–402–7500; and are available for viewing by interested persons between 9 a.m. and 4 p.m., Monday through Friday; they also are available electronically at *https://www.regulations.gov.* References without asterisks are not on public display at *https://www.regulations.gov* because they have copyright restriction. Some may be available at the website address, if listed. References without asterisks are available for viewing only at the Dockets Management Staff. FDA has verified the website addresses, as of the date this document publishes in the **Federal Register**, but websites are subject to change over time.


*1. FDA, May 30, 2019, Meeting of the General and Plastic Surgery Devices Panel Meeting Materials (available at *https://www.fda.gov/advisory-committees/advisory-committee-calendar/may-30-31-2019-general-and-plastic-surgery-devices-panel-medical-devices-advisory-committee-meeting*).

2. Folkesson, J., J. Nilsson, L. Påhlman, et al., ''The Circular Stapling Device as a Risk Factor for Anastomotic Leakage.'' *Colorectal Disease.* 2004 July; 6(4):275–9.

3. Ouchi, A., A. Masahiko, K. Aono, et al., ''Staple-Line Recurrence Arising 10 Years After Functional End-to-End Anastomosis for Colon Cancer: A Case Report.'' *Surgical Case Reports.* 2015 December; 1:7.

4. Hsu, T.C. and M.J. Chen, ''Presence of Colon Carcinoma Cells at the Resection Line May Cause Recurrence Following Stapling Anastomosis.'' *Asian Journal of Surgery.* 2018 November; 41(6):569–572.

*5. ''Guidance for Industry and Food and Drug Administration Staff: Use of International Standard ISO 10993–1, 'Biological Evaluation of Medical Devices—Part 1: Evaluation and Testing Within a Risk Management Process,' '' September 4, 2020, available at: *https://www.fda.gov/regulatory-information/search-fda-guidance-documents/use-international-standard-iso-10993-1-biological-evaluation-medical-devices-part-1-evaluation-and.*

*6. ''Guidance for Industry and FDA Staff: The Least Burdensome Provisions: Concept and Principles,'' February 5, 2019, available at: *https://www.fda.gov/regulatory-information/search-fda-guidance-documents/least-burdensome-provisions-concept-and-principles.*

*7. FDA, March 8, 2019, Letter to Health Care Providers, ''Safe Use of Surgical Staplers and Staples,'' available at: *https://www.fda.gov/medical-devices/letters-health-care-providers/safe-use-surgical-staplers-and-staples-letter-health-care-providers.*

*8. ''Guidance for Industry and Food and Drug Administration Staff: Deciding When to Submit a 510(k) for a Change to an Existing Device,'' October 25, 2017, available at: *https://www.fda.gov/regulatory-information/search-fda-guidance-documents/deciding-when-submit-510k-change-existing-device.*

9. Lee, S., B. Ahn, and S. Lee, ''The Relationship Between the Number of Intersections of Staple Lines and Anastomotic Leakage After the Use of a Double Stapling Technique in Laparoscopic Colorectal Surgery.'' *Surgical Laparoscopy, Endoscopy & Percutaneous Techniques.* 2017 August; 27(4):273–281.

10. Crafa, F., J. Megevand, G. Romano, and P. Sileri, ''New Double-Stapled

Anastomotic Technique to Avoid Crossing Staple Lines.'' *Techniques in Coloproctology.* 2015; 19: 319–320.

**List of Subjects in 21 CFR Part 878**

Medical devices.

Therefore, under the Federal Food, Drug, and Cosmetic Act, and under authority delegated to the Commissioner of Food and Drugs, 21 CFR part 878 is amended as follows:

## PART 878—GENERAL AND PLASTIC SURGERY DEVICES

■ 1. The authority citation for part 878 continues to read as follows:

**Authority:** 21 U.S.C. 351, 360, 360c, 360e, 360j, 360*l,* 371.

■ 2. Add § 878.4740 to subpart E to read as follows:

### § 878.4740 Surgical stapler.

(a) Surgical stapler for external use.

(1) *Identification.* A surgical stapler for external use is a specialized prescription device used to deliver compatible staples to skin during surgery.

(2) *Classification.* Class I (general controls). The device is exempt from the premarket notification procedures in subpart E of part 807 of this chapter, subject to the limitations in § 878.9.

(b) Surgical stapler for internal use.

(1) *Identification.* A surgical stapler for internal use is a specialized prescription device used to deliver compatible staples to internal tissues during surgery for resection, transection, and creating anastomoses.

(2) *Classification.* Class II (special controls). The special controls for this device are:

(i) Performance testing must demonstrate that the stapler, when used with compatible staples, performs as intended under anticipated conditions of use. Performance testing must include the following:

(A) Evaluation of staple formation characteristics in the maximum and minimum tissue thicknesses for each staple type;

(B) For manual staplers only, measurement of the worst-case deployment pressures on stapler firing force;

(C) Measurement of staple line strength;

(D) Confirmation of staple line integrity; and

(E) In vivo confirmation of staple line hemostasis.

(ii) For powered staplers only, appropriate analysis/testing must demonstrate the electromagnetic compatibility and electrical, thermal, and mechanical safety of the device.

(iii) For powered staplers only, appropriate software verification, validation, and hazard analysis must be performed.

(iv) Human factors testing must demonstrate that the clinician can correctly select and safely use the device, as identified in the labeling, based on reading the directions for use.

(v) The elements of the device that may contact the patient must be demonstrated to be biocompatible.

(vi) Performance data must demonstrate the sterility of the device.

(vii) Validation of cleaning and sterilization instructions must demonstrate that any reusable device components can be safely and effectively reprocessed per the recommended cleaning and sterilization protocol in the labeling.

(viii) Performance data must support the shelf life of the device by demonstrating continued device functionality, sterility, and package integrity over the identified shelf life.

(ix) Labeling of the device must include the following:

(A) Unless data demonstrates the safety of doing so, contraindications must be identified regarding use of the device on tissues for which the risk of stapling outweighs any reasonably foreseeable benefit due to known complications, including the stapling of tissues that are necrotic, friable, or have altered integrity.

(B) Unless available information demonstrates that the specific warnings do not apply, the labeling must provide appropriate warnings regarding how to avoid known hazards associated with device use including:

(*1*) Avoidance of use of the stapler to staple tissue outside of the labeled limits for maximum and minimum tissue thickness;

(*2*) Avoidance of obstructions to the creation of the staple line and the unintended stapling of other anatomic structures;

(*3*) Avoidance of clamping and unclamping of delicate tissue structures to prevent tissue damage;

(*4*) Avoidance of use of the stapler on the aorta;

(*5*) Establishing proximal control of blood vessels prior to stapling where practical and methods of blood vessel control in the event of stapler failure;

(*6*) Ensuring stapler compatibility with staples; and

(*7*) Risks specifically associated with the crossing of staple lines.

(C) Specific user instructions for proper device use including measures associated with the prevention of device malfunction, and evaluation of the appropriateness of the target tissue for stapling.

(D) List of staples with which the stapler has been demonstrated to be compatible.

(E) Identification of key performance parameters and technical characteristics of the stapler and the compatible staples needed for safe use of the device.

(F) Information regarding tissues on which the stapler is intended to be used.

(G) Identification of safety mechanisms of the stapler.

(H) Validated methods and instructions for reprocessing of any reusable device components.

(I) An expiration date/shelf life.

(x) Package labels must include critical information and technical characteristics necessary for proper device selection.

■ 3. In § 878.4800, revise paragraph (a) to read as follows:

### § 878.4800 Manual surgical instrument for general use.

(a) *Identification.* A manual surgical instrument for general use is a nonpowered, hand-held, or hand-manipulated device, either reusable or disposable, intended to be used in various general surgical procedures. The device includes the applicator, clip applier, biopsy brush, manual dermabrasion brush, scrub brush, cannula, ligature carrier, chisel, clamp, contractor, curette, cutter, dissector, elevator, skin graft expander, file, forceps, gouge, instrument guide, needle guide, hammer, hemostat, amputation hook, ligature passing and knot-tying instrument, knife, blood lancet, mallet, disposable or reusable aspiration and injection needle, disposable or reusable suturing needle, osteotome, pliers, rasp, retainer, retractor, saw, scalpel blade, scalpel handle, one-piece scalpel, snare, spatula, disposable or reusable stripper, stylet, suturing apparatus for the stomach and intestine, measuring tape, and calipers. A surgical instrument that has specialized uses in a specific medical specialty is classified in separate regulations in parts 868 through 892 of this chapter.

* * * * *

Dated: October 4, 2021.

**Lauren K. Roth,**

*Associate Commissioner for Policy.*

[FR Doc. 2021–22041 Filed 10–7–21; 8:45 am]

BILLING CODE 4164–01–P

## DEPARTMENT OF HOMELAND SECURITY

### Coast Guard

### 33 CFR Part 100

**[Docket No. USCG–2021–0651]**

### Special Local Regulations; Recurring Marine Events, Sector St. Petersburg

**AGENCY:** Coast Guard, Department of Homeland Security (DHS).

**ACTION:** Notification of enforcement of regulation.

**SUMMARY:** The Coast Guard will enforce special local regulations for the Roar Offshore on October 8 and 9, 2021, to provide for the safety of life on navigable waterways during this event. The regulation for recurring marine events within Sector St. Petersburg identifies the regulated area for this event in Fort Myers Beach, FL. During the enforcement periods, the operator of any vessel in the regulated area must comply with directions from the Patrol Commander or any designated representative.

**DATES:** The regulations in 33 CFR 100.703, Table 1 to § 100.703, Line No. 8, will be enforced from 10:00 a.m. until 6:30 p.m., each day on October 8 and 9, 2021.

**FOR FURTHER INFORMATION CONTACT:** If you have questions about this notification of enforcement, call or email Marine Science Technician First Class Michael Shackleford, Sector St. Petersburg Prevention Department, Coast Guard; telephone (813) 228–2191, email *Michael.d.shackleford@uscg.mil.*

**SUPPLEMENTARY INFORMATION:** The Coast Guard will enforce the special local regulations in 33 CFR 100.703, Table 1 to § 100.703, Line No. 8, for the Roar Offshore regulated area from 10:00 a.m. to 6:30 p.m., on October 8–9, 2021. This action is being taken to provide for the safety of life on navigable waterways during this event. Our regulation for recurring marine events, Sector St. Petersburg, § 100.703, Table 1 to § 100.703, Line No. 8, specifies the location of the regulated area for the Roar Offshore which encompasses portions of the Gulf of Mexico near Fort Myers Beach. During the enforcement periods, as reflected in § 100.703(c), if you are the operator of a vessel in the regulated area you must comply with directions from the Patrol Commander or any designated representative.

In addition to this notification of enforcement in the **Federal Register**, the Coast Guard plans to provide notification of this enforcement period via the Local Notice to Mariners and/or marine information broadcasts.

Dated: September 29, 2021.

**Matthew A. Thompson,**

*Captain, U.S. Coast Guard, Captain of the Port St. Petersburg.*

[FR Doc. 2021–22008 Filed 10–7–21; 8:45 am]

**BILLING CODE 9110–04–P**

---

## DEPARTMENT OF HOMELAND SECURITY

### Coast Guard

### 33 CFR Part 165

**[Docket No. USCG–2021–077]**

### Safety Zone; Monte Foundation Fireworks, Capitola Pier, Capitola, CA

**AGENCY:** Coast Guard, Department of Homeland Security (DHS).

**ACTION:** Notification of enforcement of regulation.

**SUMMARY:** The Coast Guard will enforce the safety zone for the Monte Foundation Fireworks Display in the Captain of the Port, San Francisco area of responsibility during the dates and times noted below. This action is necessary to protect life and property of the maritime public from the hazards associated with the fireworks display. During the enforcement period, unauthorized persons or vessels are prohibited from entering into, transiting through, or anchoring in the safety zone, unless authorized by the Patrol Commander (PATCOM) or other Federal, state, or local law enforcement agencies on scene to assist the Coast Guard in enforcing the regulated area.

**DATES:** The regulation in 33 CFR 165.1191, will be enforced for the location in Table 1 to § 165.1191, Item number 22, from 8:00 p.m. to 8:20 p.m. on October 10, 2021.

**FOR FURTHER INFORMATION CONTACT:** If you have questions about this notification of enforcement, call or email Lieutenant Anthony Solares, Waterways Management, U.S. Coast Guard Sector San Francisco; telephone (415) 399–3585, email *SFWaterways@uscg.mil.*

**SUPPLEMENTARY INFORMATION:** The Coast Guard will enforce the safety zone established in 33 CFR 165.1191, Table 1, Item number 22, for the Monte Foundation Fireworks Display from 8:00 p.m. to 8:20 p.m. on October 10, 2021. The Captain of the Port has delegated the authority to issue the notification of enforcement for this regulation to the Prevention Department Head.

The safety zone will extend to all navigable waters around the land-based launch site at the Capitola Pier in Capitola, CA. During the 20-minute fireworks display, scheduled to begin at approximately 8:00 p.m. on October 10, 2021, the safety zone will encompass navigable waters around and under the fireworks launch site within a radius of 1,000 feet in approximate position 36°58′10″ N, 121°57′12″ W (NAD 83) for the Monte Foundation Fireworks Display.

This safety zone will be enforced from 8:00 p.m. until 8:20 p.m. on October 10, 2021, or as announced via Broadcast Notice to Mariners. In addition to this notification of enforcement in the **Federal Register**, the Coast Guard plans to provide notification of this enforcement period via the Local Notice to Mariners.

Under the provisions of 33 CFR 165.1191, unauthorized persons or vessels are prohibited from entering into, transiting through, or anchoring in the safety zone during all applicable effective dates and times, unless authorized to do so by the PATCOM or other Official Patrol defined as a federal, state, or local law enforcement agency on scene to assist the Coast Guard in enforcing the regulated area. Additionally, each person who receives notice of a lawful order or direction issued by the PATCOM or Official Patrol shall obey the order or direction. The PATCOM or Official Patrol may, upon request, allow the transit of commercial vessels through regulated areas when it is safe to do so.

If the Captain of the Port determines that the regulated area need not be enforced for the full duration stated in this notification, a Broadcast Notice to Mariners may be used to grant general permission to enter the regulated area.

Dated: October 4, 2021.

**Hale A. Allegretti,**

*Commander, U.S. Coast Guard, Prevention Department Head, Sector San Francisco.*

[FR Doc. 2021–22001 Filed 10–7–21; 8:45 am]

**BILLING CODE 9110–04–P**

**DEPARTMENT OF HOMELAND SECURITY**

**Coast Guard**

**33 CFR Part 165**

**[Docket No. USCG–2021–0780]**

**RIN 1625–AA08**

## Safety Zone; Lake Tahoe Dive Operations, Lake Tahoe, CA

**AGENCY:** Coast Guard, Department of Homeland Security (DHS).

**ACTION:** Temporary final rule.

**SUMMARY:** The U.S. Coast Guard is establishing a safety zone, within Lake Tahoe in Lake Tahoe, CA, in support of Navy Special Warfare Group (NSWG–1) dive operations. This safety zone is necessary to provide for the safety of the divers while performing dive operations and to protect personnel, vessels, and the marine environment from potential hazards created by the NSWG–1 on-water training and associated operations. The regulation restricts vessel traffic movement and protects divers from the hazards associated with the operation and vessel traffic. Entry of vessels or persons into this zone is prohibited unless specifically authorized by the Captain of the Port Sector San Francisco.

**DATES:** This rule is effective without actual notice from October 8, 2021, through 11:59 p.m. on October 14, 2021. For the purposes of enforcement, actual notice will be used from 12:01 a.m. October 5, 2021, until October 8, 2021.

**ADDRESSES:** To view documents mentioned in this preamble as being available in the docket, go to *https://www.regulations.gov,* type USCG–2021–0780 in the ''SEARCH'' box and click ''SEARCH.'' Click on Open Docket Folder on the line associated with this rule.

**FOR FURTHER INFORMATION CONTACT:** If you have questions about this rule, call or email Lieutenant Anthony I. Solares, U.S. Coast Guard District 11, Sector San Francisco, at 415–399–3585, *SFWaterways@uscg.mil.*

**SUPPLEMENTARY INFORMATION:**

### I. Table of Abbreviations

CFR Code of Federal Regulations
DHS Department of Homeland Security
FR Federal Register
NPRM Notice of proposed rulemaking
§ Section
COTP Captain of the Port
PATCOM Patrol Commander
U.S.C. United States Code

### II. Background Information and Regulatory History

The Coast Guard is issuing this temporary rule without prior notice and opportunity to comment pursuant to authority under section 4(a) of the Administrative Procedure Act (APA) (5 U.S.C. 553(b)). This provision authorizes an agency to issue a rule without prior notice and opportunity to comment when the agency for good cause finds that those procedures are ''impracticable, unnecessary, or contrary to the public interest.'' Under 5 U.S.C. 553(b)(B), the Coast Guard finds that good cause exists for not publishing a notice of proposed rulemaking (NPRM) with respect to this rule because it is impracticable. We must establish this regulation by October 5, 2021, and lack sufficient time to provide a reasonable comment period and then consider those comments before issuing this rule.

Under 5 U.S.C. 553(d)(3), the Coast Guard finds that good cause exists for making this rule effective less than 30 days after publication in the **Federal Register**. Delaying the effective date of this rule would be contrary to public interest because immediate action is needed to ensure the safety of divers and to protect personnel, vessels, and the marine environment from potential hazards created by the NSWG–1 dive operations starting October 5, 2021.

### III. Legal Authority and Need for Rule

The Coast Guard is issuing this rule under authority in 46 U.S.C. 70034 (previously 33 U.S.C. 1231). The Captain of the Port San Francisco has determined that potential hazards associated with dive operations will exist between October 5, 2021, and October 14, 2021. There will be a safety concern for anyone within a 100-yard radius of dive operations. For this reason, the rule is needed to protect personnel, vessels, and the marine environment in the navigable waters surrounding the dive operations.

### IV. Discussion of the Rule

This rule establishes a safety zone in the navigable waters around the dive operations occurring in Lake Tahoe, CA. The safety zone will be in effect between October 5, 2021, and October 14, 2021, while NSWG–1 is conducting on-water dive operations and associated activities. The safety zone will cover all navigable waters of Lake Tahoe, from surface to bottom, within a circle formed by connecting all points 100 yards out from the location of the dive operations at approximate position 39°9′52.8″ N, 120°7′49.4″ W to approximate position 39°10′50.9″ N, 120°5′37.4″ W or as announced via Broadcast Notice to Mariners. The duration of the zone is intended to protect divers, personnel, vessels, and the marine environment in the navigable waters surrounding the dive operations while dive operations are being conducted. No vessel or person will be permitted to enter the safety zone without obtaining permission from the COTP or a designated representative.

### V. Regulatory Analyses

We developed this rule after considering numerous statutes and Executive orders related to rulemaking. Below we summarize our analyses based on a number of these statutes and Executive orders and we discuss First Amendment rights of protestors.

#### *A. Regulatory Planning and Review*

Executive Orders 12866 and 13563 direct agencies to assess the costs and benefits of available regulatory alternatives and, if regulation is necessary, to select regulatory approaches that maximize net benefits.

This regulatory action determination is based on the limited duration and narrowly tailored geographic area of the safety zone. Although this rule restricts access to the water encompassed by the safety zone, the effect of this rule will not be significant because the local waterway users will be notified to ensure the safety zone will result in minimum impact. The vessels desiring to transit through or around the safety zone may do so upon express permission from the COTP or the COTP's designated representative.

#### *B. Impact on Small Entities*

The Regulatory Flexibility Act of 1980, 5 U.S.C. 601–612, as amended, requires Federal agencies to consider the potential impact of regulations on small entities during rulemaking. The term ''small entities'' comprises small businesses, not-for-profit organizations that are independently owned and operated and are not dominant in their fields, and governmental jurisdictions with populations of less than 50,000. The Coast Guard certifies under 5 U.S.C. 605(b) that this rule will not have a significant economic impact on a substantial number of small entities.

While some owners or operators of vessels intending to transit the safety zone may be small entities, for the reasons stated in section V.A. above, this rule will not have a significant economic impact on any vessel owner or operator.

Under section 213(a) of the Small Business Regulatory Enforcement

Fairness Act of 1996 (Pub. L. 104–121), we want to assist small entities in understanding this rule. If the rule would affect your small business, organization, or governmental jurisdiction and you have questions concerning its provisions or options for compliance, please contact the person listed in the **FOR FURTHER INFORMATION CONTACT** section.

Small businesses may send comments on the actions of Federal employees who enforce, or otherwise determine compliance with, Federal regulations to the Small Business and Agriculture Regulatory Enforcement Ombudsman and the Regional Small Business Regulatory Fairness Boards. The Ombudsman evaluates these actions annually and rates each agency's responsiveness to small business. If you wish to comment on actions by employees of the Coast Guard, call 1–888–REG–FAIR (1–888–734–3247). The Coast Guard will not retaliate against small entities that question or complain about this rule or any policy or action of the Coast Guard.

*C. Collection of Information*

This rule will not call for a new collection of information under the Paperwork Reduction Act of 1995 (44 U.S.C. 3501–3520).

*D. Federalism and Indian Tribal Governments*

A rule has implications for federalism under Executive Order 13132, Federalism, if it has a substantial direct effect on the States, on the relationship between the National Government and the States, or on the distribution of power and responsibilities among the various levels of government. We have analyzed this rule under that order and have determined that it is consistent with the fundamental federalism principles and preemption requirements described in Executive Order 13132.

Also, this rule does not have tribal implications under Executive Order 13175, Consultation and Coordination with Indian Tribal Governments, because it will not have a substantial direct effect on one or more Indian tribes, on the relationship between the Federal Government and Indian tribes, or on the distribution of power and responsibilities between the Federal Government and Indian tribes. If you believe this rule has implications for federalism or Indian tribes, please contact the person listed in the **FOR FURTHER INFORMATION CONTACT** section.

*E. Unfunded Mandates Reform Act*

The Unfunded Mandates Reform Act of 1995 (2 U.S.C. 1531–1538) requires Federal agencies to assess the effects of their discretionary regulatory actions. In particular, the Act addresses actions that may result in the expenditure by a State, local, or tribal government, in the aggregate, or by the private sector of $100,000,000 (adjusted for inflation) or more in any one year. Though this rule will not result in such an expenditure, we do discuss the effects of this rule elsewhere in this preamble.

*F. Environment*

We have analyzed this rule under Department of Homeland Security Directive 023–01, Rev. 1, associated implementing instructions, and Environmental Planning COMDTINST 5090.1 (series), which guide the Coast Guard in complying with the National Environmental Policy Act of 1969 (42 U.S.C. 4321–4370f), and have determined that this action is one of a category of actions that do not individually or cumulatively have a significant effect on the human environment. This rule involves a temporary safety zone in the navigable waters that will only extend 100-yards out from active NSWG–1 dive operations and associated activities occurring in Lake Tahoe, CA. It is categorically excluded from further review under paragraph L60(a) of Appendix A, Table 1 of DHS Instruction Manual 023–01–001–01, Rev. 1. A Record of Environmental Consideration supporting this determination is available in the docket. For instructions on locating the docket, see the **ADDRESSES** section of this preamble.

*G. Protest Activities*

The Coast Guard respects the First Amendment rights of protesters. Protesters are asked to contact the person listed in the **FOR FURTHER INFORMATION CONTACT** section to coordinate protest activities so that your message can be received without jeopardizing the safety or security of people, places, or vessels.

**List of Subjects in 33 CFR Part 165**

Harbors, Marine safety, Navigation (water), Reporting and recordkeeping requirements, Security measures, Waterways.

For the reasons discussed in the preamble, the Coast Guard amends 33 CFR part 165 as follows:

## PART 165—REGULATED NAVIGATION AREAS AND LIMITED ACCESS AREAS

■ 1. The authority citation for part 165 continues to read as follows:

**Authority:** 46 U.S.C. 70034, 70051; 33 CFR 1.05–1, 6.04–1, 6.04–6, and 160.5; Department of Homeland Security Delegation No. 00170.1, Revision No. 01.2.

■ 2. Add § 165.T11–071 to read as follows:

**§ 165.T11–071 Safety Zone; Lake Tahoe Dive Operations, Lake Tahoe, CA.**

(a) *Location.* The following area is a safety zone: All navigable waters of Lake Tahoe, from surface to bottom, within the area formed by connecting all points 100 yards out from the location of the dive operation at approximate position 39°9′52.8″ N, 120°7′49.4″ W to approximate position 39°10′50.9″ N, 120°5′37.4″ W or as announced via Broadcast Notice to Mariners.

(b) *Definitions.* As used in this section, ''designated representative'' means a Coast Guard Patrol Commander, including a Coast Guard coxswain, petty officer, or other officer operating a Coast Guard vessel or a Federal, State, or local officer designated by or assisting the Captain of the Port San Francisco (COTP) in the enforcement of the safety zone.

(c) *Regulations.* (1) Under the general safety zone regulations in subpart C of this part, you may not enter the safety zone described in paragraph (a) of this section unless authorized by the COTP or the COTP's designated representative.

(2) The safety zone is closed to all vessel traffic, except as may be permitted by the COTP or the COTP's designated representative.

(3) Vessel operators desiring to enter or operate within the safety zone must contact the COTP or the COTP's designated representative to obtain permission to do so. Vessel operators given permission to enter or operate in the safety zone must comply with all lawful orders or directions given to them by the COTP or the COTP's designated representative. Persons and vessels may request permission to enter the safety zone on VHF–23A or through the 24-hour Command Center at telephone (415) 399–3547.

(d) *Enforcement period.* This section will be enforced from October 5, 2021, at 12:01 a.m. until October 14, 2021, at 11:59 p.m., or as announced via marine information broadcast.

(e) *Information broadcasts.* The COTP or the COTP's designated representative will notify the maritime community of periods during which this zone will be enforced in accordance with § 165.7.

Dated: October 4, 2021.

**Taylor Q. Lam,**

*Captain, U.S. Coast Guard, Captain of the Port, San Francisco.*

[FR Doc. 2021–22040 Filed 10–7–21; 8:45 am]

BILLING CODE 9110–04–P

**DEPARTMENT OF DEFENSE**

**Department of the Army, Corps of Engineers**

**33 CFR Part 334**

**[COE–2020–0015]**

## Pacific Ocean at Marine Corps Base, Camp Blaz, Mason Live-Fire Training Range Complex, on the North Coast of Guam; Danger Zone

**AGENCY:** U.S. Army Corps of Engineers, Department of Defense (DoD).

**ACTION:** Final rule.

**SUMMARY:** The Corps of Engineers (Corps) is amending its regulations to establish a danger zone in the Pacific Ocean adjacent to the Mason Live-Fire Training Range Complex at Marine Corps Base, Camp Blaz on the north coast of Guam. The danger zone is located entirely within the Pacific Ocean, comprising 3,660 acres and extending approximately 2.8 miles into the ocean from the high tide line. Establishment of the danger zone will intermittently prohibit vessels from lingering in the danger zone when the range is in active use in order to ensure public safety.

**DATES:** *Effective date:* November 8, 2021.

**ADDRESSES:** U.S. Army Corps of Engineers, Attn: CECW–CO (David Olson), 441 G Street NW, Washington, DC 20314–1000.

**FOR FURTHER INFORMATION CONTACT:** Mr. David Olson, Headquarters, Operations and Regulatory Division, at *David.B.Olson@usace.army.mil* or 202–761–4922.

**SUPPLEMENTARY INFORMATION:** In response to a request by the United States Marine Corps, and pursuant to its authorities in Section 7 of the Rivers and Harbors Act of 1917 (40 Stat. 266; 33 U.S.C. 1) and Chapter XIX of the Army Appropriations Act of 1919 (40 Stat. 892; 33 U.S.C. 3), the Corps of Engineers (Corps) is amending its danger zone regulations to establish a permanent danger zone in the Pacific Ocean adjacent to the Mason Live-Fire Training Range Complex (LFTRC) on Guam. The danger zone regulation will be added at 33 CFR 334.1425. The danger zone is needed for the Department of Defense to meet its mission under 10 U.S.C. 5063, which is to maintain, train, and equip combat-ready military forces, deter aggression, and maintain freedom of the seas. Due to the strategic location of Guam and the Department of Defense's relocation of Marines from Okinawa to Guam, there will be an increased need for training and testing areas on Guam. The construction of the Mason LFTRC and its associated danger zone are designed to meet this increased need. The danger zone is necessary to protect the public from hazards associated with small arms training.

The proposed rule was published in the **Federal Register** on October 29, 2020 (85 FR 68507). The regulations.gov docket number is COE–2020–0015. Concurrently, a local public notice for the proposed danger zone was sent out from the Corps' Honolulu District. In response to the proposed rule, 89 comments were received. Two commenters were in support of establishing the danger zone. The remaining 87 comments are summarized below with the Corps' responses to those comments.

Four commenters requested either a public hearing with the Corps or public meetings with representatives of the Navy and/or the Corps. The commenters requested these meetings to better understand the impacts of the Mason LFTRC and the proposed danger zone, and to have an open dialogue and discussion. Some commenters requested additional time to comment on the public notice and said that multiple comment periods should be conducted. One commenter stated that a mailing list should be set up for people who wish to be sent public notices directly for similar proposals.

The Corps determined that 30 days was sufficient to provide comments on the proposed danger zone regulation. The Corps reviewed all of the requests for a public hearing or public meetings as well as the comments received in response to the proposed rule. As stated in the Corps' regulations at 33 CFR 327.3(a), a public hearing is to be held ''for the purpose of acquiring information or evidence'' to be considered in the Corps' decision for a proposed action. The Corps determined that the record for this rulemaking action, including the public comments received in response to the proposed rule, contains adequate information regarding public concerns about the proposed danger zone and that a public hearing was not necessary. Public hearing denial letters were sent by the Honolulu District to each requestor on January 14, 2021.

Many commenters stated that no map was available and that they could not provide substantive comments without knowing the geographic limits of the proposed danger zone. A few commenters requested clarification on the times the range would be used or recommended that the rule specify the exact times the range would be in use and danger zone activated. One person said that the Corps had incorrectly calculated the amount of time the area of the danger zone would be closed to navigation.

The Corps provided a map with the district public notice, which was posted on the Corps' website, the Marine Corps Base Camp Blaz (MCBCB) website, and by multiple news outlets in print and on their respective websites. Additionally, the proposed rule that was published in the **Federal Register** and the district public notice both contained coordinates for the proposed danger zone, as well as a narrative location description suitable to inform public comments. Upon review of the map provided with its public notice, the Corps discovered an error in mapping. The map showed the danger zone extending shoreward of the mean high water line. This is incorrect. As stated in the aforementioned narrative description, the danger zone would follow the mean high water line of the Pacific Ocean and would not extend shoreward of this line. A new map has been made which corrects this and shows that the danger zone extends seaward of the mean high water line.

The times proposed for the danger zone to be active were provided in the proposed rule. The exact days of the week during which live fire exercises would occur are at the discretion of the Marines in accordance with their training requirements. Those training requirements may change over time. The Marines will have a strategic communication plan (COMMSTRAT) for alerting the public to future range use. This plan includes posting the schedule on their website, having a public hotline for questions concerning range operations, and issuing Notices To Mariners (NTM). Concerning the comment about miscalculating the total amount of closure times, the Corps did not provide a total amount of training days the danger zone would be activated because training sessions are to be scheduled in the future. Also, the total number of training days is not relevant to this rulemaking action because the Marines establish the training schedules and those training schedules fall outside of the Corps' authority to issue regulations to establish danger zones.

Concerning the requests for extension of the comment period for the proposed rule, the Corps disagrees that additional time is necessary. The Corps provided sufficient time for interested parties to provide their comments on the proposed rule. For most proposed danger zone and restricted area regulations, the Corps provides a 30-day

comment period. The Corps agrees that a mailing list should be available to people who wish to be alerted of public notices. The Honolulu District mailing list can be found at *https://www.poh.usace.army.mil/Missions/Regulatory/Public-Notices/*.

Several commenters stated that the proposed danger zone should be evaluated through the preparation of an environmental impact statement (EIS). Some commenters stated that an EIS should be prepared because of the lack of economic analysis or because they believe that the danger zone would have a significant impact on the quality of the human environment. One commenter said that specific sections of the environmental assessment should be referenced and stated that the public notice was incomplete. Another commenter said that the Corps was placing the responsibility on the public to provide the analysis of impacts. Several commenters said that the establishment of the danger zone is a significant regulatory action. Some commenters requested consultation documents for Section 7 of the Endangered Species Act, the essential fish habitat provisions of the Magnuson-Stevens Fishery Conservation and Management Act, Section 106 of the National Historic Preservation Act, and the Coastal Zone Management Act so that they could comment on the completeness of those consultations.

For the purposes of the National Environmental Policy Act (NEPA), the Federal action being undertaken by the Corps is the promulgation of the danger zone regulation under its authorities at 33 U.S.C. 1 and 3 and the procedures in 33 CFR part 334. The Corps is responsible for assessing the impacts of the proposed danger zone on the human environment, and for preparing appropriate NEPA documentation for its decision on whether to issue the final rule that would establish the danger zone. After evaluating the comments received in response to the proposed rule, to comply with NEPA requirements the Corps prepared an environmental assessment for this rulemaking action and concluded that the establishment of the danger zone would not have a significant impact on the quality of the human environment and therefore does not require the preparation of an EIS. A copy of the environmental assessment is available from the Corps' Honolulu District office. The establishment of this danger zone will not result in work, structures, or any construction within the Pacific Ocean, or any modification to any vegetation, habitat, or structures in the Pacific Ocean, on the shore, or on the land. Therefore, the Corps Federal action, which is the establishment of this danger zone, will not have any impacts on natural resources or historical and cultural resources. With respect to impacts to people on Guam, the danger zone is intended to protect the public from hazards that may result from the use of the Mason LFTRC. The boundaries of the danger zone will be plotted by National Oceanic and Atmospheric Administration (NOAA) on its nautical charts, which will help alert users of those navigable waters to the presence of the danger zone, and to the text of the regulations governing that danger zone.

The establishment of a future Marine Corps base on Guam is a separate action that is outside of the Corps' rulemaking action for the establishment of this danger zone. Therefore, in its NEPA documentation for the rulemaking to establish the danger zone, the Corps is not required to address the potential future establishment of a Marine Corps base on Guam. Because the danger zone will be in effect only when the range is in use, the establishment of the danger zone will promote public safety, and impacts to the human environment caused by the establishment of the danger zone have been minimized. Vessel operators and fishers can use the navigable waters within the danger zone when the danger zone is not activated for live fire training exercises. The Corps has determined there is no need or requirement for mitigation beyond incorporating measures into the regulation governing the danger zone to minimize impacts to maritime traffic and fishing activities. The Corps determined that this rulemaking action is not a significant regulatory action under Executive Order 12866 because it does not trigger any of the four significance thresholds identified in that Executive order.

At Marine Corps Base Camp Blaz, the Navy is the Federal agency responsible for compliance with applicable Federal laws, which may include Section 7 of the Endangered Species Act, the Essential Fish Habitat provisions of the Magnuson-Stevens Fishery Conservation and Management Act, Section 106 of the National Historic Preservation Act, and the Coastal Zone Management Act. The Navy's documents demonstrating compliance with these laws and concurrences from the agencies administering these laws can be obtained from the Navy's 2015 Final Supplemental Environmental Impact Statement (SEIS) for the Guam and Commonwealth of the Northern Mariana Islands Military Relocation.

A couple of commenters said that the Corps does not have the authority to establish the danger zone. One of these comments was specific to Chamoru lands and the other comment pertained to the area shoreward of waters of the United States. Some commenters stated that specifics on land restrictions should be made clear and studied for how these restrictions would affect cultural and historic sites. One commenter said that the restrictions were arbitrarily decided upon.

The Corps' authority for establishing danger zones is provided in Chapter 143, Subchapter XIX of the Army Appropriations Act of 1919 (40 Stat 892; 33 U.S.C. 3). The Corps agrees that it does not have the authority to establish danger zones in uplands landward of the mean high water line. The danger zone does not extend into areas landward of the mean high water line. Therefore, there will be no land restrictions caused by the establishment of this danger zone. With respect to the comment asserting that the restrictions were arbitrarily decided, the Corps disagrees that the decision was arbitrary. The Marines conducted extensive studies on the ballistics of weapons to be fired at the Mason LFTRC. The design of each range further limited the space in navigable waters needed for the danger zone. The Marines requested that the danger zone be comprised of two areas to close off the smallest amount of area necessary for specific training sessions, to minimize impacts to the public's use of navigable waters.

A couple of commenters asked about the consequences of entering the danger zone and requested information regarding how the public could inform the Marines if someone violated the danger zone. These commenters said there is a need for public outreach and education on the use of the danger zone.

Concerning potential consequences for entering the danger zone while it is being used for small arms training, the most immediate consequence would be the potential for being struck by bullets, which on rare occasions may ricochet beyond the range's containment berms. This safety hazard is the reason for the establishment of this danger zone, which is to help provide for public safety when the range is in use. If a person, vessel, watercraft, etc. enter the danger zone without authorization, MCBCB Range Control will notify the U.S. Coast Guard for action. Concerning how the public can notify the Marines if someone appears to violate the danger zone regulation, notification of alleged violations of the danger zone regulation can be provided to the MCBCB Range

Control, U.S. Coast Guard, or by calling 911. The Corps agrees that public outreach and education on the danger zone can help provide for the safety of the public. The Marines' COMMSTRAT will establish a method of public notification that will provide a snapshot of the range utilization calendar. Once the MCBCB Range Control Facility is established it will have a phone number for public inquiries. Additionally, the Marines will issue NTMs prior to active live fire training exercises and the danger zone will be depicted on applicable NOAA nautical charts.

Many commenters said that that the establishment of the danger zone would have negative impacts on local fishers. One commenter asserted that the danger zone would deprive the people of Guam of their traditional fishing activities. One commenter stated that the danger zone would deny growth and development for the people Guam. Other commenters noted that the impacted fishers would no longer be able to sell fish at local markets to support their families. A few commenters said that the federal government is taking too much of Guam's waters and submerged lands.

The establishment and use of the danger zone would restrict access to navigable waters within the danger zone only during small arms training exercises. Those navigable waters will be available for fishing when the Mason LFTRC is not being used for small arms training. The Marines have included a two-tiered approach to ensure that the least amount of area of navigable waters is restricted during live fire training, thus reducing the amount of closure time in the larger area. Practicing traditional, commercial, or recreational fishing in this area would continue to be allowed when the danger zone is not activated. Establishment of the danger zone would not prevent local fishers from being able to catch and sell fish at local markets. The danger zone is located over federally owned submerged lands and would not require the acquisition of any lands, submerged or otherwise. The Corps' regulations require that danger zones and restricted areas provide public access to the affected areas to the maximum extent practicable and not cause unreasonable interference with or restrict the food fishing industry (see 33 CFR 334.3(a) and (b), respectively). This final rule complies with that regulation.

One commenter said that 15 to 20 vessels run through these waters each day and that it is a popular area for many types of fish. Another commenter stated that the danger zone would result in the loss of some of the best waters for fishermen. Other commenters said that this danger zone is within prime trolling and bottom fishing grounds used by many boaters and that any restriction would be unreasonable. Another commenter said that fishers would not be able to fish when particular fish are running or in migration with good sea conditions.

Offshore fishing areas located within the danger zone would not be allowed when the range is in use. Recreational boating and fishing would be permitted within the danger zone when live-fire training is not being conducted at the range. To provide for their safety, fishers and recreational boaters cannot enter the danger zone when live firing exercises are being conducted. All live fire training will cease if watercraft inadvertently enter the danger zone and training would resume once the vessel has cleared the danger zone. When live fire training is occurring, fishers and recreational boaters will need to navigate around the danger zone.

As stated in the Navy's 2015 SEIS, approximately 65% of fishing trips occur on the weekends and 35% of fishing trips occur on weekdays. Training at the Mason LFTRC will typically occur on weekdays when fewer vessels would potentially be transiting the danger zone. However, periodic weekend use of the Mason LFTRC could occur as needed. To provide awareness of times that the range is in use, the Marines will provide the proposed training schedule to the U.S. Coast Guard, who will issue and broadcast NTMs that would identify the danger zone as being in active use and direct vessel operators to navigate clear of the active danger zone. Additionally, boaters and fishers will be able to contact range control via radio or phone to get real time updates of active use of the Mason LFTRC, which will also minimize impacts on vessel operators. This communication will allow boaters to transit the danger zone during scheduled training days when the range is temporarily inactive. Range lookouts will scan the active area prior to and during live-fire training sessions to ensure that there are no vessels within or approaching the danger zone. If vessels are at risk of entering the active area, use of the range would be suspended until the vessel leaves the danger zone.

A few commenters said that restrictions of the navigable waters for up to 75% of the year is too great for local fishers. A couple of commenters stated that if the danger zone is established it should be active fewer days out of the year to ensure that main fishing seasons are not impacted. One commenter asserted that due to the amount of time the Marines could restrict access to the danger zone, the entire fishing community would be at the mercy of the Marines' training schedule.

The proposed rule did not include estimates of the number of training days expected to occur during a typical year because the number of training days may vary from year-to-year. In response to these comments the Marines clarified, through Marine Corps Order 3550.10, that their standard for range availability is 242 days per calendar year, and that their annual goal is to utilize each range for at least 70 percent of the available days per year, or 169 days if the range is available the entire 242 days. Therefore, if the Mason LFTRC meets the goal of 169 days per year then the active areas of the danger zone would be restricted intermittently for 24 weeks. Additionally, for the larger of the two areas (Area 1), the danger zone would be activated only for training on larger caliber weapons, which would occur with less frequency. As stated above, fishing activities can occur in navigable waters within the danger zone when the danger zone is not in use for live firing exercises.

A few commenters said that the danger zone would result in fishing restrictions that affect the local economy. A few commenters stated that some fishers use these waters to sustain their families and that the activation of the danger zone would limit their ability to feed themselves. Another commenter asked whether the timing of range activities could adjusted to reduce impacts during fishing seasons. One commenter suggested that the Marines provide mitigation for impacts to fishing in the form of placing new Fish Aggregating Devices (FADs), assisting the Guam government in maintaining existing FADs, and/or conducting harbor maintenance around the island.

The Corps acknowledges that the establishment and use of the danger zone will have some impacts on fishing activities but determined that these impacts would not unreasonably interfere with or restrict the food fishing industry. The establishment of the danger zone is necessary for public safety, including the safety of fishers that may fish in the waters within the danger zone. Fishers may utilize these waters for fishing activities when the danger zone is not activated for live firing training sessions. When the danger zone is activated, fishers may utilize navigable waters outside of the danger zone for fishing activities. As discussed in the Navy's 2015 SEIS, the Marines have committed to work with

fishing community leaders and members to ensure the greatest practicable consideration is given to measures that would minimize or offset concerns about fishing impacts due to the regulations governing the danger zone. The Corps has determined that the establishment of the danger zone would not require any compensatory mitigation, such as the installation of new FADs or the maintenance of existing FADs.

The Corps' regulations also require the Corps to consult with the Regional Directors of the U.S. Fish and Wildlife Service and National Marine Fisheries Service regarding potential impacts to the food fishing industry. The Corps' Honolulu District sent each agency a letter dated January 18, 2021, requesting comments in relation to the food fishing industry. Neither agency responded to those letters.

Many commenters expressed opposition to the proposed danger zone because it would restrict recreational access to the waters and coastline. One commenter said that the beaches of Ritidian should be open to the public. A commenter stated that establishing the danger zone would result in beach closures for nine consecutive months. One commenter said that they visit Ritidian every week and the danger zone would limit their access to the beach to only several days a year. A number of commenters indicated that the danger zone would restrict access to upland areas, including public and private lands.

The Corps acknowledges that the danger zone will restrict access to navigable waters within the danger zone while training activities are conducted. However, these restrictions will be intermittent and they are necessary for public safety. The establishment of the danger zone would not deny recreational access to waters and the coast. The danger zone would only restrict recreational access to certain navigable waters for the purposes of safety within the designated areas of the danger zone. Among the ranges within the Mason LFTRC, the Multi-Purpose Machine Gun Range has the largest danger zone (Area 1) and is the only one that would preclude access to a portion of the publicly accessible areas of the Ritidian Unit of the Guam National Wildlife Refuge. When other ranges in the Mason LFTRC are in use, the danger zone (Area 2) would not restrict access to the publicly accessible portion of the Ritidian Unit of the Guam National Wildlife Refuge. The Navy has an agreement with the Guam National Wildlife Refuge to establish new recreational areas to the west of the existing refuge and completely outside of the boundaries of the danger zone. When completed, this area will ensure public access year-round.

The establishment of the restricted area would not limit public access to the beaches to several days during the year. The danger zone would allow access several days of each week of the year. The danger zone would only limit access to waters that are seaward of the mean high water line. The establishment of the danger zone would not restrict access to any upland areas. Also, the Mason LFTRC's design was the only option that could be completed entirely on federal lands. Therefore, there would be no restrictions to private property as a result of the establishment of the danger zone.

Many commenters expressed concerns about cultural and historic resources impacted by the construction of the firing range. Some commenters stated that the government was taking historic lands and destroying resources. Other commenters stated that the impacts to historic properties should not be allowed.

The Corps' authority is limited to issuing regulations for the establishment of the danger zone, which will not cause any physical alteration of the environment. The establishment of the danger zone will not result in effects to cultural and historic resources. Impacts to cultural and historic resources caused by the construction of the base are separate from the Corps' establishment of the danger zone through the rulemaking process. The establishment of the danger zone is an administrative process, and is an undertaking of a type that does not have the potential to cause effects on historic properties, cultural resources, or sacred cultural sites. The danger zone is located entirely in waters of the Pacific Ocean. The establishment of the danger zone involves no construction, structures, or in-water work. The Corps acknowledges that when the range is in use, there will be temporary impacts to access of traditional fishing grounds, and those impacts are discussed above.

A few commenters asked about the efficacy of red flags and lights for notification of an active firing range. One commenter said that it is not clear how the public would know which range area was active. Another commenter stated that protocols should be in place beyond issuing NTMs to inform boaters and the public about range activities. A few commenters asked how the danger zone would be enforced and if protocols would be in place to ensure boaters do not enter the danger zone during training sessions. A couple of commenters expressed concern about how the coastline would be managed to prevent swimmers, fishers, divers, and others from accessing the danger zone during live fire exercises. Commenters also voiced concerns about how the public could notify the Marines if they observed a vessel or person in the danger zone during life firing exercises. Finally, some commenters stated concerns over smaller craft having to travel around the danger zone and having to enter more tumultuous waters to reach fishing areas.

Similar to navigation lights or aids on buoys and approach lighting for airfields, the red lights used for nighttime fire would be visible under all weather conditions that would be conducive to small boat and small arms range operations. The red flag (daytime fire) method of identifying an active danger zone is currently in use at the Finegayan Range, as well as the Naval Base Guam Known Distance and Multi-Purpose Ranges, and has proven to be an effective method of alerting the public of small arms range operation. The public would be informed as to which area is being used through NTMs, or by viewing the range schedule which will be posted on the MCBCB website. The public may also contact the hotline for range control to be set up by the Marines. The Marines' COMMSTRAT plan also includes future education and outreach to the public on the danger zone, and will include graphics and posters displayed at strategic locations across the island to better inform the public.

Prior to the activation of any range for live fire training, range inspectors will physically inspect the beach to ensure members of the public are not present near the danger zone. Military personnel will provide oversight and advise the public of danger zone restrictions. Road guards will have radio communications with MCBCB Range Control. The waters of the danger zone will be monitored by radar inside MCBCB Range Control. MCBCB Range Control will notify the U.S. Coast Guard of the presence of vessels in the danger zone so that the U.S. Coast Guard can take appropriate action. In additional, MCBCB Range Control would notify each range to cease fire until the U.S. Coast Guard removes the vessels or the vessels expeditiously exit the danger zone. The public may notify MCBCB Range Control of vessels entering the danger zone via the hotline that will be established, by contacting MCBCB directly, or by dialing 911.

The Corps acknowledges that to avoid the active danger zones, vessels may

have to travel into deeper waters that are further off the coastline. Prior to leaving, these boaters would be notified when the range will be active via NTMs and the other outreach tools discussed above. Those vessel operators can plan their trips to avoid active live fire exercises.

Many commenters stated concerns to land clearing, impacts to the local aquafer, adverse effect to plants and animals, and potential pollution from construction of the Mason LFTRC and its use. Other commenters expressed concern with how the range would affect threatened or endangered species. One commenter asked how the rounds fired would be collected and the area cleaned while other commenters were concerned with how the discharge of metals would affect the local water supply.

Establishing the danger zone is an administrative process that would have no direct or indirect adverse effects on the environment. Similarly, the establishment of the danger zone would have no effect on threatened and endangered species or designated critical habitat or result in the alteration of any natural resources. The impacts caused by the construction of the base, including the Mason LFTRC, and any other potential impacts shoreward of the mean high water line are beyond the purview of this rulemaking action.

Many commenters said that this danger zone should not be established at Ritidian because other existing ranges and their respective danger zones should be used instead. Other commenters suggested that there are other areas on the island to build the ranges. A few commenters said that it is not possible to have the range and danger zone completely on land.

The Mason LFTRC was designed to meet the specific training needs of the Marines. Other ranges on the island were built for different purposes and needs and do not meet the needs of the Marines. In addition, in its 2015 SEIS, the Navy analyzed five different options including the use of other ranges. The construction of the Mason LFTRC was the only option of the five that could be accomplished solely on federally owned lands. This danger zone is the only option for the Mason LFTRC currently under construction and it must be over the water.

One commenter stated that an alternative would be to establish more stringent requirements for advanced notice to the public. This commenter suggested a minimum 72-hour notice that would allow locals to better plan their recreational or cultural activities in the Ritidian. Two commenters suggested limiting the days that small arms training is conducted. One commenter said that the danger zone should be reduced in size to provide more access to navigable waters.

The Corps acknowledges the benefits of increased communication and advance notice of range operations. The regulations do not specify the time limit for issuing an NTM, and the Corps does not have the authority to impose such a time limit. The Marines have agreed to issue NTMs no later than 24 hours in advance to allow for maximum flexibility for use of the firing range. Additionally, a range schedule will be posted on the MCBCB website. The Marines' COMMSTRAT will establish a method of public notification that will provide a snapshot of the range utilization calendar, and the Marines will establish a phone number for public inquiries. While limiting training sessions may result in the danger zone being activated less often, it is up to the Marines to determine their training requirements.

The Marines have limited the danger zone to the minimum size required to ensure public safety when the ranges are active. The Marines have requested two separate areas within the danger zone: Area 1, which is 3,660 acres in size, and Area 2, which is 1,425 acres in size. Area 2 is 40% the size of Area 1 and would be activated for smaller caliber weapons training on the more frequently used ranges. Area 1 would be activated fewer times than Area 2 because the larger caliber weapons would be trained on less frequently. The Corps has determined that the approach of designating two areas within the danger zone will be less restrictive to the public and will provide greater access to the public while ensuring public safety during live-fire training exercises.

**Procedural Requirements**

*a. Regulatory Planning and Review.* This final rule is not a ''significant regulatory action'' under Executive Order 12866 (58 FR 51735, October 4, 1993) and it was not submitted to the Office of Management and Budget for review.

*b. Review Under the Regulatory Flexibility Act.* This rule has been reviewed under the Regulatory Flexibility Act (Pub. L. 96–354). The Regulatory Flexibility Act generally requires an agency to prepare a regulatory flexibility analysis for any rule subject to notice-and-comment rulemaking requirements under the Administrative Procedure Act or any other statute unless the agency certifies that the rule will not have a significant economic impact on a substantial number of small entities (*i.e.,* small businesses and small governments). The danger zone is necessary to protect public safety during use of the Mason LFTRC. To minimize impacts to maritime traffic, the Marines have designed a two-tiered approach for the danger zone to ensure that the least amount of area is restricted during training sessions. Fishers and other boaters can utilize navigable waters outside of the danger zone when the danger zone is activated for live firing exercises. When the range is not in use, the danger zone will be open to normal maritime traffic and all activities, including fishing, anchoring, and loitering. After considering the economic impacts of this danger zone regulation on small entities, I certify that this action will not have a significant economic impact on a substantial number of small entities.

c. *Review Under the National Environmental Policy Act.* An environmental assessment (EA) has been prepared for the establishment of this danger zone. The Corps has concluded that the establishment of the danger zone will not have a significant impact to the quality of the human environment and, therefore, preparation of an EIS is not required. The final EA and Finding of No Significant Impact may be reviewed at the District Office listed at the **FOR FURTHER INFORMATION CONTACT** section, above.

d. *Unfunded Mandates Act.* This rule does not impose an enforceable duty among the private sector and, therefore, it is not a Federal private sector mandate and it is not subject to the requirements of either Section 202 or Section 205 of the Unfunded Mandates Act. Under Section 203 of the Act, the Corps has also found that small governments will not be significantly and uniquely affected by this rulemaking.

*e. Congressional Review Act.* The Congressional Review Act, 5 U.S.C. 801 *et seq.,* generally provides that before a rule may take effect, the agency promulgating the rule must submit a rule report, which includes a copy of the rule, to each House of the Congress and to the Comptroller General of the United States. The Corps will submit a report containing the final rule and other required information to the U.S. Senate, the U.S. House of Representatives, and the Comptroller General of the United States. A major rule cannot take effect until 60 days after it is published in the **Federal Register**. This final rule is not a ''major rule'' as defined by 5 U.S.C. 804(2).

**List of Subjects in 33 CFR Part 334**

Danger zones, Marine safety, Navigation (water), Restricted areas, Waterways.

For the reasons set out in the preamble, the Corps amends 33 CFR part 334 as follows:

## PART 334—DANGER ZONE AND RESTRICTED AREA REGULATIONS

■ 1. The authority citation for part 334 continues to read as follows:

**Authority:** 40 Stat. 266 (33 U.S.C. 1) and 40 Stat. 892 (33 U.S.C. 3).

■ 2. Add § 334.1425 to read as follows:

**§ 334.1425 Pacific Ocean adjacent to the Mason Live-Fire Training Range Complex located at U.S. Marine Corps Base, Camp Blaz, on the northwestern coast of Guam; danger zone.**

(a) *The areas.* The danger zone will consist of two areas: An outer area (Area 1) for larger caliber weapons and a smaller area (Area 2) for smaller caliber weapons that is set within Area 1. The datum for the coordinates in this section is NAD–83.

(1) *Area 1.* The waters bounded by the following seven points: Point A (13°38′59.443″ N; 144°51′11.522″ E) following the mean high water line to Point B (13°38′36.722″ N; 144°52′50.256″ E), following the mean high water line to Point C (13°38′33.936″ N; 144°52′53.031″ E), Point D (13°40′8.336″ N; 144°53′44.876″ E), Point E (13°40′56.842″ N; 144°53′42.808″ E), Point F (13°41′28.434″ N; 144°52′37.582″ E), and Point G (13°41′3.344″ N; 144°51′53.652″ E).

(2) *Area 2.* A subset of waters within Area 1 bounded by the following six points: Point A (13°39′7.432″ N; 144°52′8.210″ E) following the mean high water line to Point B (13°38′36.722″ N; 144°52′50.256″ E), following the mean high water line to Point C (13°38′33.936″ N; 144°52′53.031″ E), Point D (13°39′54.724″ N; 144°53′37.400″ E), Point E (13°40′25.737″ N; 144°52′43.157″ E), and Point F (13°40′6.494″ N; 144°52′7.349″ E).

(b) *The regulation.* (1) The enforcing agency will designate which area will be closed for use on dates designated for live fire. No persons, watercraft, or vessels shall enter or remain in the area during the times designated for live fire except those authorized by the enforcing agency. All live-fire training will cease if a person, watercraft, or vessel inadvertently enters the designated area and may resume once they have cleared the danger zone. The Installation Range Control Officer will be responsible for submitting all local Notices to Mariners for specific dates of firing, which will be disseminated through the U.S. Coast Guard and on the Marine Corps Base Camp Blaz website. The area will be open to normal maritime traffic when the range is not in use.

(2) When the range is in use red flags will be displayed from conspicuous and easily seen locations on the east and west boundaries of the danger zone to signify that the range is in use. These flags will be removed when firing ceases for the day.

(3) During the night firing, red lights will be displayed on the east and west sides of the danger zone to enable safety observers to detect vessels that may attempt to enter the danger zone. All range flags and red lights will be visible from 360 degrees. Due to the depth of the ocean the danger zone will not be marked with buoys.

(c) *Enforcement.* The restrictions on public access through the danger zone shall be enforced by the Commander, Marine Corps Base, Camp Blaz, and such agencies as the Commander may designate in writing.

**Alvin B. Lee,**

*Director of Civil Works.*

[FR Doc. 2021–21981 Filed 10–7–21; 8:45 am]

BILLING CODE 3720–58–P

## DEPARTMENT OF VETERANS AFFAIRS

### 38 CFR Parts 3 and 36

**RIN 2900–AR26**

### Assistance to Eligible Individuals in Acquiring Specially Adapted Housing

**AGENCY:** Department of Veterans Affairs.

**ACTION:** Final rule.

**SUMMARY:** The Department of Veterans Affairs (VA) is amending its adjudication and loan guaranty regulations regarding eligibility and assistance for certain veterans and members of the Armed Forces in acquiring specially adapted housing assistance. The amendments are necessary to implement certain provisions of the Ryan Kules and Paul Benne Specially Adaptive Housing Improvement Act of 2019.

**DATES:**

*Effective date:* This rule is effective November 8, 2021.

*Applicability dates:* The amendments to 38 CFR 3.809, 3.809a, and 36.4404 shall apply to all applications for benefits that were or are received by VA on or after August 8, 2020, or that were pending before VA (including the Board of Veterans' Appeals), the United States Court of Appeals for Veterans Claims, or the United States Court of Appeals for the Federal Circuit on August 8, 2020.

The amendments to 38 CFR 36.4402, 36.4403, and 36.4406 shall apply to all applications for benefits that were or are received by VA on or after October 1, 2020, or that were pending before VA (including the Board of Veterans' Appeals), the United States Court of Appeals for Veterans Claims, or the United States Court of Appeals for the Federal Circuit on October 1, 2020.

**FOR FURTHER INFORMATION CONTACT:** Terry Rouch, Assistant Director for Loan Policy and Valuation, Loan Guaranty (26), Veterans Benefits Administration, Department of Veterans Affairs, 810 Vermont Ave. NW, Washington DC 20420, (202) 632–8862. (This is not a toll-free telephone number.)

**SUPPLEMENTARY INFORMATION:** The President signed into law the Ryan Kules and Paul Benne Specially Adaptive Housing Improvement Act of 2019 (the Act), Public Law 116–154, 134 Stat. 690, on August 8, 2020. The Act amended certain provisions of 38 U.S.C. chapter 21, *Specially Adapted Housing for Disabled Veterans.*

Chapter 21 authorizes VA to provide specially adapted housing (SAH) assistance to eligible individuals with certain service-connected disabilities. Eligible individuals can include veterans and members of the Armed Forces. 38 U.S.C. 2101A. SAH assistance can be used toward the purchase, construction, or adaptation of a home that suits the individual's living needs. 38 U.S.C. 2102. It can also be used to reduce the debt associated with the costs of acquiring a home that is already adapted. Id. The amount of SAH assistance available to an eligible individual varies depending on factors such as the nature of the individual's disability, the scope of the eligible individual's project, and the amounts of SAH assistance the eligible individual has already received.

### I. Amendments Under Section 2 of the Act

Section 2 of the Act, which became effective upon enactment, amended 38 U.S.C. 2101(a) and (b) to change SAH eligibility for individuals with blindness in both eyes. Previously, the Secretary could provide such an individual with assistance under section 2101(a) if the individual had a permanent and total service-connected disability due to blindness in both eyes having only light perception, plus loss or loss of use of one lower extremity. Alternatively, the

Secretary could provide a lesser amount of assistance under section 2101(b) if the individual had a service-connected disability due to blindness in both eyes with a central visual acuity of 20/200 or less in the better eye with the use of a standard correcting lens. For the purposes of that clause, the Secretary was to have considered an eye with a limitation in the fields of vision such that the widest diameter of the visual field subtends an angle no greater than 20 degrees as having a central visual acuity of 20/200 or less.

With the enactment of the Act, the loss or loss of use of one lower extremity is no longer an eligibility criterion under section 2101(a) for individuals with blindness in both eyes. Further, the criterion that the service-connected disability for blindness be ''permanent and total'' has been changed to ''permanent''. Eligibility for blindness in both eyes under section 2101(a) is no longer described as having only light perception, but is instead described as it had been under the eligibility criteria found in section 2101(b): Having central visual acuity of 20/200 or less in the better eye with the use of a standard correcting lens. For the purposes of this clause, an eye with a limitation in the fields of vision such that the widest diameter of the visual field subtends an angle no greater than 20 degrees shall be considered as having a central visual acuity of 20/200 or less. In effect, an individual who was eligible for SAH assistance under prior section 2101(b)(2)(A) is now eligible to receive SAH assistance under section 2101(a)(2)(B)(ii) instead and can receive up to $100,896 for fiscal year 2021. See 85 FR 71139. The Act removed eligibility for SAH assistance under section 2101(b) for service-connected disability due to blindness in both eyes.

Accordingly, VA is amending its adjudication regulations found at 38 CFR 3.809 and 3.809a and its loan guaranty regulations found at 38 CFR 36.4404 to reflect the changes in section 2101(a) and (b). Such amendments align the regulations with current section 2101(a) and (b). VA has also added applicability date language to clarify that these changes, which mirror the statutory changes, shall apply to all applications for benefits that were or are received by VA on or after August 8, 2020, or that were pending before VA (including the Board of Veterans' Appeals), the United States Court of Appeals for Veterans Claims, or the United States Court of Appeals for the Federal Circuit on August 8, 2020. This date reflects the Act's enactment date.

## II. Amendments Under Section 3 of the Act

Prior to enactment of the Act, under 38 U.S.C. 2102, an eligible individual was allowed three separate grants of assistance under 38 U.S.C. chapter 21. Section 3(a) of the Act amended section 2102(d)(3) to allow a maximum of six grants of assistance. The amendment was effective October 1, 2020. To comply with this change to section 2102(d), VA is amending 38 CFR 36.4402(d)(2), 36.4403, and 36.4406(a)(2). VA is also clarifying that these changes, which mirror the statutory changes, shall apply to all applications for benefits that were or are received by VA on or after October 1, 2020, or that were pending before VA (including the Board of Veterans' Appeals), the United States Court of Appeals for Veterans Claims, or the United States Court of Appeals for the Federal Circuit on October 1, 2020. This date reflects the effective date provided in section 3(f) of the Act.

## III. SAH-Related Provisions of the Act Not Covered by This Rulemaking

Section 3(b) of the Act amended section 2101(a) by increasing from 30 to 120 the number of SAH applications VA can approve annually for post-9/11 veterans described in 38 U.S.C. 2101(a)(2)(A)(ii). These are veterans who served in the Armed Forces on or after September 11, 2001, and are entitled to VA disability compensation for a permanent service-connected disability. For eligibility, the disability had to be incurred on or after September 11, 2001, and must be due to the loss or loss of use of one or more lower extremities which so affects the function of balance or propulsion as to preclude ambulating without the aid of braces, crutches, canes, or a wheelchair. See 38 U.S.C. 2101(a)(2)(A)(ii) and 2101(a)(2)(C). The amendment was effective October 1, 2020. Public Law 116–154, sec. 3(f). VA will, in a future rulemaking, promulgate regulatory changes regarding veterans described in section 2101(a)(2)(A)(ii).

Section 3(c) through (e) increased the statutory aggregate dollar limits authorized for section 2101(a) and 2101(b) grants to $98,492 and $19,733, respectively, effective October 1, 2020. Those amounts were increased for fiscal year 2021, based on an annual adjustment required under 38 U.S.C. 2102(e). See 85 FR 71139 (increasing section 2101(a) and 2101(b) grants to $100,896 and $20,215, respectively). The amounts were also increased for fiscal year 2022, effective October 1, 2021 (section 2101(a) and 2101(b) grants increased to $101,754 and $20,387, respectively). 38 U.S.C. 2102(e). VA intends to publish a separate notice in the **Federal Register** announcing the adjustment for fiscal year 2022.

Finally, section 4 of the Act added a new section 2102(f) that authorizes VA, beginning October 1, 2030, to provide an additional amount of SAH assistance under sections 2101(a) or (b) in an amount that does not exceed half of the aggregate dollar limit for the applicable section, as adjusted for the year in which VA provides the additional assistance. New section 2102(f)(1) limits the assistance to ''covered veterans'' who meet three criteria prescribed in a new 38 U.S.C. 2102(f)(2). To meet these criteria, the covered veteran must be eligible for SAH assistance under section 2101(a)(2) or 2101(b)(2). See 38 U.S.C. 2102(f)(2)(A). At least ten years must have elapsed between the date of his or her application for additional assistance and his or her last use of chapter 21 assistance. See 38 U.S.C. 2102(f)(2)(B). He or she must live in a home that VA determines does not have adaptations that are reasonably necessary because of his or her disability. See 38 U.S.C. 2102(f)(2)(C). VA notes that section 3 of the Act amended section 2102(d)(3) such that the newly enacted six-use limitation (described above) is subject to the new section 2102(f). In other words, a covered Veteran may receive the newly authorized assistance provided under section 2102(f) even if he or she has already obtained the six grants of SAH assistance otherwise authorized.

As mentioned above, assistance under subsection (f) cannot be provided before October 1, 2030. VA intends to promulgate regulations implementing subsection (f), including any amendments that would implement the relevant cross-referencing clause of section 2102(d)(3), in a separate rulemaking.

## Administrative Procedure Act

VA finds good cause under the provisions of 5 U.S.C. 553(b)(B) to publish this rule without prior opportunity for public comment. This amendment merely revises VA's regulations to mirror the statutory changes to the criteria and assistance provided to certain veterans and members of the Armed Forces through the SAH program. These revisions reflect statutory changes VA is adopting directly, without change, into VA's regulations and do not the exercise of any discretion by VA. Therefore, prior notice and opportunity for public comment is unnecessary.

**Executive Orders 12866 and 13563**

Executive Orders 12866 and 13563 direct agencies to assess the costs and benefits of available regulatory alternatives and, when regulation is necessary, to select regulatory approaches that maximize net benefits (including potential economic, environmental, public health and safety effects, and other advantages; distributive impacts; and equity). Executive Order 13563 (Improving Regulation and Regulatory Review) emphasizes the importance of quantifying both costs and benefits, reducing costs, harmonizing rules, and promoting flexibility. The Office of Information and Regulatory Affairs has determined that this rule is not a significant regulatory action under Executive Order 12866. The Regulatory Impact Analysis associated with this rulemaking can be found as a supporting document at *www.regulations.gov.*

**Regulatory Flexibility Act**

The Secretary herby certifies that his final rule will not have a significant economic impact on a substantial number of small entities as they are defined in the Regulatory Flexibility Act (5 U.S.C. 601–612). This final rule is adopting changes in law that will directly affect only individuals by assisting such individuals in acquiring specially adapted housing grants and will not directly affect small entities. Therefore, pursuant to 5 U.S.C. 605(b), the initial and final regulatory flexibility analysis requirements of 5 U.S.C. 603 and 604 do not apply.

**Unfunded Mandates**

The Unfunded Mandates Reform Act of 1995 requires, at 2 U.S.C. 1532, that agencies prepare an assessment of anticipated costs and benefits before issuing any rule that may result in the expenditure by State, local, and tribal governments, in the aggregate, or by the private sector, of $100 million or more (adjusted annually for inflation) in any one year. This final rule will have no such effect on State, local, and tribal governments, or on the private sector.

**Paperwork Reduction Act**

This action contains provisions constituting collections of information at 38 CFR 36.4403, under the provisions of the Paperwork Reduction Act of 1995 (44 U.S.C. 3501–3521). The information collection requirements for § 36.4403 are currently approved by the Office of Management and Budget (OMB) and have been assigned OMB control number 2900–0132. Although no new collections of information are associated with this final rule, there will be an increase in the number of respondents associated with the already approved OMB control number. This rule will result in an increase of 111 estimated annual burden hours and an annual cost of $3,004.[1] As required by the Paperwork Reduction Act of 1995 (at 44 U.S.C. 3507(d)), VA will submit this information collection amendment to OMB for its review.

**Catalog of Federal Domestic Assistance**

The Catalog of Federal Domestic Assistance numbers and titles for the programs affected by this final rule are 64.106, Specially Adapted Housing For Disabled Veterans; 64.116, Vocational Rehabilitation for Disabled Veterans; 64.118, Veterans Housing Direct Loans for Certain Disabled Veterans.

**Congressional Review Act**

Pursuant to the Congressional Review Act (5 U.S.C. 801 *et seq.*), the Office of Information and Regulatory Affairs designated this rule as not a major rule, as defined by 5 U.S.C. 804(2).

**List of Subjects**

*38 CFR Part 3*

Administrative practice and procedure, Claims, Disability benefits, Health care, Pensions, Radioactive materials, Veterans, Vietnam.

*38 CFR Part 36*

Condominiums, Housing, Individuals with disabilities, Loan programs-housing and community development, Loan programs-Indians, Loan programs-veterans, Manufactured homes, Mortgage insurance, Veterans.

**Signing Authority**

Denis McDonough, Secretary of Veterans Affairs, approved this document on September 14, 2021, and authorized the undersigned to sign and submit the document to the Office of the Federal Register for publication electronically as an official document of the Department of Veterans Affairs.

**Jeffrey M. Martin,**

*Assistant Director, Office of Regulation Policy & Management, Office of the Secretary, Department of Veterans Affairs.*

For the reasons stated in the preamble, the Department of Veterans Affairs amends 38 CFR parts 3 and 36 as set forth below:

## PART 3—ADJUDICATION

### Subpart A—Pension, Compensation, and Dependency and Indemnity Compensation

■ 1. The authority citation for part 3, subpart A, continues to read as follows:

**Authority:** 38 U.S.C. 501(a), unless otherwise noted.

■ 2. Amend § 3.809 by revising paragraphs (a) and (b) to read as follows:

**§ 3.809 Specially adapted housing under 38 U.S.C. 2101(a)(2)(A)(i).**

* * * * *

(a) *General.* A member of the Armed Forces serving on active duty must have a disability that was incurred or aggravated in line of duty in active military, naval, or air service and meets the requirements described in paragraph (b) of this section. A veteran must be entitled to compensation under chapter 11 of title 38, United States Code, for a service-connected disability that meets the requirements described in paragraph (b) of this section.

(b) *Disability.* The disability must be rated as one of the following:

(1) A permanent and total disability due to the loss or loss of use of both lower extremities, such as to preclude locomotion without the aid of braces, crutches, canes, or a wheelchair.

(2) A permanent disability due to blindness in both eyes, having central visual acuity of 20/200 or less in the better eye with the use of a standard correcting lens. For the purposes of this paragraph (b)(2), an eye with a limitation in the fields of vision such that the widest diameter of the visual field subtends an angle no greater than 20 degrees shall be considered as having a central visual acuity of 20/200 or less.

(3) A permanent and total disability due to the loss or loss of use of one lower extremity together with residuals of organic disease or injury which so affect the functions of balance or propulsion as to preclude locomotion without the aid of braces, crutches, canes, or a wheelchair.

(4) A permanent and total disability due to the loss or loss of use of one

[1] VA estimates an additional 670 applications will be completed annually as a result of the provisions codified in this final rule. The incremental costs of this rule were calculated using an estimated time burden of 10 minutes to complete the information collection under 38 CFR 36.4403 (also known as VA Form 26–4555). Because VA cannot make further assumptions about the population of respondents (veterans with service-connected disabilities) because of the variability of factors such as the educational background and wage potential of respondents, VA used general wage data to estimate the respondents' costs associated with completing the information collection. The Bureau of Labor Statistics (BLS) gathers information on full-time wage and salary workers. According to the latest available BLS data (May 2020), the mean hourly wage is $27.07 based on the BLS wage code—''00–0000 All Occupations''. This information is taken from the following website: (*https://www.bls.gov/oes/current/oes_nat.htm#00-0000*).

lower extremity together with the loss or loss of use of one upper extremity which so affect the functions of balance or propulsion as to preclude locomotion without the aid of braces, crutches, canes, or a wheelchair.

(5) A permanent and total disability due to the loss or loss of use of both upper extremities such as to preclude use of the arms at or above the elbow.

(6) A permanent and total disability due to full thickness or subdermal burns that have resulted in contractures with limitation of motion of two or more extremities or of at least one extremity and the trunk.

* * * * *

■ 3. Amend § 3.809a by:

■ a. Removing paragraph (b)(2);

■ b. Redesignating paragraphs (b)(1) introductory text and (b)(1)(i), (ii), (iii), and (iv) as paragraphs (c) introductory text and (c)(1), (2), (3), and (4), respectively; and

■ c. Revising newly redesignated paragraph (b).

The revisions read as follows:

**§ 3.809a Special home adaptation grants under 38 U.S.C 2101(b).**

* * * * *

(b) A member of the Armed Forces serving on active duty must have a disability that was incurred or aggravated in line of duty in active military, naval, or air service and meets the requirements described in paragraph (c) of this section. A veteran must be entitled to compensation under chapter 11 of title 38, United States Code, for a disability that meets the requirements described in paragraph (c) of this section.

* * * * *

## PART 36—LOAN GUARANTY

■ 4. The authority citation for part 36 continues to read as follows:

**Authority:** 38 U.S.C. 501 and 3720.

**§ 36.4402 [Amended]**

■ 5. Amend § 36.4402 by removing in the last sentence of paragraph (d)(2) the word ''three'' and adding in its place ''six''.

**§ 36.4403 [Amended]**

■ 6. Amend § 36.4403 by removing the word ''three'' everywhere it appears and adding in its place ''six''.

■ 7. Amend § 36.4404 by:

■ a. Revising paragraphs (a)(1) introductory text, (a)(1)(i) and (ii), (a)(1)(iii) introductory text, and (a)(1)(iv) and (v);

■ b. Removing paragraph (a)(2)(i);

■ c. Redesignating paragraphs (a)(2)(ii) and (iii) as paragraphs (a)(2)(i) and (ii), respectively; and

■ d. Revising newly redesignated paragraph (a)(2)(ii).

The revisions read as follows:

**§ 36.4404 Eligibility for assistance.**

(a) * * *

(1) The 2101(a) grant is available to individuals with a service-connected disability who have been rated as being entitled to compensation under 38 U.S.C. chapter 11 for any of the following conditions:

(i) A permanent and total disability due to the loss, or loss of use, of both lower extremities so as to preclude locomotion without the aid of braces, crutches, canes, or a wheelchair;

(ii) A permanent disability due to blindness in both eyes having central visual acuity of 20/200 or less in the better eye with the use of a standard correcting lens. For the purposes of this paragraph (a)(1)(ii), an eye with a limitation in the fields of vision such that the widest diameter of the visual field subtends an angle no greater than 20 degrees shall be considered as having a central visual acuity of 20/200 or less;

(iii) A permanent and total disability due to the loss or loss of use of one lower extremity, together with—

* * * * *

(iv) A permanent and total disability due to the loss, or loss of use, of both upper extremities so as to preclude use of the arms at or above the elbows; or

(v) Any other permanent and total disability identified as eligible for assistance under 38 U.S.C. 2101(a).

(2) * * *

(ii) Any other injury identified as eligible for assistance under 38 U.S.C. 2101(b).

* * * * *

**§ 36.4406 [Amended]**

■ 8. Amend § 36.4406 by removing the word ''three'' in the last sentence of paragraph (a)(2) and adding in its place ''six''.

[FR Doc. 2021–21800 Filed 10–7–21; 8:45 am]

BILLING CODE 8320–01–P

# Proposed Rules

Federal Register
Vol. 86, No. 193
Friday, October 8, 2021

This section of the FEDERAL REGISTER contains notices to the public of the proposed issuance of rules and regulations. The purpose of these notices is to give interested persons an opportunity to participate in the rule making prior to the adoption of the final rules.

## DEPARTMENT OF TRANSPORTATION

### Federal Aviation Administration

### 14 CFR Part 39

**[Docket No. FAA–2021–0869; Project Identifier AD–2021–00176–E]**

**RIN 2120–AA64**

## Airworthiness Directives; General Electric Company Turbofan Engines

**AGENCY:** Federal Aviation Administration (FAA), DOT.

**ACTION:** Notice of proposed rulemaking (NPRM).

**SUMMARY:** The FAA proposes to adopt a new airworthiness directive (AD) for certain General Electric Company (GE) CF34–8C and CF34–8E model turbofan engines. This proposed AD was prompted by a report of a quality escape during the manufacturing of a high-pressure turbine (HPT) rotor stage 1 disk. This proposed AD would require removing the HPT rotor stage 1 disk from service and replacing the HPT rotor stage 1 disk with a part eligible for installation. The FAA is proposing this AD to the unsafe condition on these products.

**DATES:** The FAA must receive comments on this proposed AD by November 22, 2021.

**ADDRESSES:** You may send comments, using the procedures found in 14 CFR 11.43 and 11.45, by any of the following methods:

- *Federal eRulemaking Portal:* Go to *https://www.regulations.gov.* Follow the instructions for submitting comments.
- *Fax:* (202) 493–2251.
- *Mail:* U.S. Department of Transportation, Docket Operations, M–30, West Building Ground Floor, Room W12–140, 1200 New Jersey Avenue SE, Washington, DC 20590.
- *Hand Delivery:* Deliver to Mail address above between 9 a.m. and 5 p.m., Monday through Friday, except Federal holidays.

For service information identified in this NPRM, contact General Electric Company, 1 Neumann Way, Cincinnati, OH 45215; phone: (513) 552–3272; email: *aviation.fleetsupport@ae.ge.com;* website: *https://www.ge.com.* You may view this service information at the FAA, Airworthiness Products Section, Operational Safety Branch, 1200 District Avenue, Burlington, MA 01803. For information on the availability of this material at the FAA, call (781) 238–7759.

### Examining the AD Docket

You may examine the AD docket at *https://www.regulations.gov* by searching for and locating Docket No. FAA–2021–0869; or in person at Docket Operations between 9 a.m. and 5 p.m., Monday through Friday, except Federal holidays. The AD docket contains this NPRM, any comments received, and other information. The street address for Docket Operations is listed above.

**FOR FURTHER INFORMATION CONTACT:** Scott Stevenson, Aviation Safety Engineer, ECO Branch, FAA, 1200 District Avenue, Burlington, MA 01803; phone: (781) 238–7132; fax: (781) 238–7199; email: *Scott.M.Stevenson@faa.gov*.

**SUPPLEMENTARY INFORMATION:**

### Comments Invited

The FAA invites you to send any written relevant data, views, or arguments about this proposal. Send your comments to an address listed under **ADDRESSES**. Include ''Docket No. FAA–2021–0869; Project Identifier AD–2021–00176–E'' at the beginning of your comments. The most helpful comments reference a specific portion of the proposal, explain the reason for any recommended change, and include supporting data. The FAA will consider all comments received by the closing date and may amend this proposal because of those comments.

Except for Confidential Business Information (CBI) as described in the following paragraph, and other information as described in 14 CFR 11.35, the FAA will post all comments received, without change, to *https://www.regulations.gov,* including any personal information you provide. The agency will also post a report summarizing each substantive verbal contact received about this NPRM.

### Confidential Business Information

CBI is commercial or financial information that is both customarily and actually treated as private by its owner. Under the Freedom of Information Act (FOIA) (5 U.S.C. 552), CBI is exempt from public disclosure. If your comments responsive to this NPRM contain commercial or financial information that is customarily treated as private, that you actually treat as private, and that is relevant or responsive to this NPRM, it is important that you clearly designate the submitted comments as CBI. Please mark each page of your submission containing CBI as ''PROPIN.'' The FAA will treat such marked submissions as confidential under the FOIA, and they will not be placed in the public docket of this NPRM. Submissions containing CBI should be sent to Scott Stevenson, Aviation Safety Engineer, ECO Branch, FAA, 1200 District Avenue, Burlington, MA 01803. Any commentary that the FAA receives which is not specifically designated as CBI will be placed in the public docket for this rulemaking.

### Background

The FAA was notified by GE of a quality escape that occurred during the manufacturing of an HPT rotor stage 1 disk. The quality escape occurred at a supplier that began production in August 2019. On November 25, 2019, the supplier discovered tool gouges at the forward chamfer of the air holes in an HPT rotor stage 1 disk. These gouges can reduce the life of the HPT rotor stage 1 disk. This condition, if not addressed, could result in uncontained disk release, damage to the engine, and damage to the airplane.

### FAA's Determination

The FAA is issuing this NPRM after determining that the unsafe condition described previously is likely to exist or develop on other products of the same type design.

### Related Service Information

The FAA reviewed GE CF34–8C Alert Service Bulletin (ASB) 72–A0344 R01 and GE CF34–8E ASB 72–A0228 R01, both dated December 19, 2019. The ASBs describe procedures for removing the HPT rotor stage 1 disk. The FAA also reviewed GE Repair Document RD #150–1811–P1, dated March 17, 2020. This document describes procedures for repairing the HPT rotor stage 1 disk.

**Proposed AD Requirements in This NPRM**

This proposed AD would require removing a certain HPT rotor stage 1 disk from service and replacing the HPT rotor stage 1 disk with a part eligible for installation.

**Differences Between This Proposed AD and the Service Information**

The ASBs instruct operators to perform a visual inspection of the HPT rotor stage 1 disk and re-mark the HPT rotor stage 1 disk, while this proposed AD would not mandate visual inspection or re-marking. The ASBs also instruct operators to perform an inspection of the removed HPT rotor stage 1 disk and send it to an authorized service center for repair, while this proposed AD would require removal of the HPT rotor stage 1 disk from service and replacement with a part eligible for installation.

**Costs of Compliance**

The FAA estimates that this AD, if adopted as proposed, would affect 23 engines installed on airplanes of U.S. registry.

The FAA estimates the following costs to comply with this proposed AD:

ESTIMATED COSTS

| Action | Labor cost | Parts cost | Cost per product | Cost on U.S. operators |
|---|---|---|---|---|
| Remove and replace HPT rotor stage 1 disk | 812 work-hours × $85 per hour = $69,020 .... | $258,100 | $327,120 | $7,523,760 |

**Authority for This Rulemaking**

Title 49 of the United States Code specifies the FAA's authority to issue rules on aviation safety. Subtitle I, section 106, describes the authority of the FAA Administrator. Subtitle VII: Aviation Programs, describes in more detail the scope of the Agency's authority.

The FAA is issuing this rulemaking under the authority described in Subtitle VII, Part A, Subpart III, Section 44701: General requirements. Under that section, Congress charges the FAA with promoting safe flight of civil aircraft in air commerce by prescribing regulations for practices, methods, and procedures the Administrator finds necessary for safety in air commerce. This regulation is within the scope of that authority because it addresses an unsafe condition that is likely to exist or develop on products identified in this rulemaking action.

**Regulatory Findings**

The FAA determined that this proposed AD would not have federalism implications under Executive Order 13132. This proposed AD would not have a substantial direct effect on the States, on the relationship between the national government and the States, or on the distribution of power and responsibilities among the various levels of government.

For the reasons discussed above, I certify this proposed regulation:

(1) Is not a ''significant regulatory action'' under Executive Order 12866,

(2) Would not affect intrastate aviation in Alaska, and

(3) Would not have a significant economic impact, positive or negative, on a substantial number of small entities under the criteria of the Regulatory Flexibility Act.

**List of Subjects in 14 CFR Part 39**

Air transportation, Aircraft, Aviation safety, Incorporation by reference, Safety.

**The Proposed Amendment**

Accordingly, under the authority delegated to me by the Administrator, the FAA proposes to amend 14 CFR part 39 as follows:

## PART 39—AIRWORTHINESS DIRECTIVES

■ 1. The authority citation for part 39 continues to read as follows:

**Authority:** 49 U.S.C. 106(g), 40113, 44701.

**§ 39.13 [Amended]**

■ 2. The FAA amends § 39.13 by adding the following new airworthiness directive:

**General Electric Company:** Docket No. FAA–2021–0869; Project Identifier AD–2021–00176–E.

**(a) Comments Due Date**

The FAA must receive comments on this airworthiness directive (AD) by November 22, 2021.

**(b) Affected ADs**

None.

**(c) Applicability**

This AD applies to General Electric Company (GE) CF34–8C5, CF34–8C5B1, CF34–8E2, CF34–8E2A1, CF34–8E5, CF34–8E5A1, CF34–8E5A2, CF34–8E6, and CF34–8E6A1 model turbofan engines with an installed high-pressure turbine (HPT) rotor stage 1 disk, part number (P/N) 4125T22P04, and a serial number (S/N) listed in Figure 1 or Figure 2 to paragraph (c) of this AD.

BILLING CODE 4910–13–P

**Figure 1 to Paragraph (c) – HPT Rotor stage 1 disk, P/N 4125T22P04, installed on CF34-8C5 and CF34-8C5B1 engines**

| HPT Rotor Stage 1 Disk S/N |
|---|
| NCU1234C |
| NCU0180C |
| NCU0174C |
| NCU0183C |
| NCU6175C |
| NCU6174C |
| NCU7694C |
| GATJ8T64 |
| NCU7065C |
| NCU7068C |
| NCU6173C |
| NCU1232C |
| NCU7698C |
| GATJ8P5T |

**Figure 2 to Paragraph (c) – HPT Rotor stage 1 disk, P/N 4125T22P04, installed on CF34-8E2, CF34-8E2A1, CF34-8E5, CF34-8E5A1, CF34-8E5A2, CF34-8E6, and CF34-8E6A1 engines**

| HPT Rotor Stage 1 Disk S/N |
|---|
| GATJ8PJF |
| GATJ8P5R |
| NCU9014C |
| NCU9654A |
| GATJ903T |
| NCU8314C |
| GATJ8WK4 |
| NCU9785A |
| NCU1233C |
| NCU2151C |
| NCU7070C |
| NCU2920C |
| NCU7692C |
| NCU6171C |
| GATJ8TCF |
| GATJ8T63 |
| NCU8313C |

**(d) Subject**

Joint Aircraft System Component (JASC) Code 7250, Turbine Section.

**(e) Unsafe Condition**

This AD was prompted by a report of a quality escape during the manufacturing of an HPT rotor stage 1 disk. The FAA is issuing this AD to prevent failure of the HPT rotor stage 1 disk. The unsafe condition, if not addressed, could result in uncontained disk release, damage to the engine, and damage to the airplane.

**(f) Compliance**

Comply with this AD within the compliance times specified, unless already done.

**(g) Required Actions**

For all affected engines, at the next engine shop visit or before the HPT rotor stage 1 disk accumulates 7,600 cycles since new, whichever occurs first after the effective date of this AD, remove the HPT rotor stage 1 disk from service and replace with a part eligible for installation.

**(h) Definitions**

For the purpose of this AD:

(1) An ''engine shop visit'' is the induction of an engine into the shop for maintenance involving the separation of pairs of major mating engine flanges, except that the separation of engine flanges solely for the purposes of transportation without subsequent engine maintenance does not constitute an engine shop visit.

(2) A ''part eligible for installation'' is an HPT rotor stage 1 disk that is not listed in Figure 1 or Figure 2 to paragraph (c) of this AD or an HPT rotor stage 1 disk that has been repaired using an FAA-approved repair.

**Note 1 to paragraph (h)(2):** Guidance for repairing the HPT rotor stage 1 disk can be found in GE Repair Document RD # 150–1811–P1, dated March 17, 2020.

**(i) Alternative Methods of Compliance (AMOCs)**

(1) The Manager, ECO Branch, FAA, has the authority to approve AMOCs for this AD, if requested using the procedures found in 14 CFR 39.19. In accordance with 14 CFR 39.19, send your request to your principal inspector or local Flight Standards District Office, as appropriate. If sending information directly to the manager of the certification office, send it to the attention of the person identified in paragraph (j)(1) of this AD. Information may be emailed to: *ANE-AD-AMOC@faa.gov.*

(2) Before using any approved AMOC, notify your appropriate principal inspector, or lacking a principal inspector, the manager of the local flight standards district office/certificate holding district office.

**(j) Related Information**

(1) For more information about this AD, contact Scott Stevenson, Aviation Safety Engineer, ECO Branch, FAA, 1200 District Avenue, Burlington, MA 01803; phone: (781) 238–7132; fax: (781) 238–7759; email: *Scott.M.Stevenson@faa.gov.*

(2) For service information identified in this AD, contact General Electric Company, 1 Neumann Way, Cincinnati, OH 45215; phone: (513) 552–3272; email: *aviation.fleetsupport@ae.ge.com;* website: *https://www.ge.com.* You may view this referenced service information at the FAA, Airworthiness Products Section, 1200 District Avenue, Burlington, MA 01803. For information on the availability of this material at the FAA, call (781) 238–7759.

Issued on September 30, 2021.

**Lance T. Gant,**

*Director, Compliance & Airworthiness Division, Aircraft Certification Service.*

[FR Doc. 2021–21905 Filed 10–7–21; 8:45 am]

**BILLING CODE 4910–13–C**

## DEPARTMENT OF TRANSPORTATION

## Federal Aviation Administration

## 14 CFR Part 39

**[Docket No. FAA–2021–0872; Project Identifier MCAI–2021–00312–R]**

**RIN 2120–AA64**

## Airworthiness Directives; Airbus Helicopters

**AGENCY:** Federal Aviation Administration (FAA), DOT.

**ACTION:** Notice of proposed rulemaking (NPRM).

**SUMMARY:** The FAA proposes to supersede Airworthiness Directive (AD) 2020–11–05, which applies to all Airbus Helicopters Model EC120B helicopters. AD 2020–11–05 requires repetitive inspections of the tail rotor (TR) hub body for cracks and applicable corrective actions if necessary, and repetitive replacement of the attachment bolts, washers, and nuts of the TR hub body. This proposed AD would retain certain requirements of AD 2020–11–05, add repetitive inspections, require additional corrective actions, and update applicable service information. The FAA is proposing this AD to address the unsafe condition on these products.

**DATES:** The FAA must receive comments on this proposed AD by November 22, 2021.

**ADDRESSES:** You may send comments, using the procedures found in 14 CFR 11.43 and 11.45, by any of the following methods:

- *Federal eRulemaking Portal:* Go to *https://www.regulations.gov.* Follow the instructions for submitting comments.
- *Fax:* (202) 493–2251.
- *Mail:* U.S. Department of Transportation, Docket Operations, M–30, West Building Ground Floor, Room W12–140, 1200 New Jersey Avenue SE, Washington, DC 20590.
- *Hand Delivery:* Deliver to Mail address above between 9 a.m. and 5 p.m., Monday through Friday, except Federal holidays.

For service information identified in this NPRM, contact Airbus Helicopters, 2701 North Forum Drive, Grand Prairie, TX 75052; telephone (972) 641–0000 or (800) 232–0323; fax (972) 641–3775; or at *https://www.airbus.com/helicopters/services/technical-support.html.* You may view this service information at the FAA, Office of the Regional Counsel, Southwest Region, 10101 Hillwood Pkwy., Room 6N–321, Fort Worth, TX 76177. For information on the availability of this material at the FAA, call (817) 222–5110.

**Examining the AD Docket**

You may examine the AD docket at *https://www.regulations.gov* by searching for and locating Docket No. FAA–2021–0872; or in person at Docket Operations between 9 a.m. and 5 p.m., Monday through Friday, except Federal holidays. The AD docket contains this NPRM, the European Union Aviation Safety Agency (EASA) AD, any comments received, and other information. The street address for Docket Operations is listed above.

**FOR FURTHER INFORMATION CONTACT:** Andrea Jimenez, Aerospace Engineer, COS Program Management Section, Operational Safety Branch, Compliance & Airworthiness Division, FAA, 1600 Stewart Ave., Suite 410, Westbury, NY 11590; telephone (516) 228–7330; email *andrea.jimenez@faa.gov.*

**SUPPLEMENTARY INFORMATION:**

**Comments Invited**

The FAA invites you to send any written relevant data, views, or arguments about this proposal. Send your comments to an address listed under **ADDRESSES**. Include ''Docket No. FAA–2021–0872; Project Identifier MCAI–2021–00312–R'' at the beginning of your comments. The most helpful comments reference a specific portion of the proposal, explain the reason for any recommended change, and include supporting data. The FAA will consider all comments received by the closing date and may amend this proposal because of those comments.

Except for Confidential Business Information (CBI) as described in the following paragraph, and other information as described in 14 CFR 11.35, the FAA will post all comments received, without change, to *https://www.regulations.gov,* including any personal information you provide. The agency will also post a report summarizing each substantive verbal contact received about this NPRM.

**Confidential Business Information**

CBI is commercial or financial information that is both customarily and actually treated as private by its owner. Under the Freedom of Information Act (FOIA) (5 U.S.C. 552), CBI is exempt from public disclosure. If your comments responsive to this NPRM contain commercial or financial information that is customarily treated as private, that you actually treat as private, and that is relevant or responsive to this NPRM, it is important that you clearly designate the submitted comments as CBI. Please mark each

page of your submission containing CBI as ''PROPIN.'' The FAA will treat such marked submissions as confidential under the FOIA, and they will not be placed in the public docket of this NPRM. Submissions containing CBI should be sent to Andrea Jimenez, Aerospace Engineer, COS Program Management Section, Operational Safety Branch, Compliance & Airworthiness Division, FAA, 1600 Stewart Ave., Suite 410, Westbury, NY 11590; telephone (516) 228–7330; email *andrea.jimenez@faa.gov.* Any commentary that the FAA receives which is not specifically designated as CBI will be placed in the public docket for this rulemaking.

**Background**

The FAA issued AD 2020–11–05, Amendment 39–21130 (85 FR 31042, May 22, 2020) (AD 2020–11–05), for Airbus Helicopters Model EC120B helicopters, all serial numbers. AD 2020–11–05 requires repetitive inspections of the TR hub body for cracks and applicable corrective actions if necessary, and repetitive replacement of the attachment bolts, washers, and nuts of the TR hub body. AD 2020–11–05 was prompted by EASA AD 2019–0272R1, dated November 18, 2019 (EASA AD 2019–0272R1), issued by EASA, which is the Technical Agent for the Member States of the European Union, to correct an unsafe condition for Airbus Helicopters, formerly Eurocopter, Eurocopter France, Model EC120 B helicopters. EASA advised that an inspection of the TR hub body revealed a recurring loss of tightening torque on several attachment bolts. This condition, if not addressed, could result in cracking and potential loss of the TR drive and consequent loss of yaw control of the helicopter.

Accordingly, EASA AD 2019–0272R1 required repetitive inspections of the TR hub body for cracks and applicable corrective actions if necessary, as well as repetitive replacement of the associated attachment bolts, washers, and nuts.

**Actions Since AD 2020–11–05 Was Issued**

Since the FAA issued AD 2020–11–05, EASA issued AD 2021–0069, dated March 11, 2021 (EASA AD 2021–0069), which supersedes EASA AD 2019–0272R1. EASA advises that further detailed analysis showed that a loss of tightening torque in the interface between the TR hub body and splined flange creates the risk of crack initiation from a fretting area located on the TR hub body and splined flange or on the TR hub body and flange bolts. Accordingly, EASA AD 2021–0069 retains the requirements of EASA AD 2019–0272R1 and requires additional repetitive detailed inspections of the interface between the TR hub body part number (P/N) C642A0100103 and the splined flange. Depending on the inspection results, EASA AD 2021–0069 requires accomplishment of applicable corrective actions.

**FAA's Determination**

These helicopters have been approved by EASA and are approved for operation in the United States. Pursuant to the FAA's bilateral agreement with the European Union, EASA has notified the FAA about the unsafe condition described in its AD. The FAA is proposing this AD after evaluating all known relevant information and determining that the unsafe condition described previously is likely to exist or develop on other helicopters of the same type designs.

**Related Service Information Under 1 CFR Part 51**

The FAA reviewed Airbus Helicopters Emergency Alert Service Bulletin 05A020, Revision 2, dated February 8, 2021 (ASB 05A020 Rev 2). This service information specifies procedures for repetitive inspections of the TR hub body for cracks and the TR spline flange for cracks and fretting and the appropriate corrective actions.

This service information is reasonably available because the interested parties have access to it through their normal course of business or by the means identified in the **ADDRESSES** section.

**Proposed AD Requirements in This NPRM**

This proposed AD would retain some of the requirements of AD 2020–11–05, and would require, within 15 hours time-in-service (TIS) or 7 days, whichever occurs first, performing repetitive inspections of the TR hub body for a crack and depending on the inspection results, removing the affected parts from service. This proposed AD would also require inspecting the TR spline flange for corrosion, impacts, fretting, wear, and a crack and depending on the inspection results, removing the TR splined flange from service. For helicopters with 9,000 or more total hours TIS or with unknown total hours TIS, this proposed AD would require, within 15 hours TIS or 7 days, whichever occurs first, and thereafter at intervals not to exceed 1,000 hours TIS, removing from service any bolt, washer, and nut installed on the TR hub body, replacing them with airworthy parts, inspecting the TR splined flange, and depending on the inspection results, removing the TR splined flange from service. This proposed AD would also require, for helicopters with less than 9,000 total hours TIS, within 1,000 hours TIS or before accumulating 9,000 total hours TIS, whichever occurs first, and thereafter at intervals not to exceed 1,000 hours TIS, removing from service any bolt, washer, and nut installed on the TR hub body replacing them with airworthy parts, inspecting the TR splined flange, and depending on the inspection results, removing the TR splined flange from service. This proposed AD would also prohibit the installation of a certain part-numbered TR hub body unless certain actions have been accomplished.

**Differences Between This Proposed AD and EASA AD 2021–0069**

EASA AD 2021–0069 uses flight hours (FH) for certain compliance times, whereas this proposed AD uses hours TIS. EASA AD 2021–0069 retains the compliance time of November 1, 2019 for certain actions, which is the effective date of EASA AD 2019–0272R1, whereas this proposed AD would require compliance as of the effective date of the proposed AD.

Where Note 1 of EASA AD 2021–0069 allows a non-cumulative tolerance of 100 hours TIS to be applied to the compliance times for the initial replacement of bolts, washers, and nuts (Table 1 of EASA AD 2021–0069) to allow for synchronization of the required inspections with other maintenance tasks, this proposed AD would not allow a non-cumulative tolerance of 100 hours TIS to be applied to the compliance times.

**Costs of Compliance**

The FAA estimates that this AD, if adopted as proposed, would affect 89 helicopters of U.S. Registry. Labor rates are estimated at $85 per work-hour. Based on these numbers, the FAA estimates the following costs to comply with this proposed AD.

Visually inspecting each TR hub body for a crack would take about 0.25 work-hour for an estimated cost of $22 per inspection and $1,958 for the U.S. fleet.

Visually inspecting each TR spline flange for corrosion, impacts, fretting, wear, and a crack would take about 0.25 work-hour for an estimated cost of $22 per inspection and $1,958 for the U.S. fleet.

Replacing a TR hub body would take about 2 work-hours and parts would cost about $16,417 for an estimated cost of $16,587 per TR hub body replacement.

Replacing a TR spline flange would take about 0.5 work-hour and parts would cost about $2,950 for an estimated cost of $2,993 per TR spline flange replacement.

Replacing a bolt, washer, and nut would take about 0.5 work-hour and parts would cost about $68 for an estimated cost of $111 per replacement.

## Authority for This Rulemaking

Title 49 of the United States Code specifies the FAA's authority to issue rules on aviation safety. Subtitle I, section 106, describes the authority of the FAA Administrator. Subtitle VII: Aviation Programs, describes in more detail the scope of the Agency's authority.

The FAA is issuing this rulemaking under the authority described in Subtitle VII, Part A, Subpart III, Section 44701: General requirements. Under that section, Congress charges the FAA with promoting safe flight of civil aircraft in air commerce by prescribing regulations for practices, methods, and procedures the Administrator finds necessary for safety in air commerce. This regulation is within the scope of that authority because it addresses an unsafe condition that is likely to exist or develop on products identified in this rulemaking action.

## Regulatory Findings

The FAA determined that this proposed AD would not have federalism implications under Executive Order 13132. This proposed AD would not have a substantial direct effect on the States, on the relationship between the national Government and the States, or on the distribution of power and responsibilities among the various levels of government.

For the reasons discussed, I certify this proposed regulation:

(1) Is not a ''significant regulatory action'' under Executive Order 12866,

(2) Would not affect intrastate aviation in Alaska, and

(3) Would not have a significant economic impact, positive or negative, on a substantial number of small entities under the criteria of the Regulatory Flexibility Act.

## List of Subjects in 14 CFR Part 39

Air transportation, Aircraft, Aviation safety, Incorporation by reference, Safety.

## The Proposed Amendment

Accordingly, under the authority delegated to me by the Administrator, the FAA proposes to amend 14 CFR part 39 as follows:

## PART 39—AIRWORTHINESS DIRECTIVES

■ 1. The authority citation for part 39 continues to read as follows:

**Authority:** 49 U.S.C. 106(g), 40113, 44701.

### § 39.13 [Amended]

■ 2. The FAA amends § 39.13 by:

■ a. Removing Airworthiness Directive 2020–11–05, Amendment 39–21130 (85 FR 31042, May 22, 2020); and

■ b. Adding the following new airworthiness directive:

**Airbus Helicopters:** Docket No. FAA–2021–0872; Project Identifier MCAI–2021–00312–R.

**(a) Comments Due Date**

The FAA must receive comments on this airworthiness directive (AD) action by November 22, 2021.

**(b) Affected ADs**

This AD replaces AD 2020–11–05, Amendment 39–21130 (85 FR 31042, May 22, 2020) (AD 2020–11–05).

**(c) Applicability**

This AD applies to Airbus Helicopters Model EC120B helicopters, certificated in any category, all serial numbers.

**(d) Subject**

Joint Aircraft Service Component (JASC) Code: 6400, Tail rotor system.

**(e) Unsafe Condition**

This AD was prompted by a report of recurrent loss of tightening torque on several attachment bolts on the tail rotor (TR) hub body. The FAA is issuing this AD to detect cracking and fretting, which if not addressed, could result in potential loss of the TR drive and consequent loss of yaw control of the helicopter.

**(f) Compliance**

Comply with this AD within the compliance times specified, unless already done.

**(g) Required Actions**

(1) Within 15 hours time-in-service (TIS) or 7 days, whichever occurs first after the effective date of this AD, and thereafter at intervals not to exceed 15 hours TIS, using a light source and mirror, visually inspect TR hub body part number (P/N) C642A0100103 for a crack in the entire inspection area depicted in Figure 1 of Airbus Helicopters Emergency Alert Service Bulletin 05A020 Revision 2, dated February 8, 2021 (ASB 05A020 Rev 2). If there is a crack, before further flight, perform the actions in paragraphs (g)(1)(i) and (ii) of this AD.

(i) Remove the TR hub body and each bolt, washer, and nut installed on the TR hub body from service and replace with airworthy parts.

(ii) Inspect the TR splined flange for corrosion, impacts, fretting, wear, and a crack in the areas identified in Figure 2 of this AD. If the condition of the part (including corrosion, impacts, fretting, wear, or cracks) exceeds the criteria as specified in Figure 1 of this AD, before further flight, remove the splined flange from service and replace with an airworthy part.

**Note 1 to paragraph (g)(1)(ii):** You may refer to ''Detailed Check—Splined Flange,'' Task 64–21–00, 6–5, Airbus Aircraft Maintenance Manual (AMM), dated October 15, 2020 which pertains to the TR splined flange inspection.

BILLING CODE 4910–13–P

**Figure 1 to paragraph (g)(1)(ii)** – *Inspection Criteria for Tail Rotor Splined Flange*

| **Location as specified in figure 2 to paragraph (g)(1)(ii) of this AD** | **Maximum damage, which causes replacement (E1, Dia. 2, Dia. 3, and Dia. 4 are shown in figure 2 to paragraph (g)(1)(ii) of this AD)** |
|---|---|
| Zone A | Scratch depth > 0.2 mm (0.008 in.).<br>Crack.<br>E1 < 2.75 mm (0.108 in.).<br>Dia. 3 > 6.02 mm (0.2371 in.).<br>Dia. 2 > 33.03 mm (1.3004 in.). |
| Zone B | Touch-up depth > 0.1 mm (0.004 in.).<br>Crack. |
| Zone C | Crack.<br>Scratch depth > 0.2 mm (0.008 in.). |
| Zone D [Dia. 4 = 14 mm +/- 0.1 mm (0.548; 0.555in.)] | Touch-up depth > 0.1 mm (0.004 in.).<br>Crack.<br>E1 < 2.75 mm (0.108 in.). |

**Figure 2 to paragraph (g)(1)(ii)** – *Inspection Areas of Tail Rotor Splined Flange*

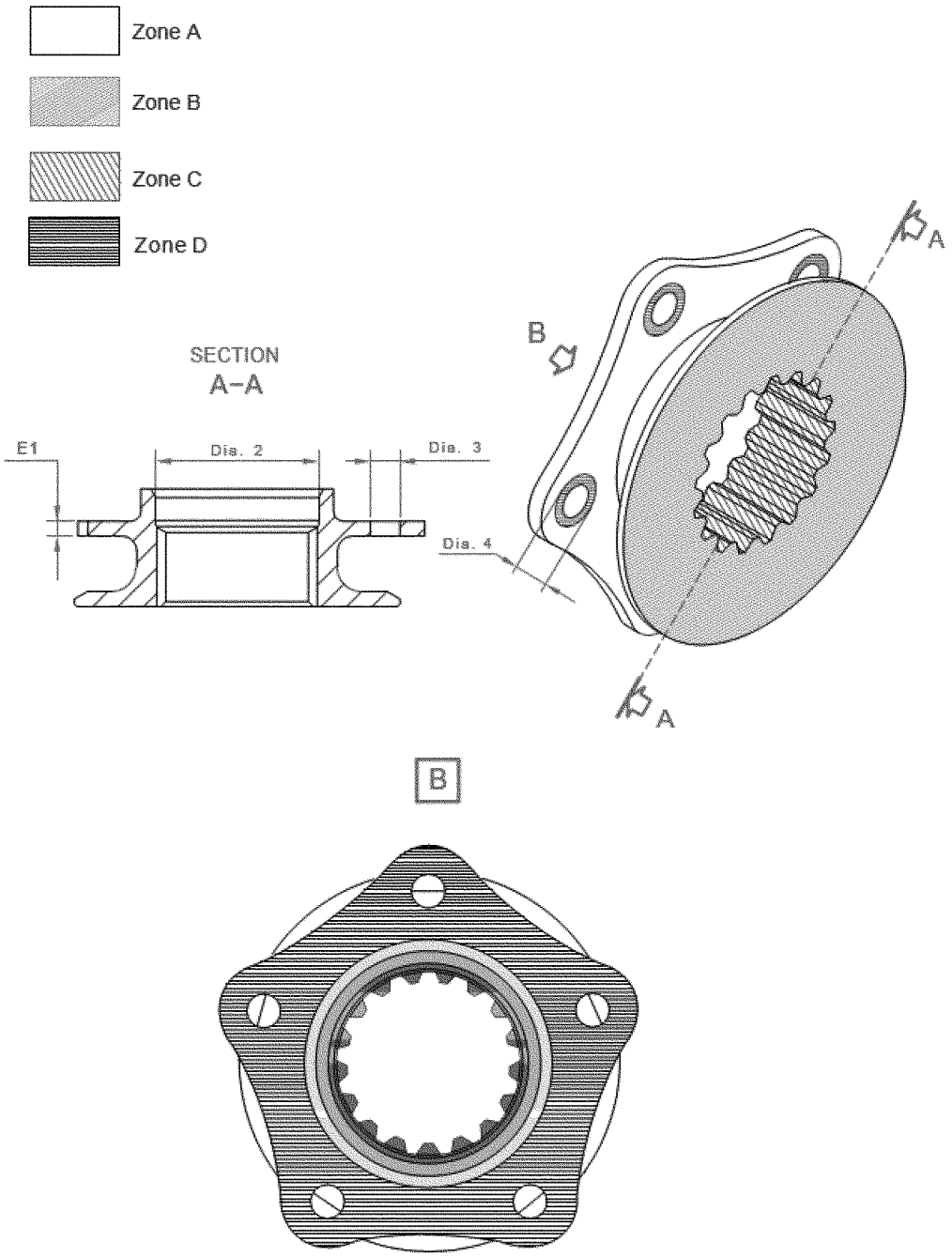


BILLING CODE 4910–13–C

(2) For helicopters with 9,000 or more total hours TIS, or with unknown total hours TIS, within 15 hours TIS or 7 days, whichever occurs first after the effective date of this AD, and thereafter at intervals not to exceed 1,000 hours TIS, remove each bolt, washer, and nut installed on the TR hub body from service and replace with airworthy parts and perform the actions in paragraph (g)(1)(ii) of this AD.

(3) For helicopters with less than 9,000 total hours TIS, within 1,000 hours TIS or before accumulating 9,000 total hours TIS, whichever occurs first after the effective date of this AD, and thereafter at intervals not to exceed 1,000 hours TIS, remove each bolt, washer, and nut installed on the TR hub body from service and replace with airworthy parts and perform the actions in paragraph (g)(1)(ii) of this AD.

(4) As of the effective date of this AD, do not install TR hub body P/N C642A0100103 on any helicopter, unless the actions of paragraph (g)(1) of this AD have been accomplished.

**(h) Special Flight Permits**

A special flight permit may be permitted provided that there are no passengers onboard.

**(i) Alternative Methods of Compliance (AMOCs)**

(1) The Manager, International Validation Branch, FAA, has the authority to approve AMOCs for this AD, if requested using the procedures found in 14 CFR 39.19. In accordance with 14 CFR 39.19, send your request to your principal inspector or local Flight Standards District Office, as appropriate. If sending information directly to the manager of the International Validation Branch, send it to the attention of the person identified in paragraph (j)(1) of this AD.

Information may be emailed to: *9-AVS-AIR-730-AMOC@faa.gov.*

(2) Before using any approved AMOC, notify your appropriate principal inspector, or lacking a principal inspector, the manager of the local flight standards district office/certificate holding district office.

**(j) Related Information**

(1) For more information about this AD, contact Andrea Jimenez, Aerospace Engineer, COS Program Management Section, Operational Safety Branch, Compliance & Airworthiness Division, FAA, 1600 Stewart Ave., Suite 410, Westbury, NY 11590; telephone (516) 228–7330; email *andrea.jimenez@faa.gov.*

(2) For service information identified in this AD, contact Airbus Helicopters, 2701 North Forum Drive, Grand Prairie, TX 75052; telephone (972) 641–0000 or (800) 232–0323; fax (972) 641–3775; or at *https://www.airbus.com/helicopters/services/technical-support.html.* You may view this referenced service information at the FAA, Office of the Regional Counsel, Southwest Region, 10101 Hillwood Pkwy., Room 6N–321, Fort Worth, TX 76177. For information on the availability of this material at the FAA, call (817) 222–5110.

(3) The subject of this AD is addressed in European Union Aviation Safety Agency (EASA) AD 2021–0069, dated March 11, 2021. You may view the EASA AD on the internet at *https://www.regulations.gov* in Docket No. FAA–2021–0872.

Issued on October 1, 2021.

**Lance T. Gant,**

*Director, Compliance & Airworthiness Division, Aircraft Certification Service.*

[FR Doc. 2021–21955 Filed 10–7–21; 8:45 am]

BILLING CODE 4910–13–P

## DEPARTMENT OF TRANSPORTATION

## Federal Aviation Administration

## 14 CFR Part 39

**[Docket No. FAA–2021–0842; Project Identifier 2019–CE–032–AD]**

**RIN 2120–AA64**

## Airworthiness Directives; Stemme AG Gliders

**AGENCY:** Federal Aviation Administration (FAA), DOT.

**ACTION:** Notice of proposed rulemaking (NPRM).

**SUMMARY:** The FAA proposes to adopt a new airworthiness directive (AD) for certain Stemme AG Model Stemme S 12 gliders. This proposed AD was prompted by mandatory continuing airworthiness information (MCAI) issued by the aviation authority of another country to identify and correct an unsafe condition on an aviation product. The MCAI describes the unsafe condition as the incorrect installation of an axle connecting the main landing gear (MLG) to the center steel frame. This proposed AD would require inspecting the MLG installation. The FAA is proposing this AD to address the unsafe condition on these products.

**DATES:** The FAA must receive comments on this proposed AD by November 22, 2021.

**ADDRESSES:** You may send comments, using the procedures found in 14 CFR 11.43 and 11.45, by any of the following methods:

- *Federal eRulemaking Portal:* Go to *https://www.regulations.gov.* Follow the instructions for submitting comments.
- *Fax:* (202) 493–2251.
- *Mail:* U.S. Department of Transportation, Docket Operations, M–30, West Building Ground Floor, Room W12–140, 1200 New Jersey Avenue SE, Washington, DC 20590.
- *Hand Delivery:* Deliver to Mail address above between 9 a.m. and 5 p.m., Monday through Friday, except Federal holidays.

For service information identified in this NPRM, contact STEMME AG, Flugplatzstrasse F2, Nr. 6–7, D–15344 Strausberg, Germany; phone: + 49 (0) 3341 3612–0, fax: + 49 (0) 3341 3612–30; email: *airworthiness@stemme.de;* website: *https://www.stemme.com.* You may view this service information at the FAA, Airworthiness Products Section, Operational Safety Branch, 901 Locust, Kansas City, MO 64106. For information on the availability of this material at the FAA, call (816) 329–4148.

### Examining the AD Docket

You may examine the AD docket at *https://www.regulations.gov* by searching for and locating Docket No. FAA–2021–0842; or in person at Docket Operations between 9 a.m. and 5 p.m., Monday through Friday, except Federal holidays. The AD docket contains this NPRM, the MCAI, any comments received, and other information. The street address for Docket Operations is listed above.

**FOR FURTHER INFORMATION CONTACT:** Jim Rutherford, Aviation Safety Engineer, General Aviation & Rotorcraft Section, International Validation Branch, FAA, 901 Locust, Room 301, Kansas City, MO 64106; phone: (816) 329–4165; fax: (816) 329–4090; email: *jim.rutherford@faa.gov.*

**SUPPLEMENTARY INFORMATION:**

### Comments Invited

The FAA invites you to send any written relevant data, views, or arguments about this proposal. Send your comments to an address listed under **ADDRESSES**. Include ''Docket No. FAA–2021–0842; Project Identifier 2019–CE–032–AD'' at the beginning of your comments. The most helpful comments reference a specific portion of the proposal, explain the reason for any recommended change, and include supporting data. The FAA will consider all comments received by the closing date and may amend this proposal because of those comments.

Except for Confidential Business Information (CBI) as described in the following paragraph, and other information as described in 14 CFR 11.35, the FAA will post all comments received, without change, to *https://www.regulations.gov,* including any personal information you provide. The agency will also post a report summarizing each substantive verbal contact received about this NPRM.

### Confidential Business Information

CBI is commercial or financial information that is both customarily and actually treated as private by its owner. Under the Freedom of Information Act (FOIA) (5 U.S.C. 552), CBI is exempt from public disclosure. If your comments responsive to this NPRM contain commercial or financial information that is customarily treated as private, that you actually treat as private, and that is relevant or responsive to this NPRM, it is important that you clearly designate the submitted comments as CBI. Please mark each page of your submission containing CBI as ''PROPIN.'' The FAA will treat such marked submissions as confidential under the FOIA, and they will not be placed in the public docket of this NPRM. Submissions containing CBI should be sent to Jim Rutherford, Aviation Safety Engineer, General Aviation & Rotorcraft Section, International Validation Branch, FAA, 901 Locust, Room 301, Kansas City, MO 64106. Any commentary that the FAA receives which is not specifically designated as CBI will be placed in the public docket for this rulemaking.

### Background

The European Union Aviation Safety Agency (EASA), which is the Technical Agent for the Member States of the European Union, has issued EASA AD 2019–0130–E, dated June 7, 2019 (referred to after this as ''the MCAI''), to address an unsafe condition on Stemme AG Model Stemme S 12 gliders. The MCAI states:

> Following a production acceptance flight, the pilot noticed that the aeroplane was in a banked position on the ground. Further examination determined that an axle, connecting the main landing gear (MLG) leg to the centre steel frame of the aeroplane, had

been installed incorrectly. Other S12 aeroplanes may also be affected by this installation error.

This condition, if not detected and corrected, could lead to damage to the aeroplane, possibly resulting in injury to occupants.

To address this unsafe condition, Stemme issued the SB [service bulletin] to provide inspection instructions.

For the reason described above, this [EASA] AD requires a one-time inspection of the MLG installation and, depending on findings, the accomplishment of applicable corrective action(s).

You may examine the MCAI in the AD docket at *https://www.regulations.gov* by searching for and locating Docket No. FAA–2021–0842.

## Related Service Information Under 1 CFR Part 51

The FAA reviewed Stemme Service Bulletin No. P062–980037, Revision 00, dated June 5, 2019 (SB P062–980037). The service information specifies inspecting and repairing, if necessary, the MLG leg connection to the center steel frame. This service information is reasonably available because the interested parties have access to it through their normal course of business or by the means identified in **ADDRESSES**.

## FAA's Determination

This product has been approved by the aviation authority of another country and is approved for operation in the United States. Pursuant to the FAA's bilateral agreement with this State of Design Authority, it has notified the FAA of the unsafe condition described in the MCAI and service information referenced above. The FAA is issuing this NPRM after determining the unsafe condition described previously is likely to exist or develop on other products of the same type design.

## Proposed AD Requirements in This NPRM

This proposed AD would require inspecting the MLG installation and, depending on the findings, further inspection of the components, surrounding structure, and systems for damage and repair.

## Differences Between This Proposed AD and the Service Information

SB P062–980037 allows the pilot/owner to perform the initial inspection for correct installation, and this proposed AD would not. SB P062–980037 specifies contacting Stemme AG for certain repair instructions, while this proposed AD would require repair using a method approved by the FAA or EASA.

## Costs of Compliance

The FAA estimates that this AD, if adopted as proposed, would affect 11 gliders of U.S. registry. The FAA estimates that it would take 0.5 work hour per glider to inspect the MLG installation. The average labor rate is $85 per work hour. Based on these figures, the FAA estimates the cost to inspect the MLG installation on U.S. operators to be $467.50, or $42.50 per glider.

In addition, the FAA estimates that further inspection for damage of an improperly installed MLG would take about 4 work-hours costing $340 per glider. If any damage is found during this MLG inspection, it may vary considerably from glider to glider, and the FAA has no way of estimating a repair cost.

The FAA has included all known costs in its cost estimate. According to the manufacturer, however, some of the costs of this AD may be covered under warranty, thereby reducing the cost impact on affected operators.

## Authority for This Rulemaking

Title 49 of the United States Code specifies the FAA's authority to issue rules on aviation safety. Subtitle I, section 106, describes the authority of the FAA Administrator. Subtitle VII: Aviation Programs, describes in more detail the scope of the Agency's authority.

The FAA is issuing this rulemaking under the authority described in Subtitle VII, Part A, Subpart III, Section 44701: General requirements. Under that section, Congress charges the FAA with promoting safe flight of civil aircraft in air commerce by prescribing regulations for practices, methods, and procedures the Administrator finds necessary for safety in air commerce. This regulation is within the scope of that authority because it addresses an unsafe condition that is likely to exist or develop on products identified in this rulemaking action.

## Regulatory Findings

The FAA determined that this proposed AD would not have federalism implications under Executive Order 13132. This proposed AD would not have a substantial direct effect on the States, on the relationship between the national government and the States, or on the distribution of power and responsibilities among the various levels of government.

For the reasons discussed above, I certify this proposed regulation:

(1) Is not a ''significant regulatory action'' under Executive Order 12866,

(2) Would not affect intrastate aviation in Alaska, and

(3) Would not have a significant economic impact, positive or negative, on a substantial number of small entities under the criteria of the Regulatory Flexibility Act.

## List of Subjects in 14 CFR Part 39

Air transportation, Aircraft, Aviation safety, Incorporation by reference, Safety.

## The Proposed Amendment

Accordingly, under the authority delegated to me by the Administrator, the FAA proposes to amend 14 CFR part 39 as follows:

## PART 39—AIRWORTHINESS DIRECTIVES

■ 1. The authority citation for part 39 continues to read as follows:

**Authority:** 49 U.S.C. 106(g), 40113, 44701.

### § 39.13 [Amended]

■ 2. The FAA amends § 39.13 by adding the following new airworthiness directive:

**Stemme AG:** Docket No. FAA–2021–0842; Project Identifier 2019–CE–032–AD.

**(a) Comments Due Date**

The FAA must receive comments on this airworthiness directive (AD) by November 22, 2021.

**(b) Affected ADs**

None.

**(c) Applicability**

This AD applies to Stemme AG Model Stemme S 12 gliders, serial numbers 12–002 through 12–026, inclusive, certificated in any category.

**(d) Subject**

Joint Aircraft System Component (JASC) Code 3200, Landing Gear System.

**(e) Unsafe Condition**

This AD was prompted by mandatory continuing airworthiness information (MCAI) issued by the aviation authority of another country to identify and correct an unsafe condition on an aviation product. The MCAI describes the unsafe condition as incorrect installation of an axle connecting the main landing gear (MLG) to the center steel frame of the glider. The FAA is issuing this AD to prevent failure of the MLG. The unsafe condition, if not addressed, could result in damage to the glider and possible injury to occupants.

**(f) Compliance**

Comply with this AD within the compliance times specified, unless already done.

**(g) Required Actions**

(1) Before further flight after the effective date of this AD, visually inspect the MLG

left-hand and right-hand legs for proper installation as depicted in Figure 3 of Stemme Service Bulletin No. P062–980037, Revision 00, dated June 5, 2019 (SB P062–980037).

(2) If the MLG installation is not as depicted in Figure 3 of SB P062–980037, before further flight, inspect the MLG installation for damage in accordance with the Actions section, Action 2, in SB P062–980037, except you are not required to contact Stemme if there is damage. Instead, repair any damage using a method approved by the FAA or the European Union Aviation Safety Agency (EASA).

**(h) Alternative Methods of Compliance (AMOCs)**

(1) The Manager, International Validation Branch, FAA, has the authority to approve AMOCs for this AD, if requested using the procedures found in 14 CFR 39.19. In accordance with 14 CFR 39.19, send your request to your principal inspector or local Flight Standards District Office, as appropriate. If sending information directly to the manager of the certification office, send it to the attention of the person identified in paragraph (i)(1) of this AD or email: *9-AVS-AIR-730-AMOC@faa.gov.*

(2) Before using any approved AMOC, notify your appropriate principal inspector, or lacking a principal inspector, the manager of the local flight standards district office/ certificate holding district office.

**(i) Related Information**

(1) For more information about this AD, contact Jim Rutherford, Aviation Safety Engineer, General Aviation & Rotorcraft Section, International Validation Branch, FAA, 901 Locust, Room 301, Kansas City, MO 64106; phone: (816) 329–4165; fax: (816) 329–4090; email: *jim.rutherford@faa.gov.*

(2) Refer to EASA AD 2019–0130–E, dated June 7, 2019, for more information. You may examine the EASA AD in the AD docket at *https://www.regulations.gov* by searching for and locating it in Docket No. FAA–2021–0842.

(3) For service information identified in this AD, contact STEMME AG, Flugplatzstrasse F2, Nr. 6–7, D–15344 Strausberg, Germany; phone: +49 (0) 3341 3612–0, fax: +49 (0) 3341 3612–30; email: *airworthiness@stemme.de;* website: *https://www.stemme.com.* You may view this service information at the FAA, Airworthiness Products Section, Operational Safety Branch, 901 Locust, Kansas City, MO 64106. For information on the availability of this material at the FAA, call (816) 329–4148.

Issued on September 30, 2021.

**Lance T. Gant,**

*Director, Compliance & Airworthiness Division, Aircraft Certification Service.*

[FR Doc. 2021–21934 Filed 10–7–21; 8:45 am]

BILLING CODE 4910–13–P

## DEPARTMENT OF TRANSPORTATION

## Federal Aviation Administration

## 14 CFR Part 39

**[Docket No. FAA–2021–0218; Project Identifier MCAI–2020–01519–A]**

**RIN 2120–AA64**

## Airworthiness Directives; Pilatus Aircraft Ltd. Airplanes

**AGENCY:** Federal Aviation Administration (FAA), DOT.

**ACTION:** Notice of proposed rulemaking (NPRM).

**SUMMARY:** The FAA proposes to adopt a new airworthiness directive (AD) for certain Pilatus Aircraft Ltd. (Pilatus) Model PC–24 airplanes. This proposed AD results from mandatory continuing airworthiness information (MCAI) originated by an aviation authority of another country to identify and correct an unsafe condition on an aviation product. The MCAI describes the unsafe condition as insufficient performance of the fuel drain system that could lead to fire and damage of the airplane. This proposed AD would require modifying the fuel drain pipe routing and installing a drain mast. The FAA is proposing this AD to address the unsafe condition on these products.

**DATES:** The FAA must receive comments on this proposed AD by November 22, 2021.

**ADDRESSES:** You may send comments, using the procedures found in 14 CFR 11.43 and 11.45, by any of the following methods:

- *Federal eRulemaking Portal:* Go to *https://www.regulations.gov.* Follow the instructions for submitting comments.
- *Fax:* (202) 493–2251.
- *Mail:* U.S. Department of Transportation, Docket Operations, M–30, West Building Ground Floor, Room W12 140, 1200 New Jersey Avenue SE, Washington, DC 20590.
- *Hand Delivery:* Deliver to Mail address above between 9 a.m. and 5 p.m., Monday through Friday, except Federal holidays.
- For service information identified in this NPRM, contact Pilatus Aircraft Ltd., CH–6371, Stans, Switzerland; phone: +41 848 24 7 365; email: *techsupport.ch@pilatus-aircraft.com;* website: *https://www.pilatus-aircraft.com.* You may view this service information at the FAA, Airworthiness Products Section, Operational Safety Branch, 901 Locust, Kansas City, MO 64106. For information on the availability of this material at the FAA, call (816) 329–4148.

**Examining the AD Docket**

You may examine the AD docket at *https://www.regulations.gov* by searching for and locating Docket No. FAA–2021–0218; or in person at Docket Operations between 9 a.m. and 5 p.m., Monday through Friday, except Federal holidays. The AD docket contains this NPRM, the MCAI, any comments received, and other information. The street address for Docket Operations is listed above.

**FOR FURTHER INFORMATION CONTACT:** Doug Rudolph, Aviation Safety Engineer, FAA, General Aviation & Rotorcraft Section, International Validation Branch, 901 Locust, Room 301, Kansas City, MO 64106; phone: (816) 329–4059; fax: (816) 329–4090; email: *doug.rudolph@faa.gov.*

**SUPPLEMENTARY INFORMATION:**

**Comments Invited**

The FAA invites you to send any written relevant data, views, or arguments about this proposal. Send your comments to an address listed under the **ADDRESSES** section. Include ''Docket No. FAA–2021–0218; Project Identifier MCAI–2020–01519–A'' at the beginning of your comments. The most helpful comments reference a specific portion of the proposal, explain the reason for any recommended change, and include supporting data. The FAA will consider all comments received by the closing date and may amend this NPRM because of those comments.

Except for Confidential Business Information (CBI) as described in the following paragraph, and other information as described in 14 CFR 11.35, the FAA will post all comments received, without change, to *https://www.regulations.gov,* including any personal information you provide. The agency will also post a report summarizing each substantive verbal contact received about this NPRM.

**Confidential Business Information**

CBI is commercial or financial information that is both customarily and actually treated as private by its owner. Under the Freedom of Information Act (FOIA) (5 U.S.C. 552), CBI is exempt from public disclosure. If your comments responsive to this NPRM contain commercial or financial information that is customarily treated as private, that you actually treat as private, and that is relevant or responsive to this NPRM, it is important that you clearly designate the submitted comments as CBI. Please mark each page of your submission containing CBI as ''PROPIN.'' The FAA will treat such marked submissions as confidential

under the FOIA, and they will not be placed in the public docket of this AD. Submissions containing CBI should be sent to Doug Rudolph, Aviation Safety Engineer, FAA, General Aviation & Rotorcraft Section, International Validation Branch, 901 Locust, Room 301, Kansas City, MO 64106. Any commentary that the FAA receives which is not specifically designated as CBI will be placed in the public docket for this rulemaking.

## Background

The European Union Aviation Safety Agency (EASA), which is the Technical Agent for the Member States of the European Union, has issued EASA AD 2020–0252, dated November 12, 2020 (referred to after this as ''the MCAI''), to address the unsafe condition on these products. The MCAI states:

> An occurrence was reported where an insufficient performance of the fuel drain system was detected on certain PC–24 aeroplanes.
>
> This condition, if not corrected, could lead, in case of a fuel leak, to contamination of the inboard rear fuselage, creating a fuel vapour which, in combination with an ignition source, could possibly result in a fire and consequent damage to the aeroplane.
>
> To address this potential unsafe condition, Pilatus Aircraft issued the [service bulletin] SB providing instructions to modify the fuel drain pipe routing and to install a drain mast.
>
> For the reason described above, this [EASA] AD requires modification of the fuel drain system.

You may examine the MCAI at *https://www.regulations.gov* by searching for and locating Docket No. FAA–2021–0218.

## Related Service Information Under 1 CFR Part 51

The FAA reviewed Pilatus PC–24 Service Bulletin No. 28–003, Revision 1, dated January 23, 2020 (Pilatus SB 28–003R1). This service information specifies procedures for modifying the fuel drain pipe routing and installing a drain mast.

This service information is reasonably available because the interested parties have access to it through their normal course of business or by the means identified in the **ADDRESSES** section.

## FAA's Determination

This product has been approved by the aviation authority of another country, and is approved for operation in the United States. Pursuant to the FAA's bilateral agreement with this State of Design Authority, it has notified us of the unsafe condition described in the MCAI and service information referenced above. The FAA is issuing this NPRM after determining that the unsafe condition described previously is likely to exist or develop on other products of the same type design.

## Proposed AD Requirements in This NPRM

This proposed AD would require accomplishing the actions described in the service information previously.

## Costs of Compliance

The FAA estimates that this AD, if adopted as proposed, would affect 36 airplanes of U.S. registry. The FAA also estimates that it would take about 12 work-hours per airplane to do the modification and installation of this proposed AD. The average labor rate is $85 per work-hour. Required parts would cost about $1,950 per product.

Based on these figures, the FAA estimates the cost of the proposed AD on U.S. operators would be $106,920 or $2,970 per airplane.

The FAA has included all known costs in its cost estimate. According to the manufacturer, however, some of the costs of this proposed AD may be covered under warranty, thereby reducing the cost impact on affected operators.

## Authority for This Rulemaking

Title 49 of the United States Code specifies the FAA's authority to issue rules on aviation safety. Subtitle I, section 106, describes the authority of the FAA Administrator. Subtitle VII: Aviation Programs, describes in more detail the scope of the Agency's authority.

The FAA is issuing this rulemaking under the authority described in Subtitle VII, Part A, Subpart III, Section 44701: General requirements. Under that section, Congress charges the FAA with promoting safe flight of civil aircraft in air commerce by prescribing regulations for practices, methods, and procedures the Administrator finds necessary for safety in air commerce. This regulation is within the scope of that authority because it addresses an unsafe condition that is likely to exist or develop on products identified in this rulemaking action.

## Regulatory Findings

The FAA determined that this proposed AD would not have federalism implications under Executive Order 13132. This proposed AD would not have a substantial direct effect on the States, on the relationship between the national Government and the States, or on the distribution of power and responsibilities among the various levels of government.

For the reasons discussed above, I certify this proposed regulation:

(1) Would not be a ''significant regulatory action'' under Executive Order 12866,

(2) Would not affect intrastate aviation in Alaska, and

(3) Would not have a significant economic impact, positive or negative, on a substantial number of small entities under the criteria of the Regulatory Flexibility Act.

## List of Subjects in 14 CFR Part 39

Air transportation, Aircraft, Aviation safety, Incorporation by reference, Safety.

## The Proposed Amendment

Accordingly, under the authority delegated to me by the Administrator, the FAA proposes to amend 14 CFR part 39 as follows:

# PART 39—AIRWORTHINESS DIRECTIVES

■ 1. The authority citation for part 39 continues to read as follows:

**Authority:** 49 U.S.C. 106(g), 40113, 44701.

### § 39.13 [Amended]

■ 2. The FAA amends § 39.13 by adding the following new airworthiness directive:

**Pilatus Aircraft Ltd.:** Docket No. FAA–2021–0218; Project Identifier MCAI–2020–01519–A.

**(a) Comments Due Date**

The FAA must receive comments on this airworthiness directive (AD) by November 22, 2021.

**(b) Affected ADs**

None.

**(c) Applicability**

This AD applies to Pilatus Aircraft Ltd. Model PC–24 airplanes, serial numbers 101 through 184, certificated in any category.

**(d) Subject**

Joint Aircraft System Component (JASC) Code 2830, Fuel Dump System.

**(e) Reason**

This AD was prompted by mandatory continuing airworthiness information (MCAI) originated by an aviation authority of another country to identify and correct an unsafe condition on an aviation product. The MCAI describes the unsafe condition as insufficient performance of the fuel drain system that could lead to fire and damage of the airplane. The FAA is issuing this AD to prevent fuel contamination of the inboard rear fuselage. If not addressed, this unsafe condition, in combination with an ignition source, could result in fire and loss of control of the airplane.

**(f) Compliance**

Comply with this AD within the compliance times specified, unless already done.

**(g) Required Actions**

Within 5 months after the effective date of this AD, modify the fuel drain pipe routing and install the drain mast by following paragraphs A. and B. of the Accomplishment Instructions in Pilatus PC–24 Service Bulletin No. 28–003, Revision 1, dated January 23, 2020.

**(h) Alternative Methods of Compliance (AMOCs)**

(1) The Manager, International Validation Branch, FAA, has the authority to approve AMOCs for this AD, if requested using the procedures found in 14 CFR 39.19. In accordance with 14 CFR 39.19, send your request to your principal inspector or local Flight Standards District Office, as appropriate. If sending information directly to the manager of the certification office, send it to the attention of the person identified in paragraph (i)(1) of this AD or email: *9-AVS-AIR-730-AMOC@faa.gov.*

(2) Before using any approved AMOC, notify your appropriate principal inspector, or lacking a principal inspector, the manager of the local flight standards district office/ certificate holding district office.

**(i) Related Information**

(1) For more information about this AD, contact Doug Rudolph, Aviation Safety Engineer, General Aviation & Rotorcraft Section, FAA, General Aviation & Rotorcraft Section, International Validation Branch, 901 Locust, Room 301, Kansas City, MO 64106; phone: (816) 329–4059; fax: (816) 329–4090; email: *doug.rudolph@faa.gov.*

(2) Refer to MCAI European Union Aviation Safety Agency AD 2020–0252, dated November 12, 2020, for related information. You may examine the MCAI at *https://www.regulations.gov* by searching for and locating Docket No. FAA–2021–0218.

(3) For service information related to this AD, contact Pilatus Aircraft Ltd., Customer Support General Aviation, CH–6371 Stans, Switzerland; phone: +41 848 24 7 365; email: *techsupport.ch@pilatus-aircraft.com;* website: *https://www.pilatus-aircraft.com.* You may review this referenced service information at the FAA, Airworthiness Products Section, Operational Safety Branch, 901 Locust, Kansas City, MO 64106. For information on the availability of this material at the FAA, call (816) 329–4148.

Issued on September 30, 2021.

**Lance T. Gant,**

*Director, Compliance & Airworthiness Division, Aircraft Certification Service.*

[FR Doc. 2021–21937 Filed 10–7–21; 8:45 am]

BILLING CODE 4910–13–P

## DEPARTMENT OF TRANSPORTATION

## Federal Aviation Administration

## 14 CFR Part 39

**[Docket No. FAA–2021–0871; Project Identifier MCAI–2020–01581–A]**

**RIN 2120–AA64**

## Airworthiness Directives; Vulcanair S.p.A. Airplanes

**AGENCY:** Federal Aviation Administration (FAA), DOT.

**ACTION:** Notice of proposed rulemaking (NPRM).

**SUMMARY:** The FAA proposes to adopt a new airworthiness directive (AD) for certain Vulcanair S.p.A. Models P.68C, P.68C–TC, P.68 ''OBSERVER,'' P.68 OBSERVER 2, P.68R, and P.68TC OBSERVER airplanes. This proposed AD was prompted by mandatory continuing airworthiness information (MCAI) originated by an aviation authority of another country to identify and correct an unsafe condition on an aviation product. The MCAI describes the unsafe condition as a damaged stabilator trim control cable. This proposed AD would require inspecting the stabilator trim control cables and replacing if necessary. This proposed AD would also require reporting the results of each inspection to Vulcanair S.p.A. The FAA is proposing this AD to address the unsafe condition on these products.

**DATES:** The FAA must receive comments on this proposed AD by November 22, 2021.

**ADDRESSES:** You may send comments, using the procedures found in 14 CFR 11.43 and 11.45, by any of the following methods:

- *Federal eRulemaking Portal:* Go to *https://www.regulations.gov.* Follow the instructions for submitting comments.
- *Fax:* (202) 493–2251.
- *Mail:* U.S. Department of Transportation, Docket Operations, M–30, West Building Ground Floor, Room W12 140, 1200 New Jersey Avenue SE, Washington, DC 20590.
- *Hand Delivery:* Deliver to Mail address above between 9 a.m. and 5 p.m., Monday through Friday, except Federal holidays.

For service information identified in this NPRM, contact Vulcanair S.p.A., Fulvio Oloferni, via Giovanni Pascoli, 7, Naples, 80026, Italy; phone: +39 081 5918 135; email: *airworthiness@vulcanair.com;* website: *www.vulcanair.com.* You may view this service information at the FAA, Airworthiness Products Section, Operational Safety Branch, 901 Locust, Kansas City, MO 64106. For information on the availability of this material at the FAA, call (816) 329–4148.

### Examining the AD Docket

You may examine the AD docket at *https://www.regulations.gov* by searching for and locating Docket No. FAA–2021–0871; or in person at Docket Operations between 9 a.m. and 5 p.m., Monday through Friday, except Federal holidays. The AD docket contains this NPRM, the MCAI, any comments received, and other information. The street address for Docket Operations is listed above.

**FOR FURTHER INFORMATION CONTACT:** Gregory Johnson, Aviation Safety Engineer, FAA, General Aviation & Rotorcraft Section, International Validation Section, 901 Locust, Room 301, Kansas City, MO 64106–2641; phone: (720) 626–5462; email: *gregory.johnson@faa.gov.*

**SUPPLEMENTARY INFORMATION:**

### Comments Invited

The FAA invites you to send any written relevant data, views, or arguments about this proposal. Send your comments to an address listed under the **ADDRESSES** section. Include ''Docket No. FAA–2021–0871; Project Identifier MCAI–2020–01581–A'' at the beginning of your comments. The most helpful comments reference a specific portion of the proposal, explain the reason for any recommended change, and include supporting data. The FAA will consider all comments received by the closing date and may amend the proposal because of those comments.

Except for Confidential Business Information (CBI) as described in the following paragraph, and other information as described in 14 CFR 11.35, the FAA will post all comments received, without change, to *https://www.regulations.gov,* including any personal information you provide. The agency will also post a report summarizing each substantive verbal contact received about this proposed AD.

### Confidential Business Information

CBI is commercial or financial information that is both customarily and actually treated as private by its owner. Under the Freedom of Information Act (FOIA) (5 U.S.C. 552), CBI is exempt from public disclosure. If your comments responsive to this NPRM contain commercial or financial information that is customarily treated as private, that you actually treat as private, and that is relevant or responsive to this NPRM, it is important

that you clearly designate the submitted comments as CBI. Please mark each page of your submission containing CBI as ''PROPIN.'' The FAA will treat such marked submissions as confidential under the FOIA, and they will not be placed in the public docket of this NPRM. Submissions containing CBI should be sent to Gregory Johnson, Aviation Safety Engineer, FAA, General Aviation & Rotorcraft Section, International Validation Section, 901 Locust, Room 301, Kansas City, MO 64106–2641. Any commentary that the FAA receives which is not specifically designated as CBI will be placed in the public docket for this rulemaking.

## Background

The European Union Aviation Safety Agency (EASA), which is the Technical Agent for the Member States of the European Union, has issued EASA AD 2020–0262, dated November 30, 2020 (referred to after this as ''the MCAI''), to address an unsafe condition on certain serial-numbered Vulcanair S.p.A. Models P.68R, P.68C, P.68C–TC, P.68 ''OBSERVER,'' P.68 ''OBSERVER 2,'' and P.68TC ''OBSERVER'' airplanes. The MCAI states:

> Two occurrences have been reported of finding a damaged stabilator trim control cable connected to the stabilator trim actuator assembly, mounted on fuselage frame No.16. The related technical investigation concluded that the cause of the damage is a design issue.
>
> This condition, if not detected and corrected, could lead to failure of an affect [sic] part, preventing trim surface control (remaining in the last position), possibly resulting in reduced control of the aeroplane.
>
> To address this potential unsafe condition, and pending a design improvement, Vulcanair published the [service bulletin] SB, to provide inspection instructions for detecting damage.
>
> For the reasons described above, this [EASA] AD requires repetitive inspections of the affected parts, and, depending on findings, replacement.
>
> This [EASA] AD is considered to be an interim action and further [EASA] AD action may follow.

You may examine the MCAI in the AD docket at *https://www.regulations.gov* by searching for and locating Docket No. FAA–2021–0871.

## Related Service Information Under 1 CFR Part 51

The FAA reviewed Vulcanair S.p.A. P.68 Variants Mandatory Service Bulletin No. 263, dated October 20, 2020. The service information contains procedures for repetitively inspecting each stabilator trim control cable part number 5.6067–1, 5.6161–1, 5.6171–1, 5.6231–2, or 5.6231–4 for broken wires and replacing the cable if necessary. This service information is reasonably available because the interested parties have access to it through their normal course of business or by the means identified in the **ADDRESSES** section.

## FAA's Determination

This product has been approved by the aviation authority of another country and is approved for operation in the United States. Pursuant to the FAA's bilateral agreement with this State of Design Authority, it has notified the FAA of the unsafe condition described in the MCAI and service information referenced above. The FAA is issuing this NPRM after determining the unsafe condition described previously is likely to exist or develop on other products of the same type design.

## Proposed AD Requirements

This proposed AD would require accomplishing the actions specified in the service information already described. This proposed AD would also require reporting inspection results to the manufacturer.

## Interim Action

The FAA considers this proposed AD an interim action. The inspection reports that would be required by this proposed AD will enable the manufacturer to obtain better insight into the nature, cause, and extent of the damage, and eventually to develop final action to address the unsafe condition. Once final action has been identified, the FAA might consider further rulemaking.

## Costs of Compliance

The FAA estimates that this AD, if adopted as proposed, would affect 127 airplanes of U.S. registry.

The FAA estimates the following costs to comply with this proposed AD:

ESTIMATED COSTS

| Action | Labor cost | Parts cost | Cost per product | Cost on U.S. operators |
|---|---|---|---|---|
| Inspection | 0.50 work-hour × $85 per hour = $42.50 per inspection cycle. | $0 | $42.50 per inspection cycle | $5,397.50 per inspection cycle. |
| Report | 1 work-hour × $85 per hour = $85 per reporting cycle. | 0 | $85 per inspection cycle | $10,795 per inspection cycle. |

The FAA estimates the following costs to do any replacements that would be required based on the results of the proposed inspection. The FAA has no way of determining the number of airplanes that might need this replacement:

ON-CONDITION COSTS

| Action | Labor cost | Parts cost | Cost per product |
|---|---|---|---|
| Replacement | 2 work-hours × $85 per hour = $170 | $340 | $510 |

## Paperwork Reduction Act

A federal agency may not conduct or sponsor, and a person is not required to respond to, nor shall a person be subject to a penalty for failure to comply with a collection of information subject to the requirements of the Paperwork Reduction Act unless that collection of information displays a currently valid OMB Control Number. The OMB Control Number for this information collection is 2120–0056. Public reporting for this collection of information is estimated to be approximately 1 hour per response, including the time for reviewing instructions, searching existing data

sources, gathering and maintaining the data needed, completing and reviewing the collection of information. All responses to this collection of information are mandatory. Send comments regarding this burden estimate or any other aspect of this collection of information, including suggestions for reducing this burden to: Information Collection Clearance Officer, Federal Aviation Administration, 10101 Hillwood Parkway, Fort Worth, TX 76177–1524.

## Authority for This Rulemaking

Title 49 of the United States Code specifies the FAA's authority to issue rules on aviation safety. Subtitle I, section 106, describes the authority of the FAA Administrator. Subtitle VII: Aviation Programs, describes in more detail the scope of the Agency's authority.

The FAA is issuing this rulemaking under the authority described in Subtitle VII, Part A, Subpart III, Section 44701: General requirements. Under that section, Congress charges the FAA with promoting safe flight of civil aircraft in air commerce by prescribing regulations for practices, methods, and procedures the Administrator finds necessary for safety in air commerce. This regulation is within the scope of that authority because it addresses an unsafe condition that is likely to exist or develop on products identified in this rulemaking action.

## Regulatory Findings

The FAA determined that this proposed AD would not have federalism implications under Executive Order 13132. This proposed AD would not have a substantial direct effect on the States, on the relationship between the national Government and the States, or on the distribution of power and responsibilities among the various levels of government.

For the reasons discussed above, I certify this proposed regulation:

(1) Is not a ''significant regulatory action'' under Executive Order 12866,

(2) Would not affect intrastate aviation in Alaska, and

(3) Would not have a significant economic impact, positive or negative, on a substantial number of small entities under the criteria of the Regulatory Flexibility Act.

## List of Subjects in 14 CFR Part 39

Air transportation, Aircraft, Aviation safety, Incorporation by reference, Safety.

## The Proposed Amendment

Accordingly, under the authority delegated to me by the Administrator, the FAA proposes to amend 14 CFR part 39 as follows:

## PART 39—AIRWORTHINESS DIRECTIVES

■ 1. The authority citation for part 39 continues to read as follows:

**Authority:** 49 U.S.C. 106(g), 40113, 44701.

### § 39.13 [Amended]

■ 2. The FAA amends § 39.13 by adding the following new airworthiness directive:

**Vulcanair S.p.A.:** Docket No. FAA–2021–0871; Project Identifier MCAI–2020–01581–A.

**(a) Comments Due Date**

The FAA must receive comments on this airworthiness directive (AD) by November 22, 2021.

**(b) Affected ADs**

None.

**(c) Applicability**

This AD applies to Vulcanair S.p.A. (Vulcanair) Models P.68C, P.68C–TC, P.68 ''OBSERVER,'' P.68 OBSERVER 2, P.68R, and P.68TC OBSERVER airplanes, serial numbers 333, 337 to 339 inclusive, 378, 379, and 383 and larger (except serial numbers 387 and 398), certificated in any category, with a stabilator trim control cable part number 5.6067–1, 5.6161–1, 5.6171–1, 5.6231–2, or 5.6231–4 installed.

**(d) Subject**

Joint Aircraft System Component (JASC) Code 2740, Stabilizer Control System.

**(e) Unsafe Condition**

This AD was prompted by a damaged stabilator trim control cable connected to the stabilator trim actuator assembly, mounted on fuselage frame No. 16. The FAA is issuing this AD to detect and address failure of a stabilator trim control cable, which could prevent trim surface control thereby leaving the cable remaining in the last position. The unsafe condition, if not addressed, could result in reduced control of the airplane.

**(f) Compliance**

Comply with this AD within the compliance times specified, unless already done.

**(g) Required Actions**

Before a stabilator trim control cable part number 5.6067–1, 5.6161–1, 5.6171–1, 5.6231–2, or 5.6231–4 accumulates more than 400 hours time-in-service (TIS) since first installation on an airplane or within 50 hours TIS after the effective date of this AD, whichever occurs later, and thereafter at intervals not to exceed 50 hours TIS, visually inspect the stabilator trim control cable for broken wires and replace the stabilator trim control cable before further flight if there is broken wire in a strand in accordance with steps 1 through 22 of Part 2 Work Procedure in Vulcanair S.p.A. P.68 Variants Mandatory Service Bulletin No. 263, dated October 20, 2020 (MSB 263).

**(h) Reporting**

Within 14 days after the initial inspection required by paragraph (g) of this AD or within 14 days after the effective date of this AD, whichever occurs later, report the results of the initial inspection to Vulcanair at *continued.airworthiness@vulcanaair.com* or at the address in paragraph (k)(3) of this AD. Thereafter, report the inspection results within 14 days after each inspection. Each report must include the following information:

(1) Owner/operator name, mailing address, phone number, and email address;

(2) Airplane model, serial number, and registration number;

(3) Airplane hours TIS at the time of the inspection;

(4) Stabilator trim control cable hours TIS at the time of the inspection;

(5) Date of the inspection;

(6) Inspection result (positive or negative); and

(7) A description of any non-conformity (damage).

**(i) Special Flight Permit**

Special flight permits are prohibited.

**(j) Alternative Methods of Compliance (AMOCs)**

(1) The Manager, International Validation Branch, FAA, has the authority to approve AMOCs for this AD, if requested using the procedures found in 14 CFR 39.19. In accordance with 14 CFR 39.19, send your request to your principal inspector or local Flight Standards District Office, as appropriate. If sending information directly to the manager of the certification office, send it to the attention of the person identified in paragraph (k)(1) of this AD or email *9-AVS-AIR-730-AMOC@faa.gov.*

(2) Before using any approved AMOC, notify your appropriate principal inspector, or lacking a principal inspector, the manager of the local flight standards district office/ certificate holding district office.

**(k) Related Information**

(1) For more information about this AD, contact Gregory Johnson, Aviation Safety Engineer, FAA, General Aviation & Rotorcraft Section, International Validation Section, 901 Locust, Room 301, Kansas City, MO 64106–2641; phone: (720) 626–5462; email: *gregory.johnson@faa.gov.*

(2) Refer to European Union Aviation Safety Agency (EASA) AD 2020–0262, dated November 30, 2020, for more information. You may examine the EASA AD in the AD docket at *https://www.regulations.gov* by searching for and locating it in Docket No. FAA–2021–0871.

(3) For service information identified in this AD, contact Vulcanair S.p.A., Fulvio Oloferni, via Giovanni Pascoli, 7, Naples, 80026, Italy; phone: +39 081 5918 135; email: *airworthiness@vulcanair.com;* website: *www.vulcanair.com.* You may view this referenced service information at the FAA, Airworthiness Products Section, Operational

Safety Branch, 901 Locust, Kansas City, MO 64106. For information on the availability of this material at the FAA, call (816) 329–4148.

Issued on October 1, 2021.

**Lance T. Gant,**

*Director, Compliance & Airworthiness Division, Aircraft Certification Service.*

[FR Doc. 2021–21938 Filed 10–7–21; 8:45 am]

**BILLING CODE 4910–13–P**

---

## DEPARTMENT OF TRANSPORTATION

## Federal Aviation Administration

## 14 CFR Part 39

**[Docket No. FAA–2021–0843; Project Identifier MCAI–2020–00256–Q]**

**RIN 2120–AA64**

## Airworthiness Directives; Umlaut Engineering GmbH (Previously P3 Engineering GmbH) HAFEX (Halon-Free) Hand-Held Fire Extinguishers

**AGENCY:** Federal Aviation Administration (FAA), DOT.

**ACTION:** Notice of proposed rulemaking (NPRM).

**SUMMARY:** The FAA proposes to adopt a new airworthiness directive (AD) for certain Umlaut Engineering GmbH (previously P3 Engineering GmbH) HAFEX (Halon-free) hand-held P3HAFEX fire extinguishers (fire extinguishers). This proposed AD was prompted by reports of a quality control issue on certain fire extinguishers, where the spindle geometries of the fire extinguishers were found to be out of tolerance. This proposed AD would require removing affected fire extinguishers from service. The FAA is proposing this AD to address the unsafe condition on these products.

**DATES:** The FAA must receive comments on this proposed AD by November 22, 2021.

**ADDRESSES:** You may send comments, using the procedures found in 14 CFR 11.43 and 11.45, by any of the following methods:

- *Federal eRulemaking Portal:* Go to *https://www.regulations.gov.* Follow the instructions for submitting comments.
- *Fax:* (202) 493–2251.
- *Mail:* U.S. Department of Transportation, Docket Operations, M–30, West Building Ground Floor, Room W12–140, 1200 New Jersey Avenue SE, Washington, DC 20590.
- *Hand Delivery:* Deliver to Mail address between 9 a.m. and 5 p.m., Monday through Friday, except Federal holidays.

For service information identified in this NPRM, contact Umlaut Engineering, Blohmstrasse 12, Hamburg, Germany 21079, Phone: 49 0 40 75 25 779 0, email: *hafex@umlaut.com,* or web: *https://www.umlaut.com/hafex.* You may view this service information at the FAA, Office of the Regional Counsel, Southwest Region, 10101 Hillwood Pkwy., Room 6N–321, Fort Worth, TX 76177. For information on the availability of this material at the FAA, call (817) 222–5110.

### Examining the AD Docket

You may examine the AD docket at *https://www.regulations.gov* by searching for and locating Docket No. FAA–2021–0843; or in person at Docket Operations between 9 a.m. and 5 p.m., Monday through Friday, except Federal holidays. The AD docket contains this NPRM, the European Union Aviation Safety Agency (EASA) AD, any comments received, and other information. The street address for Docket Operations is listed above.

**FOR FURTHER INFORMATION CONTACT:** Andrea Jimenez, Aerospace Engineer, COS Program Management Section, Operational Safety Branch, Compliance & Airworthiness Division, FAA, 1600 Stewart Ave., Suite 410, Westbury, NY 11590; telephone (516) 228–7330; email *andrea.jimenez@faa.gov.*

**SUPPLEMENTARY INFORMATION:**

### Comments Invited

The FAA invites you to send any written relevant data, views, or arguments about this proposal. Send your comments to an address listed under **ADDRESSES**. Include ''Docket No. FAA–2021–0843; Project Identifier MCAI–2020–00256–Q'' at the beginning of your comments. The most helpful comments reference a specific portion of the proposal, explain the reason for any recommended change, and include supporting data. The FAA will consider all comments received by the closing date and may amend this proposal because of those comments.

Except for Confidential Business Information (CBI) as described in the following paragraph, and other information as described in 14 CFR 11.35, the FAA will post all comments received, without change, to *https://www.regulations.gov,* including any personal information you provide. The agency will also post a report summarizing each substantive verbal contact received about this NPRM.

### Confidential Business Information

CBI is commercial or financial information that is both customarily and actually treated as private by its owner. Under the Freedom of Information Act (FOIA) (5 U.S.C. 552), CBI is exempt from public disclosure. If your comments responsive to this NPRM contain commercial or financial information that is customarily treated as private, that you actually treat as private, and that is relevant or responsive to this NPRM, it is important that you clearly designate the submitted comments as CBI. Please mark each page of your submission containing CBI as ''PROPIN.'' The FAA will treat such marked submissions as confidential under the FOIA, and they will not be placed in the public docket of this NPRM. Submissions containing CBI should be sent to Andrea Jimenez, Aerospace Engineer, COS Program Management Section, Operational Safety Branch, Compliance & Airworthiness Division, FAA, 1600 Stewart Ave., Suite 410, Westbury, NY 11590; telephone (516) 228–7330; email *andrea.jimenez@faa.gov.* Any commentary that the FAA receives which is not specifically designated as CBI will be placed in the public docket for this rulemaking.

### Background

EASA, which is the Technical Agent for the Member States of the European Union, has issued EASA AD 2020–0013, dated January 29, 2020 (EASA AD 2020–0013), to correct an unsafe condition for Airbus Helicopters Model AS 332 C, C1, L, L1, and L2, AS 365 N2 and N3, EC 155 B and B1, EC 175 B, EC 225 LP, SA 330 J, and SA 365 C1, C2, C3, N, and N1 helicopters; Airbus Helicopters Deutschland GmbH Model EC135 P1, P2, P2+, P3, T1, T2, T2+, and T3, EC635 P2+, P3, T1, T2+, and T3, and MBB–BK117 A–1, A–3, A–4, B–1, B–2, C–1, C–2, and D–2 helicopters; Leonardo S.p.A. Model AB139, AB 204B, AB 205 A–1, AB 212, AB 412, AB 412EP, AS–61N, AS–61N1, AW139, AW169, and AW189 helicopters; and WSK PZL—ŚWIDNIK S.A. Model PZL W–3A and PZL W–3AS helicopters. EASA advises of occurrences that have been reported of a quality issue on certain fire extinguishers, manufactured by Umlaut Engineering GmbH (formerly P3 Engineering GmbH), where the spindle geometries of the extinguishers were found to be out of tolerance. The manufacturing defect identified in certain serial-numbered fire extinguisher part numbers (P/Ns) P3APP003010A and P3APP003010C with a manufacturing date of March 2019 through July 2019 inclusive, where prolonged exposure (12 hours or more) to high temperature conditions of more than 68 °C (154.4 °F) could cause a non-detectable seizure of the spindle that could cause the fire extinguisher to be inoperative. This condition, if not

addressed, could prevent proper extinguishing of a fire in the cabin, possibly resulting in damage to the helicopter and injury to the occupants.

Accordingly, EASA AD 2020–0013 requires replacing affected fire extinguishers and prohibits installing an affected fire extinguisher on any helicopter.

**FAA's Determination**

These products have been approved by EASA and are approved for operation in the United States. Pursuant to the FAA's bilateral agreement with the European Union, EASA has notified the FAA about the unsafe condition described in its AD. The FAA is proposing this AD after evaluating all known relevant information and determining that the unsafe condition described previously is likely to exist or develop on other products.

**Related Service Information Under 1 CFR Part 51**

The FAA reviewed Umlaut Vendor Service Bulletin Doc. No. P3VSB000001, Issue C, dated December 13, 2019 (VSB P3VSB000001). This service information specifies procedures for identifying P3HAFEX fire extinguisher P/Ns P3APP003010A and P3APP003010C, with a date of manufacture between March 2019 through July 2019, and an S/N listed in its Appendix 1, to determine if the fire extinguisher should be replaced. VSB P3VSB000001 also specifies procedures for removing, installing, and tracking affected P3HAFEX fire extinguishers.

This service information is reasonably available because the interested parties have access to it through their normal course of business or by the means identified in the **ADDRESSES** section.

**Proposed AD Requirements in This NPRM**

This proposed AD would require removing affected fire extinguishers from service and prohibit installing affected fire extinguishers on any aircraft.

**Differences Between This Proposed AD and the EASA AD**

EASA AD 2020–0013 is issued against various model helicopters and defines an affected part, whereas this proposed AD is an appliance AD action against affected fire extinguishers because the unsafe condition exists in the appliance itself and not in the installation of the appliance on certain aircraft. EASA AD 2020–0013 identifies some helicopter models that are affected by this unsafe condition that are not identified as possibly affected in this proposed AD because those model helicopters are not FAA type-certificated.

**Costs of Compliance**

The FAA estimates that this proposed AD affects 762 helicopters of U.S. Registry. Labor rates are estimated at $85 per work-hour. Based on these numbers, the FAA estimates that operators may incur the following costs in order to comply with this proposed AD.

Replacing a fire extinguisher would take about 0.25 work-hour and parts would cost about $1,200 for an estimated cost of $1,221 per fire extinguisher.

According to Umlaut Engineering GmbH service information, some of the costs of this proposed AD may be covered under warranty, thereby reducing the cost impact on affected individuals. The FAA does not control warranty coverage by Umlaut Engineering GmbH; accordingly, all costs are included in this cost estimate.

**Authority for This Rulemaking**

Title 49 of the United States Code specifies the FAA's authority to issue rules on aviation safety. Subtitle I, section 106, describes the authority of the FAA Administrator. Subtitle VII: Aviation Programs, describes in more detail the scope of the Agency's authority.

The FAA is issuing this rulemaking under the authority described in Subtitle VII, Part A, Subpart III, Section 44701: General requirements. Under that section, Congress charges the FAA with promoting safe flight of civil aircraft in air commerce by prescribing regulations for practices, methods, and procedures the Administrator finds necessary for safety in air commerce. This regulation is within the scope of that authority because it addresses an unsafe condition that is likely to exist or develop on products identified in this rulemaking action.

**Regulatory Findings**

The FAA determined that this proposed AD would not have federalism implications under Executive Order 13132. This proposed AD would not have a substantial direct effect on the States, on the relationship between the national Government and the States, or on the distribution of power and responsibilities among the various levels of government.

For the reasons discussed, I certify this proposed regulation:

(1) Is not a ''significant regulatory action'' under Executive Order 12866,

(2) Would not affect intrastate aviation in Alaska, and

(3) Would not have a significant economic impact, positive or negative, on a substantial number of small entities under the criteria of the Regulatory Flexibility Act.

**List of Subjects in 14 CFR Part 39**

Air transportation, Aircraft, Aviation safety, Incorporation by reference, Safety.

**The Proposed Amendment**

Accordingly, under the authority delegated to me by the Administrator, the FAA proposes to amend 14 CFR part 39 as follows:

## PART 39—AIRWORTHINESS DIRECTIVES

■ 1. The authority citation for part 39 continues to read as follows:

**Authority:** 49 U.S.C. 106(g), 40113, 44701.

**§ 39.13 [Amended]**

■ 2. The FAA amends § 39.13 by adding the following new airworthiness directive:

**Umlaut Engineering GmbH (previously P3 Engineering GmbH) HAFEX (Halon-free) Hand-Held Fire Extinguishers:** Docket No. FAA–2021–0843; Project Identifier MCAI–2020–00256–Q.

**(a) Comments Due Date**

The FAA must receive comments on this airworthiness directive (AD) by November 22, 2021.

**(b) Affected ADs**

None.

**(c) Applicability**

This AD applies to Umlaut Engineering GmbH (previously P3 Engineering GmbH) HAFEX (Halon-free) hand-held P3HAFEX fire extinguisher (fire extinguisher) part numbers P3APP003010A and P3APP003010C with a manufacturing date of March 2019 through July 2019 inclusive and with a serial number listed in Appendix 1 of Umlaut Vendor Service Bulletin Doc. No. P3VSB000001, Issue C, dated December, 13, 2019. These fire extinguishers may be installed on but not limited to the following aircraft certificated in any category:

(1) Airbus Helicopters Model AS332C, AS332C1, AS332L, AS332L1, AS332L2, AS–365N2, AS 365 N3, EC 155B, EC155B1, EC225LP, SA330J, SA–365C1, SA–365C2, SA–365N, and SA–365N1 helicopters;

(2) Airbus Helicopters Deutschland GmbH (AHD) Model EC135P1, EC135P2, EC135P2+, EC135P3, EC135T1, EC135T2, EC135T2+, EC135T3, MBB–BK117 A–1, MBB–BK117 A–3, MBB–BK117 A–4, MBB–BK117 B–1, MBB–BK117 B–2, MBB–BK117 C–1, MBB–BK117 C–2, and MBB–BK117 D–2 helicopters;

(3) Leonardo S.p.a. Model AB139, AB412, AB412 EP, AW139, AW169, and AW189 helicopters; and

(4) PZL Swidnik S.A Model PZL W–3A helicopters.

**(d) Subject**

Joint Aircraft Service Component (JASC) Code: 2622, Fire Bottle, Portable.

**(e) Unsafe Condition**

This AD defines the unsafe condition as a non-conforming fire extinguisher, which could prevent proper extinguishing of a fire in the cabin, and result in subsequent damage to the helicopter and injury to the occupants.

**(f) Compliance**

Comply with this AD within the compliance times specified, unless already done.

**(g) Required Actions**

(1) Within 12 months after the effective date of this AD, remove each fire extinguisher identified in the introductory text of paragraph (c) from service.

(2) As of the effective date of this AD, do not install a fire extinguisher identified in the introductory text of paragraph (c) of this AD on any aircraft.

**(h) Alternative Methods of Compliance (AMOCs)**

(1) The Manager, International Validation Branch, FAA, has the authority to approve AMOCs for this AD, if requested using the procedures found in 14 CFR 39.19. In accordance with 14 CFR 39.19, send your request to your principal inspector or local Flight Standards District Office, as appropriate. If sending information directly to the manager of the International Validation Branch, send it to the attention of the person identified in paragraph (i)(1) of this AD. Information may be emailed to: *9-AVS-AIR-730-AMOC@faa.gov.*

(2) Before using any approved AMOC, notify your appropriate principal inspector, or lacking a principal inspector, the manager of the local flight standards district office/certificate holding district office.

**(i) Related Information**

(1) For more information about this AD, contact Andrea Jimenez, Aerospace Engineer, COS Program Management Section, Operational Safety Branch, Compliance & Airworthiness Division, FAA, 1600 Stewart Ave., Suite 410, Westbury, NY 11590; telephone (516) 228–7330; email *andrea.jimenez@faa.gov.*

(2) For service information identified in this AD, contact Umlaut Engineering, Blohmstrasse 12, Hamburg, Germany 21079, Phone: 49 0 40 75 25 779 0, email: *hafex@umlaut.com,* or web: *https://www.umlaut.com/hafex.* You may view this referenced service information at the FAA, Office of the Regional Counsel, Southwest Region, 10101 Hillwood Pkwy., Room 6N–321, Fort Worth, TX 76177. For information on the availability of this material at the FAA, call (817) 222–5110.

(3) The subject of this AD is addressed in European Union Aviation Safety Agency (EASA) AD 2020–0013, dated January 29, 2020. You may view the EASA AD on the internet at *https://www.regulations.gov* in Docket No. FAA–2021–0843.

Issued on September 30, 2021.

**Lance T. Gant,**

*Director, Compliance & Airworthiness Division, Aircraft Certification Service.*

[FR Doc. 2021–21952 Filed 10–7–21; 8:45 am]

**BILLING CODE 4910–13–P**

---

## DEPARTMENT OF TRANSPORTATION

## Federal Aviation Administration

## 14 CFR Part 71

**[Docket No. FAA–2021–0811; Airspace Docket No. 19–AAL–60]**

**RIN 2120–AA66**

## Proposed Amendment to United States Area Navigation Route (RNAV) T–227; Fairbanks, AK

**AGENCY:** Federal Aviation Administration (FAA), DOT.

**ACTION:** Notice of proposed rulemaking (NPRM).

**SUMMARY:** This action proposes to amend United Stated Area Navigation (RNAV) route T–227 in the vicinity of Fairbanks, AK in support of a large and comprehensive T-route modernization project for the state of Alaska.

**DATES:** Comments must be received on or before November 22, 2021.

**ADDRESSES:** Send comments on this proposal to the U.S. Department of Transportation, Docket Operations, 1200 New Jersey Avenue SE, West Building Ground Floor, Room W12–140, Washington, DC 20590; telephone: 1 (800) 647–5527, or (202) 366–9826. You must identify FAA Docket No. FAA–2021–0811; Airspace Docket No. 19–AAL–60 at the beginning of your comments. You may also submit comments through the internet at *https://www.regulations.gov.*

FAA Order JO 7400.11F, Airspace Designations and Reporting Points, and subsequent amendments can be viewed online at *https://www.faa.gov/air_traffic/publications/.* For further information, you can contact the Rules and Regulations Group, Federal Aviation Administration, 800 Independence Avenue SW, Washington, DC 20591; telephone: (202) 267–8783. The Order is also available for inspection at the National Archives and Records Administration (NARA). For information on the availability of the Order at NARA, email: *fr.inspection@nara.gov* or go to *https://www.archives.gov/federal-register/cfr/ibr-locations.html.*

**FOR FURTHER INFORMATION CONTACT:** Christopher McMullin, Rules and Regulations Group, Office of Policy, Federal Aviation Administration, 800 Independence Avenue SW, Washington, DC 20591; telephone: (202) 267–8783.

**SUPPLEMENTARY INFORMATION:**

### Authority for This Rulemaking

The FAA's authority to issue rules regarding aviation safety is found in Title 49 of the United States Code. Subtitle I, Section 106 describes the authority of the FAA Administrator. Subtitle VII, Aviation Programs, describes in more detail the scope of the agency's authority. This rulemaking is promulgated under the authority described in Subtitle VII, Part A, Subpart I, Section 40103. Under that section, the FAA is charged with prescribing regulations to assign the use of the airspace necessary to ensure the safety of aircraft and the efficient use of airspace. This regulation is within the scope of that authority as it would expand the availability of RNAV in Alaska and improve the efficient flow of air traffic within the National Airspace System (NAS) by lessening the dependency on ground based navigation.

### Comments Invited

Interested parties are invited to participate in this proposed rulemaking by submitting such written data, views, or arguments as they may desire. Comments that provide the factual basis supporting the views and suggestions presented are particularly helpful in developing reasoned regulatory decisions on the proposal. Comments are specifically invited on the overall regulatory, aeronautical, economic, environmental, and energy-related aspects of the proposal.

Communications should identify both docket numbers (FAA Docket No. FAA–2021–0811; Airspace Docket No. 19–AAL–60) and be submitted in triplicate to the Docket Management Facility (see **ADDRESSES** section for address and phone number). You may also submit comments through the internet at *https://www.regulations.gov.*

Commenters wishing the FAA to acknowledge receipt of their comments on this action must submit with those comments a self-addressed, stamped postcard on which the following statement is made: ''Comments to FAA Docket No. FAA–2021–0811; Airspace Docket No. 19–AAL–60.'' The postcard will be date/time stamped and returned to the commenter.

All communications received on or before the specified comment closing date will be considered before taking action on the proposed rule. The proposal contained in this action may be changed in light of comments

received. All comments submitted will be available for examination in the public docket both before and after the comment closing date. A report summarizing each substantive public contact with FAA personnel concerned with this rulemaking will be filed in the docket.

**Availability of NPRM**

An electronic copy of this document may be downloaded through the internet at *https://www.regulations.gov.* Recently published rulemaking documents can also be accessed through the FAA's web page at *https://www.faa.gov/air_traffic/publications/airspace_amendments/.*

You may review the public docket containing the proposal, any comments received and any final disposition in person in the Dockets Office (see **ADDRESSES** section for address and phone number) between 9:00 a.m. and 5:00 p.m., Monday through Friday, except Federal holidays. An informal docket may also be examined during normal business hours at the office of the Western Service Center, Operations Support Group, Federal Aviation Administration, 2200 South 216th St., Des Moines, WA 98198.

**Availability and Summary of Documents for Incorporation by Reference**

This document proposes to amend FAA Order JO 7400.11F, Airspace Designations and Reporting Points, dated August 10, 2021, and effective September 15, 2021. FAA Order JO 7400.11F is publicly available as listed in the **ADDRESSES** section of this document. FAA Order JO 7400.11F lists Class A, B, C, D, and E airspace areas, air traffic service routes, and reporting points.

**Background**

In 2003, Congress enacted the Vision 100-Century of Aviation Reauthorization Act (Pub L. 108–176), which established a joint planning and development office in the FAA to manage the work related to the Next Generation Air Transportation System (NextGen). Today, NextGen is an ongoing FAA-led modernization of the nation's air transportation system to make flying safer, more efficient, and more predictable.

In support of NextGen, this proposal is part of a larger and comprehensive T-route modernization project in the state of Alaska. The project mission statement states: ''To modernize Alaska's Air Traffic Service route structure using satellite based navigation Development of new T-routes and optimization of existing T-routes will enhance safety, increase efficiency and access, and will provide en route continuity that is not subject to the restrictions associated with ground based airway navigation.'' As part of this project, the FAA evaluated the existing Colored Airway structure for: (a) Direct replacement (*i.e.,* overlay) with a T-route that offers a similar or lower Minimum En route Altitude (MEA) or Global Navigation Satellite System Minimum En route Altitude (GNSS MEA); (b) the replacement of the colored airway with a T-route in an optimized but similar geographic area, while retaining similar or lower MEA; or (c) removal with no route structure (T-route) restored in that area because the value was determined to be insignificant.

The aviation industry/users have indicated a desire for the FAA to transition the Alaskan en route navigation structure away from dependency on Non-Directional Beacons (NDB), and move to develop and improve the RNAV route structure. The FAA proposes to amend segments of RNAV route T–227. The amendments would include replacing the Port Heiden, AK, (PDN) NDB reporting point with WIXER, AR, waypoint (WP). The proposed amendment of these segments would provide for lower MEAs while also ensuring that the appropriate route criteria is met along the entire route.

**The Proposal**

The FAA is proposing an amendment to 14 CFR part 71 to amend RNAV route T–227 in the vicinity of Fairbanks, AK in support of a large and comprehensive T-route modernization project for the state of Alaska. The proposed route changes are described below.

*T–227:* T–227 currently extends from Shemya, AK, (SYA) VHF Omnidirectional Range Tactical Air Navigation (VORTAC) to Deadhorse, AK, (SCC) VHF Omnidirectional Range/Distance Measuring Equipment (VOR/DME). The FAA proposes to rename PDN to WIXER, AK, WP. The segment between WIXER, AK, WP and AMOTT, AK, WP would include three additional WPs (CULTI, FEDGI, and WEZZL) eliminating the use of the BATTY, AK, Fix on this route. Additionally, the FAA proposes to reroute the airway over PERZO, AK, WP to provide instrument approach connectivity to Fairbanks International Airport (PAFA) and route continuity with T–282. The rest of the route would remain unchanged.

United States Area Navigation Routes are published in paragraph 6011 of FAA Order JO 7400.11F dated August 10, 2021 and effective September 15, 2021, which is incorporated by reference in 14 CFR 71.1. The RNAV route listed in this document would be published subsequently in the Order.

FAA Order JO 7400.11, Airspace Designations and Reporting Points, is published yearly and effective on September 15.

**Regulatory Notices and Analyses**

The FAA has determined that this proposed regulation only involves an established body of technical regulations for which frequent and routine amendments are necessary to keep them operationally current. It, therefore: (1) Is not a ''significant regulatory action'' under Executive Order 12866; (2) is not a ''significant rule'' under Department of Transportation (DOT) Regulatory Policies and Procedures (44 FR 11034; February 26, 1979); and (3) does not warrant preparation of a regulatory evaluation as the anticipated impact is so minimal. Since this is a routine matter that will only affect air traffic procedures and air navigation, it is certified that this proposed rule, when promulgated, will not have a significant economic impact on a substantial number of small entities under the criteria of the Regulatory Flexibility Act.

**Environmental Review**

This proposal will be subject to an environmental analysis in accordance with FAA Order 1050.1F, ''Environmental Impacts: Policies and Procedures'' prior to any FAA final regulatory action.

**List of Subjects in 14 CFR Part 71**

Airspace, Incorporation by reference, Navigation (air).

**The Proposed Amendment**

In consideration of the foregoing, the Federal Aviation Administration proposes to amend 14 CFR part 71 as follows:

## PART 71—DESIGNATION OF CLASS A, B, C, D, AND E AIRSPACE AREAS; AIR TRAFFIC SERVICE ROUTES; AND REPORTING POINTS

■ 1. The authority citation for part 71 continues to read as follows:

**Authority:** 49 U.S.C. 106(f), 106(g); 40103, 40113, 40120; E.O. 10854, 24 FR 9565, 3 CFR, 1959–1963 Comp., p. 389.

**§ 71.1 [Amended]**

■ 2. The incorporation by reference in 14 CFR 71.1 of FAA Order JO 7400.11F, Airspace Designations and Reporting Points, dated August 10, 2021, and effective September 15, 2021, is amended as follows:

*Paragraph 6011 United States Area Navigation Routes.*

* * * * *

**T–227 Shemya, AK to Deadhorse, AK [Amended]**

| | | |
|---|---|---|
| SHEMYA, AK (SYA) | VORTAC | (Lat. 52°43′05.78″ N, long. 174°03′43.50″ E) |
| JANNT, AK | WP | (Lat. 52°04′17.88″ N, long. 178°15′37.23″ W) |
| BAERE, AK | WP | (Lat. 52°12′11.96″ N, long. 176°08′08.53″ W) |
| ALEUT, AK | WP | (Lat. 54°14′16.58″ N, long. 166°32′51.82″ W) |
| MORDI, AK | WP | (Lat. 54°52′49.87″ N, long. 165°03′15.24″ W) |
| GENFU, AK | WP | (Lat. 55°23′18.64″ N, long. 163°06′20.78″ W) |
| BINAL, AK | WP | (Lat. 55°45′59.99″ N, long. 161°59′56.43″ W) |
| WIXER, AK | WP | (Lat. 56°54′29.00″ N, long. 158°36′10.00″ W) |
| CULTI, AK | WP | (Lat. 58°15′11.91″ N, long. 156°31′19.57″ W) |
| FEDGI, AK | WP | (Lat. 59°30′10.87″ N, long. 154°14′14.80″ W) |
| WEZZL, AK | WP | (Lat. 59°53′13.86″ N, long. 152°24′12.63″ W) |
| AMOTT, AK | FIX | (Lat. 60°52′26.59″ N, long. 151°22′23.60″ W) |
| BIG LAKE, AK (BGQ) | VORTAC | (Lat. 61°34′09.96″ N, long. 149°58′01.77″ W) |
| GLOWS, AK | WP | (Lat. 64°26′15.88″ N, long. 148°15′17.88″ W) |
| PERZO, AK | WP | (Lat. 64°40′22.99″ N, long. 148°07′20.15″ W) |
| FAIRBANKS, AK (FAI) | VORTAC | (Lat. 64°48′00.25″ N, long. 148°00′43.11″ W) |
| DEADHORSE, AK (SCC) | VOR/DME | (Lat. 70°11′57.11″ N, long. 148°24′58.17″ W) |

* * * * *

Issued in Washington, DC, on September 30, 2021.

**Michael R. Beckles,**

*Acting Manager, Rules and Regulations Group.*

[FR Doc. 2021–21862 Filed 10–7–21; 8:45 am]

**BILLING CODE 4910–13–P**

## DEPARTMENT OF DEFENSE

## Department of the Army, Corps of Engineers

## 33 CFR Part 334

**[COE–2021–0005]**

## Elizabeth River, Naval Station Norfolk Deperming Station, Norfolk, VA; Restricted Area

**AGENCY:** U.S. Army Corps of Engineers, DoD.

**ACTION:** Notice of proposed rulemaking and request for comments.

**SUMMARY:** The U.S. Army Corps of Engineers (Corps) is proposing to establish a restricted area in the waters of the Elizabeth River surrounding the Naval Station Norfolk (NSN) Lambert's Point Deperming Station in Norfolk, Virginia. Naval Station Norfolk is the homeport of numerous ships and provides operational readiness support to the U.S. Atlantic Fleet with its facilities. The deperming station is located within the waters of the Elizabeth River and provides magnetic silencing services for military vessels. The proposed restricted area is in waters surrounding the existing facility immediately adjacent to the channel into Norfolk Harbor. The proposed restricted area is necessary to better protect underwater equipment, personnel, and vessels utilizing the facility by implementing a waterside security program.

**DATES:** Written comments must be submitted on or before November 8, 2021.

**ADDRESSES:** You may submit comments, identified by docket number COE–2021–0005, by any of the following methods:

*Federal eRulemaking Portal: http://www.regulations.gov.* Follow the instructions for submitting comments.

*Email: david.b.olson@usace.army.mil.* Include the docket number, COE–2021–0005, in the subject line of the message.

*Mail:* U.S. Army Corps of Engineers, Attn: CECW–CO–R (David B. Olson), 441 G Street NW, Washington, DC 20314–1000.

*Hand Delivery/Courier:* Due to security requirements, we cannot receive comments by hand delivery or courier.

*Instructions:* Direct your comments to docket number COE–2021–0005. All comments received will be included in the public docket without change and may be made available on-line at *http://www.regulations.gov,* including any personal information provided, unless the commenter indicates that the comment includes information claimed to be Confidential Business Information (CBI) or other information whose disclosure is restricted by statute. Do not submit information that you consider to be CBI, or otherwise protected, through *regulations.gov* or email. The *regulations.gov* website is an anonymous access system, which means we will not know your identity or contact information unless you provide it in the body of your comment. If you send an email directly to the Corps without going through *regulations.gov,* your email address will be automatically captured and included as part of the comment that is placed in the public docket and made available on the internet. If you submit an electronic comment, we recommend that you include your name and other contact information in the body of your comment and with any compact disk you submit. If we cannot read your comment because of technical difficulties and cannot contact you for clarification, we may not be able to consider your comment. Electronic comments should avoid the use of any special characters, any form of encryption, and be free of any defects or viruses.

*Docket:* For access to the docket to read comments received, go to *www.regulations.gov.* All documents in the docket are listed. Although listed in the index, some information is not publicly available, such as CBI or other information whose disclosure is restricted by statute. Certain other material, such as copyrighted material, is not placed on the internet and will be publicly available only in hard copy form.

**FOR FURTHER INFORMATION CONTACT:** Mr. David Olson, Headquarters, U.S. Army Corps of Engineers, Operations and Regulatory Community of Practice, Washington, DC at 202–761–4922.

**SUPPLEMENTARY INFORMATION:** Pursuant to its authorities in Section 7 of the Rivers and Harbors Act of 1917 (40 Stat. 266; 33 U.S.C. 1) and Chapter XIX of the Army Appropriations Act of 1919 (40 Stat. 892; 33 U.S.C. 3), the Corps of Engineers is proposing to amend its regulations at 33 CFR part 334 for the establishment of a new restricted area in the waters of the Elizabeth River at Naval Station Norfolk (NSN) in Norfolk, Virginia. In a memorandum dated February 14, 2020, the Department of the Navy requested that the Corps modify 33 CFR part 334 to establish a permanent restricted area in the waters

of the Elizabeth River surrounding the NSN Lambert's Point Deperming Station in Norfolk, Virginia.

NSN is the homeport of numerous ships and provides operational readiness support to the U.S. Atlantic Fleet with its facilities. The Department of the Navy's request is in response to the possible risks associated with the potential for unfettered access to the deperming station. The deperming station is located within the waters of the Elizabeth River and provides magnetic silencing services for military vessels. This deperming station is the only location capable of servicing an aircraft carrier and the only deperming facility on the east coast of the United States. The proposed restricted area is in waters surrounding the existing facility immediately adjacent to the channel into Norfolk Harbor. The proposed restricted area is necessary to better protect underwater equipment, personnel, and vessels utilizing the facility by implementing a waterside security program.

**Procedural Requirements**

a. *Regulatory Planning and Review.* This proposed rule is not a ''significant regulatory action'' under Executive Order 12866 (58 FR 51735, October 4, 1993) and it was not submitted to the Office of Management and Budget for review.

b. *Regulatory Flexibility Act, as Amended by the Small Business Regulatory Enforcement Fairness Act of 1996, 5 U.S.C. 601 et seq.* This rule has been reviewed under the Regulatory Flexibility Act (Pub. L. 96–354). The Regulatory Flexibility Act generally requires an agency to prepare a regulatory flexibility analysis of any rule subject to notice-and-comment rulemaking requirements under the Administrative Procedure Act or any other statute unless the agency certifies that the rule will not have a significant economic impact on a substantial number of small entities (*i.e.,* small businesses and small governments).

The Corps certifies under 5 U.S.C. 605(b) that this proposed rule would not have a significant economic impact on a substantial number of small entities. The proposed restricted area is necessary for security of the deperming station. The restricted area is also necessary to protect underwater equipment, personnel, and vessels utilizing the facility by implementing a waterside security program. Small entities can utilize navigable waters outside of the restricted area. Small entities that need to transit the restricted area may do so as long as the vessel operator obtains permission from the Commanding Officer, U.S. Naval Station, Norfolk, Virginia and/or other persons or agencies that he/she may designate. This determination is based on the proposed rule governing the restricted area, including the ability for vessel operators to obtain permission from the Commanding Officer, U.S. Naval Station, Norfolk, Virginia and/or other persons or agencies as he/she may designate, to transit the restricted area. Unless information is obtained to the contrary during the comment period, the Corps expects that the economic impact of the proposed restricted area would have practically no impact on the public, any anticipated navigational hazard, or interference with existing waterway traffic. After considering the economic impacts of this restricted area regulation on small entities, I certify that this proposed rule would not have a significant impact on a substantial number of small entities.

*c. Review under the National Environmental Policy Act.* Due to the administrative nature of this action and because there is no intended change in the use of the area, the Corps expects that this regulation, if adopted, will not have a significant impact to the quality of the human environment and, therefore, preparation of an environmental impact statement will not be required. An environmental assessment will be prepared after the public notice period is closed and all comments have been received and considered.

*d. Unfunded Mandates Act.* This proposed rule does not impose an enforceable duty among the private sector and, therefore, it is not a federal private sector mandate and it is not subject to the requirements of either Section 202 or Section 205 of the Unfunded Mandates Act. The Corps has also found under Section 203 of the Act that small governments will not be significantly and uniquely affected by this rulemaking.

e. *Congressional Review Act.* The Congressional Review Act, 5 U.S.C. 801 *et seq.,* generally provides that before a rule may take effect, the agency promulgating the rule must submit a rule report, which includes a copy of the rule, to each House of the Congress and to the Comptroller General of the United States. The Corps will submit a report containing the final rule and other required information to the U.S. Senate, the U.S. House of Representatives, and the Comptroller General of the United States. A major rule cannot take effect until 60 days after it is published in the **Federal Register**. This proposed rule is not a ''major rule'' as defined by 5 U.S.C. 804(2).

**List of Subjects in 33 CFR Part 334**

Danger zones, Marine safety, Navigation (water), Restricted areas, Waterways.

For the reasons set out in the preamble, the Corps proposes to amend 33 CFR part 334 as follows:

## PART 334—DANGER ZONE AND RESTRICTED AREA REGULATIONS

■ 1. The authority citation for 33 CFR part 334 continues to read as follows:

**Authority:** 40 Stat. 266 (33 U.S.C. 1) and 40 Stat. 892 (33 U.S.C. 3).

■ 2. Add § 334.296 to read as follows:

**§ 334.296 Elizabeth River, Deperming Station, Norfolk, VA, Restricted Area.**

(a) *The area.* The waters within an area beginning at a point latitude 36°51′52″ N, longitude 76°20′04″ W; thence easterly to a point at latitude 36°51′52″ N, longitude 76°19′49″ W, thence northerly to latitude 36°52′06″ N, longitude 76°19′48″ W; thence northwesterly to latitude 36°52′12″ N, longitude 76°19′57″ W; thence northwesterly to a point at latitude 36°52′15″ N, longitude 76°19′59″ W; thence westerly to latitude 36°52′15″ N, longitude 76°20′04″ W, thence to the point of origin. The datum for these coordinates is WGS–84.

(b) *The regulations.* (1) No vessels other than vessels of the U.S. armed forces and other authorized vessels shall enter the restricted area. Other authorized vessels include vessels and personnel, including contactors and agents, acting on behalf of any federal or state agency or department performing specific work authorized as part of that agency or department's statutory missions or to enforce their respective laws. Authorized vessels may enter anywhere in the restricted area at any time in the furtherance of their authorized operations. This includes, but is not limited to, vessels that are engaged in the following operations: law enforcement; servicing aids to navigation; and/or surveying, maintenance, or improvement of the federal navigational channel.

(2) There shall be no introduction of external magnetic field sources within the area.

(3) No person or vessel shall at any time, under any circumstances, anchor or fish or tow a drag of any kind in the restricted area due to the risk of damage to mission essential underwater equipment, including an extensive cable system located therein.

(4) Orders and instructions issued by U.S. Navy patrol craft or other authorized representatives of the enforcing agency shall be carried out promptly by persons or vessels in or in the vicinity of the restricted area.

(c) *Enforcement.* The regulations in this section shall be enforced by the Commanding Officer, U.S. Naval Station, Norfolk, Virginia and such agencies as he/she may designate.

**Alvin B. Lee,**

*Director of Civil Works.*

[FR Doc. 2021–21980 Filed 10–7–21; 8:45 am]

**BILLING CODE 3720–58–P**

# Notices

Federal Register

Vol. 86, No. 193

Friday, October 8, 2021

This section of the FEDERAL REGISTER contains documents other than rules or proposed rules that are applicable to the public. Notices of hearings and investigations, committee meetings, agency decisions and rulings, delegations of authority, filing of petitions and applications and agency statements of organization and functions are examples of documents appearing in this section.

## AFRICAN DEVELOPMENT FOUNDATION

### Public Quarterly Meeting of the Board of Directors

**AGENCY:** United States African Development Foundation.

**ACTION:** Notice of meeting.

**SUMMARY:** The U.S. African Development Foundation (USADF) will hold its quarterly meeting of the Board of Directors to discuss the agency's programs and administration. This meeting will occur at the USADF office.

**DATES:** The meeting date is Tuesday, October 26, 2021, 10:30 a.m. to 12:00 noon.

**ADDRESSES:** The meeting will be held via teleconference. Please contact Nina-Belle Mbayu for further information.

**FOR FURTHER INFORMATION CONTACT:** Nina-Belle Mbayu, (202) 233–8808, *nbmbayu@usadf.gov.*

*Authority:* Public Law 96–533 (22 U.S.C. 290h).

Dated: October 5, 2021.

**Nina-Belle Mbayu,**

*Acting General Counsel.*

[FR Doc. 2021–22068 Filed 10–7–21; 8:45 am]

**BILLING CODE 6117–01–P**

## DEPARTMENT OF AGRICULTURE

### Economic Research Service

### Notice of Intent To Request Renewal of a Currently Approved Information Collection

**AGENCY:** Economic Research Service, USDA.

**ACTION:** Notice and request for comments.

**SUMMARY:** In accordance with the Paperwork Reduction Act of 1995, this notice announces the intention of the Economic Research Service (ERS) to request extension of a currently approved information collection, the Generic Clearance for Survey Research Studies.

**DATES:** Comments on this notice must be received by December 7, 2021 to be assured of consideration.

**ADDRESSES:** Address all comments concerning this notice to *pheny.weidman@usda.gov.*

**FOR FURTHER INFORMATION CONTACT:** Pheny Weidman at the address in the preamble. Tel. 202–694–5013.

**SUPPLEMENTARY INFORMATION:**

*Title:* Generic Clearance for Survey Research Studies.

*OMB Number:* 0536–0073.

*Expiration Date of Approval:* May 31, 2022.

*Type of Request:* Intent To Seek Approval To Extend an Information Collection for 3 Years.

*Abstract:* In accordance with the Paperwork Reduction Act of 1995 (Pub. L. 104–13) and OMB regulations at 5 CFR part 1320 (60 FR 44978, August 29, 1995), this notice announces the ERS' intention to request renewal of approval from the Office of Management and Budget (OMB) for a generic clearance that will allow ERS to rigorously develop, test, and evaluate its survey methodologies, instruments, and administration. The mission of ERS is to provide economic and other social science information and analysis for public and private decisions on agriculture, food, natural resources, and rural America. This request is part of an on-going initiative to improve ERS data product quality, as recommended by both its own guidelines and those of OMB.

The purpose of this generic clearance is to allow ERS to evaluate, adopt, and use state-of-the-art and multi-disciplinary research to improve and enhance the quality of its current data collections. This clearance will also be used to aid in the development of new surveys. It will help to ensure that requested data can be provided in the desired format, reporting burden (time and financial resources) is minimized, collection instruments are clearly understood, and the impact of collection requirements on respondents can be properly assessed.

ERS envisions using a variety of survey improvement techniques, as appropriate to the individual project under investigation. These include focus groups, market analysis, cognitive and usability laboratory and field techniques, exploratory interviews, behavior coding, and respondent debriefing.

Following standard OMB requirements, ERS will inform OMB individually in writing of the purpose, scope, time frame, and number of burden hours used for each survey improvement or development project it undertakes under this generic clearance. ERS will also provide OMB with a copy of the data collection instrument (if applicable), and all other materials describing the project.

*Authority:* These data will be collected under the authority of 7 U.S.C. 2204(a).

ERS intends to protect respondent information under the Privacy Act of 1974, Section 1770 of the Food Security Act of 1985, and 7 U.S.C. 2276. ERS has decided not to invoke the Confidential Information Protection and Statistical Efficiency Act of 2002 (CIPSEA). The complexity and cost necessary to invoke CIPSEA is not justified given the nature of the collection; the collections would generally be conducted by ERS' contractors and designed to be hosted in non-government owned computer systems, where CIPSEA compliance could not be assured.

Specific details regarding information handling will be specified in individual submissions under this generic clearance.

*Estimate of Burden:* Public reporting burden for these collections of information is estimated to average from .5 to 1.5 hours per respondent, depending upon the information collection and the technique used to test for that particular collection.

*Respondents:* Individuals or households, farms, and businesses or other for-profits.

*Estimated Total Number of Respondents:* 3,630.

*Estimated Total Annual Burden on Respondents:* 1,820 hours. Public reporting burden for these collections of information is estimated to average from .5 to 1.5 hours per respondent, dependent upon the survey and the technique used to test for that particular survey.

Copies of this information collection can be obtained from Pheny Weidman at the address in the preamble.

*Comments:* Comments are invited on: (a) Whether the proposed collection of information is necessary for the proper performance of the functions of the Agency, including whether the information will have practical utility; (b) the accuracy of the Agency's estimate of the burden of the proposed collection of information, including the validity of the methodology and assumptions used; (c) ways to enhance the quality, utility, and clarity of the information to be collected; (d) ways to minimize the burden of the collection of information on those who are to respond, including through the use of appropriate automated, electronic, mechanical, or other technological collection techniques or other forms of information technology. Comments should be sent to the address in the preamble. All responses to this notice will be summarized and included in the request for OMB approval. All comments will also become a matter of public record.

**Spiro Stefanou,**

*Administrator, Economic Research Service, United States Department of Agriculture.*

[FR Doc. 2021–22002 Filed 10–7–21; 8:45 am]

**BILLING CODE 3410–18–P**

## DEPARTMENT OF AGRICULTURE

### Food and Nutrition Service

### Agency Information Collection Activities: Proposed Collection; Comment Request—Food Program and Reporting System (FPRS)

**AGENCY:** Food and Nutrition Service (FNS), USDA.

**ACTION:** Notice.

**SUMMARY:** In accordance with the Paperwork Reduction Act of 1995, this notice invites the general public and other public agencies to comment on this proposed information collection. This is a revision of a currently approved collection for the Food Programs Reporting System (FPRS). The purpose of FPRS is to enable data gathering for the reporting of data related to Food and Nutrition Service (FNS) programs, including the Supplemental Nutrition Assistance Program (SNAP). FPRS is the primary collection point for FNS program performance statistics and financial data from State agencies, Indian Tribal Organizations and U.S. Territories running and operating the nutrition assistance programs. FNS is announcing a revision to the reporting requirements in the SNAP Employment and Training program, specifically FNS–583, SNAP Employment and Training Program Activity Report, due to changes in rulemaking from the final rule titled, ''Employment and Training Opportunities in the Supplemental Nutrition Assistance Program,'' RIN 0584–AE68 published January 5, 2021. This notice also announces the proposed revision of the FNS–366B, Program Activity Statement, to revise the currently collected data on initial and recertification applications. FNS is not requesting any other updates in this request.

**DATES:** Written comments must be received on or before December 7, 2021.

**ADDRESSES:** Comments may be submitted via fax to Moira Johnston at 703–305–2515 or via email to *moira.johnston@usda.gov.* Comments will also be accepted through the Federal eRulemaking Portal. Go to *http://www.regulations.gov,* and follow the online instructions for submitting comments electronically.

All responses to this notice will be summarized and included in the request for Office of Management and Budget approval. All comments will be a matter of public record.

**FOR FURTHER INFORMATION CONTACT:** Requests for additional information or copies of this information collection should be directed to Moira Johnston at 703–305–2515.

**SUPPLEMENTARY INFORMATION:** Comments are invited on: (a) Whether the proposed collection of information is necessary for the proper performance of the functions of the agency, including whether the information shall have practical utility; (b) the accuracy of the agency's estimate of the burden of the proposed collection of information, including the validity of the methodology and assumptions that were used; (c) ways to enhance the quality, utility, and clarity of the information to be collected; and (d) ways to minimize the burden of the collection of information on those who are to respond, including use of appropriate automated, electronic, mechanical, or other technological collection techniques or other forms of information technology.

*Title:* Food Programs Reporting System.

*Form Number:* FNS–583, SNAP Employment and Training Program Activity Report and the FNS–366B, Program Activity Statement.

*OMB Number:* 0584–0594.

*Expiration Date:* 07/31/2023.

*Type of Request:* Revision of a currently approved collection.

*Abstract:*

**FNS–583 Revision**

The SNAP Employment and Training (E&T) program, established by the Food Security Act of 1985, helps able-bodied SNAP recipients find work or gain the skills, training, and experience that leads to employment. In accordance with 7 CFR 273.7(c)(9), State agencies are required to submit quarterly E&T Program Activity Reports containing monthly figures for participation in the program no later than 45 days after the end of each Federal fiscal quarter FNS uses Form FNS–583 to provide the format for this data. State agencies report this data using the online Food Program Reporting System (FPRS, OMB Control Number: 0584–0594; Expiration Date: 07/31/2023). The purpose of the E&T Program Activity Report (FNS–583) submitted and maintained in FPRS is to collect standard and consistent information on all States and Territories Work Registrants, E&T Participation, Able-Bodied Adults Without Dependents (ABAWD), Program Activities, Components funded through the Supplemental Nutrition Assistance Program Office of Employment and Training (OET). The data collected through the FNS–583 is used by FNS to help with management decisions, supports policy initiatives, and provides insight into where OET can best offer Technical Assistance to States, thus supporting planning within the agency. The current data elements collected as part of the FNS–583 in accordance with 7 CFR 273.7(c)(9), ask State agencies to report on:

- Newly work registered E&T participants;
- Number of ABAWD applicants and recipients participating in qualifying components;
- The number of all applicants and recipients participating in components;
- The number of ABAWDS subject to the 3-month time limit (in accordance with 273.24(b)) who are exempt under the State agency's discretionary exemptions under 273.24(g).

*Merging OMB-Approved Burden for the FNS–583 from OMB Control Number: 0584–0653 to OMB Control Number: 0584–0594:* FNS intends to update the FNS–583 form to reflect changes made as a direct result of the final rule titled, ''Employment and Training Opportunities in SNAP,'' RIN 0584–AE68, published January 5, 2021, (86 FR 358). The information collection burden associated with FNS final rule, 7 CFR parts 271 and 273, ''Employment and Training Opportunities in the Supplemental Nutrition Assistance Program,'' was approved under OMB Control Number: 0584–0653; Expiration

Date: March 31, 2024. The OMB term of clearance for this Information Collection Request (ICR) was that FNS would merge the burden hours for additional data elements on the FNS–583 (currently approved under OMB Control Number: 0584–0653) into the information collection for Food Programs Reporting System (FPRS).

In the final rule, the Department added the requirement for reporting four (4) additional data elements related to mandatory E&T participants to 7 CFR 273.7(c)(11). ''The Department is committed to ensuring that State agencies are providing mandatory E&T participants with opportunities to gain skills and appropriate services that help them be successful. Therefore, the Department proposed adding additional reporting elements to this fourth quarter report focused on mandatory E&T participants: The unduplicated number of SNAP applicants and participants required to participate in an E&T program during the fiscal year, and, of those, the number who actually began to participate in an E&T program.'' State agencies running FNS' mandatory programs are required to report these additional data elements on the Federal Fiscal Year fourth quarter report of the FNS–583 to FNS using the FPRS database.

The four (4) mandatory data elements include:

1. The number of SNAP applicants and participants required to participate in E&T by the State agency.
2. Of those required to participate, the number who begin participation in an E&T program.
3. Of those required to participate, the number who begin participation in an E&T component.
4. The number of mandatory E&T participants who were determined ineligible for failure to comply with E&T requirements.

This information collection request merges the 17 States who will submit 1 (one) response annually for an estimated total of 17 annual responses and 68 estimated annual burden hours associated with CFR 273.7(c)(11) reporting additional FNS 583 data elements currently approved under OMB Control Number: 0584–0653 information collection associated with a final rulemaking into the FPRS OMB Control Number: 0584–0594, which will now account for these additional elements to the revised FNS–583.

**Revisions to the FNS–583 Not Determined by Rulemaking**

The final rule requires that individuals participating in SNAP Employment and Training (E&T) must be provided with case management services, in addition to one or more E&T component, in accordance to 237.7(e)(1). As such, in addition to the four (4) mandatory data elements required due to rulemaking, FNS has an additional optional reporting case management reporting not determined by rulemaking.

The one (1) optional data elements include:

1. The number of E&T participants who received case management services.

While offering case management is required, the Department does not currently require States to report on the number of individuals that receive case management services on the FNS–583. However, many State agencies track the provision of case management services and may wish to report on those activities in their 4th quarter FNS–583 report. The Department requests to include in this revision of the FNS–583 a section that would to allow States the option to report the number of individuals that receive case management services.

The reporting of case management data is voluntary, but is intended to assist FNS in monitoring State's implementation of the mandatory case management offering and increase State's accountability.

This information collection revision for OMB Control Number: 0584–0594 includes an additional 1.25 hours for the addition of the voluntary case management data field to the FNS–583.

*Affected Public:* State, Local and Tribal Governments. Respondent group includes State agencies administering the SNAP E&T program in 50 States, the District of Columbia, Guam, and the U.S. Virgin Islands.

*Estimated Number of Respondents:* The total estimated number of respondents annually for the reporting burden of the FNS–583 is 53 State agencies.

FNS estimates that currently, about 17 respondents of the 53 State agencies would be subject to the new data elements required for mandatory States. In addition, about 15 respondents of the 53 State agencies may choose to report on the new optional elements of case management services, although this is not a requirement by rulemaking. This is a total of 32 States agencies who will respond to the new changes associated with the revision of form FNS–583.

*Estimated Number of Responses per Respondent:* The 53 States agencies are required to submit data on the FNS–583 for 4 reports per year (quarterly). As both the new reporting elements for mandatory States and the optional case management reporting only affects the 4th quarter of the 583, the estimated number of responses per respondent is 1 for both the additional data entries and the optional case management reporting. On average, for all 53 State agencies, the estimated number of responses per respondent is 4.6 responses annually.

*Total Annual Responses:* The total annual responses is 244. This number includes the 212 burden hours currently approved for the quarterly FNS–583 report as well as the estimated newly estimated 17 total annual responses from mandatory States on the new data elements due to the final rulemaking plus the newly estimated 15 responses on optional case management reporting not associated with any rulemaking and at the discretion of the FNS; therefore, 32 of the 244 total annual responses are new.

*Estimated Time per Response:* There will be an additional 4 hours for the 17 State agency respondents of mandatory States reporting additional data elements. The optional reporting of case management will take about 5 minutes (0.0835 hours) per response estimated for 15 State agency respondents.

*Estimated Total Annual Burden on Respondents:* The burden to be added to OMB Control Number: 0584–0594 is 69.25 hours. This total includes 68 hours from the new 4 data elements from mandatory States (currently approved under OMB Control Number 0584–0653, to be merged into OMB Control Number: 0584–0594) plus the 1.25 hours from reporting the optional case management (newly requested burden under OMB Control Number: 0584–0594). The currently approved reporting burden hours is 20,776 for the FNS 583 under OMB Control Number: 0584–0594 (expiration 7/31/2023). The updated total FNS–583 burden is 20,845.25 hours. The new total FPRS burden includes the previously approved burden of 104,610.5 total hours plus the additional 69.25 hours from the merge from OMB Control Number: 0584–0653 and the newly requested data element, resulting in 104,679 as the Overall Grand Total Burden Estimates for FPRS.

See the table below for estimated total annual burden for each type of respondent.

REPORTING BURDEN ESTIMATES FOR THE FNS–583

| | Respondent | Form | CFR citation | Estimated number respondent | Responses annually per respondent | Total annual responses (col. b × c) | Estimated avg. number of hours per response | Estimated total hours (col. d × e) |
|---|---|---|---|---|---|---|---|---|
| **Reporting Burden** | | | | | | | | |
| *Currently Approved Reporting Burden for the FNS–583 in OMB Control Number 0584–0594 (expiration 7/31/2023).* | *State Agency Administrative Staff.* | FNS 583 | ..... | *53* | *4* | *212* | *98* | *20,776.00* |
| ** Currently Approved Additional Data Request—Mandatory Reporting (Burden to be merged from OMB Control Number 0584–0653 to OMB Control Number 0584–0594). | State Agency Administrative Staff Running Mandatory Programs. | | 7 CFR 273.7(c)(11) | 17 | 1 | 17 | 4 | 68.00 |
| NEW Optional Reporting of Case Management (NEW burden to be added to OMB Control Number 0584–0594). | State Agency Administrative Staff. | | TBD ..... | 15 | 1 | 15 | 0.0835 | 1.25 |
| Total Burden to be added to OMB Control Number 0584–0594. | | ..... | ..... | 32 | 1 | 32 | 4.0835 | 69.25 |
| Grand Total Burden Estimates for FNS 583. | | ..... | ..... | 53 | 4.603773585 | 244 | 85.4313627 | 20,845.25 |

* **Note:** There are only 53 State agencies, FNS is not counting duplicative States who conduct additional activities; we are only counting the activities/responses and the burden times associated with these activities.

** **Note:** Only 17 of the 53 States agencies are expected to respond to the activities in form FNS 583 requirements in 7 CFR 273.7 (c) (11) burden activities approved OMB Control Number: 0584–0653 associated with the final rulemaking for E&T SNAP. All other burden approved in OMB Control Number: 0584–0653 collection will remain. The burden for FNS 583 will be merged into the FPRS OMB Control Number: 0584–0594 Expiration Date: 07/31/2023.

TOTAL REVISED REPORTING BURDEN ESTIMATES FOR OMB CONTROL NUMBER 0584–0594

| Respondent | Instrument/form | Estimated number respondents | Responses annually per respondent | Total annual responses (col. b × c) | Estimated avg. number of hours per response | Estimated total hours (col. d × e) |
|---|---|---|---|---|---|---|
| **Reporting Burden** | | | | | | |
| Currently Approved Burden in in OMB Control Number 0584–0594. | | 12,708 | 3.71081208687441 | 47,157 | 2.16392052081 | 102,044 |
| Total Burden to be added to OMB Control Number 0584–0594. | | 32 | 1 | 32 | 2.1640625 | 69.25 |
| Overall Grand Total for OMB Control Number 0584–0594 | | 12,708 | 3.69 | 47,189 | 2.163920617092967 | 102,113.25 |

TOTAL REVISED REPORTING BURDEN ESTIMATES FOR OMB CONTROL NUMBER 0584–0653

| | Estimated total hours | Total annual responses |
|---|---|---|
| Currently Approved Reporting Burden in OMB Control Number: 0584–0653 (expiration 7/31/2023) ..... | 2,071,908 | 15,500,709 |
| Total Burden to be removed from OMB Control Number 0594–0653 and merged into OMB Control Number: 0584–0594 ..... | −68 | −17 |
| Updated Grand Total Burden Estimates remaining in OMB Control Number: 0584–0653 ..... | 2,071,840 | 15,500,692 |

**FNS–366B Revision**

The FNS–366B, Program Activity Statement, is FNS' primary means of collecting data on the integrity and certification activities of State SNAP agencies. The Certification section of the FNS–366B is used to track the number of initial and recertification applications approved or denied by the State agency in the specified reporting quarter, as well as the number of applications that were approved beyond processing requirements. Collection of this data is required by Federal regulations authorized by the Food and Nutrition Act of 2008 (the Act). Under 7 CFR 272.2(c)(1)(ii) of SNAP regulations, State agencies are required to periodically

report to FNS using the Program Activity Statement (FNS–366B) on a quarterly basis.

After a recent policy review, FNS determined updates to the FNS–366B were needed to revise currently collected metrics related to SNAP recertification policy. Households that file a recertification application within 30 days of the end of their certification period are entitled to expedited service, if eligible. While the FNS–366B currently collects aggregate data on expedited applications on its current form, the form does not differentiate between expedited initial applications and expedited recertification applications. FNS is proposing to update the form to make this distinction. The form revision acknowledges the distinction in the policy. With the form changes, FNS will be able to collect disaggregated data on expedited applications, which will help inform the monitoring and tracking of timeliness compliance and identify opportunities for additional technical assistance.

Currently, State agencies are instructed to enter line 6 on the FNS–366B ''Expedited Service.'' FNS proposes to update the form by breaking down this data point into two separate data points, as follows:

- Line 6, ''Expedited Service'', will be replaced by Line 6a—''Expedited Service—Initial Applications.''
- FNS will also add Line 6b—''Expedited Service—Recertifications.''
- FNS has updated the FNS–366B instructions to reflect this proposed change.

The reporting burden of 3,180 burden hours, 53 respondents, and 212 total responses for the current version of the FNS–366B form is covered under OMB number 0584–0594, expiration date 07/31/2023. The recordkeeping burden of 1,124 hours for the FNS–366B form is currently covered under OMB number 0584–0083, expiration date 08/31/2023. We do not anticipate the changes to the FNS–366B will impact the current reporting or recordkeeping burden which will remain the same.

| Respondent | Form No. | CFR | Estimated number of respondents | Frequency of response per respondent | Total annual response | Estimated hrs. per response | Annual burden hrs. |
|---|---|---|---|---|---|---|---|
| State Agencies ..... | FNS–366B: Program and Budget Summary Statement: Program Activity Statement. | 7 CFR 272.2 ..... | 53.0 | 4.0 | 212.0 | 15.0 | 3,180.0 |

**Cynthia Long,**

*Administrator, Food and Nutrition Service.*

[FR Doc. 2021–22011 Filed 10–7–21; 8:45 am]

**BILLING CODE 3410–30–P**

## AMERICAN BATTLE MONUMENTS COMMISSION

### Information Collection: Generic Clearance for the Collection of Qualitative Feedback on Agency Service Delivery

**AGENCY:** American Battle Monuments Commission.

**ACTION:** Notice of information collection; request for comment.

**SUMMARY:** In accordance with the Paperwork Reduction Act of 1995, the ABMC is seeking comments from all interested individuals and organizations for a new information collection, Generic Clearance for the Collection of Qualitative Feedback on Agency Service Delivery.

**DATES:** Comments must be received in writing on or before December 7, 2021 to be assured of consideration. Comments received after that date will be considered to the extent practicable.

**ADDRESSES:** Commenters should submit comments via *regulations.gov.* Comments received in response to this notice will be made available to the public through relevant websites and upon request. For this reason, please do not include in your comments information of a confidential nature, such as sensitive personal information or proprietary information.

**FOR FURTHER INFORMATION CONTACT:** Karen Wurzburger, +33 (0)6 40 44 46 19, *wurzburgerk@abmc.gov.*

**SUPPLEMENTARY INFORMATION:**

*Title:* Generic Clearance for the Collection of Qualitative Feedback on Agency Service Delivery.

*Type of Request:* New collection.

*Abstract:* This information collection activity provides a means to garner qualitative customer and stakeholder feedback in an efficient, timely manner, in accordance with the Agency's commitment to improve service delivery. By qualitative feedback we mean information that provides useful insights on perceptions and opinions but are not statistical surveys that yield quantitative results that can be generalized to the population of study.

This feedback will provide insights into customer or stakeholder perceptions, experiences, and expectations, provide an early warning of issues with service, or focus attention on areas where communication, training or changes in operations might improve delivery of products or services. These collections will allow for ongoing, collaborative, and actionable communications between the Agency and its customers and stakeholders. It will also allow feedback to contribute directly to the improvement of program management. The solicitation of feedback will target areas such as: Timeliness, appropriateness, accuracy of information, courtesy, efficiency of service delivery, and resolution of issues with service delivery. Responses will be assessed to plan and inform efforts to improve or maintain the quality of service offered to the public.

If this information is not collected, vital feedback from customers and stakeholders on the Agency's services will be unavailable. The Agency will only submit a collection for approval under this generic clearance if it meets the following conditions:

- The collections are voluntary;
- The collections are low-burden for respondents (based on considerations of total burden hours, total number of respondents, or burden-hours per respondent) and are low-cost for both the respondents and the Federal Government;
- The collections are noncontroversial and do not raise issues of concern to other Federal agencies;
- Any collection is targeted to the solicitation of opinions from respondents who have experience with the program or may have experience with the program in the near future;
- Personally identifiable information (PII) is collected only to the extent necessary and is not retained;
- Information gathered is intended to be used only internally for general service improvement and program management purposes and is not intended for release outside of the agency (if released, the agency must indicate the qualitative nature of the information);
- Information gathered will not be used for the purpose of substantially informing influential policy decisions; and

• Information gathered will yield qualitative information. The collections will not be designed or expected to yield statistically reliable results or used as though the results are generalizable to the population of study. Feedback collected under this generic clearance provides useful information, but it does not yield data that can be generalized to the overall population.

This type of generic clearance for qualitative information will not be used for quantitative information collections that are designed to yield reliably actionable results, such as monitoring trends over time or documenting program performance. Such data uses require more rigorous designs that address: The target population to which generalizations will be made, the sampling frame, the sample design (including stratification and clustering), the precision requirements or power calculations that justify the proposed sample size, the expected response rate, methods for assessing potential nonresponse bias, the protocols for data collection, and any testing procedures that were or will be undertaken prior to fielding the study. Depending on the degree of influence the results are likely to have, such collections may still be eligible for submission for other generic mechanisms that are designed to yield quantitative results.

As a general matter, information collections will not result in any new system of records containing privacy information and will not ask questions of a sensitive nature, such as sexual behavior and attitudes, religious beliefs, and other matters that are commonly considered private.

*Type of Respondents:* Individuals and Households, Business and Organizations, State, Local or Tribal Government.

*Estimate of Burden per Response:* 10 minutes.

*Estimated Annual Number of Respondents:* 15,000.

*Estimated Annual Number of Responses per Respondent:* 1.

*Estimated Total Annual Burden on Respondents:* 2,500 total hours per year.

*Comment is Invited:* Comment is invited on: (1) Whether this collection of information is necessary for the stated purposes and the proper performance of the functions of the Agency, including whether the information will have practical or scientific utility; (2) the accuracy of the Agency's estimate of the burden of the collection of information, including the validity of the methodology and assumptions used; (3) ways to enhance the quality, utility, and clarity of the information to be collected; and (4) ways to minimize the burden of the collection of information on respondents, including the use of automated, electronic, mechanical, or other technological collection techniques or other forms of information technology.

All comments received in response to this notice, including names and addresses when provided, will be a matter of public record. Comments will be summarized and included in the submission to the Office of Management and Budget for approval.

Dated: October 5, 2021.

**Robert J. Dalessandro,**

*Deputy Secretary, ABMC.*

[FR Doc. 2021–22005 Filed 10–7–21; 8:45 am]

**BILLING CODE 6120–01–P**

## COMMISSION ON CIVIL RIGHTS

### Notice of Public Meeting of the South Carolina Advisory Committee to the U.S. Commission on Civil Rights

**AGENCY:** U.S. Commission on Civil Rights.

**ACTION:** Announcement of meeting.

**SUMMARY:** Notice is hereby given, pursuant to the provisions of the rules and regulations of the U.S. Commission on Civil Rights (Commission) and the Federal Advisory Committee Act, that the South Carolina Advisory Committee (Committee) to the U.S. Commission on Civil Rights will convene by video conferencing system, WebEx, at 12:00 p.m. ET on Thursday, November 4, 2021, Thursday, December 2, 2021, Thursday, January 6, 2022, and Thursday, February 3, 2022, for continued planning of its project on Civil Asset Forfeiture.

**DATES:** The meetings will take place at 12:00 p.m. ET on Thursday, November 4, 2021, Thursday, December 2, 2021, Thursday, January 6, 2022, and Thursday, February 3, 2022.

**ADDRESSES:**

*Public WebEx Conference Link (Audio/Visual): https://bit.ly/3AYYbK7*

*Telephone (Audio Only):* Dial 800–360–9505 USA Toll Free; Access code: 433 716 81

**FOR FURTHER INFORMATION CONTACT:** Barbara de La Viez, DFO, at *ero@usccr.gov* or (202) 376–8473.

**SUPPLEMENTARY INFORMATION:** Committee meetings are available to the public through the conference link above. Any interested member of the public may listen to the meeting. An open comment period will be provided to allow members of the public to make a statement as time allows. If joining via phone, callers can expect to incur regular charges for calls they initiate over wireless lines, according to their wireless plan, and the Commission will not refund any incurred charges. Individuals who are deaf, deafblind and hard of hearing may also follow the proceedings by first calling the Federal Relay Service at 1–800–877–8339 and providing the Service with the conference details found through registering at the web link above. To request additional accommodations, please email *ero@usccr.gov* at least ten (10) days prior to the meeting.

Members of the public are also entitled to submit written comments; the comments must be received in the regional office within 30 days following the meeting. Written comments may be emailed to Liliana Schiller at *lschiller@usccr.gov.* Persons who desire additional information may contact the Regional Programs Unit at (312) 353–8311.

Records generated from this meeting may be inspected and reproduced at the Regional Programs Unit Office, as they become available, both before and after the meeting. Records of the meeting will be available via *www.facadatabase.gov* under the Commission on Civil Rights, South Carolina Advisory Committee link. Persons interested in the work of this Committee are directed to the Commission's website, *http://www.usccr.gov,* or may contact the Regional Programs Unit at the above email or street address.

**Agenda**

*Nov. 4, Dec. 2, Jan. 6, Feb. 3; 12:00 p.m. ET*

I. Roll Call
II. Project Planning
III. Next Steps
IV. Open Comment
V. Adjourn

Dated: October 5, 2021.

**David Mussatt,**

*Supervisory Chief, Regional Programs Unit.*

[FR Doc. 2021–22029 Filed 10–7–21; 8:45 am]

**BILLING CODE P**

## COMMISSION ON CIVIL RIGHTS

### Notice of Public Meeting of the South Dakota Advisory Committee; Cancellation

**AGENCY:** Commission on Civil Rights.

**ACTION:** Notice; cancellation of meeting date.

**SUMMARY:** The Commission on Civil Rights published a notice in the **Federal Register** concerning a meeting of the South Dakota Advisory Committee. The

meeting scheduled for Monday, October 18, 2021, at 3:30 p.m. (CT) is cancelled. The notice is in the **Federal Register** of Monday, August 23, 2021, in FR Doc. 2021–17987, in the first, second and third columns of page 47053.

**FOR FURTHER INFORMATION CONTACT:** Mallory Trachtenberg, (202) 809–9618, *mtrachtenberg@usccr.gov.*

Dated: October 5, 2021.

**David Mussatt,**

*Supervisory Chief, Regional Programs Unit.*

[FR Doc. 2021–22057 Filed 10–7–21; 8:45 am]

**BILLING CODE P**

## COMMISSION ON CIVIL RIGHTS

### Notice of Public Meeting of the Connecticut Advisory Committee

**AGENCY:** Commission on Civil Rights.

**ACTION:** Announcement of meeting.

**SUMMARY:** Notice is hereby given, pursuant to the provisions of the rules and regulations of the U.S. Commission on Civil Rights (Commission), and the Federal Advisory Committee Act (FACA), that the Connecticut Advisory Committee to the U.S. Commission on Civil Rights will hold a meeting via web conference or phone call on Friday, October 29, 2021, at 12:00 p.m. The purpose of the meeting is to review project proposals for the Committee's next civil rights topic examination.

**DATES:** October 29, 2021, Friday, at 12:00 p.m. (ET):

- To join by web conference, use WebEx link: *https://bit.ly/3uHil95;* password, if needed: USCCR–CT
- To join by phone only, dial 1–800–360–9505; Access code: 2762 161 3118#

**FOR FURTHER INFORMATION CONTACT:** Barbara Delaviez at *ero@usccr.gov* or by phone at 202–539–8246.

**SUPPLEMENTARY INFORMATION:** This meeting is available to the public through the WebEx link above. If joining only via phone, callers can expect to incur charges for calls they initiate over wireless lines, and the Commission will not refund any incurred charges. Individuals who are deaf, deafblind and hard of hearing. may also follow the proceedings by first calling the Federal Relay Service at 1–800–877–8339 and providing the Service with the call-in number found through registering at the web link provided for this meeting.

Members of the public are entitled to make comments during the open period at the end of the meeting. Members of the public may also submit written comments; the comments must be received in the Regional Programs Unit within 30 days following the meeting. Written comments may be emailed to Barbara de La Viez at *ero@usccr.gov.* Persons who desire additional information may contact the Regional Programs Unit at (202) 539–8246. Records and documents discussed during the meeting will be available for public viewing as they become available at *www.facadatabase.gov.* Persons interested in the work of this advisory committee are advised to go to the Commission's website, *www.usccr.gov,* or to contact the Regional Programs Unit at the above phone number or email address.

**Agenda**

*Friday, October 29, 2021, at 12:00 p.m. (ET)*

I. Welcome and Roll Call
II. Project Planning
III. Public Comment
IV. Next Steps
V. Adjournment

Dated: October 5, 2021.

**David Mussatt,**

*Supervisory Chief, Regional Programs Unit.*

[FR Doc. 2021–22028 Filed 10–7–21; 8:45 am]

**BILLING CODE P**

## DEPARTMENT OF COMMERCE

### Census Bureau

### National Advisory Committee

**AGENCY:** Census Bureau, Department of Commerce.

**ACTION:** Notice of public virtual meeting.

**SUMMARY:** The Census Bureau is giving notice of a virtual meeting of the National Advisory Committee (NAC). The Committee will address policy, research, and technical issues relating to a full range of Census Bureau programs and activities, including decennial, economic, field operations, information technology, and statistics. Last minute changes to the schedule are possible, which could prevent giving advance public notice of schedule adjustments. Please visit the Census Advisory Committees website at *http://www.census.gov/cac* for the NAC meeting information, including the agenda, and how to join the meeting.

**DATES:** The virtual meeting will be held on:

- Thursday, November 4, 2021, from 11:00 a.m. to 5:00 p.m. EST, and
- Friday, November 5, 2021, from 11:00 a.m. to 5:00 p.m. EST

**ADDRESSES:** The meeting will be held via the WebEx platform at the following presentation links:

- November 4, 2021—*https://uscensus.webex.com/uscensus/onstage/g.php?MTID=ed54d23e9f7e49956629efb0dd8aa0021*
- November 5, 2021—*https://uscensus.webex.com/uscensus/onstage/g.php?MTID=ea397b2d8397ca1a0b7419e2b17ac1246*

For audio, please call the following number: 1–888–324–8107. When prompted, please use the following Password: NACmtg2021! and Passcode: 1777585#.

**FOR FURTHER INFORMATION CONTACT:** Shana Banks, Advisory Committee Branch Chief, Office of Program, Performance and Stakeholder Integration (PPSI), *shana.j.banks@census.gov,* Department of Commerce, Census Bureau, telephone 301–763–3815. For TTY callers, please use the Federal Relay Service at 1–800–877–8339.

**SUPPLEMENTARY INFORMATION:** The Committee provides scientific and technical expertise to address Census Bureau program needs and objectives. The members of the NAC are appointed by the Director of the Census Bureau. The Committee has been established in accordance with the Federal Advisory Committee Act (Title 5, United States Code, Appendix 2, Section 10).

All meetings are open to the public. A brief period will be set aside during the virtual meeting for public comments on November 5, 2021. Individuals with extensive questions or statements may submit them in writing to *shana.j.banks@census.gov,* (subject line ''2021 NAC Fall Virtual Meeting Public Comment'').

Ron S. Jarmin, Acting Director, Census Bureau, approved the publication of this Notice in the **Federal Register**.

Dated: October 4, 2021.

**Sheleen Dumas,**

*Department PRA Clearance Officer, Office of the Chief Information Officer, Commerce Department.*

[FR Doc. 2021–22061 Filed 10–7–21; 8:45 am]

**BILLING CODE 3510–07–P**

## DEPARTMENT OF COMMERCE

### Foreign-Trade Zones Board

**[S–121–2021]**

### Approval of Expansion of Subzone 18G, Tesla, Inc., Lathrop, California

On August 10, 2021, the Executive Secretary of the Foreign-Trade Zones (FTZ) Board docketed an application submitted by the City of San Jose, grantee of FTZ 18, requesting an

expansion of Subzone 18G subject to the existing activation limit of FTZ 18, on behalf of Tesla, Inc., in Lathrop, California.

The application was processed in accordance with the FTZ Act and Regulations, including notice in the **Federal Register** inviting public comment (86 FR 45703, August 16, 2021). The FTZ staff examiner reviewed the application and determined that it meets the criteria for approval. Pursuant to the authority delegated to the FTZ Board Executive Secretary (15 CFR Sec. 400.36(f)), the application to expand Subzone 18G was approved on October 5, 2021, subject to the FTZ Act and the Board's regulations, including Section 400.13, and further subject to FTZ 18's 2,000-acre activation limit.

Dated: October 5, 2021.

**Andrew McGilvray,**

*Executive Secretary.*

[FR Doc. 2021–22036 Filed 10–7–21; 8:45 am]

BILLING CODE 3510–DS–P

## DEPARTMENT OF COMMERCE

### Foreign-Trade Zones Board

**[Order No. 2119]**

### Reorganization and Expansion of Foreign-Trade Zone 249 Under Alternative Site Framework, Pensacola, Florida

Pursuant to its authority under the Foreign-Trade Zones Act of June 18, 1934, as amended (19 U.S.C. 81a–l81u), the Foreign-Trade Zones Board (the Board) adopts the following Order:

*Whereas,* the Foreign-Trade Zones (FTZ) Act provides for ''. . . the establishment . . . of foreign-trade zones in ports of entry of the United States, to expedite and encourage foreign commerce, and for other purposes,'' and authorizes the Board to grant to qualified corporations the privilege of establishing foreign-trade zones in or adjacent to U.S. Customs and Border Protection ports of entry;

*Whereas,* the Board adopted the alternative site framework (ASF) (15 CFR Sec. 400.2(c)) as an option for the establishment or reorganization of zones;

*Whereas,* the Pensacola-Escambia County Promotion & Development Commission, grantee of Foreign-Trade Zone 249, submitted an application to the Board (FTZ Docket B–42–2021, docketed May 26, 2021) for authority to reorganize and expand under the ASF with a service area of Escambia, Okaloosa and Santa Rosa Counties, Florida, in and adjacent to the Pensacola U.S. Customs and Border Protection port of entry, and FTZ 249's existing Sites 1, 2, 3 and 5 would be categorized as magnet sites, and the grantee proposes three usage-driven sites (Sites 6, 7 and 8), and that Site 4 be removed from the zone;

*Whereas,* notice inviting public comment was given in the **Federal Register** (86 FR 29560, June 2, 2021) and the application has been processed pursuant to the FTZ Act and the Board's regulations; and,

*Whereas,* the Board adopts the findings and recommendations of the examiners' report, and finds that the requirements of the FTZ Act and the Board's regulations are satisfied;

*Now, therefore,* the Board hereby orders:

The application to reorganize and expand FTZ 249 under the ASF is approved, subject to the FTZ Act and the Board's regulations, including Section 400.13, to the Board's standard 2,000-acre activation limit for the zone, to an ASF sunset provision for magnet sites that would terminate authority for Sites 2, 3 and 5 if not activated within five years from the month of approval, and to an ASF sunset provision for usage-driven sites that would terminate authority for Sites 6, 7 and 8 if no foreign-status merchandise is admitted for a *bona fide* customs purpose within three years from the month of approval.

Dated: October 4, 2021.

**Christian B. Marsh,**

*Acting Assistant Secretary for Enforcement and Compliance, Alternate Chairman, Foreign-Trade Zones Board.*

[FR Doc. 2021–22035 Filed 10–7–21; 8:45 am]

BILLING CODE 3510–DS–P

## DEPARTMENT OF COMMERCE

### Bureau of Industry and Security

### Sensors and Instrumentation Technical Advisory Committee; Notice of Partially Closed Meeting

The Sensors and Instrumentation Technical Advisory Committee (SITAC) will meet on October 26, 2021, at 1:00 p.m., Eastern Daylight Time, via teleconference. The Committee advises the Office of the Assistant Secretary for Export Administration on technical questions that affect the level of export controls applicable to sensors and instrumentation equipment and technology.

**Agenda**

*Public Session*

1. Welcome and Introductions.
2. Remarks from the Bureau of Industry and Security Management.
3. Industry Presentations.
4. New Business.

*Closed Session*

5. Discussion of matters determined to be exempt from the provisions relating to public meetings found in 5 U.S.C. app. 2 §§ 10(a)(1) and 10(a)(3).

The open session will be accessible via teleconference on a first come, first serve basis. To join the conference, submit inquiries to Ms. Yvette Springer at *Yvette.Springer@bis.doc.gov* no later than October 19, 2021.

To the extent that time permits, members of the public may present oral statements to the Committee. The public may submit written statements at any time before or after the meeting. However, to facilitate distribution of public presentation materials to the Committee members, the Committee suggests that the materials be forwarded before the meeting to Ms. Springer.

The Assistant Secretary for Administration, with the concurrence of the delegate of the General Counsel, formally determined on September 29, 2021, pursuant to Section 10(d) of the Federal Advisory Committee Act, as amended (5 U.S.C. app. 2 § 10(d)), that the portion of the meeting dealing with pre-decisional changes to the Commerce Control List and the U.S. export control policies shall be exempt from the provisions relating to public meetings found in 5 U.S.C. app. 2 § § 10(a)(1) and 10(a)(3). The remaining portions of the meeting will be open to the public.

For more information contact Yvette Springer on (202) 482–2813.

**Yvette Springer,**

*Committee Liaison Officer.*

[FR Doc. 2021–22053 Filed 10–7–21; 8:45 am]

BILLING CODE 3510–JT–P

## DEPARTMENT OF COMMERCE

### Bureau of Industry and Security

### Emerging Technology Technical Advisory Committee; Notice of Partially Closed Meeting

The Emerging Technology Technical Advisory Committee (ETTAC) will meet on October 28, 2021, at 11:00 a.m., Eastern Daylight Time. The meeting will be available via teleconference. The Committee advises the Office of the Assistant Secretary for Export Administration on the identification of emerging and foundational technologies with potential dual-use applications as early as possible in their developmental

stages both within the United States and abroad.

**Agenda**

*Open Session*

1. Welcome and Introductions.
2. Introduction by the Bureau of Industry and Security Leadership.
3. Chair/Vice Chair Welcoming Words.
4. Presentation: ''Work at the Human-Technology Frontiers''—Dr. Henry Renski, Ph.D., University of Massachusetts, Amherst, MA.
5. Public Comments/Announcements.
6. Conclusion of Open Session.

*Closed Session*

7. Discussion of matters determined to be exempt from the provisions relating to public meetings found in 5 U.S.C. app. 2 §§ 10(a)(1) and 10(a)(3).

The open session will be accessible via teleconference to 20 participants on a first come, first serve basis. To join the conference, submit inquiries to Ms. Yvette Springer at *Yvette.Springer@bis.doc.gov* no later than October 21, 2021.

To the extent time permits, members of the public may present oral statements to the Committee. The public may submit written statements at any time before or after the meeting. However, to facilitate distribution of public presentation materials to Committee members, the Committee suggests that presenters forward the public presentation materials prior to the meeting to Ms. Springer via email.

The Assistant Secretary for Administration, with the concurrence of the delegate of the General Counsel, formally determined on February 9, 2021, pursuant to Section 10(d) of the Federal Advisory Committee Act, as amended (5 U.S.C. app. 2 § 10(d)), that the portion of the meeting dealing with pre-decisional changes to the Commerce Control List and the U.S. export control policies shall be exempt from the provisions relating to public meetings found in 5 U.S.C. app. 2 § § 10(a)(1) and 10(a)(3). The remaining portions of the meeting will be open to the public.

For more information, call Yvette Springer at (202) 482–2813.

**Yvette Springer,**

*Committee Liaison Officer.*

[FR Doc. 2021–22054 Filed 10–7–21; 8:45 am]

BILLING CODE 3510–JT–P

## DEPARTMENT OF COMMERCE

### International Trade Administration

**[C–489–830]**

### Steel Concrete Reinforcing Bar From the Republic of Turkey: Rescission of Countervailing Duty Administrative Review; 2020

**AGENCY:** Enforcement and Compliance, International Trade Administration, Department of Commerce.

**SUMMARY:** The Department of Commerce (Commerce) is rescinding the administrative review of the countervailing duty (CVD) order on steel concrete reinforcing bar (rebar) from the Republic of Turkey (Turkey), covering the period January 1, 2020, through December 31, 2020.

**DATES:** Applicable October 8, 2021.

**FOR FURTHER INFORMATION CONTACT:** Peter Shaw, AD/CVD Operations, Office VII, Enforcement and Compliance, International Trade Administration, U.S. Department of Commerce, 1401 Constitution Avenue NW, Washington, DC 20230; telephone: (202) 482–0697.

**SUPPLEMENTARY INFORMATION:**

**Background**

On July 1, 2021, Commerce published in the **Federal Register** a notice of opportunity to request an administrative review of the CVD order on rebar from Turkey.[1] On July 30, 2021, the Rebar Trade Coalition (the petitioner) timely requested that Commerce conduct an administrative review of Habas Sinai ve Tibbi Gazlar Istihsal Endustrisi A.S (Habas).[2] We received no other requests for review. On August 29, 2021, Habas notified Commerce that it had no sales, shipments, or entries of subject merchandise during the period of review (POR).[3] On September 7, 2021, Commerce published in the **Federal Register** a notice of initiation of an administrative review with respect to Habas, in accordance with section 751(a) of the Tariff Act of 1930, as amended (the Act).[4] On September 15, 2021, Commerce issued a no-shipment inquiry to U.S. Customs and Border Protection (CBP) to corroborate Habas' claim.[5] On September 23, 2021, Commerce notified all interested parties that CBP found no evidence of shipments of subject merchandise produced and exported by Habas during the POR.[6] That same day, Commerce provided all parties an opportunity to comment on CBP's findings.[7] No parties submitted comments.

**Rescission of Review**

Pursuant to 19 CFR 351.213(d)(3), it is Commerce's practice to rescind an administrative review of a CVD order where it concludes that there were no reviewable entries of subject merchandise during the POR.[8] Normally, upon completion of an administrative review, the suspended entries are liquidated at the CVD assessment rate for the review period.[9] Therefore, for an administrative review to be conducted, there must be a reviewable, suspended entry that Commerce can instruct CBP to liquidate at the calculated CVD assessment rate for the review period.[10] As noted above, CBP confirmed that there were no entries of subject merchandise during the POR with respect to Habas, the only company subject to this review. Accordingly, in the absence of reviewable, suspended entries of subject merchandise during the POR, we are rescinding this administrative review, in its entirety, in accordance with 19 CFR 351.213(d)(3).

**Assessment**

Commerce will instruct CBP to assess countervailing duties on all appropriate entries. Because Commerce is rescinding this review in its entirety, the entries to which this administrative review pertained shall be assessed at rates equal to the cash deposit of estimated countervailing duties required at the time of entry, or withdrawal from warehouse, for consumption, in

[1] *See Antidumping or Countervailing Duty Order, Finding, or Suspended Investigation; Opportunity To Request Administrative Review,* 86 FR 35065 (July 1, 2021).

[2] *See* Petitioner's Letter, ''Steel Concrete Reinforcing Bar from the Republic of Turkey: Request for Administrative Review,'' dated July 30, 2021.

[3] *See* Habas' Letter, ''Steel Concrete Reinforcing Bar from Turkey; Habas No Shipment Letter,'' dated August 29, 2021.

[4] *See Initiation of Antidumping and Countervailing Duty Administrative Reviews,* 86 FR 50046, (September 7, 2021) (*Initiation Notice*).

[5] *See* Customs Instructions Message 1258402, dated September 15, 2021.

[6] *See* Memorandum, ''Steel concrete reinforcing bar from the Republic of Turkey (C–489–830): No shipment inquiry with respect to the companies below during the period 01/01/2020 through 12/31/2020,'' dated September 23, 2021.

[7] *See* Memorandum, ''Steel Concrete Reinforcing Bar from the Republic of Turkey: Deadline for Comments on Results of No Shipment Inquiry,'' dated September 23, 2021.

[8] *See, e.g., Certain Hardwood Plywood Products from the People's Republic of China: Preliminary Results of Countervailing Duty Administrative Review and Rescission of Review, in Part; 2017–2018,* 84 FR 54844, 54845 and n.8 (October 11, 2019) (citing *Lightweight Thermal Paper from the People's Republic of China: Notice of Rescission of Countervailing Duty Administrative Review; 2015,* 82 FR 14349 (March 20, 2017)).

[9] *See* 19 CFR 351.212(b)(2).

[10] *See* 19 CFR 351.213(d)(3).

accordance with 19 CFR 351.212(c)(1)(i). Commerce intends to issue assessment instructions to CBP no earlier than 35 days after the date of publication of this rescission notice in the **Federal Register**.

### Notification Regarding Administrative Protective Order

This notice serves as a final reminder to parties subject to administrative protective order (APO) of their responsibility concerning the return or destruction of proprietary information disclosed under APO in accordance with 19 CFR 351.305, which continues to govern business proprietary information in this segment of the proceeding. Timely written notification of the return or destruction of the APO materials, or conversion to judicial protective order is hereby requested. Failure to comply with regulations and terms of an APO is a violation, which is subject to sanction.

### Notification to Interested Parties

This notice is issued and published in accordance with sections 751(a)(1) and 777(i)(l) of the Act, and 19 CFR 351.213(d)(4).

Dated: October 5, 2021.

**James Maeder,**

*Deputy Assistant Secretary for Antidumping and Countervailing Duty Operations.*

[FR Doc. 2021–22033 Filed 10–7–21; 8:45 am]

**BILLING CODE 3510–DS–P**

---

## DEPARTMENT OF COMMERCE

## International Trade Administration

**[A–570–904]**

## Certain Activated Carbon From the People's Republic of China: Notice of Initiation and Preliminary Results of Antidumping Duty Changed Circumstances Review

**AGENCY:** Enforcement and Compliance, International Trade Administration, Department of Commerce.

**SUMMARY:** The Department of Commerce (Commerce) is initiating a changed circumstances review (CCR) of the antidumping duty (AD) order on certain activated carbon (activated carbon) from the People's Republic of China (China). Further, Commerce preliminarily determines that Ningxia Huahui Environmental Technology Co., Ltd. (Huahui Environmental) is the successor-in-interest to Ningxia Huahui Activated Carbon Co., Ltd. (Ningxia Huahui), and should be assigned the same AD cash deposit rate for purposes of determining AD liability on activated carbon from China. Interested parties are invited to comment on these preliminary results.

**DATES:** Applicable October 8, 2021.

**FOR FURTHER INFORMATION CONTACT:** Jinny Ahn, AD/CVD Operations, Office VIII, Enforcement and Compliance, International Trade Administration, Department of Commerce, 1401 Constitution Avenue NW, Washington, DC 20230; telephone: (202) 482–0339.

**SUPPLEMENTARY INFORMATION:**

### Background

On April 27, 2007, Commerce published the AD order on activated carbon from China, which included Ningxia Huahui.[1] Pursuant to the *Order,* Commerce assigned Ningxia Huahui an AD cash deposit rate, of 67.14 percent, based on the non-selected respondent rate.[2] In the most recently completed administrative review covering the period April 1, 2018, through March 31, 2019, we assigned Ningxia Huahui a separate rate, as a non-individually examined exporter under review.[3]

On August 20, 2021, Huahui Environmental requested that Commerce conduct a CCR of the *Order* to confirm that ''Ningxia Huahui Environmental Technology Co., Ltd.'' is the successor-in-interest to Ningxia Huahui and that it be subject to Ningxia Huahui's AD margin for activated carbon from China.[4] No interested parties filed comments opposing the CCR request.

### Scope of the Order

The merchandise covered by the scope of this order is activated carbon. For a complete description of the scope of the *Order, see* the Preliminary Decision Memorandum.[5]

### Methodology

We are conducting this CCR in accordance with section 751(b)(1) of the Tariff Act of 1930, as amended (the Act), and 19 CFR 351.216. For a full description of the methodology underlying our preliminary conclusions, *see* the Preliminary Decision Memorandum. A list of the topics discussed in the Preliminary Decision Memorandum is included as an appendix to this notice. The Preliminary Decision Memorandum is a public document and is made available to the public via Enforcement and Compliance's Antidumping and Countervailing Duty Centralized Electronic Service System (ACCESS). ACCESS is available to registered users at *https://access.trade.gov*. In addition, a complete version of the Preliminary Decision Memorandum is available at *http://enforcement.trade.gov/frn/*.

### Initiation and Preliminary Results of CCR

Pursuant to section 751(b)(1) of the Act, and 19 CFR 351.216, Commerce will conduct a CCR upon receipt of information concerning, or a request from an interested party for a review of, an AD order which shows changed circumstances sufficient to warrant a review of the order. The information submitted by Huahui Environmental supporting its claim that Huahui Environmental should be treated as the successor-in-interest to Ningxia Huahui, demonstrates changed circumstances sufficient to warrant such a review.[6] Therefore, in accordance with 751(b)(1)(A) of the Act and 19 CFR 351.216(d), we are initiating a CCR based on the information contained in the CCR request.

Pursuant to 19 CFR 351.221(c)(3)(ii), Commerce can combine the notice of initiation of a CCR and the notice of preliminary results of a CCR into a single notice if Commerce concludes that expedited action is warranted. In this instance, because the record contains the information necessary to make a preliminary finding, we find that expedited action is warranted and have combined the notice of initiation and the notice of preliminary results.[7] In this CCR, pursuant to section 751(b) of the Act, Commerce conducted a successor-in-interest analysis. In making a successor-in-interest determination, Commerce examines several factors, including, but not limited to, changes in the following: (1) Management; (2) production facilities; (3) supplier

---

[1] *See Notice of Antidumping Duty Order: Certain Activated Carbon from the People's Republic of China,* 72 FR 20988 (April 27, 2007) (*Order*).

[2] *See Order,* 72 FR at 20990.

[3] *See Certain Activated Carbon from the People's Republic of China: Final Results of Antidumping Duty Administrative Review, Final Determination of No Shipments, and Final Rescission of Administrative Review, in Part; 2018–2019,* 86 FR 10539 (February 22, 2021).

[4] *See* Ningxia Huahui's Letter, ''Activated Carbon from the People's Republic of China—Ningxia Huahui Changed Circumstances Review,'' dated August 20, 2021 (CCR Request).

[5] *See* Memorandum, ''Decision Memorandum for the Initiation and Preliminary Results of the Changed Circumstances Review of the Antidumping Duty Order on Certain Activated Carbon from the People's Republic of China,'' dated concurrently with, and hereby adopted by, this notice (Preliminary Decision Memorandum).

[6] *See* 19 CFR 351.216(d).

[7] *See* 19 CFR 351.221(c)(3)(ii); *see also, e.g., Notice of Initiation and Preliminary Results of Changed Circumstances Reviews: Certain Passenger Vehicle and Light Truck Tires from the People's Republic of China,* 85 FR 5193 (January 29, 2020), unchanged in *Certain Passenger Vehicle and Light Truck Tires from the People's Republic of China: Final Results of Changed Circumstances Reviews,* 85 FR 14638 (March 13, 2020).

relationships; and (4) customer base.[8] While no single factor or combination of factors will necessarily provide a dispositive indication of a successor-in-interest relationship, generally, Commerce will consider the new company to be the successor to the previous company if the new company's resulting operation is not materially dissimilar to that of its predecessor.[9] Thus, if the record evidence demonstrates that, with respect to the production and sale of the subject merchandise, the new company operates as the same business entity as the predecessor company, Commerce may assign the new company the cash deposit rate of its predecessor.[10]

We preliminarily determine that Huahui Environmental is the successor-in-interest to Ningxia Huahui. Record evidence, as submitted by Huahui Environmental, indicates that Huahui Environmental operates as essentially the same business entity as Ningxia Huahui with respect to the subject merchandise.[11] For the complete successor-in-interest analysis, *see* the Preliminary Decision Memorandum.

Should our final results remain unchanged from these preliminary results, we will instruct U.S. Customs and Border Protection to assign entries of subject merchandise exported by Huahui Environmental the AD cash deposit rate applicable to Ningxia Huahui (*i.e.,* 0.65 U.S. dollars/kilogram). Commerce will issue its final results of the review in accordance with the time limits set forth in 19 CFR 351.216(e).

## Public Comment

Pursuant to 19 CFR 351.310(c), any interested party may request a hearing within 14 days of publication of this notice.[12] In accordance with 19 CFR 351.309(c)(1)(ii), interested parties may submit case briefs not later than 14 days after the date of publication of this notice.[13] Rebuttal briefs, limited to issues raised in the case briefs, may be filed no later than seven days after the deadline for case briefs, in accordance with 19 CFR 351.309(d).[14] Parties who submit case or rebuttal briefs are encouraged to submit with each argument: (1) A statement of the issue; (2) a brief summary of the argument; and (3) a table of authorities.[15] All comments are to be filed electronically using ACCESS, available to registered users at *https://access.trade.gov,* and must also be served on interested parties. An electronically filed document must be received successfully in its entirety by ACCESS by 5:00 p.m. Eastern Time on the day it is due.[16] Note that Commerce has temporarily modified certain requirements for serving documents containing business proprietary information, until further notice.[17]

Consistent with 19 CFR 351.216(e), Commerce will issue the final results of this CCR no later than 270 days after the date on which this review was initiated, or within 45 days of publication of these preliminary results, if all parties agree to the preliminary finding.

## Notification to Interested Parties

This notice is published in accordance with sections 751(b)(1) and 777(i) of the Act and 19 CFR 351.216(b), and 351.221(c)(3)(ii).

Dated: October 1, 2021.

**Christian Marsh,**

*Acting Assistant Secretary for Enforcement and Compliance.*

## Appendix

**List of Topics Discussed in the Preliminary Decision Memorandum**

I. Summary
II. Background
III. Scope of the Order
IV. Successor-in-Interest Determination
V. Recommendation

[FR Doc. 2021–22052 Filed 10–7–21; 8:45 am]

BILLING CODE 3510–DS–P

[8] *See, e.g., Certain Frozen Warmwater Shrimp from India: Initiation and Preliminary Results of Antidumping Duty Changed Circumstances Review,* 81 FR 75376 (October 31, 2016) (*Shrimp from India Preliminary Results*), unchanged in *Certain Frozen Warmwater Shrimp from India: Notice of Final Results of Antidumping Duty Changed Circumstances Review,* 81 FR 90774 (December 15, 2016) (*Shrimp from India Final Results*).

[9] *See, e.g., Shrimp from India Preliminary Results,* 81 FR at 75377, unchanged in *Shrimp from India Final Results,* 81 FR at 90774.

[10] *Id.*

[11] *See* CCR Request.

[12] Commerce is exercising its discretion under 19 CFR 351.310(c) to alter the time limit for requesting a hearing.

[13] Commerce is exercising its discretion under 19 CFR 351.309(c)(1)(ii) to alter the time limit for the filing of case briefs.

[14] *See Temporary Rule Modifying AD/CVD Service Requirements Due to COVID–19,* 85 FR 17006, 17007 (March 26, 2020).

[15] *See* 19 CFR 351.309(c)(2).

[16] *See* 19 CFR 351.303(b).

[17] *See Temporary Rule Modifying AD/CVD Service Requirements Due to COVID–19; Extension of Effective Period,* 85 FR 41363 (July 10, 2020).

## DEPARTMENT OF COMMERCE

### International Trade Administration

**[A–588–843, A–580–829, A–583–828]**

## Stainless Steel Wire Rod From Japan, the Republic of Korea, and Taiwan: Final Results of the Expedited Sunset Reviews of the Antidumping Duty Orders

**AGENCY:** Enforcement and Compliance, International Trade Administration, Department of Commerce.

**SUMMARY:** As a result of these expedited sunset reviews, the Department of Commerce (Commerce) finds that revocation of the antidumping duty (AD) orders on stainless steel wire rod (SSWR) from Japan, the Republic of Korea (Korea), and Taiwan would be likely to lead to continuation or recurrence of dumping as indicated in the ''Final Results of Sunset Reviews'' section of this notice.

**DATES:** Applicable October 8, 2021.

**FOR FURTHER INFORMATION CONTACT:** Christopher Williams or Minoo Hatten, AD/CVD Operations, Office I, Enforcement and Compliance, International Trade Administration, U.S. Department of Commerce, 1401 Constitution Avenue NW, Washington, DC 20230; telephone: (202) 482–5166 or (202) 482–1690, respectively.

**SUPPLEMENTARY INFORMATION:**

## Background

On July 1, 2021, Commerce published the notice of initiation of the sunset reviews of the AD orders on stainless steel wire rod (SSWR) from Japan, the Republic of Korea (Korea), and Taiwan [1] pursuant to section 751(c) of the Tariff Act of 1930, as amended (the Act).[2] In accordance with 19 CFR 351.218(d)(1)(i) and (ii), Commerce received notices of intent to participate in these sunset reviews from the domestic interested parties [3] within 15 days after the date of

[1] *See Notice of Amendment of Final Determination of Sales at Less Than Fair Value and Antidumping Duty Order: Stainless Steel Wire Rod from Korea,* 63 FR 49331 (September 15, 1998); *see also Notice of Antidumping Duty Order: Stainless Steel Wire Rod from Japan,* 63 FR 49328 (September 15, 1998); and *Notice of Amendment of Final Determination of Sales at Less Than Fair Value and Antidumping Duty Order: Stainless Steel Wire Rod from Taiwan,* 63 FR 49332 (September 15, 1998) (collectively, *AD Orders*).

[2] *See Initiation of Five-Year (Sunset) Reviews,* 86 FR 35070 (July 1, 2021) (*Initiation Notice*).

[3] The domestic interested parties are Carpenter Technology Corporation (Carpenter), North American Stainless (NAS), and Universal Stainless & Alloy Products, Inc. (Universal) (collectively, domestic interested parties).

publication of the *Initiation Notice*.[4] The domestic interested parties claimed interested party status under sections 771(9)(C) and (E) of the Act.

Commerce received adequate substantive responses to the *Initiation Notice* from the domestic interested parties within the 30-day period specified in 19 CFR 351.218(d)(3)(i).[5] Commerce received no substantive responses from any respondent interested parties. In accordance with section 751(c)(3)(B) of the Act and 19 CFR 351.218(e)(1)(ii)(C)(2), Commerce conducted expedited, *i.e.,* 120-day, sunset reviews of the *AD Orders.*

## Scope of the Orders

The merchandise subject to the *AD Orders* is SSWR which is currently classified under subheading 7221.00.0005, 7221.00.0015, 7221.00.0030, 7221.00.0045, and 7221.00.0075 of the Harmonized Tariff Schedule of the United States (HTSUS). The HTSUS subheading is provided for convenience and customs purposes. A full description of the scopes of the *AD Orders* is contained in the Issues and Decision Memorandum.[6] The written description is dispositive.

## Analysis of Comments Received

All issues raised in this review are addressed in the Issues and Decision Memorandum, including the likelihood of continuation or recurrence of dumping in the event of revocation and the magnitude of dumping margins likely to prevail if the order was revoked. Parties can find a complete discussion of all issues raised in this review and the corresponding recommendations in the Issues and Decision Memorandum, which is on file electronically via Enforcement and Compliance's Antidumping and Countervailing Duty Centralized Electronic Service System (ACCESS). ACCESS is available to registered users at *http://access.trade.gov.* In addition, a complete version of the Issues and Decision Memorandum can be found at *https://access.trade.gov/public/FRNoticesListLayout.aspx.*

## Final Results of Sunset Reviews

Pursuant to sections 751(c) and 752(c) of the Act, Commerce determines that revocation of the *AD Orders* would be likely to lead to continuation or recurrence of dumping and the magnitude of the margins of dumping likely to prevail would be weighted-average margins up to the following percentages:

| Country | Weighted-average dumping margin (percent) |
|---|---|
| Japan | 33.58 |
| Korea | 28.44 |
| Taiwan | 2.22 |

## Notification Regarding Administrative Protective Orders

This notice serves as a reminder to parties subject to administrative protective order (APO) of their responsibility concerning the disposition of proprietary information disclosed under APO in accordance with 19 CFR 351.305(a). Timely written notification of the destruction of APO materials or conversion to judicial protective order is hereby requested. Failure to comply with the regulations and terms of an APO is a violation which is subject to sanction.

## Notification to Interested Parties

Commerce is issuing and publishing these final results and notice in accordance with sections 751(c), 752(c), and 777(i)(1) of the Act and 19 CFR 351.221(c)(5)(ii).

Dated: October 4, 2021.

**Christian Marsh,**

*Acting Assistant Secretary for Enforcement and Compliance.*

## Appendix—List of Topics Discussed in the Issues and Decision Memorandum

I. Summary
II. Background
III. Scope of the Orders
IV. History of the Orders
V. Legal Framework
VI. Discussion of the Issues
VII. Final Results of Expedited Sunset Reviews
VIII. Recommendation

[FR Doc. 2021–22030 Filed 10–7–21; 8:45 am]

BILLING CODE 3510–DS–P

[4] *See* Domestic Interested Parties' Letters, ''Five Year ('Sunset') Review of the Antidumping Duty Order on Stainless Steel Wire Rod from Japan—Domestic Interested Parties' Notice of Intent to Participate,'' dated July 15, 2021; *see also* ''Five Year ('Sunset') Review of the Antidumping Duty Order on Stainless Steel Wire Rod from the Republic of Korea—Domestic Interested Parties' Notice of Intent to Participate,'' dated July 15, 2021; and ''Five Year ('Sunset') Review of the Antidumping Duty Order on Stainless Steel Wire Rod from Taiwan—Domestic Interested Parties' Notice of Intent to Participate,'' dated July 15, 2021.

[5] *See* Domestic Interested Parties' Letters, ''Five-Year ('Sunset') Review of Antidumping Duty Order on Stainless Steel Wire Rod from Japan—Domestic Interested Parties' Substantive Response,'' dated August 2, 2021; ''Five-Year ('Sunset') Review Of Antidumping Duty Order on Stainless Steel Wire Rod from the Republic of Korea—Domestic Interested Parties' Substantive Response,'' dated August 2, 2021; and ''Five-Year ('Sunset') Review of Antidumping Duty Order on Stainless Steel Wire Rod from Taiwan—Domestic Interested Parties' Substantive Response,'' dated August 2, 2021.

[6] *See* Memorandum, ''Issues and Decision Memorandum for the Expedited Sunset Reviews of the Antidumping Duty Orders on Stainless Steel Wire Rod from Japan, the Republic of Korea, and Taiwan,'' dated concurrently with, and hereby adopted by, this notice (Issues and Decision Memorandum).

# DEPARTMENT OF COMMERCE

## International Trade Administration

## Subsidy Programs Provided by Countries Exporting Softwood Lumber and Softwood Lumber Products to the United States; Request for Comment

**AGENCY:** Enforcement and Compliance, International Trade Administration, Department of Commerce.

**SUMMARY:** The Department of Commerce (Commerce) seeks public comment on any subsidies, including stumpage subsidies, provided by certain countries exporting softwood lumber or softwood lumber products to the United States during the period January 1, 2021, through June 30, 2021.

**DATES:** Comments must be submitted within 30 days after publication of this notice.

**FOR FURTHER INFORMATION CONTACT:** Kristen Johnson, AD/CVD Operations, Enforcement and Compliance, International Trade Administration, U.S. Department of Commerce, 1401 Constitution Avenue NW, Washington, DC 20230; telephone: (202) 482–4793.

**SUPPLEMENTARY INFORMATION:**

## Background

Pursuant to section 805 of Title VIII of the Tariff Act of 1930 (the Softwood Lumber Act of 2008), the Secretary of Commerce is mandated to submit to the appropriate Congressional committees a report every 180 days on any subsidy provided by countries exporting softwood lumber or softwood lumber products to the United States, including stumpage subsidies. Commerce submitted its last subsidy report to the Congress on June 30, 2021.

## Request for Comments

Given the large number of countries that export softwood lumber and softwood lumber products to the United States, we are soliciting public comment only on subsidies provided by countries which had exports accounting for at least one percent of total U.S. imports of softwood lumber by quantity, as classified under Harmonized Tariff Schedule of the United States (HTSUS) codes 4407.1001, 4407.1100, 4407.1200, 4407.1905, 4407.1906, 4407.1910, during the period January 1, 2021, through June 30, 2021. Official U.S. import data, published by the United

States International Trade Commission's DataWeb, indicate that six countries (Austria, Brazil, Canada, Germany, Romania, and Sweden) exported softwood lumber to the United States during that time period in amounts sufficient to account for at least one percent of U.S. imports of softwood lumber products. We intend to rely on similar previous six-month periods to identify the countries subject to future reports on softwood lumber subsidies. For example, we will rely on U.S. imports of softwood lumber and softwood lumber products during the period July 1, 2021, through December 31, 2021, to select the countries subject for the next report.

Under U.S. trade law, a subsidy exists where an authority: (i) Provides a financial contribution; (ii) provides any form of income or price support within the meaning of Article XVI of the GATT 1994; or (iii) makes a payment to a funding mechanism to provide a financial contribution to a person, or entrusts or directs a private entity to make a financial contribution, if providing the contribution would normally be vested in the government and the practice does not differ in substance from practices normally followed by governments, and a benefit is thereby conferred.[1]

Parties should include in their comments: (1) The country which provided the subsidy; (2) the name of the subsidy program; (3) a brief description (no more than 3–4 sentences) of the subsidy program; and (4) the government body or authority that provided the subsidy.

**Submission of Comments**

As specified above, to be assured of consideration, comments must be received no later than 30 days after the publication of this notice in the **Federal Register**. All comments must be submitted through the Federal eRulemaking Portal at *http://www.regulations.gov,* Docket No. ITA–2021–0007. The materials in the docket will not be edited to remove identifying or contact information, and Commerce cautions against including any information in an electronic submission that the submitter does not want publicly disclosed. Attachments to electronic comments will be accepted in Microsoft Word, Excel, or Adobe PDF formats only.

All comments should be addressed to Ryan Majerus, Deputy Assistant Secretary for Policy and Negotiations, at U.S. Department of Commerce, 1401 Constitution Avenue NW, Washington, DC 20230.

Dated: October 4, 2021.

**Ryan Majerus,**

*Deputy Assistant Secretary for Policy and Negotiations.*

[FR Doc. 2021–22032 Filed 10–7–21; 8:45 am]

**BILLING CODE 3510–DS–P**

[1] *See* section 771(5)(B) of the Tariff Act of 1930, as amended.

---

## DEPARTMENT OF COMMERCE

### International Trade Administration

**[A–570–106]**

### Wooden Cabinets and Vanities and Components Thereof From the People's Republic of China: Notice of Final Results of Antidumping Duty Changed Circumstances Review

**AGENCY:** Enforcement and Compliance, International Trade Administration, Department of Commerce.

**SUMMARY:** On September 2, 2021, the Department of Commerce (Commerce) published the initiation and preliminary results of a changed circumstances review (CCR) of the antidumping duty (AD) order on wooden cabinets and vanities and components thereof (cabinets) from the People's Republic of China (China). For these final results, Commerce continues to find that Goldenhome Living Co., Ltd., (Goldenhome) is the successor-in-interest to Xiamen Goldenhome Co., Ltd., (Xiamen Goldenhome) in the context of the AD order on cabinets from China.

**DATES:** Applicable October 8, 2021.

**FOR FURTHER INFORMATION CONTACT:** Jacob Keller, AD/CVD Operations, Office I, Enforcement and Compliance, International Trade Administration, U.S. Department of Commerce, 1401 Constitution Avenue NW, Washington, DC 20230; telephone: (202) 482–4849.

**SUPPLEMENTARY INFORMATION:**

**Background**

On September 2, 2021, Commerce published the *Initiation and Preliminary Results,* in the **Federal Register**, finding Goldenhome to be the successor-in-interest to Xiamen Goldenhome.[1] In the *Initiation and Preliminary Results,* interested parties were provided an opportunity to comment and request a public hearing regarding our preliminary results. We received no comments from interested parties nor was a public hearing requested.

**Scope of the Order**[2]

The merchandise subject to this *Order* consists of wooden cabinets and vanities that are for permanent installation (including floor mounted, wall mounted, ceiling hung or by attachment of plumbing), and wooden components thereof. Wooden cabinets and vanities and wooden components are made substantially of wood products, including solid wood and engineered wood products (including those made from wood particles, fibers, or other wooden materials such as plywood, strand board, block board, particle board, or fiberboard), or bamboo. Wooden cabinets and vanities consist of a cabinet box (which typically includes a top, bottom, sides, back, base blockers, ends/end panels, stretcher rails, toe kicks, and/or shelves) and may or may not include a frame, door, drawers and/or shelves. Subject merchandise includes wooden cabinets and vanities with or without wood veneers, wood, paper or other overlays, or laminates, with or without non-wood components or trim such as metal, marble, glass, plastic, or other resins, whether or not surface finished or unfinished, and whether or not completed.

Wooden cabinets and vanities are covered by this *Order* whether or not they are imported attached to, or in conjunction with, faucets, metal plumbing, sinks and/or sink bowls, or countertops. If wooden cabinets or vanities are imported attached to, or in conjunction with, such merchandise, only the wooden cabinet or vanity is covered by the scope.

Subject merchandise includes the following wooden component parts of cabinets and vanities: (1) Wooden cabinet and vanity frames (2) wooden cabinet and vanity boxes (which typically include a top, bottom, sides, back, base blockers, ends/end panels, stretcher rails, toe kicks, and/or shelves), (3) wooden cabinet or vanity doors, (4) wooden cabinet or vanity drawers and drawer components (which typically include sides, backs, bottoms, and faces), (5) back panels and end panels, (6) and desks, shelves, and tables that are attached to or incorporated in the subject merchandise.

Subject merchandise includes all unassembled, assembled and/or ''ready

[1] *See Wooden Cabinets and Vanities and Components Thereof from the People's Republic of China: Initiation and Preliminary Results of Antidumping Duty Changed Circumstances Review,* 86 FR 49302 (September 2, 2021) (*Initiation and Preliminary Results*), and accompanying Preliminary Decision Memorandum.

[2] *See Wooden Cabinets and Vanities and Components Thereof from the People's Republic of China: Antidumping Duty Order,* 85 FR 22126 (April 21, 2020) (*Order*).

to assemble'' (RTA) wooden cabinets and vanities, also commonly known as ''flat packs,'' except to the extent such merchandise is already covered by the scope of antidumping and countervailing duty orders on Hardwood Plywood from the People's Republic of China. *See Certain Hardwood Plywood Products from the People's Republic of China: Amended Final Determination of Sales at Less Than Fair Value, and Antidumping Duty Order,* 83 FR 504 (January 4, 2018); *Certain Hardwood Plywood Products from the People's Republic of China: Countervailing Duty Order,* 83 FR 513 (January 4, 2018). RTA wooden cabinets and vanities are defined as cabinets or vanities packaged so that at the time of importation they may include: (1) Wooden components required to assemble a cabinet or vanity (including drawer faces and doors); and (2) parts (*e.g.,* screws, washers, dowels, nails, handles, knobs, adhesive glues) required to assemble a cabinet or vanity. RTAs may enter the United States in one or in multiple packages.

Subject merchandise also includes wooden cabinets and vanities and in-scope components that have been further processed in a third country, including but not limited to one or more of the following: Trimming, cutting, notching, punching, drilling, painting, staining, finishing, assembly, or any other processing that would not otherwise remove the merchandise from the scope of the *Order* if performed in the country of manufacture of the in-scope product.

Excluded from the scope of this *Order,* if entered separate from a wooden cabinet or vanity are:

(1) Aftermarket accessory items which may be added to or installed into an interior of a cabinet and which are not considered a structural or core component of a wooden cabinet or vanity. Aftermarket accessory items may be made of wood, metal, plastic, composite material, or a combination thereof that can be inserted into a cabinet and which are utilized in the function of organization/accessibility on the interior of a cabinet; and include:

- Inserts or dividers which are placed into drawer boxes with the purpose of organizing or dividing the internal portion of the drawer into multiple areas for the purpose of containing smaller items such as cutlery, utensils, bathroom essentials, etc.
- Round or oblong inserts that rotate internally in a cabinet for the purpose of accessibility to foodstuffs, dishware, general supplies, etc.

(2) Solid wooden accessories including corbels and rosettes, which serve the primary purpose of decoration and personalization.

(3) Non-wooden cabinet hardware components including metal hinges, brackets, catches, locks, drawer slides, fasteners (nails, screws, tacks, staples), handles, and knobs.

(4) Medicine cabinets that meet all of the following five criteria are excluded from the scope: (1) Wall mounted; (2) assembled at the time of entry into the United States; (3) contain one or more mirrors; (4) be packaged for retail sale at time of entry; and (5) have a maximum depth of seven inches.

Also excluded from the scope of the *Order* are:

(1) All products covered by the scope of the antidumping duty order on Wooden Bedroom Furniture from the People's Republic of China. *See Notice of Amended Final Determination of Sales at Less Than Fair Value and Antidumping Duty Order: Wooden Bedroom Furniture from the People's Republic of China,* 70 FR 329 (January 4, 2005).

(2) All products covered by the scope of the antidumping and countervailing duty orders on Hardwood Plywood from the People's Republic of China. *See Certain Hardwood Plywood Products from the People's Republic of China: Amended Final Determination of Sales at Less Than Fair Value, and Antidumping Duty Order,* 83 FR 504 (January 4, 2018); *Certain Hardwood Plywood Products from the People's Republic of China: Countervailing Duty Order,* 83 FR 513 (January 4, 2018).

Imports of subject merchandise are classified under Harmonized Tariff Schedule of the United States (HTSUS) statistical numbers 9403.40.9060 and 9403.60.8081. The subject component parts of wooden cabinets and vanities may be entered into the United States under HTSUS statistical number 9403.90.7080. Although the HTSUS subheadings are provided for convenience and customs purposes, the written description of the scope of this *Order* is dispositive.

**Final Results of the Antidumping Duty Changed Circumstances Review**

For the reasons stated in the *Initiation and Preliminary Results,* and because we received no comments from interested parties, Commerce continues to find that Goldenhome is the successor-in-interest to Xiamen Goldenhome for AD purposes. As a result of this determination, we determine that Goldenhome should receive the AD cash deposit rate applicable to Xiamen Goldenhome. Consequently, Commerce will instruct U.S. Customs and Border Protection to suspend liquidation of all shipments of subject merchandise exported by Goldenhome and entered, or withdrawn from warehouse, for consumption on or after the publication date of this notice in the **Federal Register** at the current AD cash-deposit rate applicable to Xiamen Goldenhome.[3] This cash deposit requirement shall remain in effect until further notice.

**Notification to Interested Parties**

This notice is published in accordance with sections 751(b)(1) and 777(i) of the Act, and 19 CFR 351.216(e) and 351.221(c)(3).

Dated: October 4, 2021.

**Christian Marsh,**

*Acting Assistant Secretary for Enforcement and Compliance.*

[FR Doc. 2021–22031 Filed 10–7–21; 8:45 am]

**BILLING CODE 3510–DS–P**

[3] *See Order,* 85 FR at 22127.

## DEPARTMENT OF COMMERCE

### National Institute of Standards and Technology

**[Docket No. 210915–0187]**

### National Cybersecurity Center of Excellence (NCCoE) Data Classification Practices: Facilitating Data-Centric Security Management

**AGENCY:** National Institute of Standards and Technology, Department of Commerce.

**ACTION:** Notice.

**SUMMARY:** The National Institute of Standards and Technology (NIST) invites organizations to provide letters of interest describing products and technical expertise to support and demonstrate security platforms for the *Data Classification Practices: Facilitating Data-Centric Security Management* project. This notice is the initial step for the National Cybersecurity Center of Excellence (NCCoE) in collaborating with technology companies to address cybersecurity challenges identified under the *Data Classification Practices: Facilitating Data-Centric Security Management* project. Participation in the project is open to all interested organizations.

**DATES:** Collaborative activities will commence as soon as enough completed and signed letters of interest have been returned to address all the necessary components and capabilities, but no earlier than November 8, 2021.

**ADDRESSES:** The NCCoE is located at 9700 Great Seneca Highway, Rockville, MD 20850. Letters of interest must be submitted to *data-nccoe@nist.gov* or via hardcopy to National Institute of Standards and Technology, NCCoE; 9700 Great Seneca Highway, Rockville, MD 20850. Interested parties can access the letter of interest template by visiting *https://www.nccoe.nist.gov/projects/building-blocks/data-classification* and completing the letter of interest webform. NIST will announce the completion of the selection of participants and inform the public that it is no longer accepting letters of interest for this project at *https://www.nccoe.nist.gov/projects/building-blocks/data-classification.* Organizations whose letters of interest are accepted will be asked to sign a consortium Cooperative Research and Development Agreement (CRADA) with NIST. An NCCoE consortium CRADA template can be found at: *https://nccoe.nist.gov/library/nccoe-consortium-crada-example.*

**FOR FURTHER INFORMATION CONTACT:** William Newhouse via telephone at 301–975–0232; by email to *data-nccoe@nist.gov;* or by mail to National Institute of Standards and Technology, NCCoE; 9700 Great Seneca Highway, Rockville, MD 20850. Additional details about the *Data Classification Practices: Facilitating Data-Centric Security Management* project are available at *https://www.nccoe.nist.gov/projects/building-blocks/data-classification.*

**SUPPLEMENTARY INFORMATION:**

*Background:* The NCCoE, part of NIST, is a public-private collaboration for accelerating the widespread adoption of integrated cybersecurity tools and technologies. The NCCoE brings together experts from industry, government, and academia under one roof to develop practical, interoperable cybersecurity approaches that address the real-world needs of complex Information Technology (IT) systems. By accelerating dissemination and use of these integrated tools and technologies for protecting IT assets, the NCCoE will enhance trust in U.S. IT communications, data, and storage systems; reduce risk for companies and individuals using IT systems; and encourage development of innovative, job-creating cybersecurity products and services.

*Process:* NIST is soliciting responses from all sources of relevant security capabilities (see below) to enter into a Cooperative Research and Development Agreement (CRADA) to provide products and technical expertise to support and demonstrate security platforms for the *Data Classification Practices: Facilitating Data-Centric Security Management* project. The full project can be viewed at: *https://www.nccoe.nist.gov/projects/building-blocks/data-classification.*

Interested parties can access the template for a letter of interest by visiting the project website at *https://www.nccoe.nist.gov/projects/building-blocks/data-classification* and completing the letter of interest webform. On completion of the webform, interested parties will receive access to the letter of interest template, which the party must complete, certify as accurate, and submit to NIST by email or hardcopy. NIST will contact interested parties if there are questions regarding the responsiveness of the letters of interest to the project objective or requirements identified below. NIST will select participants who have submitted complete letters of interest on a first come, first served basis within each category of product components or capabilities listed below up to the number of participants in each category necessary to carry out this project. When the project has been completed, NIST will post a notice on the *Data Classification Practices: Facilitating Data-Centric Security Management* project website at *https://www.nccoe.nist.gov/projects/building-blocks/data-classification* announcing the completion of the project and informing the public that it will no longer accept letters of interest for this project. Completed letters of interest should be submitted to NIST and will be accepted on a first come, first served basis. There may be continuing opportunity to participate even after initial activity commences for participants who were not selected initially or have submitted the letter of interest after the selection process. Selected participants will be required to enter into a consortium CRADA with NIST (for reference, see **ADDRESSES** section above).

*Project Objective:* Data-centric security management aims to enhance protection of information (data) regardless of where the data resides or with whom it is shared. This requires that organizations know what data they have, what its characteristics are, and what security and privacy requirements it needs to meet so the necessary protections can be achieved. Standardized mechanisms for communicating data characteristics and protection requirements are needed to support zero trust architectures by making data-centric security management feasible at scale.

The project's objective is to develop technology-agnostic recommended practices for defining data classifications and data handling rulesets and for communicating them to others. This project will inform, and may identify opportunities to improve, existing cybersecurity and privacy risk management processes by helping with communicating data classifications and data handling rulesets. It will not replace current risk management practices, laws, regulations, or mandates. The project will define the approach for the solution, independent of the supporting technologies, services, architectures, operational environments, etc. As part of this, a proof-of-concept implementation of the defined approach will be attempted. The proof-of-concept will include limited data discovery, analysis, classification, and labeling capabilities, as well as a rudimentary method for expressing how data with a particular label should be handled for each use case scenario. In support of this phase of the project, basic terminology and concepts will be defined based on existing practices and guidance to provide a common language for discussing data classification. The proposed proof-of-concept solution(s) will integrate commercial and open source products that leverage cybersecurity standards and recommended practices to demonstrate the use case scenarios detailed in the *Data Classification Practices: Facilitating Data-Centric Security Management* project description available at: *https://www.nccoe.nist.gov/projects/building-blocks/data-classification.* This project will result in a publicly available NIST Cybersecurity Practice Guide as a Special Publication 1800 series, a detailed implementation guide of the practical steps needed to implement a cybersecurity reference design that addresses this challenge.

*Requirements for Letters of Interest:* Each responding organization's letter of interest should identify which security platform component(s) or capability(ies) it is offering. Letters of interest should not include company proprietary information, and all components and capabilities must be commercially available. Components are listed in section 3 of the *Data Classification Practices: Facilitating Data-Centric Security Management* project description at *https://www.nccoe.nist.gov/projects/building-blocks/data-classification* and include, but are not limited to:

*Core Components:*

- Endpoints:
  - Client Devices—Various PCs (desktops or laptops) and mobile

devices will be involved in data creation, storage, transmission, retention, and destruction, as well as data-centric security management. Some client devices will be managed by the organization. Some will be used by the organization's employees, while others will be used by people from other organizations.

○ Client Device Apps—The client devices will have commercial-off-the-shelf (COTS) apps used for data lifecycle activities, such as word processing software and email client software.

○ Additional Devices—Examples of additional types of devices that could be utilized are networked printers and Internet of Things (IoT) devices.

• Network/Infrastructure Devices—The architecture will include devices such as firewalls, routers, or switches that are needed for network functionality and network traffic restriction, as well as the software for managing those devices.

• Services and Applications—The architecture will include several types of services and applications that are involved in data lifecycle activities for one or more of the scenarios. The following are examples of possible service and application types:

○ Enterprise Services/Applications: Email, collaboration, file sharing, web conferencing, file/data backup, code repositories, content management systems.

○ Data Services/Applications: Data processing, data analytics, artificial intelligence/machine learning services.

○ Business Services/Applications: A variety of system-to-system and human-to-system business applications, both COTS and custom-written, including those that produce and/or consume data.

• Data Classification Solutions—The architecture will include several types of components used to perform data classification responsibilities, such as data discovery, inventory, analysis, classification, and labeling.

Each responding organization's letter of interest should identify how its products help address one or more of the following desired security characteristics and properties in section 3 of the *Data Classification Practices: Facilitating Data-Centric Security Management* at *https://www.nccoe.nist.gov/projects/building-blocks/data-classification:*

• All data is discovered and analyzed to determine how it should be classified.

• All data classification and data handling ruleset creation, modification, and deletion is restricted to authorized personnel only, with all actions logged and auditable and with all communications protected.

• For all data classifications and data handling rulesets, there is a mechanism for verifying the integrity of the policy or ruleset.

• Data classification labels or tags are assigned to all data.

• For all data classification labels or tags assigned to data, there is a mechanism for verifying the integrity of the label or tag.

In their letters of interest, responding organizations need to acknowledge the importance of and commit to provide:

1. Access for all participants' project teams to component interfaces and the organization's experts necessary to make functional connections among security platform components.

2. Support for development and demonstration of the *Data Classification Practices: Facilitating Data-Centric Security Management* project, which will be conducted in a manner consistent with the following standards and guidance: FIPS 199, NISTIR 8112, FIPS 200, SP 800–37, SP 800–53, SP 800–60, SP 800–63, SP 800–154, SP 800–171, SP 800–207, the NIST Cybersecurity Framework, and the NIST Privacy Framework.

Additional details about the *Data Classification Practices: Facilitating Data-Centric Security Management* project are available at *https://www.nccoe.nist.gov/projects/building-blocks/data-classification.*

NIST cannot guarantee that all of the products proposed by respondents will be used in the demonstration. Each prospective participant will be expected to work collaboratively with NIST staff and other project participants under the terms of the consortium CRADA in the development of the *Data Classification Practices: Facilitating Data-Centric Security Management* project. Prospective participants' contribution to the collaborative effort will include assistance in establishing the necessary interface functionality, connection and set-up capabilities and procedures, demonstration harnesses, environmental and safety conditions for use, integrated platform user instructions, and demonstration plans and scripts necessary to demonstrate the desired capabilities. Each participant will train NIST personnel, as necessary, to operate its product in capability demonstrations. Following successful demonstrations, NIST will publish a description of the security platform and its performance characteristics sufficient to permit other organizations to develop and deploy security platforms that meet the security objectives of the *Data Classification Practices: Facilitating Data-Centric Security Management* project. These descriptions will be public information.

Under the terms of the consortium CRADA, NIST will support development of interfaces among participants' products by providing IT infrastructure, laboratory facilities, office facilities, collaboration facilities, and staff support to component composition, security platform documentation, and demonstration activities.

The dates of the demonstration of the *Data Classification Practices: Facilitating Data-Centric Security Management* project capability will be announced on the NCCoE website at least two weeks in advance at *https://nccoe.nist.gov/.* The expected outcome will demonstrate how the components of the *Data Classification Practices: Facilitating Data-Centric Security Management* project architecture can provide security capabilities to mitigate identified risks related to data throughout its lifecycle. Participating organizations will gain from the knowledge that their products are interoperable with other participants' offerings.

For additional information on the NCCoE governance, business processes, and NCCoE operational structure, visit the NCCoE website *https://nccoe.nist.gov/.*

**Alicia Chambers,**

*NIST Executive Secretariat.*

[FR Doc. 2021–21979 Filed 10–7–21; 8:45 am]

**BILLING CODE 3510–13–P**

## DEPARTMENT OF COMMERCE

### National Oceanic and Atmospheric Administration

**[RTID 0648–XB403]**

### Fisheries of the Caribbean, Gulf of Mexico, and South Atlantic; Exempted Fishing Permit

**AGENCY:** National Marine Fisheries Service (NMFS), National Oceanic and Atmospheric Administration (NOAA), Commerce.

**ACTION:** Notice of receipt of an application for an exempted fishing permit; request for comments.

**SUMMARY:** NMFS announces the receipt of an application for an exempted fishing permit (EFP) from Dr. Matthew Ajermian of Harbor Branch Oceanographic Institute of Florida Atlantic University (FAU). If granted, the EFP would authorize the captain

and crew of certain federally permitted charter vessels to collect limited numbers of snapper-grouper, coastal migratory pelagic, and dolphin and wahoo species in the waters of the U.S. exclusive economic zone (EEZ) off the Florida east coast. The purpose of the EFP is to quantify shark depredation impacts in the recreational fisheries off the Atlantic using a citizen science approach.

**DATES:** Written comments must be received no later than November 8, 2021.

**ADDRESSES:** You may submit comments on the application, identified by ''NOAA–NMFS–2021–0087, by either of the following methods:

*Electronic Submission:* Submit all electronic public comments via the Federal e-Rulemaking Portal. Go to *https://www.regulations.gov* and enter ''NOAA–NMFS–2021–0087'' in the Search box. Click the ''Comment'' icon, complete the required fields, and enter or attach your comments.

*Mail:* Submit written comments to Karla Gore, Southeast Regional Office, NMFS, 263 13th Avenue South, St. Petersburg, FL 33701.

*Instructions:* Comments sent by any other method, to any other address or individual, or received after the end of the comment period, may not be considered by NMFS. All comments received are a part of the public record and will generally be posted for public viewing on *www.regulations.gov* without change. All personal identifying information (*e.g.,* name, address), confidential business information, or otherwise sensitive information submitted voluntarily by the sender will be publicly accessible. NMFS will accept anonymous comments (enter N/A in the required fields if you wish to remain anonymous).

Electronic copies of the EFP application and related documents are available from the website at *https://www.fisheries.noaa.gov/southeast/south-atlantic-exempted-fishing-permits-efp.*

**FOR FURTHER INFORMATION CONTACT:** Karla Gore, 727–824–5305; email: *karla.gore@noaa.gov.*

**SUPPLEMENTARY INFORMATION:** The EFP is requested under the authority of the Magnuson-Stevens Fishery Conservation and Management Act (16 U.S.C. 1801 *et seq.*), and by regulations at 50 CFR 600.745(b) concerning exempted fishing.

Shark depredation is an emerging issue that is reportedly impacting a variety of fisheries in the South Atlantic. The scope of these impacts has not been quantified within the snapper-grouper, coastal migratory pelagic, or dolphin and wahoo recreational fisheries. To gain an improved understanding of these impacts, the applicant requests authorization to collect recreationally harvested snapper-grouper, coastal migratory pelagic, and dolphin and wahoo species with indication of shark depredation. Evidence of shark depredation to these landed fish would include fresh teeth marks and active bleeding; partially removed trunk tissues (scales, skin and muscle); exposed musculature and/or internal organs; or missing fins. Any such fish that are identified as exhibiting shark depredation would be retained by the fishermen, isolated from other recreational catch, and transferred to the scientific team at FAU when the authorized charter vessels return to port. Any such fish so retained would then be swabbed for DNA and assessed to identify the shark species responsible for the depredation.

The applicant and representatives would conduct collections on four federally permitted for-hire charter vessels in the snapper-grouper, coastal migratory pelagic, or dolphin and wahoo fisheries. As a result of project budget limitations and logistics, the applicant and representatives cannot be present on the designated charter vessels for every trip throughout the EFP timeframe and thus seek approval for the charter vessel captains and crews to collect shark depredated fish species opportunistically when the applicant or representatives would not be present on the authorized charter vessels during their fishing trips. These authorized charter vessels would include paying charter passengers, and those passengers may be the individuals who actually catch the fish with evidence of depredation. Any fish with shark depredation caught by paying customers would be turned over to the vessel crew to be subsequently provided to the scientific team at FAU for genetic analysis. Four federally permitted for-hire charter vessel captains have been identified to conduct EFP collection activities when the applicant or representatives are not aboard the authorized charter vessels.

Under the EFP, charter vessels would continue with routine fishing operations using hook and line techniques (bottom fishing and trolling using artificial and natural bait) in natural and hard bottom habitats in Federal waters between Sebastian Inlet and Jupiter Inlet, Florida, ranging from 3 to 30 nautical miles (5.6 to 55.6 km) offshore. NMFS expects that the researchers would collect enough samples over the course of 200 fishing days. Collections would only take place on the approved project charter vessels.

If granted, this EFP would exempt the project's scientists and the captains and crews of the authorized charter vessels from the snapper-grouper seasonal closures and seasonal harvest limitations regulations codified at 50 CFR 622.183, and 50 CFR 622.184; from the landing fish intact regulations at 50 CFR 622.186 (snapper-grouper), 50 CFR 622.276 (dolphin and wahoo), and 50 CFR 622.381 (coastal migratory pelagic); from the recreational bag limit regulations codified at 50 CFR 622.187 (snapper-grouper), 50 CFR 622.277 (dolphin and wahoo), and 50 CFR 622.382 (coastal migratory pelagic); and from the size limit regulations codified at 50 CFR 622.185 (snapper-grouper), 50 CFR 622.275 (dolphin and wahoo), and 50 CFR 622.380 (coastal migratory pelagic). Charter customers aboard the authorized charter vessels would be subject to all current Federal for-hire regulations during the course of routine fishing operations. Only the captain and crew aboard the authorized charter vessels would be permitted to retain species with evidence of shark depredation that may be recreationally harvested out of season, or out of the authorized recreational bag limits or size limits. These shark depredated fish would be provided to the scientific team at FAU at the end of the fishing trip.

The duration of any issued EFP would be from the date of issuance of the EFP through August 1, 2023.

The authorized captain and crew of the charter vessels, during the course of routine operations, would target snapper-grouper, dolphin and wahoo, and coastal migratory pelagic species. Over the course of the EFP, a maximum of 120 total snapper-grouper with evidence of shark depredation would be retained under the EFP. Additionally, over the course of the EFP, a maximum of 60 total dolphin and wahoo, combined, with evidence of shark depredation; and up to 60 total coastal migratory pelagic fish, combined (king mackerel, Spanish mackerel, and cobia), with evidence of shark depredation would be retained.

Under the EFP, the selected and authorized charter vessel captains and crew would retain carcasses of species caught with evidence of shark depredation during the course of normal for-hire charter operations. Shark depredated species carcasses caught opportunistically may be retained under the EFP, even if seasonal closures, minimum size limits, and bag limits are in effect.

NMFS finds this application warrants further consideration based on a preliminary review. Possible conditions the agency may impose on this permit, if it is granted, include but are not limited to, a prohibition on conducting sampling activities within marine protected areas, marine sanctuaries, or special management zones, without additional authorization, and requiring compliance with best practices in the event of interactions with any protected species. NMFS may also require annual reports summarizing the amount of shark-depredated carcasses harvested during the period of effectiveness of any issued EFP. NMFS requires that all federally permitted charter vessels participating under this EFP are compliant with all legal requirements, including the Southeast For-Hire Electronic Reporting Program. Additionally, NMFS would require any sea turtles taken incidentally during the course of the activities to be handled with due care to prevent injury to live specimens, observed for activity, and returned to the water.

A final decision on issuance of the EFP will depend on NMFS' review of public comments received on the application, consultations with the affected state, the South Atlantic Fishery Management Council, and the U.S. Coast Guard, and a determination that it is consistent with all applicable law.

*Authority:* 16 U.S.C. 1801 *et seq.*

Dated: October 4, 2021.

**Jennifer M. Wallace,**

*Acting Director, Office of Sustainable Fisheries, National Marine Fisheries Service.*

[FR Doc. 2021–21982 Filed 10–7–21; 8:45 am]

**BILLING CODE 3510–22–P**

## DEPARTMENT OF COMMERCE

### National Oceanic and Atmospheric Administration

**[RTID 0648–XB498]**

### New England Fishery Management Council; Public Meeting

**AGENCY:** National Marine Fisheries Service (NMFS), National Oceanic and Atmospheric Administration (NOAA), Commerce.

**ACTION:** Notice; public meeting.

**SUMMARY:** The New England Fishery Management Council (Council) is scheduling a public joint meeting of its Habitat Committee and Advisory Panel via webinar to consider actions affecting New England fisheries in the exclusive economic zone (EEZ). Recommendations from this group will be brought to the full Council for formal consideration and action, if appropriate.

**DATES:** This meeting will be held on Tuesday, October 26, 2021 at 9 a.m.

**ADDRESSES:** All meeting participants and interested parties can register to join the webinar at *https://attendee.gotowebinar.com/register/5109344090904881936.*

*Council address:* New England Fishery Management Council, 50 Water Street, Mill 2, Newburyport, MA 01950.

**FOR FURTHER INFORMATION CONTACT:** Thomas A. Nies, Executive Director, New England Fishery Management Council; telephone: (978) 465–0492.

**SUPPLEMENTARY INFORMATION:**

#### Agenda

The Joint Committee and Advisory Panel plan to review and recommend updates to the 2018 Offshore Wind policy. They will discuss other offshore wind-related issues and provide direction for continued Council engagement. The group will also receive updates on offshore aquaculture projects and discuss possible areas for Council engagement. They plan to receive updates from the Habitat Plan Development Team (PDT) on their development of a draft white paper related to habitat management on the Northern Edge of Georges Bank. Also planned is discussion on 2022 habitat-related work priorities. Other business may be discussed as necessary.

Although non-emergency issues not contained in this agenda may come before this group for discussion, those issues may not be the subject of formal action during this meeting. Action will be restricted to those issues specifically listed in this notice and any issues arising after publication of this notice that require emergency action under section 305(c) of the Magnuson-Stevens Act, provided the public has been notified of the Council's intent to take final action to address the emergency.

#### Special Accommodations

This meeting is physically accessible to people with disabilities. Requests for sign language interpretation or other auxiliary aids should be directed to Thomas A. Nies, Executive Director, at (978) 465–0492, at least 5 days prior to the date. This meeting will be recorded. Consistent with 16 U.S.C. 1852, a copy of the recording is available upon request.

*Authority:* 16 U.S.C. 1801 *et seq.*

Dated: October 5, 2021.

**Tracey L. Thompson,**

*Acting Deputy Director, Office of Sustainable Fisheries, National Marine Fisheries Service.*

[FR Doc. 2021–22017 Filed 10–7–21; 8:45 am]

**BILLING CODE 3510–22–P**

## DEPARTMENT OF COMMERCE

### National Oceanic and Atmospheric Administration

### Agency Information Collection Activities; Submission to the Office of Management and Budget (OMB) for Review and Approval; Comment Request; NOAA Coastal Ocean Program Grants Proposal Application Package: Correction

**AGENCY:** National Oceanic & Atmospheric Administration (NOAA), Commerce.

**ACTION:** Correction of revised notice of information collection, request for comment.

**SUMMARY:** The Department of Commerce, in accordance with the Paperwork Reduction Act of 1995 (PRA), invites the general public and other Federal agencies to comment on proposed, and continuing information collections, which helps us assess the impact of our information collection requirements and minimize the public's reporting burden. The purpose of this notice is to allow for an additional 30 days of public comment preceding submission of the collection to OMB, and to serve as a correction of the public comment period incorrectly published in the **Federal Register** on October 6, 2021 (86 FR 54941).

**DATES:** To ensure consideration, comments regarding this proposed information collection must be received on or before November 8, 2021.

**ADDRESSES:** Interested persons are invited to submit written comments to Adrienne Thomas, NOAA PRA Officer, at *Adrienne.thomas@noaa.gov.* Please reference OMB Control Number 0648–0384 in the subject line of your comments. Do not submit Confidential Business Information or otherwise sensitive or protected information.

**FOR FURTHER INFORMATION CONTACT:** Requests for additional information or specific questions related to collection activities should be directed to Laurie Golden, Grants Administrator, 240–533–0285 or *laurie.golden@noaa.gov.*

**SUPPLEMENTARY INFORMATION:**

#### I. Abstract

This request is for a revision and extension of a currently approved

information collection. The National Oceanic and Atmospheric Administration's Coastal Ocean Program (COP), now known as the Competitive Research Program (CRP) under the National Centers for Coastal Ocean Science, provides direct financial assistance through grants and cooperative agreements for research supporting the management of coastal ecosystems and the NOAA RESTORE Science Program (RSP). The statutory authority for COP is Public Law 102–567 Section 201 (Coastal Ocean Program). NOAA was authorized to establish and administer the Restore Science Program, in consultation with the U.S. Fish and Wildlife Service, by the Resources and Ecosystems Sustainability, Tourist Opportunities, and Revived Economies (RESTORE) of the Gulf States Act of 2012 (Pub. L. 112–141, Section 1604). Identified in the RESTORE Act as the Gulf Coast Ecosystem restoration Science, Observation, Monitoring, and Technology Program, the Program is commonly known as the NOAA RESTORE Science Program. In addition to standard government application requirements, applicants for financial assistance are required to submit a project summary form, current and pending form, and a key contacts form for both programs. CRP recipients are required to file annual progress reports and a project final report using CRP formats. The RSP are required to file semi-annual progress reports, a final report, and a Gantt chart showing project milestones using RSP formats. All of these requirements are needed for better evaluation of proposals and monitoring of awards.

Several revisions are being requested for this information collection. The approved annual and final reports for CRP will be revised to include the request for publication digital object identifiers (DOIs). The RSP semi-annual and final reports will be revised to include end-user details. Finally, the Current and Pending Support form is being updated to require applicants disclose all sources of current and pending research support, contractual or otherwise, direct and indirect, including current and pending private and public sources of funding or income, both foreign and domestic. Other support should include all resources made available to a Covered Person in support of and/or related to all of their professional research and development efforts, including resources provided directly to the Covered Person rather than through the research institution, and regardless of whether they have monetary value (*e.g.,* even if the support received is only in-kind, such as office/laboratory space, equipment, supplies, or employees). This should include resource and/or financial support from all foreign and domestic entities, including but not limited to, gifts provided with terms or conditions, financial support for laboratory personnel, and participation of student and visiting researchers supported by other sources of funding.

## II. Method of Collection

Respondents have a choice of either electronic or paper forms.

## III. Data

*OMB Control Number:* 0648–0384.

*Form Number:* None.

*Type of Review:* Regular submission (revision/extension of a currently approved collection).

*Affected Public:* Non-profit institutions; State, local, or tribal government; business or other for-profit organizations.

*Estimated Number of Respondents:* 1,200.

*Estimated Time per Response:* 30 minutes each for a project summary, key contacts and current and pending federal support; 6 hours for a semi-annual report; 6 hours for an annual report, 10.5 hours for a CRP final report, 10.5 hours for the RSP final report; and 1 hour for the milestone Gantt chart.

*Estimated Total Annual Burden Hours:* 1,875.

*Estimated Total Annual Cost to Public:* $0 in recordkeeping/reporting costs.

*Respondent's Obligation:* Mandatory.

## IV. Request for Comments

We are soliciting public comments to permit the Department/Bureau to: (a) Evaluate whether the proposed information collection is necessary for the proper functions of the Department, including whether the information will have practical utility; (b) Evaluate the accuracy of our estimate of the time and cost burden for this proposed collection, including the validity of the methodology and assumptions used; (c) Evaluate ways to enhance the quality, utility, and clarity of the information to be collected; and (d) Minimize the reporting burden on those who are to respond, including the use of automated collection techniques or other forms of information technology.

Comments that you submit in response to this notice are a matter of public record. We will include or summarize each comment in our request to OMB to approve this ICR. Before including your address, phone number, email address, or other personal identifying information in your comment, you should be aware that your entire comment—including your personal identifying information—may be made publicly available at any time. While you may ask us in your comment to withhold your personal identifying information from public review, we cannot guarantee that we will be able to do so.

**Sheleen Dumas,**

*Department PRA Clearance Officer, Office of the Chief Information Officer, Commerce Department.*

[FR Doc. 2021–22073 Filed 10–7–21; 8:45 am]

BILLING CODE 3510–JS–P

# COMMITTEE FOR PURCHASE FROM PEOPLE WHO ARE BLIND OR SEVERELY DISABLED

## Procurement List; Proposed Deletions

**AGENCY:** Committee for Purchase From People Who Are Blind or Severely Disabled.

**ACTION:** Proposed deletions from the Procurement List.

**SUMMARY:** The Committee is proposing to delete product(s) and service(s) from the Procurement List that were furnished by nonprofit agencies employing persons who are blind or have other severe disabilities.

**DATES:** *Comments must be received on or before:* November 7, 2021.

**ADDRESSES:** Committee for Purchase From People Who Are Blind or Severely Disabled, 1401 S Clark Street, Suite 715, Arlington, Virginia 22202–4149.

**FOR FURTHER INFORMATION CONTACT:** For further information or to submit comments contact: Michael R. Jurkowski, Telephone: (703) 785–6404, or email *CMTEFedReg@AbilityOne.gov.*

**SUPPLEMENTARY INFORMATION:** This notice is published pursuant to 41 U.S.C. 8503(a)(2) and 41 CFR 51–2.3. Its purpose is to provide interested persons an opportunity to submit comments on the proposed actions.

### Deletions

The following product(s) and service(s) are proposed for deletion from the Procurement List:

*Product(s)*

*NSN(s)—Product Name(s):*

8105–LL–S04–8762—Bag, Polyethylene, PCB Waste, 24W″ x 10D″ x 36L″, Opaque White

8105–LL–S04–9869—Bag, Polyethylene, PCB Waste, 24W″ x 10D″ x 48L″, Opaque White

*Designated Source of Supply:* Open Door

Center, Valley City, ND
*Contracting Activity:* DLA MARITIME—PUGET SOUND, BREMERTON, WA

*Service(s)*

*Service Type:* Mailroom Operation
*Mandatory for:* Federal Deposit Insurance Corporation: 1910 Pacific Avenue, Dallas, TX
*Designated Source of Supply:* Dallas Lighthouse for the Blind, Inc., Dallas, TX
*Contracting Activity:* HEALTH AND HUMAN SERVICES, DEPARTMENT OF, DEPT OF HHS

*Service Type:* Property Management Services
*Mandatory for:* National Park Service, Horace M. Albright Training Center, Grand Canyon, AZ 1 Albright Avenue, Grand Canyon, AZ
*Designated Source of Supply:* Trace, Inc., Boise, ID
*Contracting Activity:* NATIONAL PARK SERVICE, WASO WCP CONTRACTING

**Michael R. Jurkowski,**

*Acting Director, Business Operations.*

[FR Doc. 2021–22060 Filed 10–7–21; 8:45 am]

**BILLING CODE 6353–01–P**

## DEPARTMENT OF EDUCATION

**[Docket No.: ED–2021–SCC–0144]**

### Agency Information Collection Activities; Submission to the Office of Management and Budget for Review and Approval; Comment Request; Application for New Grants Under the Ronald E. McNair Postbaccalaureate Achievement Program

**AGENCY:** Office of Postsecondary Education (OPE), Department of Education (ED).

**ACTION:** Notice.

**SUMMARY:** In accordance with the Paperwork Reduction Act of 1995, ED is proposing a reinstatement with change of a previously approved collection.

**DATES:** Interested persons are invited to submit comments on or before November 8, 2021.

**ADDRESSES:** Written comments and recommendations for proposed information collection requests should be sent within 30 days of publication of this notice to *www.reginfo.gov/public/do/PRAMain.* Find this information collection request by selecting ''Department of Education'' under ''Currently Under Review,'' then check ''Only Show ICR for Public Comment'' checkbox. Comments may also be sent to *ICDocketmgr@ed.gov.*

**FOR FURTHER INFORMATION CONTACT:** For specific questions related to collection activities, please contact Carmen Gordon, 202–453–7311.

**SUPPLEMENTARY INFORMATION:** The Department of Education (ED), in accordance with the Paperwork Reduction Act of 1995 (PRA) (44 U.S.C. 3506(c)(2)(A)), provides the general public and Federal agencies with an opportunity to comment on proposed, revised, and continuing collections of information. This helps the Department assess the impact of its information collection requirements and minimize the public's reporting burden. It also helps the public understand the Department's information collection requirements and provide the requested data in the desired format. ED is soliciting comments on the proposed information collection request (ICR) that is described below. The Department of Education is especially interested in public comment addressing the following issues: (1) Is this collection necessary to the proper functions of the Department; (2) will this information be processed and used in a timely manner; (3) is the estimate of burden accurate; (4) how might the Department enhance the quality, utility, and clarity of the information to be collected; and (5) how might the Department minimize the burden of this collection on the respondents, including through the use of information technology. Please note that written comments received in response to this notice will be considered public records.

*Title of Collection:* Application for New Grants Under the Ronald E. McNair Postbaccalaureate Achievement Program.

*OMB Control Number:* 1840–0619.

*Type of Review:* A reinstatement with change of a previously approved collection.

*Respondents/Affected Public:* State, Local, and Tribal Governments.

*Total Estimated Number of Annual Responses:* 357.

*Total Estimated Number of Annual Burden Hours:* 14,247.

*Abstract:* The Department of Education is requesting a reinstatement with change of the application for grants under the Ronald E. McNair Postbaccalaureate Achievement (McNair) Program. The Department is requesting a reinstatement with change because the previous McNair application expired in December 2019 and the application will be needed for a Fiscal Year (FY) 2022 competition for new awards. The Department expects an increase in respondents for the FY 2022 competition for new awards.

This collection is being submitted under the Streamlined Clearance Process for Discretionary Grant Information Collections (1894–0001). Therefore, the 30-day public comment period notice will be the only public comment notice published for this information collection.

Dated: October 5, 2021.

**Kate Mullan,**

*PRA Coordinator, Strategic Collections and Clearance Governance and Strategy Division, Office of Chief Data Officer, Office of Planning, Evaluation and Policy Development.*

[FR Doc. 2021–22000 Filed 10–7–21; 8:45 am]

**BILLING CODE 4000–01–P**

## DEPARTMENT OF ENERGY

**[Docket No. 21–98–LNG]**

### Freeport LNG Expansion, L.P.; FLNG Liquefaction, LLC; FLNG Liquefaction 2, LLC; and FLNG Liquefaction 3, LLC; Application for Long-Term Authorization To Export Liquefied Natural Gas to Non-Free Trade Agreement Nations

**AGENCY:** Office of Fossil Energy and Carbon Management, Department of Energy.

**ACTION:** Notice of application.

**SUMMARY:** The Office of Fossil Energy and Carbon Management (FECM) of the Department of Energy (DOE) gives notice (Notice) of receipt of an Application (Application), filed on September 10, 2021, by Freeport LNG Expansion, L.P.; FLNG Liquefaction, LLC; FLNG Liquefaction 2, LLC; and FLNG Liquefaction 3, LLC (collectively, FLEX). FLEX requests authority to engage in additional long-term, multi-contract exports of domestically produced liquefied natural gas (LNG) in a volume equivalent to 88 billion cubic feet per year (Bcf/yr) of natural gas from the Freeport LNG Liquefaction Project (the Liquefaction Project) at the Freeport LNG Terminal on Quintana Island near Freeport, Texas, to non-free trade agreement countries. FLEX filed the Application under the Natural Gas Act (NGA).

**DATES:** Protests, motions to intervene, or notices of intervention, as applicable, and written comments are to be filed electronically as detailed in the Public Comment Procedures section no later than 4:30 p.m., Eastern time, December 7, 2021.

**ADDRESSES:**

*Electronic Filing by email: fergas@hq.doe.gov.*

Although DOE has routinely accepted public comment submissions through a variety of mechanisms, including postal mail and hand delivery/courier, DOE has found it necessary to make temporary modifications to the comment submission process in light of

the ongoing Covid–19 pandemic. DOE is currently accepting only electronic submissions at this time. If a commenter finds that this change poses an undue hardship, please contact Office of Resource Sustainability staff at (202) 586–2627 or (202) 586–4749 to discuss the need for alternative arrangements. Once the Covid–19 pandemic health emergency is resolved, DOE anticipates resuming all of its regular options for public comment submission, including postal mail and hand delivery/courier.

**FOR FURTHER INFORMATION CONTACT:**

Amy Sweeney or Jennifer Wade, U.S. Department of Energy (FE–34), Office of Fossil Energy and Carbon Management, [1] Office of Regulation, Analysis, and Engagement, Office of Resource Sustainability, Forrestal Building, Room 3E–042, 1000 Independence Avenue SW, Washington, DC 20585, (202) 586–2627; (202) 586–4749, *amy.sweeney@hq.doe.gov* or *jennifer.wade@hq.doe.gov*

Cassandra Bernstein, U.S. Department of Energy (GC–76), Office of the Assistant General Counsel for Electricity and Fossil Energy, Forrestal Building, Room 6D–033, 1000 Independence Avenue SW, Washington, DC 20585, (202) 586–9793, *cassandra.bernstein@hq.doe.gov*

**SUPPLEMENTARY INFORMATION:** Currently, in Docket Nos. 10–161–LNG,[2] 11–161–LNG,[3] and 16–108–LNG,[4] FLEX is authorized to export domestically produced LNG from the Liquefaction Project in a total combined volume equivalent to 782 Bcf/yr of natural gas to any country with which the United States has not entered into a free trade agreement (FTA) requiring national treatment for trade in natural gas, and with which trade is not prohibited by U.S. law or policy (non-FTA countries), through December 31, 2050, pursuant to NGA section 3(a), 15 U.S.C. 717b(a).[5] In this Application filed in Docket No. 21–98–LNG, FLEX requests long-term, multi-contract authorization to export LNG in an additional volume of 88 Bcf/yr from the Liquefaction Project. FLEX states that this Application, if granted, would increase its non-FTA exports from the Liquefaction Project from a total of 782 Bcf/yr to 870 Bcf/yr of natural gas.

FLEX further states that, on June 29, 2021, it filed an application at FERC (FERC Docket No. CP21–470–000) requesting authorization to increase the Liquefaction Project's authorized maximum LNG production capacity from 782 Bcf/yr to approximately 870 Bcf/yr. FLEX states the instant Application seeks to align FLEX's export authority to non-FTA countries with the liquefaction production capacity requested in its pending FERC application.

FLEX seeks to export this LNG on its own behalf and as agent for other entities who hold title to the LNG at the time of export. Additional details can be found in FLEX's Application, posted on the DOE website at: *www.energy.gov/sites/default/files/2021-09/21-98-LNG.pdf.*

## DOE Evaluation

In reviewing FLEX's Application, DOE will consider any issues required by law or policy. DOE will consider domestic need for the natural gas, as well as any other issues determined to be appropriate, including whether the arrangement is consistent with DOE's policy of promoting competition in the marketplace by allowing commercial parties to freely negotiate their own trade arrangements. As part of this analysis, DOE will consider the study entitled, *Macroeconomic Outcomes of Market Determined Levels of U.S. LNG Exports* (2018 LNG Export Study),[6] and DOE's response to public comments received on that Study.[7]

Additionally, DOE will consider the following environmental documents:

- *Addendum to Environmental Review Documents Concerning Exports of Natural Gas From the United States,* 79 FR 48132 (Aug. 15, 2014);[8]
- *Life Cycle Greenhouse Gas Perspective on Exporting Liquefied Natural Gas From the United States,* 79 FR 32260 (June 4, 2014);[9] and
- *Life Cycle Greenhouse Gas Perspective on Exporting Liquefied Natural Gas From the United States: 2019 Update,* 84 FR 49278 (Sept. 19, 2019), and DOE's response to public comments received on that study.[10]

Parties that may oppose this Application should address these issues and documents in their comments and protests, as well as other issues deemed relevant to the Application.

The National Environmental Policy Act (NEPA), 42 U.S.C. 4321 *et seq.,* requires DOE to give appropriate consideration to the environmental effects of its proposed decisions. No final decision will be issued in this proceeding until DOE has met its environmental responsibilities.

## Public Comment Procedures

In response to this Notice, any person may file a protest, comments, or a motion to intervene or notice of intervention, as applicable. Interested parties will be provided 60 days from the date of publication of this Notice in which to submit comments, protests, motions to intervene, or notices of intervention.

Any person wishing to become a party to the proceeding must file a motion to intervene or notice of intervention. The filing of comments or a protest with respect to the Application will not serve to make the commenter or protestant a party to the proceeding, although protests and comments received from persons who are not parties will be considered in determining the

[1] The Office of Fossil Energy changed its name to the Office of Fossil Energy and Carbon Management on July 4, 2021.

[2] *Freeport LNG Expansion, L.P., et al.,* DOE/FE Order No. 3282–C, Docket No. 10–161–LNG, Final Opinion and Order Granting Long-Term Multi-Contract Authorization to Export Liquefied Natural Gas by Vessel from the Freeport LNG Terminal on Quintana Island, Texas, to Non-Free Trade Agreement Nations (Nov. 14, 2014), *amended by* DOE/FE Order No. 3282–D (Oct. 21, 2020) (extending export term).

[3] *Freeport LNG Expansion, L.P., et al.,* DOE/FE Order No. 3357–B, Docket No. 11–161–LNG, Final Opinion and Order Granting Long-Term Multi-Contract Authorization to Export Liquefied Natural Gas by Vessel from the Freeport LNG Terminal on Quintana Island, Texas, to Non-Free Trade Agreement Nations (Nov. 14, 2014), *reh'g denied* DOE/FE Order No. 3357–C (Dec. 4, 2015), *amended by* DOE/FE Order No. 3357–D (Oct. 21, 2020) (extending export term).

[4] *Freeport LNG Expansion, L.P., et al.,* DOE/FE Order No. 3957, Docket No. 16–108–LNG, Opinion and Order Granting Long-Term, Multi-Contract Authorization to Export Liquefied Natural Gas by Vessel from the Freeport LNG Terminal on Quintana Island, Texas, to Non-Free Trade Agreement Nations (Dec. 19, 2016), *amended by* DOE/FE Order No. 3957–A (Oct. 21, 2020) (extending export term).

[5] FLEX notes that, in Docket Nos. 10–160–LNG and 12–06–LNG, it is authorized to export LNG from the Liquefaction Project to FTA countries in a volume equivalent to 1,022 Bcf/yr of natural gas. FLEX's FTA exports are not at issue here.

[6] *See* NERA Economic Consulting, Macroeconomic Outcomes of Market Determined Levels of U.S. LNG Exports (June 7, 2018), available at: *www.energy.gov/sites/prod/files/2018/06/f52/Macroeconomic%20LNG%20Export%20Study%202018.pdf.*

[7] U.S. Dep't of Energy, Study on Macroeconomic Outcomes of LNG Exports: Response to Comments Received on Study; Notice of Response to Comments, 83 FR 67251 (Dec. 28, 2018).

[8] The Addendum and related documents are available at: *https://energy.gov/fe/draft-addendum-environmental-review-documents-concerning-exports-natural-gas-united-states.*

[9] The 2014 Life Cycle Greenhouse Gas Report is available at: *https://energy.gov/fe/life-cycle-greenhouse-gas-perspective-exporting-liquefied-natural-gas-united-states.*

[10] U.S. Dep't of Energy, Life Cycle Greenhouse Gas Perspective on Exporting Liquefied Natural Gas From the United States: 2019 Update—Response to Comments, 85 FR 72 (Jan. 2, 2020). The 2019 Update and related documents are available at: *https://fossil.energy.gov/app/docketindex/docket/index/21.*

appropriate action to be taken on the Application. All protests, comments, motions to intervene, or notices of intervention must meet the requirements specified by the regulations in 10 CFR part 590.

As noted, DOE is only accepting electronic submissions at this time. Please email the filing to *fergas@hq.doe.gov.* All filings must include a reference to ''Docket No. 21–98–LNG'' or ''Freeport LNG Expansion, L.P. *et al.* Application'' in the title line.

*Please Note:* Please include all related documents and attachments (*e.g.,* exhibits) in the original email correspondence. Please do not include any active hyperlinks or password protection in any of the documents or attachments related to the filing. All electronic filings submitted to DOE must follow these guidelines to ensure that all documents are filed in a timely manner. Any hardcopy filing submitted greater in length than 50 pages must also include, at the time of the filing, a digital copy on disk of the entire submission.

The Application and any filed protests, motions to intervene, notices of interventions, and comments will also be available electronically by going to the following DOE web address: *https://www.energy.gov/fecm/division-natural-gas-regulation.*

A decisional record on the Application will be developed through responses to this Notice by parties, including the parties' written comments and replies thereto. Additional procedures will be used as necessary to achieve a complete understanding of the facts and issues. If an additional procedure is scheduled, notice will be provided to all parties. If no party requests additional procedures, a final Opinion and Order may be issued based on the official record, including the Application and responses filed by parties pursuant to this Notice, in accordance with 10 CFR 590.316.

Signed in Washington, DC, on October 5, 2021.

**Amy Sweeney,**

*Director, Office of Regulation, Analysis, and Engagement, Office of Resource Sustainability.*

[FR Doc. 2021–22018 Filed 10–7–21; 8:45 am]

**BILLING CODE 6450–01–P**

## DEPARTMENT OF ENERGY

### Federal Energy Regulatory Commission

**[Docket No. CP21–499–000]**

### Columbia Gas Transmission, LLC; Notice of Request Under Blanket Authorization and Establishing Intervention and Protest Deadline

Take notice that on September 23, 2021, Columbia Gas Transmission, LLC, 700 Louisiana Street, Suite 1300, Houston, Texas 77002–2700, filed in the above referenced docket, a prior notice pursuant to sections 157.205, 157.208 and 157.216 of the Federal Energy Regulatory Commission's regulations under the Natural Gas Act, requesting authorization to replace a portion of its existing line 1485 consisting of approximately 1.78 miles of 20-inch diameter bare steel pipeline, to replace launcher and receiver facilities, located in Allegheny and Washington Counties, Pennsylvania (Line 1485 Replacement Project). Columbia proposes to replace the facilities under authorities granted by its blanket certificate issued in Docket No. CP82–480–000.[1] The proposed replacement will have no impact on Colombia's existing customers or affect its existing storage operations. The estimated cost for the Project is approximately $23.3 million, all as more fully set forth in the request which is on file with the Commission and open to public inspection.

In addition to publishing the full text of this document in the **Federal Register**, the Commission provides all interested persons an opportunity to view and/or print the contents of this document via the internet through the Commission's Home Page (*http://ferc.gov*) using the ''eLibrary'' link. Enter the docket number excluding the last three digits in the docket number field to access the document. At this time, the Commission has suspended access to the Commission's Public Reference Room, due to the proclamation declaring a National Emergency concerning the Novel Coronavirus Disease (COVID–19), issued by the President on March 13, 2020. For assistance, contact the Federal Energy Regulatory Commission at *FERCOnlineSupport@ferc.gov* or call toll-free, (886) 208–3676 or TYY, (202) 502–8659.

Any questions concerning this application should be directed to David A. Alonzo, Manager Project Authorizations, Columbia Gas Transmission, LLC, 700 Louisiana Street, Suite 1300, Houston, Texas 77002–2700, or by phone at 832.320.5477, or by email at *David_alonzo@tcenergy.com.*

Pursuant to Section 157.9 of the Commission's Rules of Practice and Procedure,[2] within 90 days of this Notice the Commission staff will either: Complete its environmental review and place it into the Commission's public record (eLibrary) for this proceeding; or issue a Notice of Schedule for Environmental Review. If a Notice of Schedule for Environmental Review is issued, it will indicate, among other milestones, the anticipated date for the Commission staff's issuance of the final environmental impact statement (FEIS) or environmental assessment (EA) for this proposal. The filing of an EA in the Commission's public record for this proceeding or the issuance of a Notice of Schedule for Environmental Review will serve to notify federal and state agencies of the timing for the completion of all necessary reviews, and the subsequent need to complete all federal authorizations within 90 days of the date of issuance of the Commission staff's FEIS or EA.

**Public Participation**

There are three ways to become involved in the Commission's review of this project: You can file a protest to the project, you can file a motion to intervene in the proceeding, and you can file comments on the project. There is no fee or cost for filing protests, motions to intervene, or comments. The deadline for filing protests, motions to intervene, and comments is 5:00 p.m. Eastern Time on December 3, 2021. How to file protests, motions to intervene, and comments is explained below.

*Protests*

Pursuant to section 157.205 of the Commission's regulations under the NGA,[3] any person [4] or the Commission's staff may file a protest to the request. If no protest is filed within the time allowed or if a protest is filed and then withdrawn within 30 days after the allowed time for filing a protest, the proposed activity shall be deemed to be authorized effective the day after the time allowed for protest. If a protest is filed and not withdrawn within 30 days after the time allowed for filing a protest, the instant request for

[1] *Michigan Wisconsin Pipe Line Company,* 20 FERC ¶ 62,595 (1982).

[2] 18 CFR (Code of Federal Regulations) 157.9.

[3] 18 CFR 157.205.

[4] Persons include individuals, organizations, businesses, municipalities, and other entities. 18 CFR 385.102(d).

authorization will be considered by the Commission.

Protests must comply with the requirements specified in section 157.205(e) of the Commission's regulations,[5] and must be submitted by the protest deadline, which is December 3, 2021. A protest may also serve as a motion to intervene so long as the protestor states it also seeks to be an intervenor.

*Interventions*

Any person has the option to file a motion to intervene in this proceeding. Only intervenors have the right to request rehearing of Commission orders issued in this proceeding and to subsequently challenge the Commission's orders in the U.S. Circuit Courts of Appeal.

To intervene, you must submit a motion to intervene to the Commission in accordance with Rule 214 of the Commission's Rules of Practice and Procedure[6] and the regulations under the NGA[7] by the intervention deadline for the project, which is December 3, 2021. As described further in Rule 214, your motion to intervene must state, to the extent known, your position regarding the proceeding, as well as your interest in the proceeding. For an individual, this could include your status as a landowner, ratepayer, resident of an impacted community, or recreationist. You do not need to have property directly impacted by the project in order to intervene. For more information about motions to intervene, refer to the FERC website at *https://www.ferc.gov/resources/guides/how-to/intervene.asp.*

All timely, unopposed motions to intervene are automatically granted by operation of Rule 214(c)(1). Motions to intervene that are filed after the intervention deadline are untimely and may be denied. Any late-filed motion to intervene must show good cause for being late and must explain why the time limitation should be waived and provide justification by reference to factors set forth in Rule 214(d) of the Commission's Rules and Regulations. A person obtaining party status will be placed on the service list maintained by the Secretary of the Commission and will receive copies (paper or electronic) of all documents filed by the applicant and by all other parties.

*Comments*

Any person wishing to comment on the project may do so. The Commission considers all comments received about the project in determining the appropriate action to be taken. To ensure that your comments are timely and properly recorded, please submit your comments on or before December 3, 2021. The filing of a comment alone will not serve to make the filer a party to the proceeding. To become a party, you must intervene in the proceeding.

*How To File Protests, Interventions, and Comments*

There are two ways to submit protests, motions to intervene, and comments. In both instances, please reference the Project docket number CP21–499–000 in your submission.

(1) You may file your protest, motion to intervene, and comments by using the Commission's eFiling feature, which is located on the Commission's website (*www.ferc.gov*) under the link to Documents and Filings. New eFiling users must first create an account by clicking on ''eRegister.'' You will be asked to select the type of filing you are making; first select General'' and then select ''Protest'', ''Intervention'', or ''Comment on a Filing''; or[8]

(2) You can file a paper copy of your submission by mailing it to the address below. Your submission must reference the Project docket number CP21–499–000.

To mail via USPS, use the following address: Kimberly D. Bose, Secretary, Federal Energy Regulatory Commission, 888 First Street NE, Washington, DC 20426

To mail via any other courier, use the following address: Kimberly D. Bose, Secretary, Federal Energy Regulatory Commission, 12225 Wilkins Avenue, Rockville, Maryland 20852

The Commission encourages electronic filing of submissions (option 1 above) and has eFiling staff available to assist you at (202) 502–8258 or *FercOnlineSupport@ferc.gov.*

Protests and motions to intervene must be served on the applicant either by mail or email (with a link to the document) at: David A. Alonzo, Manager Project Authorizations, Columbia Gas Transmission, LLC, 700 Louisiana Street, Suite 1300, Houston, Texas 77002–2700, or by phone at 832.320.5477, or by email at *David_alonzo@tcenergy.com.* Any subsequent submissions by an intervenor must be served on the applicant and all other parties to the proceeding. Contact information for parties can be downloaded from the service list at the eService link on FERC Online.

**Tracking the Proceeding**

Throughout the proceeding, additional information about the project will be available from the Commission's Office of External Affairs, at (866) 208–FERC, or on the FERC website at *www.ferc.gov* using the ''eLibrary'' link as described above. The eLibrary link also provides access to the texts of all formal documents issued by the Commission, such as orders, notices, and rulemakings.

In addition, the Commission offers a free service called eSubscription which allows you to keep track of all formal issuances and submittals in specific dockets. This can reduce the amount of time you spend researching proceedings by automatically providing you with notification of these filings, document summaries, and direct links to the documents. For more information and to register, go to *www.ferc.gov/docs-filing/esubscription.asp.*

Dated: October 4, 2021.

**Kimberly D. Bose,**

*Secretary.*

[FR Doc. 2021–22066 Filed 10–7–21; 8:45 am]

**BILLING CODE 6717–01–P**

[5] 18 CFR 157.205(e).

[6] 18 CFR 385.214.

[7] 18 CFR 157.10.

[8] Additionally, you may file your comments electronically by using the eComment feature, which is located on the Commission's website at *www.ferc.gov* under the link to Documents and Filings. Using eComment is an easy method for interested persons to submit brief, text-only comments on a project.

## DEPARTMENT OF ENERGY

## Federal Energy Regulatory Commission

**[Project No. 7590–015]**

## City of Nashua, New Hampshire; Notice of Effectiveness of Withdrawal of Exemption Amendment Application

On June 1, 2021, the City of Nashua, New Hampshire (City of Nashua) filed an application to amend the exemption from licensing for the Jackson Mills Project No. 7590. On September 14, 2021, the City of Nashua notified the Commission that it was withdrawing its application.

No motion in opposition to the notice of withdrawal has been filed, and the Commission has taken no action to disallow the withdrawal. Pursuant to Rule 216(b) of the Commission's Rules of Practice and Procedure,[1] the withdrawal of the amendment application became effective on September 29, 2021, and this proceeding is hereby terminated.

[1] 18 CFR 385.216(b) (2020).

Dated: October 4, 2021.

**Kimberly D. Bose,**

*Secretary.*

[FR Doc. 2021–22065 Filed 10–7–21; 8:45 am]

**BILLING CODE 6717–01–P**

## DEPARTMENT OF ENERGY

### Federal Energy Regulatory Commission

### Combined Notice of Filings

Take notice that the Commission has received the following Natural Gas Pipeline Rate and Refund Report filings:

**Filings Instituting Proceedings**

*Docket Numbers:* RP22–21–000.
*Applicants:* Rover Pipeline LLC.
*Description:* § 4(d) Rate Filing: Summary of Negotiated Rate Capacity Release Agreements on 10–4–21 to be effective 10/1/2021.
*Filed Date:* 10/4/21.
*Accession Number:* 20211004–5007.
*Comment Date:* 5 p.m. ET 10/18/21.

The filings are accessible in the Commission's eLibrary system (*https://elibrary.ferc.gov/idmws/search/fercgensearch.asp*) by querying the docket number.

Any person desiring to intervene or protest in any of the above proceedings must file in accordance with Rules 211 and 214 of the Commission's Regulations (18 CFR 385.211 and 385.214) on or before 5:00 p.m. Eastern time on the specified comment date. Protests may be considered, but intervention is necessary to become a party to the proceeding.

eFiling is encouraged. More detailed information relating to filing requirements, interventions, protests, service, and qualifying facilities filings can be found at: *http://www.ferc.gov/docs-filing/efiling/filing-req.pdf.* For other information, call (866) 208–3676 (toll free). For TTY, call (202) 502–8659.

Dated: October 04, 2021.

**Debbie-Anne A. Reese,**

*Deputy Secretary.*

[FR Doc. 2021–22022 Filed 10–7–21; 8:45 am]

**BILLING CODE 6717–01–P**

## DEPARTMENT OF ENERGY

### Federal Energy Regulatory Commission

### Combined Notice of Filings #1

Take notice that the Commission received the following electric rate filings:

*Docket Numbers:* ER17–801–013.
*Applicants:* Constellation Power Source Generation, LLC.
*Description:* Compliance filing: Informational Filing Pursuant to Schedule 2 of the PJM OATT to be effective N/A.
*Filed Date:* 10/1/21.
*Accession Number:* 20211001–5182.
*Comment Date:* 5 p.m. ET 10/22/21.

*Docket Numbers:* ER17–803–005.
*Applicants:* Handsome Lake Energy, LLC.
*Description:* Compliance filing: Informational Filing Pursuant to Schedule 2 of the PJM OATT to be effective N/A.
*Filed Date:* 10/1/21.
*Accession Number:* 20211001–5180.
*Comment Date:* 5 p.m. ET 10/22/21.

*Docket Numbers:* ER21–45–002.
*Applicants:* Calvert Cliffs Nuclear Power Plant, LLC.
*Description:* Compliance filing: Informational Filing Pursuant to Schedule 2 of the PJM OATT to be effective N/A.
*Filed Date:* 10/1/21.
*Accession Number:* 20211001–5185.
*Comment Date:* 5 p.m. ET 10/22/21.

*Docket Numbers:* ER21–45–002.
*Applicants:* Calvert Cliffs Nuclear Power Plant, LLC.
*Description:* Compliance filing: Informational Filing Pursuant to Schedule 2 of the PJM OATT to be effective N/A.
*Filed Date:* 10/1/21.
*Accession Number:* 20211001–5185.
*Comment Date:* 5 p.m. ET 10/22/21.

*Docket Numbers:* ER21–500–001.
*Applicants:* Exelon Generation Company, LLC.
*Description:* Compliance filing: Informational Filing Pursuant to Schedule 2 of the PJM OATT to be effective N/A.
*Filed Date:* 10/1/21.
*Accession Number:* 20211001–5188.
*Comment Date:* 5 p.m. ET 10/22/21.

*Docket Numbers:* ER21–2330–000; ER21–2331–000; ER21–2333–000; ER21–2336–000.
*Applicants:* Tecolote Wind LLC, Red Cloud Wind LLC, Duran Mesa LLC, Clines Corners Wind Farm LLC.
*Description:* Supplement to July 1, 2021 Clines Corners Wind Farm LLC, et al. tariff filing.
*Filed Date:* 9/29/21.
*Accession Number:* 20210929–5183.
*Comment Date:* 5 p.m. ET 10/13/21.

*Docket Numbers:* ER21–2877–001.
*Applicants:* PJM Interconnection, L.L.C.
*Description:* Compliance filing: Compliance Filing Compliance Filing in ER21–2877 to be effective 9/2/2021.
*Filed Date:* 10/4/21.
*Accession Number:* 20211004–5026.
*Comment Date:* 5 p.m. ET 10/25/21.

*Docket Numbers:* ER22–26–000.
*Applicants:* PJM Interconnection, L.L.C.
*Description:* § 205(d) Rate Filing: Revisions to Administrative Cost Recovery Charges to be effective 12/2/2021.
*Filed Date:* 10/1/21.
*Accession Number:* 20211001–5184.
*Comment Date:* 5 p.m. ET 10/22/21.

*Docket Numbers:* ER22–27–000.
*Applicants:* Deseret Generation & Transmission Co-operative, Inc.
*Description:* § 205(d) Rate Filing: 2022 Rate Change Filing to be effective 1/1/2022.
*Filed Date:* 10/4/21.
*Accession Number:* 20211004–5003.
*Comment Date:* 5 p.m. ET 10/25/21.

*Docket Numbers:* ER22–28–000.
*Applicants:* Midcontinent Independent System Operator, Inc., Otter Tail Power Company.
*Description:* § 205(d) Rate Filing: Midcontinent Independent System Operator, Inc. submits tariff filing per 35.13(a)(2)(iii: 2021–10–04_SA 3713 WAPA–OTP FCA (Devils Lake) to be effective 9/30/2021.
*Filed Date:* 10/4/21.
*Accession Number:* 20211004–5018.
*Comment Date:* 5 p.m. ET 10/25/21.

*Docket Numbers:* ER22–29–000.
*Applicants:* Midcontinent Independent System Operator, Inc., Union Electric Company.
*Description:* § 205(d) Rate Filing: Midcontinent Independent System Operator, Inc. submits tariff filing per 35.13(a)(2)(iii: 2021–10–04_SA 3715 Ameren Missouri-Hannibal Construction Agreement to be effective 12/4/2021.
*Filed Date:* 10/4/21.
*Accession Number:* 20211004–5023.
*Comment Date:* 5 p.m. ET 10/25/21.

*Docket Numbers:* ER22–30–000.
*Applicants:* Alabama Power Company.
*Description:* Tariff Amendment: Urban Grid Solar Projects (Chase Solar) LGIA Termination Filing to be effective 10/4/2021.
*Filed Date:* 10/4/21.
*Accession Number:* 20211004–5025.
*Comment Date:* 5 p.m. ET 10/25/21.

*Docket Numbers:* ER22–31–000.
*Applicants:* Alabama Power Company.
*Description:* § 205(d) Rate Filing: Wadley Solar Amended and Restated LGIA Filing to be effective 9/20/2021.
*Filed Date:* 10/4/21.
*Accession Number:* 20211004–5030.

*Comment Date:* 5 p.m. ET 10/25/21.

*Docket Numbers:* ER22–32–000.

*Applicants:* Alabama Power Company.

*Description:* § 205(d) Rate Filing: SE Solar I (Kingston Solar) LGIA Filing to be effective 9/20/2021.

*Filed Date:* 10/4/21.

*Accession Number:* 20211004–5035.

*Comment Date:* 5 p.m. ET 10/25/21.

*Docket Numbers:* ER22–33–000.

*Applicants:* Alabama Power Company.

*Description:* § 205(d) Rate Filing: SE Solar I (Cedartown Solar) LGIA Filing to be effective 9/20/2021.

*Filed Date:* 10/4/21.

*Accession Number:* 20211004–5040.

*Comment Date:* 5 p.m. ET 10/25/21.

*Docket Numbers:* ER22–34–000.

*Applicants:* Alabama Power Company.

*Description:* § 205(d) Rate Filing: SE Solar II (Lumberton Solar) LGIA Filing to be effective 9/20/2021.

*Filed Date:* 10/4/21.

*Accession Number:* 20211004–5041.

*Comment Date:* 5 p.m. ET 10/25/21.

*Docket Numbers:* ER22–35–000.

*Applicants:* Alabama Power Company.

*Description:* § 205(d) Rate Filing: SE Solar II (Fayette Solar) LGIA Filing to be effective 9/20/2021.

*Filed Date:* 10/4/21.

*Accession Number:* 20211004–5042.

*Comment Date:* 5 p.m. ET 10/25/21.

*Docket Numbers:* ER22–36–000.

*Applicants:* Alabama Power Company.

*Description:* § 205(d) Rate Filing: SE Solar I (Berry Solar) LGIA Filing to be effective 9/20/2021.

*Filed Date:* 10/4/21.

*Accession Number:* 20211004–5043.

*Comment Date:* 5 p.m. ET 10/25/21.

*Docket Numbers:* ER22–37–000.

*Applicants:* IR Energy Management LLC.

*Description:* § 205(d) Rate Filing: Revised Market-Based Rate Tariff Filing to be effective 12/4/2021.

*Filed Date:* 10/4/21.

*Accession Number:* 20211004–5046.

*Comment Date:* 5 p.m. ET 10/25/21.

*Docket Numbers:* ER22–38–000.

*Applicants:* Duke Energy Carolinas, LLC.

*Description:* § 205(d) Rate Filing: NCMPA1 RS No. 318 Amendment (2022 Confirmation) to be effective 1/1/2022.

*Filed Date:* 10/4/21.

*Accession Number:* 20211004–5049.

*Comment Date:* 5 p.m. ET 10/25/21.

*Docket Numbers:* ER22–39–000.

*Applicants:* PJM Interconnection, L.L.C.

*Description:* § 205(d) Rate Filing: Original IISA, Service Agreement No. 6184; Queue No. AE2–148 to be effective 9/2/2021.

*Filed Date:* 10/4/21.

*Accession Number:* 20211004–5052.

*Comment Date:* 5 p.m. ET 10/25/21.

*Docket Numbers:* ER22–40–000.

*Applicants:* PSEG Power New York Inc.

*Description:* Baseline eTariff Filing: Application for Market Based Rate Authority to be effective 12/3/2021.

*Filed Date:* 10/4/21.

*Accession Number:* 20211004–5059.

*Comment Date:* 5 p.m. ET 10/25/21.

*Docket Numbers:* ER22–41–000.

*Applicants:* PJM Interconnection, L.L.C.

*Description:* § 205(d) Rate Filing: Amendment to ISA, Service Agreement No. 5071; Queue No. AB1–132 to be effective 4/16/2018.

*Filed Date:* 10/4/21.

*Accession Number:* 20211004–5060.

*Comment Date:* 5 p.m. ET 10/25/21.

Take notice that the Commission received the following PURPA 210(m)(3) filings:

*Docket Numbers:* QM22–1–000.

*Applicants:* Missouri River Energy Services.

*Description:* Application of Missouri River Energy Services to Terminate Its Mandatory Purchase Obligation under the Public Utility Regulatory Policies Act of 1978.

*Filed Date:* 9/30/21.

*Accession Number:* 20210930–5333.

*Comment Date:* 5 p.m. ET 10/28/21.

*Docket Numbers:* QM22–2–000.

*Applicants:* Missouri River Energy Services.

*Description:* Application of Missouri River Energy Services to Terminate Its Mandatory Purchase Obligation under the Public Utility Regulatory Policies Act of 1978.

*Filed Date:* 9/30/21.

*Accession Number:* 20210930–5342.

*Comment Date:* 5 p.m. ET 10/28/21.

The filings are accessible in the Commission's eLibrary system (*https://elibrary.ferc.gov/idmws/search/fercgensearch.asp*) by querying the docket number.

Any person desiring to intervene or protest in any of the above proceedings must file in accordance with Rules 211 and 214 of the Commission's Regulations (18 CFR 385.211 and 385.214) on or before 5:00 p.m. Eastern time on the specified comment date. Protests may be considered, but intervention is necessary to become a party to the proceeding.

eFiling is encouraged. More detailed information relating to filing requirements, interventions, protests, service, and qualifying facilities filings can be found at: *http://www.ferc.gov/docs-filing/efiling/filing-req.pdf.* For other information, call (866) 208–3676 (toll free). For TTY, call (202) 502–8659.

Dated: October 4, 2021.

**Debbie-Anne A. Reese,**

*Deputy Secretary.*

[FR Doc. 2021–22021 Filed 10–7–21; 8:45 am]

**BILLING CODE 6717–01–P**

## ENVIRONMENTAL PROTECTION AGENCY

**[EPA–HQ–OAR–2015–0072; FRL–8635–03–OAR]**

## Release of the Draft Policy Assessment for the Particulate Matter National Ambient Air Quality Standards

**AGENCY:** Environmental Protection Agency (EPA).

**ACTION:** Notice of availability.

**SUMMARY:** On or about October 8, 2021, the Environmental Protection Agency (EPA) will make available for public comment a draft document titled, *Policy Assessment for Reconsideration of the National Ambient Air Quality Standards for Particulate Matter, External Review Draft* (Draft PA). This draft document was prepared as a part of the current reconsideration of the 2020 final decision on the National Ambient Air Quality Standards (NAAQS) for Particulate Matter (PM). When final, the PA is intended to ''bridge the gap'' between the scientific and technical information assessed in the 2019 Integrated Science Assessment for Particulate Matter (2019 ISA) and Supplement to the 2019 Integrated Science Assessment for Particulate Matter (ISA Supplement) and the judgments required of the Administrator in determining whether to retain or revise the existing PM NAAQS.

**DATES:** Comments must be received on or before December 14, 2021.

**ADDRESSES:** You may send comments, identified by Docket ID No. EPA–HQ–OAR–2015–0072, by any of the following methods:

- *Federal eRulemaking Portal: https://www.regulations.gov/* (our preferred method). Follow the online instructions for submitting comments.
- *Mail:* U.S. Environmental Protection Agency, EPA Docket Center, Office of Air and Radiation Docket, Mail Code 28221T, 1200 Pennsylvania Avenue NW, Washington, DC 20460.
- *Hand Delivery or Courier (by scheduled appointment only):* EPA

Docket Center, WJC West Building, Room 3334, 1301 Constitution Avenue NW, Washington, DC 20004. The Docket Center's hours of operations are 8:30 a.m.–4:30 p.m., Monday–Friday (except Federal Holidays).

*Instructions:* All submissions received must include the Docket ID No. for this notice. Comments received may be posted without change to *https://www.regulations.gov,* including any personal information provided. For detailed instructions on sending comments, see the **SUPPLEMENTARY INFORMATION** section of this document. This document will be available on the EPA's website at *https://www.epa.gov/naaqs/particulate-matter-pm-air-quality-standards.* The document will be accessible under ''Policy Assessments'' from the current review.

**FOR FURTHER INFORMATION CONTACT:** Dr. Lars Perlmutt, Office of Air Quality Planning and Standards, (Mail Code C539–04), U.S. Environmental Protection Agency, Research Triangle Park, NC 27711; telephone number: 919–541–3037, fax number: 919–541–5315; or email: *perlmutt.lars@epa.gov.*

**SUPPLEMENTARY INFORMATION:**

## I. General Information

*Written Comments*

Submit your comments, identified by Docket ID No. EPA–HQ–OAR–2015–0072, at *https://www.regulations.gov* (our preferred method), or the other methods identified in the **ADDRESSES** section. Once submitted, comments cannot be edited or removed from the docket.The EPA may publish any comment received to its public docket. Do not submit to EPA's docket at *https://www.regulations.gov* any information you consider to be Confidential Business Information (CBI) or other information whose disclosure is restricted by statute. Multimedia submissions (audio, video, etc.) must be accompanied by a written comment. The written comment is considered the official comment and should include discussion of all points you wish to make. The EPA will generally not consider comments or comment contents located outside of the primary submission (*i.e.,* on the web, cloud, or other file sharing system). For additional submission methods, the full EPA public comment policy, information about CBI or multimedia submissions, and general guidance on making effective comments, please visit *https://www.epa.gov/dockets/commenting-epa-dockets.*

Due to public health concerns, the EPA Docket Center and Reading Room are open to the public by appointment only. Our Docket Center staff continues to provide remote customer service via email, phone, and webform. Hand deliveries or couriers will be received by scheduled appointment only. For further information and updates on EPA Docket Center services, please visit us online at *https://www.epa.gov/dockets.*

## II. Information About the Document

Two sections of the Clean Air Act (CAA or the Act) govern the establishment and revision of the NAAQS. Section 108 directs the Administrator to identify and list certain air pollutants and then issue ''air quality criteria'' for those pollutants. The air quality criteria are to ''accurately reflect the latest scientific knowledge useful in indicating the kind and extent of all identifiable effects on public health or welfare which may be expected from the presence of such pollutant in the ambient air . . .'' (CAA section 108(a)(2)). Under section 109 of the Act, the EPA is then to establish primary (health-based) and secondary (welfare-based) NAAQS for each pollutant for which the EPA has issued air quality criteria. Section 109(d)(1) of the Act requires periodic review and, if appropriate, revision of existing air quality criteria. Revised air quality criteria are to reflect advances in scientific knowledge on the effects of the pollutant on public health and welfare. Under the same provision, the EPA is also to periodically review and, if appropriate, revise the NAAQS, based on the revised air quality criteria.

The Act additionally requires appointment of an independent scientific review committee that is to periodically review the existing air quality criteria and NAAQS and to recommend any new standards and revisions of existing criteria and standards as may be appropriate (CAA section 109(d)(2)(A)–(B)). Since the early 1980s, the requirement for an independent scientific review committee has been fulfilled by the Clean Air Scientific Advisory Committee (CASAC).

In December 2020, the EPA announced its final decision to retain the primary and secondary $PM_{2.5}$ and $PM_{10}$ standards, without revision (85 FR 82684, December 18, 2020).[1] On June 10, 2021, the Agency announced its decision to reconsider the 2020 p.m. NAAQS final action.[2] In its announcement of the reconsideration of the PM NAAQS, the Agency explained that, in support of the reconsideration, it would develop an ISA Supplement and an updated PA. A draft of the ISA Supplement was released in September 2021, for public comment and review by the CASAC. The PA, when final, serves to ''bridge the gap'' between the scientific and technical information in the 2019 ISA and ISA Supplement and any air quality, exposure and risk analyses available in the reconsideration, and the judgments required of the Administrator in determining whether to retain or revise the existing PM NAAQS. The draft PA builds upon the information presented in the 2019 ISA, the ISA Supplement, and the 2020 PA. The draft PA document will be available on or about October 8, 2021, on the EPA's website at *https://www.epa.gov/naaqs/particulate-matter-pm-air-quality-standards.* The EPA is soliciting advice and recommendations from the CASAC by means of a review of this draft document at an upcoming public meeting of the CASAC. Information about this public meeting, including the dates and location, will be published as a separate notice in the **Federal Register**. Following the CASAC meeting, the EPA will consider comments received from the CASAC and the public in preparing revisions to this document.

The draft document briefly described above does not represent and should not be construed to represent any final EPA policy, viewpoint, or determination. The EPA will consider any public comments submitted in response to this notice when revising the document.

Dated: October 5, 2021.

**Panagiotis Tsirigotis,**

*Director, Office of Air Quality Planning and Standards.*

[FR Doc. 2021–22067 Filed 10–7–21; 8:45 am]

**BILLING CODE 6560–50–P**

[1] Other welfare effects of PM, such as ecological effects, are being considered in the separate, on-going review of the secondary NAAQS for oxides of nitrogen and oxides of sulfur. Accordingly, the public welfare protection provided by the secondary PM standards against ecological effects such as those related to deposition of nitrogen- and sulfur-containing compounds in vulnerable ecosystems is being considered in that separate review.

[2] The press release for this announcement is available at: *https://www.epa.gov/newsreleases/epa-reexamine-health-standards-harmful-soot-previous-administration-left-unchanged.*

## ENVIRONMENTAL PROTECTION AGENCY

**[ER–FRL–9058–7]**

## Environmental Impact Statements; Notice of Availability

*Responsible Agency:* Office of Federal Activities, General Information 202–564–5632 or *https://www.epa.gov/nepa.*

Weekly receipt of Environmental Impact Statements (EIS)
Filed September 27, 2021 10 a.m. EST Through October 4, 2021 10 a.m. EST
Pursuant to 40 CFR 1506.9.

*Notice:* Section 309(a) of the Clean Air Act requires that EPA make public its comments on EISs issued by other Federal agencies. EPA's comment letters on EISs are available at: *https://cdxnodengn.epa.gov/cdx-enepa-public/action/eis/search*.

EIS No. 20210150, Final, USACE, CA, Port of Long Beach Deep Draft Navigation Feasibility Study, Review Period Ends: 11/08/2021, Contact: Larry Smith 213–452–3846.

**Amended Notice**

EIS No. 20210108, Draft, NRC, SC, License Renewal of the Columbia Fuel Fabrication Facility in Richland County, South Carolina, Comment Period Ends: 11/19/2021, Contact: Diana Diaz-Toro 301–415–0930.

Revision to FR Notice Published 08/06/2021; NRC has reopened the comment period to end on 11/19/2021.

Dated: October 4, 2021.

**Cindy S. Barger,**

*Director, NEPA Compliance Division, Office of Federal Activities.*

[FR Doc. 2021–22015 Filed 10–7–21; 8:45 am]

**BILLING CODE 6560–50–P**

---

## ENVIRONMENTAL PROTECTION AGENCY

**[EPA–HQ–OPP–2021–0196; FRL–9071–01–OCSPP]**

## Pesticide Program Dialogue Committee; Notice of Public Meeting

**AGENCY:** Environmental Protection Agency (EPA).

**ACTION:** Notice.

**SUMMARY:** Pursuant to the Federal Advisory Committee Act, the Environmental Protection Agency's (EPA's) Office of Pesticide Programs is announcing a virtual public meeting of the Pesticide Program Dialogue Committee (PPDC) on October 27 and 28, 2021, with participation by webcast only. There will be no in-person gathering for this meeting.

**DATES:** *Virtual meeting:* The virtual meeting will be held on Wednesday, October 27, 2021, from 11:00 a.m. to approximately 5:00 p.m. (EDT), and Thursday, October 28, 2021, from 11 a.m. to approximately 5:00 p.m. (EDT). To make oral comments during the virtual meeting, please email Shannon Jewell by Tuesday, October 19, 2021.

**ADDRESSES:** *Virtual meeting:* Please visit *https://www.epa.gov/pesticide-advisory-committees-and-regulatory-partners/pesticide-program-dialogue-committee-ppdc* to find a link to register for the meeting.

**FOR FURTHER INFORMATION CONTACT:** Shannon Jewell, Office of Pesticide Programs, Environmental Protection Agency, 1200 Pennsylvania Ave. NW (7501P), Washington, DC 20460; telephone number: (571) 289–9911; email address: *jewell.shannon@epa.gov*.

**SUPPLEMENTARY INFORMATION:**

### I. General Information

*A. Does this action apply to me?*

You may be potentially affected by this action if you work in in agricultural settings or if you are concerned about implementation of the Federal Insecticide, Fungicide, and Rodenticide Act (FIFRA) (7 U.S.C. 136 *et seq.*); the Federal Food, Drug, and Cosmetic Act (FFDCA) (21 U.S.C. 301 *et seq.*); the Pesticide Registration Improvement Act (PRIA) (which amends FIFRA section 33); and the Endangered Species Act (ESA) (16 U.S.C. 1531 *et seq.*). Potentially affected entities may include but are not limited to: Agricultural workers and farmers; pesticide industry and trade associations; environmental, consumer, and farm worker groups; pesticide users and growers; animal rights groups; pest consultants; state, local, and tribal governments; academia; public health organizations; and the public. If you have questions regarding the applicability of this action to a particular entity, consult the person listed under **FOR FURTHER INFORMATION CONTACT**.

*B. How can I get copies of this document and other related information?*

The docket for this action, identified by docket identification (ID) number EPA–HQ–OPP–2021–0196, is available online at *http://www.regulations.gov*.

Due to the public health concerns related to COVID–19, the EPA Docket Center (EPA/DC) and Reading Room is closed to visitors with limited exceptions. The staff continues to provide remote customer service via email, phone, and webform. For the latest status information on EPA/DC services and docket access, visit *https://www.epa.gov/dockets*.

Once the EPA/DC is reopened to the public, the docket will also be available in-person at the Office of Pesticide Programs Regulatory Public Docket (OPP Docket) in the EPA/DC, West William Jefferson Clinton Bldg., Rm. 3334, 1301 Constitution Ave. NW, Washington, DC 20460–0001. The Public Reading Room is open from 8:30 a.m. to 4:30 p.m., Monday through Friday, excluding legal holidays. The telephone number for the Public Reading Room is (202) 566–1744, and the telephone number for the OPP Docket is (703) 305–5805.

For further information on EPA/DC services, docket contact information and the current status of the EPA/DC and Reading Room, please visit *https://www.epa.gov/dockets*.

### II. Background

The PPDC is a federal advisory committee chartered under the Federal Advisory Committee Act (FACA), Public Law 92–463. EPA established the PPDC in September 1995 to provide policy advice, information and recommendations to the EPA Administrator through the Director of the Office of Pesticide Programs, Office of Chemical Safety and Pollution Prevention. The PPDC provides a public forum to discuss a wide variety of pesticide regulatory developments and reform initiatives, evolving public policy and program implementation issues associated with evaluating and reducing risks from the use of pesticides. The EPA will consider candidates from the following sectors: Environmental/public interest and animal rights groups; farm worker organizations; pesticide industry and trade associations; pesticide user, grower, and commodity groups; federal and state/local/tribal governments; the general public; academia; and public health organizations.

The PPDC usually meets face-to-face twice a year, generally in the spring and the fall. Additionally, members may be asked to serve on work groups to develop recommendations to address specific policy issues. The average workload for members is approximately 4 to 6 hours per month. PPDC members may receive travel and per diem allowances where appropriate and according to applicable federal travel regulations.

### III. How do I participate in the virtual public meeting?

A. *Virtual meeting.* The virtual meeting will be conducted via webcast. Please visit *https://www.epa.gov/pesticide-advisory-committees-and-regulatory-partners/pesticide-program-dialogue-committee-ppdc* to find a link to register for the meeting.

B. *Oral comments.* Requests to make brief oral comments to the PPDC during the virtual meeting should be submitted to the Designated Federal Officer, listed under **FOR FURTHER INFORMATION**

**CONTACT** on or before noon on the date set in the **DATES** section.

*Authority:* 5 U.S.C. Appendix 2 *et seq.* and 7 U.S.C. 136 *et seq.*

Dated: September 30, 2021.

**Edward Messina,**

*Director, Office of Pesticide Programs.*

[FR Doc. 2021–22056 Filed 10–7–21; 8:45 am]

**BILLING CODE 6560–50–P**

## FEDERAL COMMUNICATIONS COMMISSION

**[GN Docket No. 17–208; FR ID 52202]**

### Meeting of the Communications Equity and Diversity Council

**AGENCY:** Federal Communications Commission.

**ACTION:** Notice.

**SUMMARY:** In accordance with the Federal Advisory Committee Act, this notice announces the first meeting of the Federal Communications Commission's (Commission) re-chartered Communications Equity and Diversity Council (CEDC). The charter for the CEDC has been renewed for a two-year period beginning June 29, 2021.

**DATES:** Wednesday, November 3, from 10:00 a.m. to 1:30 p.m.

**ADDRESSES:** The CEDC meeting will be available to the public for viewing via the internet at *http://www.fcc.gov/live.*

**FOR FURTHER INFORMATION CONTACT:** Jamila Bess Johnson, Designated Federal Officer (DFO) of the CEDC, (202) 418–2608, *Jamila-Bess.Johnson@fcc.gov;* Rashann Duvall, Co-Deputy DFO of the CEDC, (202) 418–1438, *Rashann.Duvall@fcc.gov;* or, Keyla Hernandez-Ulloa, Co-Deputy DFO of the CEDC, (202) 418–0965, *Keyla.Hernandez-Ulloa@fcc.gov.*

**SUPPLEMENTARY INFORMATION:** *Proposed Agenda:* The agenda for the meeting will include introducing members of the CEDC, including the Council Chair and Vice Chairs, and establishing working groups that will assist the CEDC in carrying out its work. This agenda may be modified at the discretion of the CEDC Chair and the DFO. As will be discussed at the meeting, the Council's mission is to make recommendations to the Commission on advancing equity in the provision of and access to digital communication services and products for all people of the United States, without discrimination on the basis of race, color, religion, national origin, sex, or disability. It shall provide recommendations to the Commission on how to empower people of color and others who have been historically underserved, including persons who live in rural areas, and persons otherwise adversely affected by persistent poverty or inequality, to access, leverage, and benefit from the wide range of opportunities made possible by technology, communication services and next-generation networks.

The CEDC meeting is accessible to the public on the internet via live feed from the FCC's web page at *www.fcc.gov/live.* Members of the public may submit any questions during the meeting to *livequestions@fcc.gov.* Oral statements at the meeting by parties or entities not represented on the CEDC will be permitted to the extent time permits and at the discretion of the CEDC Chair and the DFO.

Members of the public may submit comments to the CEDC using the FCC's Electronic Comment Filing System, ECFS, at *www.fcc.gov/ecfs.* Comments to the CEDC should be filed in GN Docket No. 17–208.

Open captioning will be provided for this event. Other reasonable accommodations for persons with disabilities are available upon request. Requests for such accommodations should be submitted via email to *fcc504@fcc.gov* or by calling the Consumer and Governmental Affairs Bureau at (202) 418–0530 (voice), (202) 418–0432 (TTY). Such requests should include a detailed description of the accommodation needed. In addition, please include a way for the Commission to contact the requester if more information is needed to fulfill the request. Please allow at least five days' notice; last minute requests will be accepted but may not be possible to accommodate.

Federal Communications Commission.

**Thomas Horan,**

*Chief of Staff, Media Bureau.*

[FR Doc. 2021–22023 Filed 10–7–21; 8:45 am]

**BILLING CODE 6712–01–P**

## FEDERAL COMMUNICATIONS COMMISSION

**[FR ID: 52487]**

### Privacy Act of 1974; Matching Program

**AGENCY:** Federal Communications Commission.

**ACTION:** Notice of a new matching program.

**SUMMARY:** In accordance with the Privacy Act of 1974, as amended (''Privacy Act''), this document announces a new computer matching program the Federal Communications Commission (''FCC'' or ''Commission'' or ''Agency'') and the Universal Service Administrative Company (USAC) will conduct with the Connecticut Department of Social Services (''Department'') (''Agency''). The purpose of this matching program is to verify the eligibility of applicants to and subscribers of Lifeline, and the Emergency Broadband Benefit Program, both of which are administered by USAC under the direction of the FCC. More information about these programs is provided in the **SUPPLEMENTARY INFORMATION** section below.

**DATES:** Written comments are due on or before November 8, 2021. This computer matching program will commence on November 8, 2021, and will conclude 18 months after the effective date.

**ADDRESSES:** Send comments to Margaret Drake, FCC, 45 L Street NE, Washington, DC 20554, or to *Privacy@fcc.gov.*

**FOR FURTHER INFORMATION CONTACT:** Margaret Drake at 202–418–1707 or *Privacy@fcc.gov.*

**SUPPLEMENTARY INFORMATION:** The Lifeline program provides support for discounted broadband and voice services to low-income consumers. Lifeline is administered by the Universal Service Administrative Company (USAC) under FCC direction. Consumers qualify for Lifeline through proof of income or participation in a qualifying program, such as Medicaid, the Supplemental Nutritional Assistance Program (SNAP), Federal Public Housing Assistance, Supplemental Security Income (SSI), Veterans and Survivors Pension Benefit, or various Tribal-specific Federal assistance programs.

The Emergency Broadband Benefit Program (EBBP) was established by Congress in the Consolidated Appropriations Act of 2021, Public Law 116–260, 134 Stat. 1182. EBBP is a program that helps low-income Americans obtain discounted broadband service and one-time co-pay for a connected device (laptop, desktop computer or tablet). This program was created specifically to assist American families' access to broadband, which has proven to be essential for work, school, and healthcare during the public health emergency that exists as a result of COVID–19. A household may qualify for the EBBP benefit under various criteria, including an individual qualifying for the FCC's Lifeline program.

In a Report and Order adopted on March 31, 2016 (81 FR 33026, May 24, 2016) (*2016 Lifeline Modernization Order*), the Commission ordered USAC

to create a National Lifeline Eligibility Verifier (''National Verifier''), including the National Lifeline Eligibility Database (LED), that would match data about Lifeline applicants and subscribers with other data sources to verify the eligibility of an applicant or subscriber. The Commission found that the National Verifier would reduce compliance costs for Lifeline service providers, improve service for Lifeline subscribers, and reduce waste, fraud, and abuse in the program.

The Consolidated Appropriations Act of 2021 directs the FCC to leverage the National Verifier to verify applicants' eligibility for EBBP. The purpose of this matching program is to verify the eligibility of Lifeline and EBBP applicants and subscribers by determining whether they receive Supplemental Nutrition Assistance Program (SNAP) benefits administered by the Connecticut Department of Social Services.

**Participating Agencies**

Connecticut Department of Social Services.

**Authority for Conducting the Matching Program**

The authority for the FCC's EBBP is Consolidated Appropriations Act of 2021, Public Law 116–260, 134 Stat. 1182; 47 CFR part 54. The authority for the FCC's Lifeline program is 47 U.S.C. 254; 47 CFR 54.400 through 54.423; Lifeline and Link Up Reform and Modernization, *et al.,* Third Report and Order, Further Report and Order, and Order on Reconsideration, 31 FCC Rcd 3962, 4006–21, paras. 126–66 (2016) (*2016 Lifeline Modernization Order*).

**Purpose(s)**

In the 2016 Lifeline Modernization Order, the FCC required USAC to develop and operate the National Verifier to improve efficiency and reduce waste, fraud, and abuse in the Lifeline program. The stated purpose of the National Verifier is ''to increase the integrity and improve the performance of the Lifeline program for the benefit of a variety of Lifeline participants, including Lifeline providers, subscribers, states, community-based organizations, USAC, and the Commission.'' 31 FCC Rcd 3962, 4006, para. 126. To help determine whether Lifeline applicants and subscribers are eligible for Lifeline benefits, the Order contemplates that the USAC-operated LED will communicate with information systems and databases operated by other Federal and State agencies. Id. at 4011–2, paras. 135–7. The Consolidated Appropriations Act of 2021 directs the FCC to leverage the National Verifier to verify applicants' eligibility for EBBP.

The purpose of this modified matching agreement is to verify the eligibility of applicants and subscribers to Lifeline, as well as to EBBP and other Federal programs that use qualification for Lifeline as an eligibility criterion. This new agreement will permit eligibility verification for the Lifeline program by checking an applicant's/subscriber's participation in SNAP. Under FCC rules, consumers receiving these benefits qualify for Lifeline discounts and also for EBBP benefits.

**Categories of Individuals**

The categories of individuals whose information is involved in the matching program include, but are not limited to, those individuals who have applied for Lifeline and/or EBBP benefits; are currently receiving Lifeline and/or EBBP benefits; are individuals who enable another individual in their household to qualify for Lifeline and/or EBBP benefits; are minors whose status qualifies a parent or guardian for Lifeline and/or EBBP benefits; or are individuals who have received Lifeline and/or EBBP benefits.

**Categories of Records**

The categories of records involved in the matching program include, but are not limited to, the last four digits of the applicant's Social Security Number, date of birth, first name, and last name. The National Verifier will transfer these data elements to the Connecticut Department of Social Services, which will respond either ''yes'' or ''no'' that the individual is enrolled in a qualifying assistance program: SNAP administered by Connecticut Department of Social Services.

**System(s) of Records**

The records shared as part of this matching program reside in the Lifeline system of records, FCC/WCB–1, Lifeline, which was published in the **Federal Register** at 86 FR 11526 (Feb. 25, 2021).

The records shared as part of this matching program reside in the EBBP system of records, FCC/WCB–3, Emergency Broadband Benefit Program, which was published in the **Federal Register** at 86 FR 11523 (Feb. 25, 2021).

Federal Communications Commission.

**Marlene Dortch,**

*Secretary.*

[FR Doc. 2021–22101 Filed 10–7–21; 8:45 am]

BILLING CODE 6712–01–P

## FEDERAL COMMUNICATIONS COMMISSION

[FR ID: 52488]

## Privacy Act of 1974; Matching Program

**AGENCY:** Federal Communications Commission.

**ACTION:** Notice of a new matching program.

**SUMMARY:** In accordance with the Privacy Act of 1974, as amended (''Privacy Act''), this document announces the establishment of a computer matching program the Federal Communications Commission (''FCC'' or ''Commission'' or ''Agency'') and the Universal Service Administrative Company (USAC) will conduct with the North Carolina Department of Health and Human Services (Department). The purpose of this matching program is to verify the eligibility of applicants to and subscribers of the Emergency Broadband Benefit Program, which is administered by USAC under the direction of the FCC, or other federal programs that use qualification for the FCC's Lifeline Program as an eligibility criterion. More information about this program is provided in the **SUPPLEMENTARY INFORMATION** section below.

**DATES:** Written comments are due on or before November 8, 2021. This computer matching program will commence on November 8, 2021, and will conclude 18 months after becoming effective.

**ADDRESSES:** Send comments to Margaret Drake, FCC, 45 L Street NE, Washington, DC 20554, or to *Privacy@fcc.gov.*

**FOR FURTHER INFORMATION CONTACT:** Margaret Drake at 202–417–1707 or *Privacy@fcc.gov.*

**SUPPLEMENTARY INFORMATION:** The Emergency Broadband Benefit Program (EBBP) was established by Congress in the Consolidated Appropriations Act of 2021, Public Law 116–260, 134 Stat. 1182. EBBP is a program that helps low-income Americans obtain discounted broadband service and one-time co-pay for a connected device (laptop, desktop computer or tablet). This program was created specifically to assist American families' access to broadband, which has proven to be essential for work, school, and healthcare during the public health emergency that exists as a result of COVID–19. A household may qualify for the EBBP benefit under various criteria, including an individual qualifying for the FCC's Lifeline program.

In a Report and Order adopted on March 31, 2016 (81 FR 33026, May 24, 2016) (*2016 Lifeline Modernization*

*Order*), the Commission ordered USAC to create a National Lifeline Eligibility Verifier (''National Verifier''), including the National Lifeline Eligibility Database (LED), that would match data about Lifeline applicants and subscribers with other data sources to verify the eligibility of an applicant or subscriber. The Commission found that the National Verifier would reduce compliance costs for Lifeline service providers, improve service for Lifeline subscribers, and reduce waste, fraud, and abuse in the program. The Consolidated Appropriations Act of 2021 directs the FCC to leverage the National Verifier to verify applicants' eligibility for EBBP. The purpose of this matching program is to verify the eligibility of EBBP applicants and subscribers by determining whether they receive Supplemental Nutrition Assistance Program (SNAP) benefits administered by the North Carolina Department. Under FCC rules, consumers receiving these benefits qualify for Lifeline discounts and also for EBBP benefits.

**Participating Agencies**

North Carolina Department of Health and Human Services (Department).

**Authority for Conducting the Matching Program**

Consolidated Appropriations Act of 2021, Public Law 116–260, 134 Stat. 1182; 47 CFR part 54, subparts E, P; Lifeline and Link Up Reform and Modernization, *et al.,* Third Report and Order, Further Report and Order, and Order on Reconsideration, 31 FCC Rcd 3962, 4006–21, paras. 126–66 (2016) (*2016 Lifeline Modernization Order*).

**Purpose(s)**

In the 2016 Lifeline Modernization Order, the FCC required USAC to develop and operate the National Verifier to improve efficiency and reduce waste, fraud, and abuse in the Lifeline program. The stated purpose of the National Verifier is ''to increase the integrity and improve the performance of the Lifeline program for the benefit of a variety of Lifeline participants, including Lifeline providers, subscribers, states, community-based organizations, USAC, and the Commission.'' 31 FCC Rcd 3962, 4006, para. 126. To help determine whether Lifeline applicants and subscribers are eligible for Lifeline benefits, the Order contemplates that the USAC-operated LED will communicate with information systems and databases operated by other Federal and State agencies. Id. at 4011–2, paras. 135–7.

The Consolidated Appropriations Act of 2021 directs the FCC to leverage the National Verifier to verify applicants' eligibility for EBBP. The purpose of this matching program is to verify the eligibility of EBBP applicants and subscribers by determining whether they receive SNAP benefits administered by the North Carolina Department. Under FCC rules, consumers receiving these benefits qualify for Lifeline discounts and also for EBBP benefits.

**Categories of Individuals**

The categories of individuals whose information is involved in the matching program include, but are not limited to, those individuals who have applied for EBBP benefits; are currently receiving benefits; are individuals who enable another individual in their household to qualify for EBBP benefits; are minors whose status qualifies a parent or guardian for EBBP benefits; or are individuals who have received EBBP benefits.

**Categories of Records**

The categories of records involved in the matching program include, but are not limited to first and last name, date of birth and the last four digits of the applicant's Social Security Number. The National Verifier will transfer these data elements to the North Carolina Department, which will respond either ''yes'' or ''no'' that the individual is enrolled in an EBBP-qualifying assistance program: State of North Carolina's SNAP.

**System(s) of Records**

The USAC records shared as part of this matching program reside in the EBBP system of records, FCC/WCB–3, Emergency Broadband Benefit Program, which was published in the **Federal Register** at 86 FR 11523 (Feb. 25, 2021).

Federal Communications Commission.

**Marlene Dortch,**

*Secretary.*

[FR Doc. 2021–22100 Filed 10–7–21; 8:45 am]

**BILLING CODE 6712–01–P**

## FEDERAL MARITIME COMMISSION

### Sunshine Act Meetings

**TIME AND DATE:** October 13, 2021; 10:00 a.m.

**PLACE:** This meeting will be held by video-conference only.

**STATUS:** Part of this meeting will be open to the public and will be streamed live, accessible from *www.fmc.gov.* The rest of the meeting will be closed to the public.

**MATTERS TO BE CONSIDERED:**

**Portions Open to the Public:**

1. *National Shipper Advisory Committee Update*

**Portions Closed to the Public**

1. *Staff Briefing on Ongoing Enforcement Activities*
2. *Staff Briefing on Vessel-Operating Common Carrier Audit Program*

**CONTACT PERSON FOR MORE INFORMATION:** Rachel Dickon, Secretary, (202) 523–5725.

**Rachel Dickon,**

*Secretary.*

[FR Doc. 2021–22115 Filed 10–6–21; 11:15 am]

**BILLING CODE 6730–02–P**

## FEDERAL RESERVE SYSTEM

### Change in Bank Control Notices; Acquisitions of Shares of a Bank or Bank Holding Company

The notificants listed below have applied under the Change in Bank Control Act (Act) (12 U.S.C. 1817(j)) and 225.41 of the Board's Regulation Y (12 CFR 225.41) to acquire shares of a bank or bank holding company. The factors that are considered in acting on the applications are set forth in paragraph 7 of the Act (12 U.S.C. 1817(j)(7)).

The public portions of the applications listed below, as well as other related filings required by the Board, if any, are available for immediate inspection at the Federal Reserve Bank(s) indicated below and at the offices of the Board of Governors. This information may also be obtained on an expedited basis, upon request, by contacting the appropriate Federal Reserve Bank and from the Board's Freedom of Information Office at *https://www.federalreserve.gov/foia/request.htm.* Interested persons may express their views in writing on the standards enumerated in paragraph 7 of the Act.

Comments regarding each of these applications must be received at the Reserve Bank indicated or the offices of the Board of Governors, Ann E. Misback, Secretary of the Board, 20th Street and Constitution Avenue NW, Washington DC 20551–0001, not later than October 25, 2021.

*A. Federal Reserve Bank of Atlanta* (Erien O. Terry, Assistant Vice President) 1000 Peachtree Street NE, Atlanta, Georgia 30309. Comments can also be sent electronically to *Applications.Comments@atl.frb.org:*

1. *The Vanguard Group, Inc., Malvern, Pennsylvania; on behalf of itself, its subsidiaries and affiliates, including investment companies registered under the Investment Company Act of 1940, other pooled investment vehicles, and institutional accounts that are sponsored, managed, or advised by Vanguard;* to acquire additional voting shares of United Community Banks, Inc., Blairsville, Georgia, and thereby indirectly acquire voting shares of United Community Bank, of Greenville, South Carolina.

*B. Federal Reserve Bank of Dallas* (Karen Smith, Director, Applications) 2200 North Pearl Street, Dallas, Texas 75201–2272:

1. *The John H. Young 2020 Trust, Edward E. Hartline and Gus K. Eifler as co-trustees, all of Houston, Texas;* to acquire additional voting shares of Central Bancshares, Inc., and thereby indirectly acquire voting shares of Central Bank, both of Houston, Texas.

Board of Governors of the Federal Reserve System, October 5, 2021.

**Michele Taylor Fennell,**

*Deputy Associate Secretary of the Board.*

[FR Doc. 2021–22064 Filed 10–7–21; 8:45 am]

**BILLING CODE P**

## DEPARTMENT OF HEALTH AND HUMAN SERVICES

### Centers for Disease Control and Prevention

### Informational Meeting: The Importation of Infectious Biological Agents, Infectious Substances and Vectors; Public Webinar

**AGENCY:** Centers for Disease Control and Prevention (CDC), Department of Health and Human Services (HHS).

**ACTION:** Notice of public webinar.

**SUMMARY:** The HHS/CDC's Division of Select Agents and Toxins (DSAT) is hosting a public webinar to provide information about import permit regulations for infectious biological agents, infectious substances, and vectors. Besides the CDC, presenters will include representatives from the Department of Transportation, Animal and Plant Health Inspection Service, U.S. National Authority for Containment of Poliovirus, Customs and Border Protection, and the Department of Commerce, who will discuss key aspects involved in the importation of infectious biological agents, infectious substances, and vectors.

**DATES:** The webinar will be held December 2, 2021 from 11:00 a.m. to 4:00 p.m. (EST). Registration instructions are found on the HHS/CDC Import Permit Program website, *https://www.cdc.gov/cpr/ipp/index.htm.*

**ADDRESSES:** The webinar will be broadcast from the Centers for Disease Control and Prevention, 1600 Clifton Road NE, Atlanta, Georgia 30329.

**FOR FURTHER INFORMATION CONTACT:** Samuel S. Edwin, Ph.D., Director, DSAT, Center for Preparedness and Response, CDC, 1600 Clifton Road NE, MS H–21–7, Atlanta, Georgia 30329. Telephone: (404) 718–2000; email: *lrsat@cdc.gov.*

**SUPPLEMENTARY INFORMATION:** This webinar is an opportunity for all interested parties (*e.g.,* academic institutions; biomedical centers; commercial manufacturing facilities; federal, state, and local laboratories, including clinical and diagnostic laboratories; research facilities; exhibition facilities; and educational facilities) to obtain specific guidance and information regarding import permit regulations and the shipment of infectious biological materials. The webinar will provide information to those interested in applying for an import permit from federal agencies within the United States. Instructions for registration are found on the CDC Import Permit Program website, *https://www.cdc.gov/cpr/ipp/index.htm.*

Participants must register by November 26, 2021. This is a webinar-only event and there will be no on-site participation at CDC.

Dated: October 4, 2021.

**Sandra Cashman,**

*Executive Secretary, Centers for Disease Control and Prevention.*

[FR Doc. 2021–22044 Filed 10–7–21; 8:45 am]

**BILLING CODE 4163–18–P**

## DEPARTMENT OF HEALTH AND HUMAN SERVICES

### Administration for Children and Families

### Submission for OMB Review; Placement and Transfer of Unaccompanied Children Into ORR Care Provider Facilities (0970–0554)

**AGENCY:** Office of Refugee Resettlement, Administration for Children and Families, Department of Health and Human Services.

**ACTION:** Request for public comment.

**SUMMARY:** The Office of Refugee Resettlement (ORR), Administration for Children and Families (ACF), U.S. Department of Health and Human Services (HHS), is inviting public comments on revisions to an approved information collection. The request consists of several forms that allow the Unaccompanied Children (UC) Program to place UC referred to ORR by federal agencies into care provider facilities and to transfer UC within the ORR care provider network.

**DATES:** *Comments due within 30 days of publication.* OMB must make a decision about the collection of information between 30 and 60 days after publication of this document in the **Federal Register**. Therefore, a comment is best assured of having its full effect if OMB receives it within 30 days of publication.

**ADDRESSES:** Written comments and recommendations for the proposed information collection should be sent within 30 days of publication of this notice to *www.reginfo.gov/public/do/PRAMain.* Find this particular information collection by selecting ''Currently under 30-day Review—Open for Public Comments'' or by using the search function.

**SUPPLEMENTARY INFORMATION:**

*Description:* ORR received several comments on this information collection in response to the **Federal Register** Notice published on January 19, 2021, (86 FR 5196) and has provided responses to those comments in its final submission to OMB. UC Path is critical to program operations and it is important that rollout of the new system not be delayed. Therefore, the below description details what will be included in the initial launch of the UC Path case management system and revisions based on public comments will be made after initial launch. ORR plans to conduct a deliberative review of commenters' suggestions and concerns and submit a request for revisions to this information collection request in January 2022. The upcoming information collection request will also include revisions based on feedback from UC Path system users (*i.e.,* ORR grantee, contractor, and federal staff).

A. ORR plans to revise all 13 instruments currently approved under OMB #0970–0554, all of which will be incorporated into ORR's new case management system, UC Path. Five of the instruments contain revisions to the formatting, organization, or wording of field labels with no changes to the content. The remaining eight instruments contain changes in content. In addition, ORR plans to add four new instruments to this collection that will also be incorporated into UC Path. Finally, ORR plans to replace the term ''unaccompanied alien child (UAC)'' with ''unaccompanied child (UC)''

throughout the instruments in this collection.

1. *Placement Authorization (Form P–1):* This instrument is used by ORR to authorize a care provider to provide care and services to UC placed in their facility. Care providers sign the instrument to acknowledge certain responsibilities related to the care of the UC. ORR revised the formatting, but no changes were made to the content. The average burden minutes per response was increased from 1 to 5 minutes.

2. *Authorization for Medical, Dental, and Mental Health Care (Form P–2):* This instrument is used by ORR to authorize a care provider to provide medical, dental, and mental health care services to UC placed in their facility. Care providers sign the instrument to acknowledge certain responsibilities related to the care of the UC. ORR revised the formatting, but no changes were made to the content. The average burden minutes per response was increased from 1 to 5 minutes.

3. *Notice of Placement in a Restrictive Setting (Form P–4/4s):* This instrument is used by care providers to document and inform UC of the reason they have been placed in a restrictive setting. ORR revised the formatting, but no changes were made to the content.

4. *Long Term Foster Care Placement Memo (Form P–5):* This instrument is used by care providers to ensure placement in a foster home that meets the UC's needs and continuity of services. ORR revised the formatting and the order in which the fields appear. ORR added two new questions asking respondents to (1) describe any specials skills or training of the foster family or group home, and (2) provide any further available information and/or considerations about the time line for physical transfer of the minor.

5. *UC Referral (formerly titled Intakes Placement Checklist and Add New UC) (Form P–7):* This instrument is used by federal agencies to refer UC to ORR custody and by ORR Intakes staff to place UC in an ORR care provider facility. It also contains a checklist that is used by ORR Intakes staff to determine whether initial placement in a restrictive setting is appropriate for a UC. ORR combined two of its current instruments, *Intakes Placement Checklist* and *Add New UC,* into one instrument. The average burden minutes per response was increased from 15 to 60 minutes, plus an additional 30 minutes if the placement checklist must be completed. In addition, ORR made the following revisions:

○ Moved the ''Immigration Status at Referral'' field to the *UC Profile* instrument.

○ Created a new ''Parent/Legal Guardian Separation'' section. This section contains five fields, and replaces the single question on the current version of the *Add New UC* instrument.

○ Created a new ''MPP Information'' section to capture information about enrollment in the Migrant Protection Protocol (MPP) program. This section contains two fields.

○ Moved the field ''Related to Other UC(s)?'' to the *UC Profile* instrument.

○ Moved fields related to family groups to the *UC Profile* and *Family Group Entity* instruments.

○ Added the following fields to the ''Apprehension and Referral Information'' section: ''Referring Sector Name,'' ''POC Primary Email,'' ''POC Secondary Email,'' and ''Referring Sector Code.''

○ Moved fields in the ''Parent/Relative Information'' section to the *UC Profile* instrument.

○ Renamed the ''Notes'' field in the ''Referral Notes'' section to ''Apprehension/Journey Notes'' and added a new field, ''Referral Cancellation Reason.''

○ Renamed the ''ORR Placement Information'' section to ''Placement Request'' and added the following fields: ''Required Placement Request,'' ''Placement Requested Date/Time,'' ''Program/Facility,'' ''Not Accepted Reason,'' ''Placement Decision Date/Time,'' ''Placement Notes,'' and ''Override Stop Placement Reason.''

○ Added a new section titled ''Special Placement Request'' that contains the fields found in the ''Placement Determination'' section of the current version of the *Intakes Placement Checklist.*

○ Created a new ''Criminal Information'' section. This section contains nine fields, and replaces the two questions on criminal charges and acting as a footguide on the current version of the *Add New UC* instrument.

○ A new section titled ''Criminal Charges'' as added to capture more detailed information if the UC has any criminal charges, which contains nine fields.

○ A new ''Detention Facilities'' section as created to capture more detailed information if the UC was ever held in a detention facility. This section contains nine fields.

○ Added a new ''Documents'' section where documents related directly to the UC's referral may be uploaded.

○ Added a new ''Entry Team'' section in which read and/or write access can be granted to individuals who need access privileges to the record, but do not typically need such privileges for a referral record.

○ Revised the *Intakes Placement Checklist* as follows:

▪ Reorganized the checklist into distinct sections for staff secure and secure placement criteria.

▪ Removed ''UC will be turning 18 year of age in the next month'' as an escape risk criteria.

▪ Removed the ''Danger to Self'' section.

▪ Revised the lists of criminal offenses in both the staff secure and secure sections.

○ Added a new ''Initial Health Information'' section to capture more detailed information about the UC's health. This section contains 31 fields.

6. *Care Provider Checklist for Transfers to Influx Care Facilities (Form P–8):* This instrument is used by care providers to ensure that all criteria for transfer of a UC to an influx care facility have been met. ORR revised the formatting and reworded some field labels, but no changes were made to the content.

7. *Medical Checklist for Non-Influx Transfers (Form P–9A):* This instrument is used by care providers to ensure that UC are medically cleared for transfer within the ORR care provider network, excluding transfer to an influx care facility. ORR revised the formatting and reworded the questions. In addition, ORR removed the question asking if the child is free of all medical conditions requiring specialist care.

8. *Medical Checklist for Transfers to Influx Care Facilities (Form P–9B):* This instrument is used by care providers to ensure that UC are medically cleared for transfer to an influx care facility. ORR revised the formatting and instructions, reworded most questions, and clarified which questions are only applicable to influx care facilities located on Department of Defense sites. ORR also added four new questions that ask about sexually transmitted disease, injection drug use, allergies, and the completion of lab and diagnosis field in UC Path.

9. *Transfer Request (Form P–10A):* This instrument is used by care provider facilities, ORR contractor staff, and ORR federal staff to process recommendations and decisions for transfer of a UC within the ORR care provider network for non-influx transfers. ORR revised the formatting and reworded many of the section titles and fields. In addition, ORR made the following revisions to this instrument:

○ In the ''Transfer Request'' section, ORR removed the field ''Requested Date'' and added the following fields: ''Status,'' ''Transfer Type,'' ''High Priority,'' ''Transfer Cancellation Reason,'' ''Case Coordinator,'' and ''Legal Eligibility.''

○ Added the following fields to the ''Case Coordinator Recommendation'' section: ''Pending Information,'' ''FFS Authorized to Proceed,'' and ''Add to Waitlist?''

○ Moved fields related to the UC's attorney of record from the ''Reason for Transfer Request'' section to the ''Casefile Summaries'' section.

○ Added a new ''Transfer Designation'' section containing three fields.

○ Added a ''Remand for Further Information'' to the ''ORR Decision'' section.

○ Removed the ''Transfer Packet'' section.

○ Added the following fields to the ''COA–COV'' section: ''Specify UC Special Needs'' and ''Other Change Venue Cause.''

○ Added a new ''Entry Team'' section in which read and/or write access can be granted to individuals who need access privileges to the record, but do not typically need such privileges for a referral record.

○ Added a new ''Documents'' sections where documents related directly to the UC's transfer may be uploaded.

○ Added a new ''Program Referrals'' section in which care providers can search for programs that fit the UC's transfer criteria and make referrals.

10. *Influx Transfer Request (Form P–10B):* This instrument is used by care provider facilities and ORR federal staff to process recommendations and decisions for transfers to an influx care facility. This is a new instrument that ORR plans to add to this collection.

11. *Transfer Summary and Tracking (formerly titled Transfer Request and Tracking Form) (Form P–11):* This instrument is used by care providers to track the physical transfer of the UC and their belongings. ORR revised the formatting and reworded some of the fields. ORR also removed the field ''FINS Number'' and added the fields ''Gender'' and ''Gender Other.''

12. *Program Entity (formerly titled UC Portal Capacity Report) (Form P–12):* This instrument is used by care providers and ORR to track certain information related to care provider programs, such as location, contact information, bed capacity, state licensure, grant information, monitoring, and program census. ORR greatly expanded this instrument to track multiple types of information related to care provider programs. The average burden minutes per response was increased from 5 to 30 minutes. In addition to bed capacity, this instrument contains the following information:

○ An overview of the program that includes name, status, parent entity, type, address, region, and acceptable placement types;

○ Various program points of contact;

○ Stakeholder information (child advocate program, legal service provider, field office juvenile coordinator);

○ Information related to the program's state licensing agency and licensing status;

○ Information related to the program's Administration for Children and Families grant;

○ Fields tracking the reason and dates of stop placements, if applicable;

○ Information related to the program's ORR monitoring schedule;

○ Sections that list all events and incident reports created for the program (cleared as separate instruments in OMB #0970–0547);

○ Census information and the ability to initiate prescreening for transfers to influx care facilities (cleared as *Influx Transfer Manual and Prescreen Review* in this collection);

○ An area to add individuals to the program's team (*e.g.,* assigned Federal Field Specialist, Project Officer);

○ An area to upload documents related to the facility and its operations and/or compliance; and

○ An auto-populated capacity dashboard to track available beds.

13. *UC Profile (formerly titled Add New UC) (Form P–13):* This instrument is used by referring federal agencies and care providers to create a profile for a UC from which all information related to their case can be accessed. Previously, the purpose of this instrument was to (1) create an initial profile and (2) receive/process referrals. The function of receiving/processing referrals and the related fields from the *Add New UC* instrument were moved to the *UC Referral* instrument, as noted above in the description of changes for *UC Referral*. The function of creating an initial profile in the system and related fields containing basic UC information remain with this instrument. However, the purpose of this instrument has been expanded. It now acts as a hub where users can assess all records related to a UC's case. Most of the records accessible from the UC Profile are being cleared as separate instruments, either in this or another one of ORR's information collections. The sections being cleared under this instrument are as follows: Profile Information, Program Designation, Legal—Immigration, Legal—Administrative, System Information, Apprehended Relationships, Other Relationships, Adult Contact Relationships, Entity Team, and Documents. The average burden minutes per response was increased from 15 to 45 minutes.

14. *ORR Transfer Notice—Notice of Transfer to ICE Chief Counsel—Change of Address/Change of Venue (Form P–14):* This instrument is used by care providers to notify the Department of Homeland Security (DHS) of the transfer of a UC within the ORR care provider network so that DHS may file a Motion for Change of Venue and/or Change of Address with the Executive Office for Immigration Review to ensure the UC's immigration case is transferred to the local immigration court, if applicable. ORR revised the formatting, but no changes were made to the content.

15. *Family Group Entity (Form P–15)*: This instrument is used by the ORR Intakes Team to associate UCs who are members of the same family with each other. This is a new instrument that ORR plans to add to this collection.

16. *Influx Transfer Manifest (Form P–16):* This instrument is used by designated care provider staff and ORR staff to plan, track, and notify stakeholders of group transfers to an influx care facility. This is a new instrument that ORR plans to add to this collection.

17. *Influx Transfer Manual and Prescreen Review (Form P–17):* This instrument is used by designated care provider staff to evaluate each UC's eligibility to be transferred to an influx care facility. Care provider staff review and update information on daily during times of influx. This is a new instrument that ORR plans to add to this collection.

B. ORR plans to remove the term ''alien'' from the title of this information collection and revise it to read ''Placement and Transfer of Unaccompanied Children into ORR Care Provider Facilities.''

C. ORR intends to conduct a phased rollout of the UC Path system. Beginning fall 2021, ORR plans to roll the UC Path system out to a small group of care provider programs. ORR will gradually expand use of the system to other programs and expects all care provider programs will be using UC Path by spring 2022. To ensure continuity of operations, care provider programs will need the ability to continue using instruments in the UC Portal system while they are waiting to transition over to the UC Path system. Therefore, ORR proposes continued use of the following UC Portal (ORR's current case management system) instruments, concurrently with the UC Path versions of the same instruments, until all care provider programs are using UC Path.

1. Placement Authorization (Form P–1)
2. Authorization for Medical, Dental, and Mental Health Care (Form P–2)
3. Intakes Placement Checklist
4. Transfer Request (Form P–10A)
5. Transfer Summary and Tracking (formerly titled Transfer Request and Tracking Form) (Form P–11)
6. UC Portal Capacity Report (Form P–12)
7. Add New UC (Form P–13)
8. ORR Transfer Notification—Notice of Transfer to Immigration and Customs Enforcement's (ICE) Chief Counsel—Change of Address/Change of Venue (Form P–14)

*Respondents:* ORR grantee and contractor staff, other federal agencies.

ANNUAL BURDEN ESTIMATES

| Instrument | Annual number of respondents | Annual number of responses per respondent | Average burden *minutes* per response | Annual total burden *hours* |
|---|---|---|---|---|
| Placement Authorization (Form P–1) | 216 | 278 | 5 | 5,004 |
| Authorization for Medical, Dental, and Mental Health Care (Form P–2) | 216 | 278 | 5 | 5,004 |
| Notice of Placement in a Restrictive Setting (Form P–4/4s) | 15 | 34 | 20 | 170 |
| Long Term Foster Care Placement Memo (Form P–5) | 30 | 3 | 15 | 23 |
| UC Referral (Form P–7) | 16 | 3,250 | 60 | 52,000 |
| UC Referral—Intakes Placement Checklist (Form P–7) | 16 | 9 | 30 | 72 |
| Care Provider Checklist for Transfers to Influx Care Facilities (Form P–8) | 216 | 10 | 15 | 540 |
| Medical Checklist for Transfers (Form P–9A) | 216 | 27 | 5 | 486 |
| Medical Checklist for Influx Transfers (Form P–9B) | 216 | 63 | 10 | 2,268 |
| Transfer Request (Form P–10A)—Grantee Case Manager | 216 | 37 | 25 | 3,330 |
| Transfer Request (Form P–10A)—Contractor Case Coordinator | 250 | 37 | 20 | 3,083 |
| Influx Transfer Request (Form P–10B) | 216 | 63 | 25 | 5,670 |
| Transfer Summary and Tracking (Form P–11) | 216 | 37 | 10 | 1,332 |
| Program Entity (Form P–12) | 216 | 12 | 30 | 1,296 |
| UC Profile (Form P–13) | 216 | 241 | 45 | 39,042 |
| ORR Transfer Notification—ORR Notification to ICE Chief Counsel of Transfer of UC and Request to Change Address/Venue (Form P–14) | 216 | 37 | 10 | 1,332 |
| Family Group Entity (Form P–15) | 16 | 188 | 5 | 251 |
| Influx Transfer Manifest (Form P–16) | 3 | 12 | 20 | 12 |
| Influx Transfer Manual and Prescreen Criteria Review (Form P–17) | 216 | 43,333 | 30 | 4,679,964 |
| Estimated Annual Burden Hours Total | | | | 4,800,879 |

*Authority:* 6 U.S.C. 279; 8 U.S.C. 1232; *Flores* v. *Reno Settlement Agreement,* No. CV85–4544–RJK (C.D. Cal. 1996).

**Mary B. Jones,**

*ACF/OPRE Certifying Officer.*

[FR Doc. 2021–21999 Filed 10–7–21; 8:45 am]

**BILLING CODE 4184–45–P**

## DEPARTMENT OF HEALTH AND HUMAN SERVICES

### Food and Drug Administration

**[Docket No. FDA–2019–D–1262]**

### Surgical Staplers and Staples for Internal Use—Labeling Recommendations; Guidance for Industry and Food and Drug Administration Staff; Availability

**AGENCY:** Food and Drug Administration, HHS.

**ACTION:** Notice of availability.

**SUMMARY:** The Food and Drug Administration (FDA, we, or Agency) is announcing the availability of a final guidance entitled ''Surgical Staplers and Staples for Internal Use—Labeling Recommendations.'' FDA is issuing this guidance to provide labeling recommendations for surgical staplers and staples for internal use. These labeling recommendations are being issued because malfunctions and misuse associated with these devices have resulted in serious adverse events, including deaths.

**DATES:** The announcement of the guidance is published in the **Federal Register** on October 8, 2021.

**ADDRESSES:** You may submit either electronic or written comments on Agency guidances at any time as follows:

*Electronic Submissions*

Submit electronic comments in the following way:

- *Federal eRulemaking Portal: https://www.regulations.gov.* Follow the instructions for submitting comments. Comments submitted electronically, including attachments, to *https://www.regulations.gov* will be posted to the docket unchanged. Because your comment will be made public, you are solely responsible for ensuring that your comment does not include any confidential information that you or a third party may not wish to be posted, such as medical information, your or anyone else's Social Security number, or confidential business information, such as a manufacturing process. Please note that if you include your name, contact information, or other information that identifies you in the body of your comments, that information will be posted on *https://www.regulations.gov.*
- If you want to submit a comment with confidential information that you do not wish to be made available to the public, submit the comment as a written/paper submission and in the manner detailed (see ''Written/Paper Submissions'' and ''Instructions'').

*Written/Paper Submissions*

Submit written/paper submissions as follows:

- *Mail/Hand Delivery/Courier (for written/paper submissions):* Dockets Management Staff (HFA–305), Food and Drug Administration, 5630 Fishers Lane, Rm. 1061, Rockville, MD 20852.
- For written/paper comments submitted to the Dockets Management Staff, FDA will post your comment, as well as any attachments, except for information submitted, marked and identified, as confidential, if submitted as detailed in ''Instructions.''

*Instructions:* All submissions received must include the Docket No. FDA–2019–D–1262 for ''Surgical Staplers and Staples for Internal Use—Labeling Recommendations.'' Received comments will be placed in the docket and, except for those submitted as ''Confidential Submissions,'' publicly viewable at *https://www.regulations.gov* or at the Dockets Management Staff between 9 a.m. and 4 p.m., Monday through Friday, 240–402–7500.

• Confidential Submissions—To submit a comment with confidential information that you do not wish to be made publicly available, submit your comments only as a written/paper submission. You should submit two copies total. One copy will include the information you claim to be confidential with a heading or cover note that states ''THIS DOCUMENT CONTAINS CONFIDENTIAL INFORMATION.'' The Agency will review this copy, including the claimed confidential information, in its consideration of comments. The second copy, which will have the claimed confidential information redacted/blacked out, will be available for public viewing and posted on *https://www.regulations.gov.* Submit both copies to the Dockets Management Staff. If you do not wish your name and contact information to be made publicly available, you can provide this information on the cover sheet and not in the body of your comments and you must identify this information as ''confidential.'' Any information marked as ''confidential'' will not be disclosed except in accordance with 21 CFR 10.20 and other applicable disclosure law. For more information about FDA's posting of comments to public dockets, see 80 FR 56469, September 18, 2015, or access the information at: *https://www.govinfo.gov/content/pkg/FR-2015-09-18/pdf/2015-23389.pdf.*

*Docket:* For access to the docket to read background documents or the electronic and written/paper comments received, go to *https://www.regulations.gov* and insert the docket number, found in brackets in the heading of this document, into the ''Search'' box and follow the prompts and/or go to the Dockets Management Staff, 5630 Fishers Lane, Rm. 1061, Rockville, MD 20852, 240–402–7500.

You may submit comments on any guidance at any time (see 21 CFR 10.115(g)(5)).

An electronic copy of the guidance document is available for download from the internet. See the **SUPPLEMENTARY INFORMATION** section for information on electronic access to the guidance. Submit written requests for a single hard copy of the guidance document entitled ''Surgical Staplers and Staples for Internal Use—Labeling Recommendations'' to the Office of Policy, Guidance and Policy Development, Center for Devices and Radiological Health, Food and Drug Administration, 10903 New Hampshire Ave., Bldg. 66, Rm. 5431, Silver Spring, MD 20993–0002. Send one self-addressed adhesive label to assist that office in processing your request.

**FOR FURTHER INFORMATION CONTACT:** George Gibeily, Center for Devices and Radiological Health, Food and Drug Administration, 10903 New Hampshire Ave., Bldg. 66, Rm. 4660, Silver Spring, MD 20993–0002, 301–796–0276.

**SUPPLEMENTARY INFORMATION:**

## I. Background

FDA is announcing the availability of a guidance for industry and FDA staff entitled ''Surgical Staplers and Staples for Internal Use—Labeling Recommendations.'' Surgical staplers for internal use are specialized prescription devices used to deliver compatible staples to internal tissues during surgery for resection, transection, and creating anastomoses. Surgical staplers and staples for internal use may be indicated for use in a wide range of surgical applications, including but not limited to gastrointestinal, gynecologic, and thoracic surgery. FDA developed this guidance because we had become aware of a large number of adverse events associated with use of both surgical staplers and staples for internal use. Both device misuse and device malfunctions are root causes of these adverse events. FDA believes that these problems may be mitigated by providing specific information about the risks, limitations, and directions for use in the labeling for the surgical staplers and staples for internal use.

This guidance is intended to provide recommendations for information that should be included in the product labeling for surgical staplers and staples for internal use, including contraindications, warnings, directions for use, and technical characteristics and performance parameters. Elsewhere in this issue of the **Federal Register**, FDA is announcing the final reclassification of surgical staplers for internal use from class I to class II with special controls. Some of the labeling recommendations in this guidance are intended to provide additional recommendations in order to help manufacturers comply with the labeling requirements as part of the special controls for surgical staplers for internal use.

A notice of availability of the draft guidance appeared in the **Federal Register** of April 24, 2019 (84 FR 17174). FDA considered comments received and revised the guidance as appropriate in response to the comments, including revisions to the contraindications and warnings to avoid being overly prescriptive and not interfere with physicians' decision making under practice of medicine where appropriate. Revisions were also made to refine the directions for use and technical characteristics recommendations in response to feedback, as also described in the final reclassification of surgical staplers for internal use announced elsewhere in this issue of the **Federal Register**. FDA also added the relevant special controls language in order to make it clear what are requirements under the special controls and what are further clarifying recommendations.

This guidance is being issued consistent with FDA's good guidance practices regulation (21 CFR 10.115). The guidance represents the current thinking of FDA on ''Surgical Staplers and Staples for Internal Use—Labeling Recommendations.'' It does not establish any rights for any person and is not binding on FDA or the public. You can use an alternative approach if it satisfies the requirements of the applicable statutes and regulations.

## II. Electronic Access

Persons interested in obtaining a copy of the guidance may do so by downloading an electronic copy from the internet. A search capability for all Center for Devices and Radiological Health guidance documents is available at *https://www.fda.gov/medical-devices/device-advice-comprehensive-regulatory-assistance/guidance-documents-medical-devices-and-radiation-emitting-products.* This guidance document is also available at *https://www.regulations.gov.* Persons unable to download an electronic copy of ''Surgical Staplers and Staples for Internal Use—Labeling Recommendations'' may send an email request to *CDRH-Guidance@fda.hhs.gov* to receive an electronic copy of the document. Please use the document number 18013 and complete title to identify the guidance you are requesting.

## III. Paperwork Reduction Act of 1995

While this guidance contains no collection of information, it does refer to previously approved collections of information. Therefore, clearance by the Office of Management and Budget (OMB) under the Paperwork Reduction

Act of 1995 (44 U.S.C. 3501–3521) is not required for this guidance. The previously approved collections of information are subject to review by OMB under the PRA. The collections of information in the following FDA regulations have been approved by OMB as listed in the following table:

| 21 CFR part | Topic | OMB control No. |
|---|---|---|
| 807, subpart E | Premarket Notification | 0910–0120 |
| 800, 801, and 809 | Medical Device Labeling Regulations | 0910–0485 |

Dated: October 4, 2021.

**Lauren K. Roth,**

*Associate Commissioner for Policy.*

[FR Doc. 2021–22042 Filed 10–7–21; 8:45 am]

**BILLING CODE 4164–01–P**

## DEPARTMENT OF HEALTH AND HUMAN SERVICES

### Food and Drug Administration

**[Docket No. FDA–2014–N–1048]**

### Agency Information Collection Activities; Submission for Office of Management and Budget Review; Comment Request; Medical Device Labeling Regulations

**AGENCY:** Food and Drug Administration, HHS.

**ACTION:** Notice.

**SUMMARY:** The Food and Drug Administration (FDA, Agency, or we) is announcing that a proposed collection of information has been submitted to the Office of Management and Budget (OMB) for review and clearance under the Paperwork Reduction Act of 1995.

**DATES:** Submit written comments (including recommendations) on the collection of information by November 8, 2021.

**ADDRESSES:** To ensure that comments on the information collection are received, OMB recommends that written comments be submitted to *https://www.reginfo.gov/public/do/PRAMain.* Find this particular information collection by selecting ''Currently under Review—Open for Public Comments'' or by using the search function. The OMB control number for this information collection is 0910–0485. Also include the FDA docket number found in brackets in the heading of this document.

**FOR FURTHER INFORMATION CONTACT:** Rachel Showalter, Office of Operations, Food and Drug Administration, Three White Flint North, 10A–12M, 11601 Landsdown St., North Bethesda, MD 20852, 240–994–7399, *PRAStaff@fda.hhs.gov.*

**SUPPLEMENTARY INFORMATION:** In compliance with 44 U.S.C. 3507, FDA has submitted the following proposed collection of information to OMB for review and clearance.

### Medical Device Labeling Regulations

*OMB Control No. 0910–0485—Revision*

This information collection supports implementation of medical device labeling requirements governed by section 502 of the Federal Food, Drug, and Cosmetic Act (FD&C Act) (21 U.S.C. 352), codified in Agency regulations, and discussed in associated Agency guidance. Medical device labeling requirements, among other things, provide for the label or labeling content of a medical device so that it is not misbranded and subject to regulatory action. Certain provisions under section 502 of the FD&C Act require that manufacturers, importers, and distributors of medical devices disclose information about themselves or the devices on the labels or labeling for the devices. Section 502 provides, in part, that a device shall be misbranded if, among other things, its label or labeling fails to bear certain required information concerning the device, is false or misleading in any particular way, or fails to contain adequate directions for use. Medical device labeling regulations in parts 800, 801, 809, and associated regulations in parts 660 and 1040 (21 CFR parts 660, 800, 801, 809, and 1040), prescribe the disclosure of specific information by manufacturers, importers, and distributors of medical devices about themselves and/or the devices, on the label or labeling for the devices, to health professionals and consumers.

In conjunction with provisions in part 800, part 801, subpart A sets forth general labeling provisions applicable to all medical devices, including content and format requirements pertaining to intended uses, adequate directions for use, misleading statements, and the prominence of required labeling. Provisions found in part 801, subpart B pertaining to labeling requirements for Unique Device Identification are currently approved under OMB control number 0910–0720 and not covered in this information collection request. Information collection associated with labeling requirements for Over-the-Counter (OTC) Devices are found in part 801, subpart C, and cover principal display panel; statement of identity; declaration of net quantity of contents; and certain warning statement elements. Information collection associated with exemptions from adequate directions for use and other exemptions are found in part 801, subparts D and E, respectively. Information collection associated with special labeling requirements applicable to specific devices are found in part 801, subpart H. We also include information collection associated with labeling for in vitro diagnostic products for human use, as set forth in part 809, subpart B. In addition to the labeling requirements in part 801 and the certification and identification requirements of 21 CFR 1010.2 and 1010.3, sunlamp products and ultraviolet lamps are subject to specific labeling requirements as set forth in part 1040.

The information collection also includes provisions associated with stand-alone symbols (not accompanied by explanatory text adjacent to the symbol), when accompanied by a symbols glossary, as set forth in part 660, additional standards for diagnostic substances for laboratory standards for biological products, subparts A, C, D, E, and F. The requirements are also found in the general medical device labeling regulations part 801, subpart A, and part 809, subpart B.

The information collection also helps to implement section 502(b) of the FD&C Act which requires that, for packaged devices, labeling must bear the name and place of business of the manufacturer, packer, or distributor; and an accurate statement of the quantity of the contents. Section 502(f) of the FD&C Act requires also that the labeling for a device must contain adequate directions for use unless FDA grants an exemption. Section 502(u) requires reprocessed single-use devices (SUDs) to bear prominently and conspicuously the name of the manufacturer, a generally recognized abbreviation of such name, or a unique and generally recognized symbol identifying the manufacturer. Under this provision, if the original SUD or an attachment to it prominently and conspicuously bears the name of the manufacturer, then the reprocessor of the SUD is required to identify itself by

name, abbreviation, or symbol in a prominent and conspicuous manner on the device or attachment to the device. If the original SUD does not prominently and conspicuously bear the name of the manufacturer, the manufacturer who reprocesses the SUD for reuse may identify itself using a detachable label that is intended to be affixed to the patient record. As required by the Medical Device User Fee Stabilization Act of 2005 (MDUFSA), FDA issued the guidance document, ''Compliance with Section 301 of the Medical Device User Fee and Modernization Act of 2002, as amended—Prominent and Conspicuous Mark of Manufacturers on Single-Use Devices'' (May 2006), to assist respondents with these requirements. The guidance document was issued consistent with our Good Guidance Practice regulations in 21 CFR 10.115, which provide for public comment at any time. We maintain a searchable guidance database on our website, and this guidance is available at *https://www.fda.gov/media/71187/download.* The guidance document is intended to identify circumstances in which the name or symbol of the original SUD manufacturer is not prominent and conspicuous, as used in section 502(u) of the FD&C Act.

In the **Federal Register** of July 13, 2021 (86 FR 36752), FDA published a 60-day notice requesting public comment on the proposed collection of information. No comments were received.

We estimate the burden of this collection of information as follows:

TABLE 1—ESTIMATED ANNUAL REPORTING BURDEN [1]

| 21 CFR citation | Number of respondents | Number of responses per respondent | Total annual responses | Average burden per response | Total hours |
|---|---|---|---|---|---|
| **Part 660, subparts A, C, D, E, and F: Antibody to Hepatitis B Surface Antigen; Blood Grouping Reagent; Reagent Red Blood Cells; Hepatitis B Surface Antigen; Anti-Human Globulin; Part 801 subpart A: General Labeling; Part 809, subpart B: Labeling** | | | | | |
| Symbols glossary—660.2; antibody to Hepatitis B surface antigen requirements, 660.28; blood grouping labeling, 660.35; reagent red blood cell labeling, 660.45, hepatitis B surface antigen labeling, 660.55; anti-human globulin labeling, 801.15; medical devices labeling and use of symbols; 809.10, labeling for in vitro diagnostic products | 3,000 | 1 | 3,000 | 1 | 3,000 |

[1] There are no capital costs or operating and maintenance costs associated with this collection of information.

Our figures are based on data from the FDA Unified Registration and Listing System and the OASIS shipment information. FDA regulations allow for the use of stand-alone graphical representations of information, or symbols, in the labeling for the medical devices and diagnostic substances for laboratory standards, if the symbol has been established in a Standards Development Organization developed standard, provided that such symbol is explained in a symbols glossary that is included in the labeling for the medical device and otherwise complies with section 502 (misbranding) of the FD&C Act. These labeling requirements are set forth in part 660, subparts A, C, D, E, and F, in the additional standards for diagnostic substances for laboratory standards for biological products, including: General requirements (§ 660.2), using antibody to Hepatitis B surface antigen (§ 660.28), blood grouping reagent (§ 660.35), reagent red blood cells (§ 660.45), Hepatitis B surface antigen (§ 660.45); and anti-human globulin (§ 660.55). The requirements are also found in the general medical device labeling regulations part 801, subpart A and in the in vitro diagnostic product labeling regulations part 809, subpart B.

TABLE 2—ESTIMATED ANNUAL RECORDKEEPING BURDEN [1] [2]

| 21 CFR citation | Number of recordkeepers | Number of records per recordkeeper | Total annual records | Average burden per recordkeeping | Total hours |
|---|---|---|---|---|---|
| **Part 801 subpart A: General Labeling Provisions; subpart E: Other Exemptions; subpart H: Special Requirements for Specific Devices** | | | | | |
| Processing, labeling, or repacking agreement; 801.150 | 7,500 | 887 | 6,652,500 | 0.5 (30 minutes) | 3,326,250 |
| Impact resistant lenses; invoices, shipping documents, and records of sale or distribution; 801.410(e) and (f). | 1,591 | 47,050 | 74,856,550 | 0.0008 (0.048 minutes) | 59,885 |
| Hearing aid records; 801.421 | 10,000 | 160 | 1,600,000 | 0.25 (15 minutes) | 400,000 |
| Menstrual tampons, sampling plan for measuring absorbency; 801.430(f). | 33 | 11 | 363 | 80 | 29,040 |
| Latex condoms; justification for the application of testing data to the variation of the tested product; 801.435(g). | 51 | 3.65 | 186 | 1 | 186 |
| Total | | | 83,109,599 | | 3,815,361 |

[1] There are no capital costs or operating and maintenance costs associated with this collection of information.
[2] Numbers have been rounded.

As set forth in § 801.150(a)(2), device manufacturers are required to retain a copy of the agreement containing the specifications for the processing, labeling, or repacking of the device for 2 years after the final shipment or delivery of the device. Section 801.150(a)(2) requires that copies of this agreement be made available for inspection at any reasonable hour upon request by any officer or employee of the Department of Health and Human Services (HHS). In § 801.410(e) copies of invoices, shipping documents, and records of sale or distribution of all impact resistant lenses, including finished eyeglasses and sunglasses, are required to be maintained for 3 years by the retailer and made available upon request by any officer or employee of FDA or by any other officer or employee

acting on behalf of the Secretary of HHS. Section 801.410(f) requires that the results of impact tests and description of the test method and apparatus be retained for a period of 3 years. Specific recordkeeping requirements applicable to hearing aid dispensers, manufacturers of menstrual tampons, and manufacturers of latex condoms are set forth in §§ 801.421(d), 801.430(f), and 801.435(g), respectively.

TABLE 3—ESTIMATED ANNUAL THIRD-PARTY DISCLOSURE BURDEN [1] [2]

| 21 CFR citation | Number of respondents | Number of disclosures per respondent | Total annual disclosures | Average burden per disclosure | Total hours |
|---|---|---|---|---|---|
| **Part 800; and Part 801, subparts A, C, D, and E: General Labeling; OTC Devices; Exemptions** | | | | | |
| Contact lens cleaning solution labeling; 800.10(a)(3) and 800.12(c) | 47 | 8 | 376 | 1 | 376 |
| Liquid ophthalmic preparation labeling; 800.10(b)(2) | 25 | 8 | 200 | 1 | 200 |
| Manufacturer, packer, or distributor information; 801.1 | 19,407 | 7 | 135,849 | 1 | 135,849 |
| Adequate directions for use; 801.5 | 8,526 | 6 | 51,156 | 22.35 (22 hours and 21 minutes). | 1,143,337 |
| Statement of identity; 801.61 | 8,526 | 6 | 51,156 | 1 | 51,156 |
| Declaration of net quantity of contents; 801.62 | 8,526 | 6 | 51,156 | 1 | 51,156 |
| Prescription device labeling; 801.109 | 9,681 | 6 | 58,086 | 17.77 (17 hours and 46.2 minutes). | 1,032,188 |
| Retail exemption for prescription devices; 801.110 | 30,000 | 667 | 20,010,000 | 0.25 (15 minutes) | 5,002,500 |
| Processing, labeling, or repacking; non-sterile devices; 801.150(e) | 453 | 34 | 15,402 | 4 | 61,608 |
| **Part 801, subpart H: Special Requirements for Specific Devices** | | | | | |
| Labeling of articles intended for lay use in the repairing and/or refitting of dentures; 801.405(b)(1). | 35 | 1 | 35 | 4 | 140 |
| Dentures; information regarding temporary and emergency use; 801.405(c). | 35 | 1 | 35 | 4 | 140 |
| Hearing aids professional and patient labeling; 801.420 | 136 | 12 | 1,632 | 80 | 130,560 |
| Hearing aids, availability of User Instructional Brochure; 801.421 | 10,000 | 5 | 50,000 | 0.17 (10 minutes) | 8,500 |
| User labeling for menstrual tampons; 801.430 | 16 | 8 | 128 | 2 | 256 |
| User labeling for latex condoms; 801.437 | 52 | 6 | 312 | 100 | 31,200 |
| **Part 809 (in vitro diagnostic products for human use) and Part 1040 (light-emitting products)** | | | | | |
| Format and content of labeling for IVDs; 809.10 | 1,700 | 6 | 10,200 | 80 | 816,000 |
| Advertising and promotional materials for ASRs; 809.30(d) | 300 | 25 | 7,500 | 1 | 7,500 |
| Labeling of sunlamp products—1040.20(d) | 30 | 1 | 30 | 10 | 300 |
| **FD&C Action Section 502(u)** | | | | | |
| Establishments listing <10 SUDs | 161 | 2 | 322 | 0.1 (6 minutes) | 32 |
| Establishments listing >10 SUDs | 14 | 45 | 630 | 0.1 (6 minutes) | 63 |
| **Part 660, subparts A, C, D, E, and F: Antibody to Hepatitis B Surface Antigen; Blood Grouping Reagent; Reagent Red Blood Cells; Hepatitis B Surface Antigen; Anti-Human Globulin; Part 801 subpart A: General Labeling Provisions; Part 809, subpart B: Labeling** | | | | | |
| Symbols glossary—660.2; antibody to Hepatitis B surface antigen requirements, 660.28; blood grouping labeling, 660.35; reagent red blood cell labeling, 660.45, hepatitis B surface antigen labeling, 660.55; anti-human globulin labeling, 801.15; medical devices labeling and use of symbols; 809.10, labeling for in vitro diagnostic products. | 3,000 | 1 | 3,000 | 4 | 12,000 |
| Total | | | 20,447,205 | | 8,485,061 |

[1] There are no capital costs or operating and maintenance costs associated with this collection of information.
[2] Numbers have been rounded.

Because many labeling provisions correspond to specific recordkeeping requirements, we have accounted for burden attendant to the provisions enumerated in table 3 as third-party disclosures. These figures reflect what we believe to be the average burden incurred by respondents to applicable information collection activities.

Overall, the information collection reflects changes and adjustments. For efficiency of operations, we have consolidated related information collection previously approved under OMB control numbers 0910–0577 and 0910–0740. This results in an increase to the information collection by 15,095 burden hours annually (for reporting and disclosure burden related to the symbols glossary regulatory requirements and disclosure burden related to Section 502(u)). We have increased our estimate of the total responses by 21,647,170 annually. The increase is due to adjustments reflecting updated data and the inclusion of the consolidated information collection. At the same time, we have reduced our estimate of disclosure responses by 1,597,520 annually. Upon review, we believe we previously double-counted burden ascribed to disclosures provisions having accounted for the same burden as that associated with recordkeeping activities. Finally, upon submission of the ICR, we are correcting inadvertent calculation errors to the burden hour increase (by adding 12,000 burden hours to account for disclosure of the symbols glossary) and decrease in total responses displayed in our 60-day notice in the **Federal Register** of July 13, 2021.

Dated: October 4, 2021.

**Lauren K. Roth,**

*Associate Commissioner for Policy.*

[FR Doc. 2021–22043 Filed 10–7–21; 8:45 am]

BILLING CODE 4164–01–P

## DEPARTMENT OF HEALTH AND HUMAN SERVICES

### Food and Drug Administration

**[Docket No. FDA–2021–N–1022]**

# Agency Information Collection Activities; Proposed Collection; Comment Request; Reporting Associated With Food Additive Petitions, Investigational Food Additive Files Exemptions, and Declaration of Color Additives on Animal Food Labels

**AGENCY:** Food and Drug Administration, HHS.

**ACTION:** Notice.

**SUMMARY:** The Food and Drug Administration (FDA, Agency, or we) is announcing an opportunity for public comment on the proposed collection of certain information by the Agency. Under the Paperwork Reduction Act of 1995 (PRA), Federal Agencies are required to publish notice in the **Federal Register** concerning each proposed collection of information, including each proposed extension of an existing collection of information, and to allow 60 days for public comment in response to the notice. This notice solicits comments on the information collection provisions associated with food additive petitions, investigational food additive files exemptions, and declaration of color additives on animal food labels.

**DATES:** Submit either electronic or written comments on the collection of information by December 7, 2021.

**ADDRESSES:** You may submit comments as follows. Please note that late, untimely filed comments will not be considered. Electronic comments must be submitted on or before December 7, 2021. The *https://www.regulations.gov* electronic filing system will accept comments until 11:59 p.m. Eastern Time at the end of December 7, 2021. Comments received by mail/hand delivery/courier (for written/paper submissions) will be considered timely if they are postmarked or the delivery service acceptance receipt is on or before that date.

*Electronic Submissions*

Submit electronic comments in the following way:

• *Federal eRulemaking Portal: https://www.regulations.gov.* Follow the instructions for submitting comments. Comments submitted electronically, including attachments, to *https://www.regulations.gov* will be posted to the docket unchanged. Because your comment will be made public, you are solely responsible for ensuring that your comment does not include any confidential information that you or a third party may not wish to be posted, such as medical information, your or anyone else's Social Security number, or confidential business information, such as a manufacturing process. Please note that if you include your name, contact information, or other information that identifies you in the body of your comments, that information will be posted on *https://www.regulations.gov.*

• If you want to submit a comment with confidential information that you do not wish to be made available to the public, submit the comment as a written/paper submission and in the manner detailed (see ''Written/Paper Submissions'' and ''Instructions'').

*Written/Paper Submissions*

Submit written/paper submissions as follows:

• *Mail/Hand delivery/Courier (for written/paper submissions):* Dockets Management Staff (HFA–305), Food and Drug Administration, 5630 Fishers Lane, Rm. 1061, Rockville, MD 20852.

• For written/paper comments submitted to the Dockets Management Staff, FDA will post your comment, as well as any attachments, except for information submitted, marked and identified, as confidential, if submitted as detailed in ''Instructions.''

*Instructions:* All submissions received must include the Docket No. FDA–2021–N–1022 for ''Agency Information Collection Activities; Proposed Collection; Comment Request; Reporting Associated with Food Additive Petitions, Investigational Food Additive Files Exemptions, and Declaration of Color Additives on Animal Food Labels.'' Received comments, those filed in a timely manner (see **ADDRESSES**), will be placed in the docket and, except for those submitted as ''Confidential Submissions,'' publicly viewable at *https://www.regulations.gov* or at the Dockets Management Staff between 9 a.m. and 4 p.m., Monday through Friday, 240–402–7500.

• Confidential Submissions—To submit a comment with confidential information that you do not wish to be made publicly available, submit your comments only as a written/paper submission. You should submit two copies total. One copy will include the information you claim to be confidential with a heading or cover note that states ''THIS DOCUMENT CONTAINS CONFIDENTIAL INFORMATION.'' The Agency will review this copy, including the claimed confidential information, in its consideration of comments. The second copy, which will have the claimed confidential information redacted/blacked out, will be available for public viewing and posted on *https://www.regulations.gov.* Submit both copies to the Dockets Management Staff. If you do not wish your name and contact information to be made publicly available, you can provide this information on the cover sheet and not in the body of your comments and you must identify this information as ''confidential.'' Any information marked as ''confidential'' will not be disclosed except in accordance with 21 CFR 10.20 and other applicable disclosure law. For more information about FDA's posting of comments to public dockets, see 80 FR 56469, September 18, 2015, or access the information at: *https://www.govinfo.gov/content/pkg/FR-2015-09-18/pdf/2015-23389.pdf.*

*Docket:* For access to the docket to read background documents or the electronic and written/paper comments received, go to *https://www.regulations.gov* and insert the docket number, found in brackets in the heading of this document, into the ''Search'' box and follow the prompts and/or go to the Dockets Management Staff, 5630 Fishers Lane, Rm. 1061, Rockville, MD 20852, 240–402–7500.

**FOR FURTHER INFORMATION CONTACT:** Ila S. Mizrachi, Office of Operations, Food and Drug Administration, Three White Flint North, 10A–12M, 11601 Landsdown St., North Bethesda, MD 20852, 301–796–7726, *PRAStaff@fda.hhs.gov.*

**SUPPLEMENTARY INFORMATION:** Under the PRA (44 U.S.C. 3501–3521), Federal Agencies must obtain approval from the Office of Management and Budget (OMB) for each collection of information they conduct or sponsor. ''Collection of information'' is defined in 44 U.S.C. 3502(3) and 5 CFR 1320.3(c) and includes Agency requests or requirements that members of the public submit reports, keep records, or provide information to a third party. Section 3506(c)(2)(A) of the PRA (44 U.S.C. 3506(c)(2)(A)) requires Federal Agencies to provide a 60-day notice in the **Federal Register** concerning each proposed collection of information, including each proposed extension of an existing collection of information, before submitting the collection to OMB for approval. To comply with this requirement, FDA is publishing notice of the proposed collection of information set forth in this document.

With respect to the following collection of information, FDA invites comments on these topics: (1) Whether the proposed collection of information is necessary for the proper performance

of FDA's functions, including whether the information will have practical utility; (2) the accuracy of FDA's estimate of the burden of the proposed collection of information, including the validity of the methodology and assumptions used; (3) ways to enhance the quality, utility, and clarity of the information to be collected; and (4) ways to minimize the burden of the collection of information on respondents, including through the use of automated collection techniques, when appropriate, and other forms of information technology.

**Reporting Associated With Food Additive Petitions, Investigational Food Additive Files Exemptions, and Declaration of Color Additives on Animal Food Labels—21 CFR 501.22(k), 570.17, 571.1, and 571.6**

*OMB Control Number 0910–0546—Extension*

This information collection supports FDA regulations as discussed below. In this notice, we are combining all reporting burden associated with FDA's regulations §§ 501.22(k), 570.17, 571.1, and 571.6 (21 CFR 501.22(k), 570.17, 571.1, and 571.6) into one collection and are consolidating the burden for OMB control numbers 0910–0546 and OMB control number 0910–0721. Upon approval of the consolidated collection OMB control number 0910–0546, we will ask OMB to discontinue OMB control number 0910–0721. The information collection provisions approved under OMB control numbers 0910–0546, and 0910–0721 are similar in that they support FDA's regulations §§ 501.22(k), 570.17, 571.1, and 571.6. Thus, with this notice, FDA proposes to consolidate these collections of information into one OMB control number for government efficiency and to allow the public to look to one OMB control number for all reporting associated with FDA's regulations §§ 501.22(k), 570.17, 571.1, and 571.6.

*Food Additive Petitions and Investigational Food Additive Files Exemptions*

Section 409(a) of the Federal Food, Drug and Cosmetic Act (FD&C Act) (21 U.S.C. 348(a)) provides that a food additive shall be deemed to be unsafe unless its use is permitted by a regulation which prescribes the condition(s) under which it may safely be used, or unless it is exempted by regulation for investigational use. Section 409(b) of FD&C Act specifies the information that must be submitted by a petitioner in order to establish the safety of a food additive and to secure the issuance of a regulation permitting its use.

To implement the provisions of section 409 of the FD&C Act, we issued procedural regulations under 21 CFR part 571. These procedural regulations are designed to specify more thoroughly the information that must be submitted to meet the requirement set down in broader terms by the FD&C Act. The regulations add no substantive requirements to those indicated in the FD&C Act but attempt to explain these requirements and provide a standard format for submission to speed processing of the food additive petition. Labeling requirements for food additives intended for animal consumption are also set forth in various regulations contained in parts 501, 573, and 579 (21 CFR parts 501, 573, and 579). The labeling regulations are considered by FDA to be cross-referenced to § 571.1, which is the subject of this same OMB clearance for food additive petitions.

Regarding the investigational use of food additives, section 409(j) of the FD&C Act provides that any food additive or any food bearing or containing such an additive may be exempted from the requirements of this section if intended solely for investigational use by qualified experts. Investigational use of a food additive is typically to address the safety and/or intended physical or technical effect of the additive. To implement the provisions of section 409(j) of the FD&C Act, we issued regulations under § 570.17. These regulations are designed to specify more thoroughly the information that must be submitted to meet the requirement set down in broad terms by the FD&C Act. Labeling requirements for investigational food additive files are also set forth in various regulations contained in part 501. The labeling regulations are considered by FDA to be cross-referenced to § 570.17, which is the subject of this same OMB clearance for investigational food additive files.

The information collected is necessary to protect the public health. We use the information submitted by food manufacturers or food additive manufacturers to ascertain whether the data establish the identity of the substance, justify its intended effect in/on the food, and establish that its intended use in/on food is safe.

*Animal Food Labeling; Declaration of Certified and Non-Certified Color Additives*

FDA has the authority under the FD&C Act to issue regulations concerning animal food. Specifically, section 403(i) of the FD&C Act (21 U.S.C. 343(i)) requires that certified color additives used in or on a food must be declared by their common or usual names and not be designated by the collective term ''colorings.'' Our regulations in part 501 set forth the requirements for animal food labeling. Under § 501.22(k), animal food manufacturers must declare on the animal food label the presence of certified and noncertified color additives in their animal food products. Our animal food labeling regulation at § 501.22(k) is consistent with the regulations requiring the declaration of color additives on human food labels. The purpose of the labeling is to provide animal owners with information on the color additives used in animal food. Animal owners use the information to become knowledgeable about the foods they purchase for their animals.

*Description of Respondents:* Respondents to this collection of information are manufacturers of animal food products that contain color additives or are manufacturers of food additives.

FDA estimates the burden of this collection of information as follows:

TABLE 1—ESTIMATED ANNUAL REPORTING BURDEN [1]

| 21 CFR section | Number of respondents | Number of responses per respondent | Total annual responses | Average burden per response | Total hours |
|---|---|---|---|---|---|
| **Food Additive Petitions** | | | | | |
| 571.1(c) Moderate Category | 6 | 1 | 6 | 3,000 | 18,000 |
| 571.1(c) Complex Category | 5 | 1 | 5 | 10,000 | 50,000 |
| 571.6 Amendment of Petition | 5 | 1 | 5 | 1,300 | 6,500 |

TABLE 1—ESTIMATED ANNUAL REPORTING BURDEN [1]—Continued

| 21 CFR section | Number of respondents | Number of responses per respondent | Total annual responses | Average burden per response | Total hours |
|---|---|---|---|---|---|
| **Investigational Food Additive Files** | | | | | |
| 570.17 Moderate Category | 6 | 1 | 6 | 1,500 | 9,000 |
| 570.17 Complex Category | 7 | 1 | 7 | 5,000 | 35,000 |
| **Color Additives** | | | | | |
| 501.22(k); labeling of color additive or lake of color additive; labeling of color additives not subject to certification | 3,120 | 0.8292 | 2,587 | * 0.25 | 647 |
| Total Hours | | | | | 119,147 |

[1] There are no capital costs or operating and maintenance costs associated with this collection of information.
* (15 minutes).

For the purpose of this consolidation, we base our estimate of the total annual responses on submissions received during fiscal years 2019 and 2020. We base our estimate of the hours per response on our experience with the labeling, food additive petition, and filing processes.

The information collection reflects a net decrease of 70,453 hours (189,600 OMB approved hours—119,147 estimated hours). We also experienced a net increase of 2,587 responses from 35 OMB approved annual responses to 2,616 estimated annual responses. These changes were due to the consolidating of the information collection covered by OMB control number 0910–0721 and due to estimated changes of the number of respondents for food additive petitions and investigational food additive files.

*Section 571.1(c) Moderate Category:* The estimated time requirement per food additive petition remains at approximately 3,000 hours; however, we now estimate that the number of annual respondents has decreased from 12 to 6 respondents for a total of 18,000 hours.

*Section 571.1(c) Complex Category:* The estimated time requirement per food additive petition remains at approximately 10,000 hours; however, we now estimate that the number of annual respondents has decreased from 12 to 5 respondents for a total of 50,000 hours.

*Section 571.6 Amendment of Petition:* We estimated that the number of annual respondents that will submit an amendment has increased from two to five respondents who will each submit one amendment for a total of 6,500 hours. This is an increase of three respondents and 3,900 hours from the burden approved by OMB.

*Section 570.17 Moderate Category:* We estimated that the number of annual respondents for investigational food additive files has increased from four to six respondents who will each submit one file for a total of 9,000 hours. This is an increase of two respondents and 3,000 hours from the burden approved by OMB.

*Section 570.17 Complex Category:* We estimated that the number of annual respondents for investigational food additive files has increased from five to seven respondents who will each submit one such file, for a total of 35,000 hours. This is an increase of 10,000 hour from the burden approved by OMB.

*Section 501.22(k) Labeling of Color Additive or Lake of Color Additive; Labeling of Color Additives Not Subject to Certification:* The information collection reflects an adjustment in burden by 647 hours and 2,587 responses. We attribute this adjustment due to the consolidation of OMB control number 0910–0546 and OMB control number 0910–0721.

Dated: October 1, 2021.

**Lauren K. Roth,**

*Associate Commissioner for Policy.*

[FR Doc. 2021–22045 Filed 10–7–21; 8:45 am]

BILLING CODE 4164–01–P

## DEPARTMENT OF HEALTH AND HUMAN SERVICES

### Health Resources and Services Administration

### Agency Information Collection Activities: Submission to OMB for Review and Approval; Public Comment Request; Information Collection Request Title: The Maternal, Infant, and Early Childhood Home Visiting Program Quarterly Performance Report, OMB No. 0906–0016, Revision

**AGENCY:** Health Resources and Services Administration (HRSA), Department of Health and Human Services.

**ACTION:** Notice.

**SUMMARY:** In compliance with of the Paperwork Reduction Act of 1995, HRSA has submitted an Information Collection Request (ICR) to the Office of Management and Budget (OMB) for review and approval. Comments submitted during the first public review of this ICR will be provided to OMB. OMB will accept further comments from the public during the review and approval period. OMB may act on HRSA's ICR only after the 30 day comment period for this Notice has closed.

**DATES:** Comments on this ICR should be received no later than November 8, 2021.

**ADDRESSES:** Written comments and recommendations for the proposed information collection should be sent within 30 days of publication of this notice to *www.reginfo.gov/public/do/PRAMain.* Find this particular information collection by selecting ''Currently under Review—Open for Public Comments'' or by using the search function.

**FOR FURTHER INFORMATION CONTACT:** To request a copy of the clearance requests submitted to OMB for review, email Samantha Miller, the HRSA Information Collection Clearance Officer at *paperwork@hrsa.gov* or call (301) 443–9094.

**SUPPLEMENTARY INFORMATION:**

*Information Collection Request Title:* Maternal, Infant, and Early Childhood Home Visiting Program Quarterly Performance Report, OMB No. 0906–0016, Revision.

*Abstract:* This clearance request is for continued approval of the Maternal, Infant, and Early Childhood Home Visiting (MIECHV) Program Quarterly Performance Report. The MIECHV Program, administered by HRSA in partnership with the Administration for Children and Families, supports voluntary, evidence-based home visiting services during pregnancy and to parents with young children up to kindergarten entry. States, certain non-profit organizations, and Tribal entities are eligible to receive funding from the MIECHV Program and have the flexibility to tailor the program to serve the specific needs of their communities.

A 60-Day notice was published in the **Federal Register**, 86 FR 35809 (July 7, 2021). There were two public comments. These comments expressed support for proposed updates to definitions of key terms and provided suggestions to improve clarity and reduce reporting burden related to quarterly information reporting. HRSA appreciates these comments and suggestions to the information collection. Comments also raised questions about existing guidance that do not appear to require amendments to the guidance and that HRSA therefore intends to address through technical assistance. After taking these comments into consideration, HRSA intends the following proposed revisions to Form 4:

- Form 4, Reporting guidance: Revise reporting instructions and links to reflect updated reporting requirements.
- Form 4, Definition of Key Terms: Update definitions for Table A.1.
- Form 4, Definition of Key Terms: Add definitions for Table A.2.
- Form 4, Due date: The due date will be revised to 45 days after the end of each reporting period.

HRSA requests approval to expand the use of Form 4 in order to collect quarterly performance data from awardees who receive MIECHV funding appropriated by section 9101 of the American Rescue Plan Act (Pub. L. 117–2).

*Need and Proposed Use of the Information:* HRSA uses quarterly performance information to demonstrate program accountability and continuously monitor and provide oversight to MIECHV Program awardees. The information is also used to provide quality improvement guidance and technical assistance to awardees and help inform the development of early childhood systems at the national, state, and local level. HRSA seeks to revise reporting instructions and definitions of key terms and to expand the use of Form 4 in order to collect distinct quarterly performance data related to the use of American Rescue Plan Act funds. This notice is subject to the appropriation of funds, and is a contingency action taken to ensure that, should funds become available for this purpose, information can be collected in a timely manner.

*Likely Respondents:* MIECHV Program awardees are states, jurisdictions, and, where applicable, nonprofit organizations receiving MIECHV funding to provide home visiting services within states.

*Burden Statement:* Burden in this context means the time expended by persons to generate, maintain, retain, disclose, or provide the information requested. This includes the time needed to review instructions; to develop, acquire, install, and utilize technology and systems for the purpose of collecting, validating, and verifying information, processing and maintaining information, and disclosing and providing information; to train personnel and to be able to respond to a collection of information; to search data sources; to complete and review the collection of information; and to transmit or otherwise disclose the information. The total annual burden hours estimated for this ICR are summarized in the table below.

TOTAL ESTIMATED ANNUALIZED BURDEN HOURS

| Form name | Number of respondents | Number of responses per respondent | Total responses | Average burden per response (in hours) | Total burden hours |
|---|---|---|---|---|---|
| Form 4: Section A—Quarterly Performance Report | 56 | 8 | 448 | 24 | 10,752 |
| Form 4: Section B—Quarterly Benchmark Performance Measures | 10 | 4 | 40 | 200 | 8,000 |
| Total | [1] 56 | | 488 | | 18,752 |

[1] The 10 responses for Section B are a sub-set of 56 total awardees funded through the MIECHV Program.

HRSA specifically requests comments on (1) the necessity and utility of the proposed information collection for the proper performance of the agency's functions, (2) the accuracy of the estimated burden, (3) ways to enhance the quality, utility, and clarity of the information to be collected, and (4) the use of automated collection techniques or other forms of information technology to minimize the information collection burden.

**Maria G. Button,**

*Director, Executive Secretariat.*

[FR Doc. 2021–22004 Filed 10–7–21; 8:45 am]

BILLING CODE 4165–15–P

## DEPARTMENT OF HEALTH AND HUMAN SERVICES

### National Institutes of Health

### Center for Scientific Review; Notice of Closed Meetings

Pursuant to section 10(d) of the Federal Advisory Committee Act, as amended, notice is hereby given of the following meetings.

The meetings will be closed to the public in accordance with the provisions set forth in sections 552b(c)(4) and 552b(c)(6), Title 5 U.S.C.,

as amended. The grant applications and the discussions could disclose confidential trade secrets or commercial property such as patentable material, and personal information concerning individuals associated with the grant applications, the disclosure of which would constitute a clearly unwarranted invasion of personal privacy.

*Name of Committee:* Center for Scientific Review Special Emphasis Panel; Interdisciplinary Molecular Sciences and Training Member Conflict.
*Date:* November 3, 2021.
*Time:* 1:00 p.m. to 7:00 p.m.
*Agenda:* To review and evaluate grant applications.
*Place:* National Institutes of Health, Rockledge II, 6701 Rockledge Drive, Bethesda, MD 20892 (Virtual Meeting).
*Contact Person:* Raj K. Krishnaraju, Ph.D., Scientific Review Officer, Center for Scientific Review, National Institutes of Health, 6701 Rockledge Drive, Room 6190, Bethesda, MD 20892, 301–435–1047, *kkrishna@csr.nih.gov*.

*Name of Committee:* Population Sciences and Epidemiology Integrated Review Group; Infectious Diseases, Reproductive Health, Asthma and Pulmonary Conditions Study Section.
*Date:* November 8–9, 2021.
*Time:* 9:00 a.m. to 8:00 p.m.
*Agenda:* To review and evaluate grant applications.
*Place:* National Institutes of Health, Rockledge II, 6701 Rockledge Drive, Bethesda, MD 20892 (Virtual Meeting).
*Contact Person:* Mohammed F.A. Elfaramawi, Ph.D., MD, Scientific Review Officer, Center for Scientific Review, National Institutes of Health, 6701 Rockledge Drive, Room 1007F, Bethesda, MD 20892, (301) 402–6746, *elfaramawimf@csr.nih.gov*.

*Name of Committee:* Center for Scientific Review Special Emphasis Panel; Small Business: Respiratory Sciences.
*Date:* November 9–10, 2021.
*Time:* 8:00 a.m. to 4:00 p.m.
*Agenda:* To review and evaluate grant applications.
*Place:* National Institutes of Health, Rockledge II, 6701 Rockledge Drive, Bethesda, MD 20892 (Virtual Meeting).
*Contact Person:* Xiang-Ning Li, MD, Ph.D., Scientific Review Officer, Center for Scientific Review, National Institutes of Health, 6701 Rockledge Drive, Room 5112, MSC 7854, Bethesda, MD 20892, 301–435–1744, *lixiang@csr.nih.gov*.

*Name of Committee:* Center for Scientific Review Special Emphasis Panel; PAR Panel—Fertility Status as a Marker for Overall Health.
*Date:* November 9, 2021.
*Time:* 10:00 a.m. to 6:00 p.m.
*Agenda:* To review and evaluate grant applications.
*Place:* National Institutes of Health, Rockledge II, 6701 Rockledge Drive, Bethesda, MD 20892 (Virtual Meeting).
*Contact Person:* Anthony Wing Sang Chan, Ph.D., Scientific Review Officer, Center for Scientific Review, National Institute of Health, 6701 Rockledge Drive, Room 809K, Bethesda, MD 20892, (301) 435–5000, *chana2@csr.nih.gov*.

*Name of Committee:* Center for Scientific Review Special Emphasis Panel; Member Conflict: Cardiovascular Sciences.
*Date:* November 9, 2021.
*Time:* 10:00 a.m. to 5:00 p.m.
*Agenda:* To review and evaluate grant applications.
*Place:* National Institutes of Health, Rockledge II, 6701 Rockledge Drive, Bethesda, MD 20892 (Virtual Meeting).
*Contact Person:* Sara Ahlgren, Ph.D., Scientific Review Officer, Center for Scientific Review, National Institutes of Health, 6701 Rockledge Drive, RM 4136, Bethesda, MD 20892, 301–435–0904, *sara.ahlgren@nih.gov*.

*Name of Committee:* Center for Scientific Review Special Emphasis Panel; PAR: S10 Biomedical Research Support Shared Instrumentation Grants.
*Date:* November 12, 2021.
*Time:* 10:00 a.m. to 7:30 p.m.
*Agenda:* To review and evaluate grant applications.
*Place:* National Institutes of Health, Rockledge II, 6701 Rockledge Drive, Bethesda, MD 20892 (Virtual Meeting).
*Contact Person:* Vinod Charles, Ph.D., Scientific Review Officer, Division of Extramural Activities, National Institute of Mental Health, NIH, Neuroscience Center, 6001 Executive Blvd., Room 6151, MSC 9606, Bethesda, MD 20892–9606, 301–443–1606, *charlesvi@mail.nih.gov*.

*Name of Committee:* Healthcare Delivery and Methodologies Integrated Review Group; Population and Public Health Approaches to HIV/AIDS Study Section.
*Date:* November 15–16, 2021.
*Time:* 9:00 a.m. to 7:00 p.m.
*Agenda:* To review and evaluate grant applications.
*Place:* National Institutes of Health, Rockledge II, 6701 Rockledge Drive, Bethesda, MD 20892 (Virtual Meeting).
*Contact Person:* Jose H. Guerrier, Ph.D., Scientific Review Officer, Center for Scientific Review, National Institutes of Health, 6701 Rockledge Drive, Room 5222, MSC 7852, Bethesda, MD 20892, 301–435–1137, *guerriej@csr.nih.gov*.

*Name of Committee:* Center for Scientific Review Special Emphasis Panel; Small Business Panel: Innovative Immunology.
*Date:* November 15, 2021.
*Time:* 9:30 a.m. to 8:30 p.m.
*Agenda:* To review and evaluate grant applications.
*Place:* National Institutes of Health, Rockledge II, 6701 Rockledge Drive, Bethesda, MD 20892 (Virtual Meeting).
*Contact Person:* Dayadevi Balappa Jirage, Ph.D., Scientific Review Officer, Center for Scientific Review, National Institutes of Health, 6700B Rockledge Drive, Room 4422, Bethesda, MD 20892, (301) 867–5309, *jiragedb@csr.nih.gov*.

*Name of Committee:* Center for Scientific Review Special Emphasis Panel; BST–G 80 Bioengineering Science and Technologies: Special Topics in Biomaterials and Biointerfaces.
*Date:* November 15, 2021.
*Time:* 9:30 a.m. to 8:00 p.m.
*Agenda:* To review and evaluate grant applications.
*Place:* National Institutes of Health, Rockledge II, 6701 Rockledge Drive, Bethesda, MD 20892 (Virtual Meeting).
*Contact Person:* William A. Greenberg, Ph.D., Scientific Review Officer, Center for Scientific Review, National Institutes of Health, 6701 Rockledge Drive, Room 4168, MSC 7806, Bethesda, MD 20892, (301) 435–1726, *greenbergwa@csr.nih.gov*.

*Name of Committee:* Risk, Prevention and Health Behavior Integrated Review Group; HIV/AIDS Intra- and Inter-personal Determinants and Behavioral Interventions Study Section.
*Date:* November 15–16, 2021.
*Time:* 10:00 a.m. to 8:00 p.m.
*Agenda:* To review and evaluate grant applications.
*Place:* National Institutes of Health, Rockledge II, 6701 Rockledge Drive, Bethesda, MD 20892 (Virtual Meeting).
*Contact Person:* Mark P. Rubert, Ph.D., Scientific Review Officer, Center for Scientific Review, National Institutes of Health, 6701 Rockledge Drive, Room 5218, MSC 7852, Bethesda, MD 20892, 301–806–6596, *rubertm@csr.nih.gov*.

*Name of Committee:* Center for Scientific Review Special Emphasis Panel; Shared Instrumentation: Flow Cytometry.
*Date:* November 15, 2021.
*Time:* 10:00 a.m. to 8:00 p.m.
*Agenda:* To review and evaluate grant applications.
*Place:* National Institutes of Health, Rockledge II, 6701 Rockledge Drive, Bethesda, MD 20892 (Virtual Meeting).
*Contact Person:* Jessica Smith, Ph.D., Scientific Review Officer, Center for Scientific Review, National Institutes of Health, 6701 Rockledge Drive, Bethesda, MD 20892, (301) 402–3717, *jessica.smith6@nih.gov*.

*Name of Committee:* Center for Scientific Review Special Emphasis Panel; Small Business Applications: Drug Discovery and Development.
*Date:* November 15–16, 2021.
*Time:* 10:00 a.m. to 8:30 p.m.
*Agenda:* To review and evaluate grant applications.
*Place:* National Institutes of Health, Rockledge II, 6701 Rockledge Drive, Bethesda, MD 20892 (Virtual Meeting).
*Contact Person:* Sergei Ruvinov, Ph.D., Scientific Review Officer, Center for Scientific Review, National Institutes of Health, 6701 Rockledge Drive, Room 4158, MSC 7806, Bethesda, MD 20892, 301–435–1180, *ruvinser@csr.nih.gov*.

*Name of Committee:* Center for Scientific Review Special Emphasis Panel; Member Conflict: Topics in Bacterial Pathogenesis and Virulence.
*Date:* November 16, 2021.
*Time:* 10:00 a.m. to 7:00 p.m.
*Agenda:* To review and evaluate grant applications.
*Place:* National Institutes of Health, Rockledge II, 6701 Rockledge Drive, Bethesda, MD 20892 (Virtual Meeting).

*Contact Person:* Tera Bounds, Ph.D., DVM, Scientific Review Officer, Center for Scientific Review, National Institutes of Health, 6701 Rockledge Drive, Room 3198, MSC 7808, Bethesda, MD 20892, 301 613 2822, *boundst@csr.nih.gov*.

*Name of Committee:* Center for Scientific Review Special Emphasis Panel; Member Conflict: Cellular Systems and Biology of the Eye.

*Date:* November 16, 2021.

*Time:* 1:00 p.m. to 6:00 p.m.

*Agenda:* To review and evaluate grant applications.

*Place:* National Institutes of Health, Rockledge II, 6701 Rockledge Drive, Bethesda, MD 20892 (Virtual Meeting).

*Contact Person:* Tami Jo Kingsbury, Ph.D., Scientific Review Officer, Center for Scientific Review, National Institutes of Health, 6701 Rockledge Drive, Room 710Q, Bethesda, MD 20892, (410) 274–1352, *tami.kingsbury@nih.gov*.

*Name of Committee:* Infectious Diseases and Immunology B Integrated Review Group; HIV Comorbidities and Clinical Studies Study Section.

*Date:* November 16–17, 2021.

*Time:* 9:00 p.m. to 8:00 p.m.

*Agenda:* To review and evaluate grant applications.

*Place:* National Institutes of Health, Rockledge II, 6701 Rockledge Drive, Bethesda, MD 20892 (Virtual Meeting).

*Contact Person:* David C. Chang, Ph.D., Scientific Review Officer, Center for Scientific Review, National Institutes of Health, 6701 Rockledge Drive, Bethesda, MD 20892, (301) 451–0290, *changdac@mail.nih.gov*.

(Catalogue of Federal Domestic Assistance Program Nos. 93.306, Comparative Medicine; 93.333, Clinical Research, 93.306, 93.333, 93.337, 93.393–93.396, 93.837–93.844, 93.846–93.878, 93.892, 93.893, National Institutes of Health, HHS)

Dated: October 4, 2021.

**Miguelina Perez,**

*Program Analyst, Office of Federal Advisory Committee Policy.*

[FR Doc. 2021–21997 Filed 10–7–21; 8:45 am]

**BILLING CODE 4140–01–P**

## DEPARTMENT OF HEALTH AND HUMAN SERVICES

### National Institutes of Health

### Center for Scientific Review; Notice of Closed Meetings

Pursuant to section 10(d) of the Federal Advisory Committee Act, as amended, notice is hereby given of the following meetings.

The meetings will be closed to the public in accordance with the provisions set forth in sections 552b(c)(4) and 552b(c)(6), Title 5 U.S.C., as amended. The grant applications and the discussions could disclose confidential trade secrets or commercial property such as patentable material, and personal information concerning individuals associated with the grant applications, the disclosure of which would constitute a clearly unwarranted invasion of personal privacy.

*Name of Committee:* Brain Disorders and Clinical Neuroscience Integrated Review Group; Pathophysiology of Eye Disease—1 Study Section.

*Date:* October 28–29, 2021.

*Time:* 8:30 a.m. to 7:00 p.m.

*Agenda:* To review and evaluate grant applications.

*Place:* National Institutes of Health, Rockledge II, 6701 Rockledge Drive, Bethesda, MD 20892 (Virtual Meeting).

*Contact Person:* Afia Sultana, Ph.D., Scientific Review Officer, Center for Scientific Review, National Institutes of Health, 6701 Rockledge Drive, Room 4189, Bethesda, MD 20892, (301) 827–7083, *sultanaa@mail.nih.gov*.

*Name of Committee:* Brain Disorders and Clinical Neuroscience Integrated Review Group; Clinical Neuroplasticity and Neurotransmitters Study Section.

*Date:* October 28–29, 2021.

*Time:* 9:00 a.m. to 7:00 p.m.

*Agenda:* To review and evaluate grant applications.

*Place:* National Institutes of Health, Rockledge II, 6701 Rockledge Drive, Bethesda, MD 20892 (Virtual Meeting).

*Contact Person:* Suzan Nadi, Ph.D., Scientific Review Officer, Center for Scientific Review, National Institutes of Health, 6701 Rockledge Drive, Room 5217B, MSC 7846, Bethesda, MD 20892, 301–435–1259, *nadis@csr.nih.gov*.

*Name of Committee:* Center for Scientific Review Special Emphasis Panel; Fellowships: Genes, Genomes and Genetics.

*Date:* October 28–29, 2021.

*Time:* 9:00 a.m. to 6:00 p.m.

*Agenda:* To review and evaluate grant applications.

*Place:* National Institutes of Health, Rockledge II, 6701 Rockledge Drive, Bethesda, MD 20892 (Virtual Meeting).

*Contact Person:* Lystranne Alysia Maynard Smith, Ph.D., Scientific Review Officer, Center for Scientific Review, National Institutes of Health, 6701 Rockledge Drive, Bethesda, MD 20892, 301–402–4809, *lystranne.maynard-smith@nih.gov*.

*Name of Committee:* Center for Scientific Review Special Emphasis Panel; PAR Panel: CounterACT-Countermeasures Against Chemical Threats: Exploratory applications.

*Date:* October 28–29, 2021.

*Time:* 10:00 a.m. to 4:00 p.m.

*Agenda:* To review and evaluate grant applications.

*Place:* National Institutes of Health, Rockledge II, 6701 Rockledge Drive, Bethesda, MD 20892 (Virtual Meeting).

*Contact Person:* Geoffrey G. Schofield, Ph.D., Scientific Review Officer, Center for Scientific Review, National Institutes of Health, 6701 Rockledge Drive, Room 4040–A, MSC 7850, Bethesda, MD 20892, 301–435–1235, *geoffreys@csr.nih.gov*.

*Name of Committee:* Center for Scientific Review Special Emphasis Panel; Pulmonary Immune Host Defense.

*Date:* November 1, 2021.

*Time:* 9:30 a.m. to 9:00 p.m.

*Agenda:* To review and evaluate grant applications.

*Place:* National Institutes of Health, Rockledge II, 6701 Rockledge Drive Bethesda, MD 20892 (Virtual Meeting).

*Contact Person:* Scott Jakes, Ph.D., Scientific Review Officer, Center for Scientific Review, National Institutes of Health, 6701 Rockledge Drive, Room 4198, MSC 7812, Bethesda, MD 20892, 301–435–1506, *jakesse@mail.nih.gov*.

(Catalogue of Federal Domestic Assistance Program Nos. 93.306, Comparative Medicine; 93.333, Clinical Research, 93.306, 93.333, 93.337, 93.393–93.396, 93.837–93.844, 93.846–93.878, 93.892, 93.893, National Institutes of Health, HHS)

Dated: October 4, 2021.

**Miguelina Perez,**

*Program Analyst, Office of Federal Advisory Committee Policy.*

[FR Doc. 2021–21990 Filed 10–7–21; 8:45 am]

**BILLING CODE 4140–01–P**

## DEPARTMENT OF HEALTH AND HUMAN SERVICES

### National Institutes of Health

### National Cancer Institute; Notice of Closed Meeting

Pursuant to section 10(d) of the Federal Advisory Committee Act, as amended, notice is hereby given of a meeting of the Board of Scientific Counselors, National Cancer Institute.

The meeting will be closed to the public as indicated below in accordance with the provisions set forth in sections 552b(c)(6), Title 5 U.S.C., as amended for the review, discussion, and evaluation of individual intramural programs and projects conducted by the National Cancer Institute, including consideration of personnel qualifications and performance, and the competence of individual investigators, the disclosure of which would constitute a clearly unwarranted invasion of personal privacy.

*Name of Committee:* Board of Scientific Counselors, National Cancer Institute.

*Date:* November 9, 2021.

*Time:* 11:00 a.m. to 5:30 p.m.

*Agenda:* To review and evaluate personnel qualifications and performance, and competence of individual investigators.

*Place:* National Cancer Institute Shady Grove, 9609 Medical Center Drive, Rockville, MD 20850 (Virtual Meeting).

*Contact Person:* Brian E. Wojcik, Ph.D., Senior Review Administrator, Institute Review Office, Office of the Director, National Cancer Institute, National Institutes of Health, 9609 Medical Center Drive, Room

3W414, Rockville, MD 20850, 240–276–5660, *wojcikb@mail.nih.gov*.

(Catalogue of Federal Domestic Assistance Program Nos. 93.392, Cancer Construction; 93.393, Cancer Cause and Prevention Research; 93.394, Cancer Detection and Diagnosis Research; 93.395, Cancer Treatment Research; 93.396, Cancer Biology Research; 93.397, Cancer Centers Support; 93.398, Cancer Research Manpower; 93.399, Cancer Control, National Institutes of Health, HHS)

Dated: October 5, 2021.

**Melanie J. Pantoja,**

*Program Analyst, Office of Federal Advisory Committee Policy.*

[FR Doc. 2021–22025 Filed 10–7–21; 8:45 am]

**BILLING CODE 4140–01–P**

## DEPARTMENT OF HEALTH AND HUMAN SERVICES

### National Institutes of Health

### National Center for Complementary & Integrative Health; Notice of Closed Meeting

Pursuant to section 10(d) of the Federal Advisory Committee Act, as amended, notice is hereby given of the following meeting.

The meeting will be closed to the public in accordance with the provisions set forth in sections 552b(c)(4) and 552b(c)(6), Title 5 U.S.C., as amended. The grant applications and the discussions could disclose confidential trade secrets or commercial property such as patentable material, and personal information concerning individuals associated with the grant applications, the disclosure of which would constitute a clearly unwarranted invasion of personal privacy.

*Name of Committee:* National Center for Complementary and Integrative Health Special Emphasis Panel; NCCIH Training and Education Review Panel (CT).

*Date:* November 18–19, 2021.

*Time:* 10:00 a.m. to 1:00 p.m.

*Agenda:* To review and evaluate grant applications.

*Place:* NIH/NCCIH, Democracy II, 6707 Democracy Blvd., Bethesda, MD 20817 (Virtual Meeting).

*Contact Person:* Patrick Colby Still, Ph.D., Scientific Review Officer, Office of Scientific Review, Division of Extramural Activities, NCCIH/NIH, 6707 Democracy Boulevard, Suite 401, Bethesda, MD 20892–5475, *patrick.still@nih.gov.*

(Catalogue of Federal Domestic Assistance Program Nos. 93.213, Research and Training in Complementary and Alternative Medicine, National Institutes of Health, HHS)

Dated: October 4, 2021.

**Victoria E. Townsend,**

*Program Analyst, Office of Federal Advisory Committee Policy.*

[FR Doc. 2021–22013 Filed 10–7–21; 8:45 am]

**BILLING CODE 4140–01–P**

## DEPARTMENT OF HEALTH AND HUMAN SERVICES

### National Institutes of Health

### National Institute of Allergy and Infectious Diseases; Notice of Closed Meeting

Pursuant to section 10(d) of the Federal Advisory Committee Act, as amended, notice is hereby given of the following meeting.

The meeting will be closed to the public in accordance with the provisions set forth in sections 552b(c)(4) and 552b(c)(6), Title 5 U.S.C., as amended. The grant applications and the discussions could disclose confidential trade secrets or commercial property such as patentable material, and personal information concerning individuals associated with the grant applications, the disclosure of which would constitute a clearly unwarranted invasion of personal privacy.

*Name of Committee:* National Institute of Allergy and Infectious Diseases Special Emphasis Panel; Immune Development in Early Life (IDEaL) (U01 Clinical Trial Not Allowed).

*Date:* November 2–3, 2021.

*Time:* 10:00 a.m. to 5:00 p.m.

*Agenda:* To review and evaluate grant applications.

*Place:* National Institute of Allergy and Infectious Diseases, National Institutes of Health, 5601 Fishers Lane, Room 3G41, Rockville, MD 20892 (Virtual Meeting).

*Contact Person:* Kelly L. Hudspeth, Ph.D., Scientific Review Officer, Scientific Review Program, Division of Extramural Activities, National Institute of Allergy and Infectious Diseases, National Institutes of Health, 5601 Fishers Lane, Room 3G41, Rockville, MD 20852, 240–669–5067, *kelly.hudspeth@nih.gov*.

(Catalogue of Federal Domestic Assistance Program Nos. 93.855, Allergy, Immunology, and Transplantation Research; 93.856, Microbiology and Infectious Diseases Research, National Institutes of Health, HHS)

Dated: October 5, 2021.

**Tyeshia M. Roberson-Curtis,**

*Program Analyst, Office of Federal Advisory Committee Policy.*

[FR Doc. 2021–22026 Filed 10–7–21; 8:45 am]

**BILLING CODE 4140–01–P**

## DEPARTMENT OF HEALTH AND HUMAN SERVICES

### National Institutes of Health

### National Center for Complementary & Integrative Health; Notice of Closed Meeting

Pursuant to section 10(d) of the Federal Advisory Committee Act, as amended, notice is hereby given of the following meeting.

The meeting will be closed to the public in accordance with the provisions set forth in sections 552b(c)(4) and 552b(c)(6), Title 5 U.S.C., as amended. The grant applications and the discussions could disclose confidential trade secrets or commercial property such as patentable material, and personal information concerning individuals associated with the grant applications, the disclosure of which would constitute a clearly unwarranted invasion of personal privacy.

*Name of Committee:* National Center for Complementary and Integrative Health Special Emphasis Panel; Pilot Projects Increasing the Impact of the NIH Centers for Advancing Research on Botanicals and Other Natural Products.

*Date:* November 19, 2021.

*Time:* 2:00 p.m. to 5:00 p.m.

*Agenda:* To review and evaluate grant applications.

*Place:* NIH/NCCIH, 6707 Democracy Blvd., Bethesda, MD 20817 (Virtual Meeting).

*Contact Person:* Patrick Colby Still, Ph.D., Scientific Review Officer, Office of Scientific Review, Division of Extramural Activities, NCCIH/NIH, 6707 Democracy Boulevard, Suite 401, Bethesda, MD 20892–5475, *patrick.still@nih.gov.*

(Catalogue of Federal Domestic Assistance Program Nos. 93.213, Research and Training in Complementary and Alternative Medicine, National Institutes of Health, HHS)

Dated: October 4, 2021.

**Victoria E. Townsend,**

*Program Analyst, Office of Federal Advisory Committee Policy.*

[FR Doc. 2021–22012 Filed 10–7–21; 8:45 am]

**BILLING CODE 4140–01–P**

## DEPARTMENT OF HEALTH AND HUMAN SERVICES

### National Institutes of Health

### National Center for Complementary & Integrative Health; Notice of Closed Meeting

Pursuant to section 10(d) of the Federal Advisory Committee Act, as amended, notice is hereby given of the following meeting.

The meeting will be closed to the public in accordance with the

provisions set forth in sections 552b(c)(4) and 552b(c)(6), Title 5 U.S.C., as amended. The grant applications and the discussions could disclose confidential trade secrets or commercial property such as patentable material, and personal information concerning individuals associated with the grant applications, the disclosure of which would constitute a clearly unwarranted invasion of personal privacy.

*Name of Committee:* National Center for Complementary and Integrative Health Special Emphasis Panel; (NIH/NCCIH) Mind and Body Special Emphasis Panel.

*Date:* November 5, 2021.

*Time:* 11:00 a.m. to 4:00 p.m.

*Agenda:* To review and evaluate grant applications.

*Place:* National Center for Complementary and Integrative, Democracy II, 6707 Democracy Blvd., Bethesda, MD 20892 (Virtual Meeting).

*Contact Person:* Sushmita Purkayastha, Ph.D., Scientific Review Officer, Office of Scientific Review, Division of Extramural Activities, NCCIH/NIH, 6707 Democracy Boulevard, Suite 401, Bethesda, MD 20892–5475, *sushmita.purkayastha@nih.gov*.

(Catalogue of Federal Domestic Assistance Program Nos. 93.213, Research and Training in Complementary and Alternative Medicine, National Institutes of Health, HHS)

Dated: October 4, 2021.

**Victoria E. Townsend,**

*Program Analyst, Office of Federal Advisory Committee Policy.*

[FR Doc. 2021–22014 Filed 10–7–21; 8:45 am]

**BILLING CODE 4140–01–P**

## DEPARTMENT OF HOMELAND SECURITY

### Federal Emergency Management Agency

**[Docket ID FEMA–2007–0008]**

### National Advisory Council; Meeting

**AGENCY:** Federal Emergency Management Agency, Department of Homeland Security.

**ACTION:** Committee Management; Notice of open Federal Advisory Committee meeting.

**SUMMARY:** The Federal Emergency Management Agency's National Advisory Council (NAC) will meet November 2 and 3, 2021. The meeting will be open to the public through virtual means.

**DATES:** The NAC will meet 8:30 a.m. and 5 p.m. Eastern Time (ET) on Tuesday, November 2, 2021 and Wednesday, November 3, 2021. Please note that the meeting may close early if the NAC has completed its business.

**ADDRESSES:** Anyone who wishes to participate must register with FEMA in advance by providing their name, official title, organization, telephone number, and email address to the person listed in the **FOR FURTHER INFORMATION CONTACT** caption below by 5 p.m. ET Friday, October 29, 2021. Members of the public are urged to provide written comments on the issues to be considered by the NAC. The topic areas are indicated in the **SUPPLEMENTARY INFORMATION** caption below. Any written comments must be submitted and received by 5 p.m. ET on October 29, 2021, identified by Docket ID FEMA–2007–0008, and submitted by the following method: Federal eRulemaking Portal at *http://www.regulations.gov*. Follow the instructions for submitting comments.

*Instructions for Submitting Comments:* All submissions must include the words ''Federal Emergency Management Agency'' and the docket number (Docket ID FEMA–2007–0008) for this action. Comments received, including any personal information provided, will be posted without alteration at *http://www.regulations.gov*. For access to the docket or to read comments received by the NAC, go to *http://www.regulations.gov,* and search for Docket ID FEMA–2007–0008.

Public comment periods will be held on Tuesday, November 2, 2021, from 9:45 a.m. to 10:00 a.m.; and Wednesday, November 3, 2021 from 8:45 a.m. to 9:00 a.m. ET. All speakers must register in advance of the meeting to make remarks during the public comment period and must limit their comments to three minutes. Comments should be addressed to the NAC. Any comments not related to the agenda topics will not be considered. To register to make remarks during the public comment period, contact the person listed in the **FOR FURTHER INFORMATION CONTACT** caption below by 5 p.m. ET, Friday, October 29, 2021. Please note that the public comment period may end before the time indicated, following the last call for comments.

Reasonable accommodations are available for people with disabilities. To request a reasonable accommodation, contact the person listed in the **FOR FURTHER INFORMATION CONTACT** caption below as soon as possible. Last minute requests will be accepted but may not be possible to fulfill.

**FOR FURTHER INFORMATION CONTACT:** Rob Long, Designated Federal Officer, Office of the National Advisory Council, Federal Emergency Management Agency, 500 C Street SW, Washington, DC 20472–3184, 202–709–0783, and email *FEMA-NAC@fema.dhs.gov.* The NAC website is *http://www.fema.gov/national-advisory-council.*

**SUPPLEMENTARY INFORMATION:** Notice of this meeting is given under the Federal Advisory Committee Act, 5 U.S.C. Appendix.

The NAC advises the FEMA Administrator on all aspects of emergency management. The NAC incorporates input from State, local, Tribal, and territorial governments, and the private sector in the development and revision of FEMA plans and strategies. The NAC includes a cross-section of officials, emergency managers, and emergency response providers from State, local, Tribal, and territorial governments, the private sector, and nongovernmental organizations.

*Agenda:* On Tuesday, November 2, 2021, NAC subcommittees will present to the full NAC their recommendations on the topics of equity, potential improvements to the public and individual assistance programs, workforce support, risk-informed decision making, and ideas of restructuring FEMA. On Wednesday, November 3, 2021, the NAC will discuss and consider with selected experts and leadership how to approach considering issues of equity, climate adaptation and readiness in 2022.

The full agenda and any related documents for this meeting will be available by Friday, October 29, 2021, by contacting the person listed in the **FOR FURTHER INFORMATION CONTACT** caption above.

**Deanne Criswell,**

*Administrator, Federal Emergency Management Agency.*

[FR Doc. 2021–22058 Filed 10–7–21; 8:45 am]

**BILLING CODE 9111–48–P**

## DEPARTMENT OF HOMELAND SECURITY

### Federal Emergency Management Agency

**[Docket ID FEMA–2020–0016]**

### Meetings To Implement Pandemic Response Voluntary Agreement Under Section 708 of the Defense Production Act

**AGENCY:** Federal Emergency Management Agency, Department of Homeland Security.

**ACTION:** Announcement of meetings.

**SUMMARY:** The Federal Emergency Management Agency (FEMA) held two meetings to implement the Voluntary

Agreement for the Manufacture and Distribution of Critical Healthcare Resources Necessary to Respond to a Pandemic.

**DATES:** The first meeting took place on Thursday, September 30, 2021, from 10:30 a.m. to 11 a.m. Eastern Time (ET). The second meeting took place on Thursday, October 7, 2021, from 10:30 a.m. to 11 a.m. ET.

**FOR FURTHER INFORMATION CONTACT:** Robert Glenn, Office of Business, Industry, Infrastructure Integration, via email at *OB3I@fema.dhs.gov* or via phone at (202) 212–1666.

**SUPPLEMENTARY INFORMATION:** Notice of these meetings is provided as required by section 708(h)(8) of the Defense Production Act (DPA), 50 U.S.C. 4558(h)(8), and consistent with 44 CFR part 332.

The DPA authorizes the making of ''voluntary agreements and plans of action'' with representatives of industry, business, and other interests to help provide for the national defense.[1] The President's authority to facilitate voluntary agreements with respect to responding to the spread of COVID–19 within the United States was delegated to the Secretary of Homeland Security in Executive Order 13911.[2] The Secretary of Homeland Security further delegated this authority to the FEMA Administrator.[3]

On August 17, 2020, after the appropriate consultations with the Attorney General and the Chairman of the Federal Trade Commission, FEMA completed and published in the **Federal Register** a ''Voluntary Agreement, Manufacture and Distribution of Critical Healthcare Resources Necessary to Respond to a Pandemic'' (Voluntary Agreement).[4] Unless terminated earlier, the Voluntary Agreement is effective until August 17, 2025, and may be extended subject to additional approval by the Attorney General after consultation with the Chairman of the Federal Trade Commission. The Agreement may be used to prepare for or respond to any pandemic, including COVID–19, during that time.

On December 7, 2020, the first plan of action under the Voluntary Agreement—the Plan of Action to Establish a National Strategy for the Manufacture, Allocation, and Distribution of Personal Protective Equipment (PPE) to Respond to COVID–19 (PPE Plan of Action)—was finalized.[5] The PPE Plan of Action established several sub-committees under the Voluntary Agreement, focusing on different aspects of the PPE Plan of Action.

On May 24, 2021, four additional plans of action under the Voluntary Agreement—the Plan of Action to Establish a National Strategy for the Manufacture, Allocation, and Distribution of Diagnostic Test Kits and other Testing Components to respond to COVID–19, the Plan of Action to Establish a National Strategy for the Manufacture, Allocation, and Distribution of Drug Products, Drug Substances, and Associated Medical Devices to respond to COVID–19, the Plan of Action to Establish a National Strategy for the Manufacture, Allocation, and Distribution of Medical Devices to respond to COVID–19, and the Plan of Action to Establish a National Strategy for the Manufacture, Allocation, and Distribution of Medical Gases to respond to COVID–19—were finalized.[6] These plans of action established several sub-committees under the Voluntary Agreement, focusing on different aspects of each plan of action.

The meetings were chaired by the FEMA Administrator or her delegate and attended by the Attorney General and the Chairman of the Federal Trade Commission or their delegates. In implementing the Voluntary Agreement, FEMA adheres to all procedural requirements of 50 U.S.C. 4558 and 44 CFR part 332.

*Meeting Objectives:* The objectives of the meetings were as follows:

1. Gather committee Participants and Attendees to ask targeted questions for situational awareness related to the active Plans of Action (PPE, Drug Products and Drug Substances, Diagnostic Test Kits, Medical Devices, and Medical Gases).

2. Establish priorities for COVID–19 response under the Voluntary Agreement.

3. Identify tasks that should be completed under the appropriate Sub-Committee.

4. Identify information gaps and areas that merit sharing (both from FEMA to the private sector and vice versa).

*Meetings Closed to the Public:* By default, the DPA requires meetings held to implement a voluntary agreement or plan of action be open to the public.[7] However, attendance may be limited if the Sponsor[8] of the voluntary agreement finds that the matter to be discussed at a meeting falls within the purview of matters described in 5 U.S.C. 552b(c), such as trade secrets and commercial or financial information. The Sponsor of the Voluntary Agreement, the FEMA Administrator, found that these meetings to implement the Voluntary Agreement involved matters which fall within the purview of matters described in 5 U.S.C. 552b(c) and the meetings were therefore closed to the public.

*Meetings Closed to the Public:* By default, the DPA requires meetings held to implement a voluntary agreement or plan of action be open to the public.[9] However, attendance may be limited if the Sponsor[10] of the voluntary agreement finds that the matter to be discussed at a meeting falls within the purview of matters described in 5 U.S.C. 552b(c), such as trade secrets and commercial or financial information.

The Sponsor of the Voluntary Agreement, the FEMA Administrator, found that these meetings to implement the Voluntary Agreement involved matters which fall within the purview of matters described in 5 U.S.C. 552b(c) and the meetings were therefore closed to the public.

Specifically, these meetings may have required participants to disclose trade secrets or commercial or financial information that is privileged or confidential. Disclosure of such information allows for meetings to be closed to the public pursuant to 5 U.S.C. 552b(c)(4).

The success of the Voluntary Agreement depends wholly on the willing participation of the private sector participants. Failure to close these meetings to the public could reduce active participation by the signatories due to a perceived risk that sensitive company information could be prematurely released to the public. A premature public disclosure of a private sector participant's information could reduce trust and support for the Voluntary Agreement.

[1] 50 U.S.C. 4558(c)(1).

[2] 85 FR 18403 (Apr. 1, 2020).

[3] DHS Delegation 09052, Rev. 00.1 (Apr. 1, 2020); DHS Delegation Number 09052 Rev. 00 (Jan. 3, 2017).

[4] 85 FR 50035 (Aug. 17, 2020). The Attorney General, in consultation with the Chairman of the Federal Trade Commission, made the required finding that the purpose of the voluntary agreement may not reasonably be achieved through an agreement having less anticompetitive effects or without any voluntary agreement and published the finding in the **Federal Register** on the same day. 85 FR 50049 (Aug. 17, 2020).

[5] *See* 85 FR 78869 (Dec. 7, 2020). *See also* 85 FR 79020 (Dec. 8, 2020).

[6] *See* 86 FR 27894 (May 24, 2021). *See also* 86 FR 28851 (May 28, 2021).

[7] *See* 50 U.S.C. 4558(h)(7).

[8] ''[T]he individual designated by the President in subsection (c)(2) [of section 708 of the DPA] to administer the voluntary agreement, or plan of action.'' 50 U.S.C. 4558(h)(7).

[9] *See* 50 U.S.C. 4558(h)(7).

[10] ''[T]he individual designated by the President in subsection (c)(2) [of section 708 of the DPA] to administer the voluntary agreement, or plan of action.'' 50 U.S.C. 4558(h)(7).

A resulting loss of support by the participants for the Voluntary Agreement would significantly frustrate the implementation of the Agency's objectives. Thus, these meeting closures are permitted pursuant to 5 U.S.C. 552b(c)(9)(B).

**Deanne Criswell,**

*Administrator, Federal Emergency Management Agency.*

[FR Doc. 2021–22069 Filed 10–7–21; 8:45 am]

**BILLING CODE 9111–19–P**

## DEPARTMENT OF THE INTERIOR

### Geological Survey

**[GX22EB00A181100; OMB Control Number 1028–0085]**

### Agency Information Collection Activities; Submission to the Office of Management and Budget for Review and Approval; National Land Remote Sensing Education, Outreach and Research Activity

**AGENCY:** U.S. Geological Survey, Interior.

**ACTION:** Notice of information collection; request for comment.

**SUMMARY:** In accordance with the Paperwork Reduction Act (PRA) of 1995 we, the U.S. Geological Survey (USGS) are proposing to renew an information collection.

**DATES:** Interested persons are invited to submit comments on or before November 8, 2021.

**ADDRESSES:** Written comments and recommendations for the proposed information collection should be sent within 30 days of publication of this notice to *www.reginfo.gov/public/do/PRAMain.* Find this particular information collection by selecting ''Currently under 30-day Review—Open for Public Comments'' or by using the search function.

Written comments may also be submitted by mail to U.S. Geological Survey, Information Collections Officer, 12201 Sunrise Valley Drive, MS 159, Reston, VA 20192, or by email to *gs-info_collections@usgs.gov.* Please reference OMB Control Number 1028–0085 in the subject line of your mail or email.

**FOR FURTHER INFORMATION CONTACT:** To request additional information about this Information Collection Request (ICR), contact Sarah Cook by email at *scook@usgs.gov* or by telephone at 703–648–6136. You may also view the ICR at *http://www.reginfo.gov/public/do/PRAMain.*

**SUPPLEMENTARY INFORMATION:** In accordance with the PRA and 5 CFR 1320.8(d)(1), we provide the general public and other Federal agencies with an opportunity to comment on new, proposed, revised, and continuing collections of information. This helps us assess the impact of our information collection requirements and minimize the public's reporting burden. It also helps the public understand our information collection requirements and provide the requested data in the desired format.

A **Federal Register** notice with a 60-day public comment period soliciting comments on this collection of information was published on May 18, 2021 (86 FR 26934). No comments were received.

As part of our continuing effort to reduce paperwork and respondent burdens, we are again soliciting comments from the public and other Federal agencies on the proposed ICR that is described below. We are especially interested in public comment addressing the following:

(1) Whether this collection of information is necessary for the proper performance of the functions of the USGS, including whether the information will have practical utility;

(2) Whether your estimate of the burden for this collection of information is accurate

(3) Whether the methodology and assumptions used are valid;

(4) how we might enhance the quality, utility, and clarity of the information to be collected; and

(5) How the USGS might minimize the burden of this collection of information on those asked to respond, including through the use of appropriate automated, electronic, mechanical, or other technological collection techniques or other forms of information technology, *e.g.,* permitting electronic submission of response.

Comments that you submit in response to this notice are a matter of public record. Before including your address, phone number, email address, or other personally identifiable information (PII) in your comment, you should be aware that your entire comment—including your PII—may be made publicly available at any time. While you can ask us in your comment to withhold your PII from public review, we cannot guarantee that we will be able to do so.

*Abstract:* The National Land Remote Sensing Education, Outreach and Research Activity (NLRSEORA) is an effort to develop a U.S. nationwide consortium to build the capability to receive, process, and archive remotely-sensed data for the purpose of providing access to university and state organizations in a ready-to-use format and to expand the science of remote sensing through education, research/applications development, and outreach in areas such as environmental monitoring to include the effects of climate variability on water availability and phenology, natural resource management, and disaster analysis. Respondents are submitting proposals to acquire funding for a national (U.S.) program to promote the uses of space-based land remote-sensing data and technologies through education and outreach at the State and local level and through university-based and collaborative research projects. The information collected will ensure that sufficient and relevant information is available to evaluate and select a proposal for funding. A panel of USGS Core Science Systems Mission Area managers and scientists will review each proposal to evaluate the technical merit, requirements, and priorities identified.

This notice concerns the collection of information that is sufficient and relevant to evaluate and select proposals for funding. We will protect information from respondents considered proprietary under the Freedom of Information Act (5 U.S.C. 552) and its implementing regulations (43 CFR part 2), and under regulations at 30 CFR 250.197, ''Data and information to be made available to the public or for limited inspection.'' Responses are voluntary. No questions of a ''sensitive'' nature are asked. We intend to release the project abstracts and primary investigators for awarded/funded projects only.

*Title of Collection:* National Land Remote Sensing Education, Outreach and Research Activity.

*OMB Control Number:* 1028–0085.

*Form Number:* None.

*Type of Review:* Extension of a currently approved collection.

*Respondents/Affected Public:* Public or private institutions of higher education including universities; State and local governments (including county, city, township or special district governments); independent school districts, Tribal governments or organizations, nonprofit organizations (with or without 501(c)(3) status).

*Total Estimated Number of Annual Respondents:* 5.

*Total Estimated Number of Annual Responses:* 5.

*Estimated Completion Time per Response:* 2 hours.

*Total Estimated Number of Annual Burden Hours:* 10.

*Respondent's Obligation:* Voluntary.

*Frequency of Collection:* Annually.

*Total Estimated Annual Nonhour Burden Cost:* There are no ''non-hour-cost'' burdens associated with this IC.

An agency may not conduct, or sponsor and a person is not required to respond to a collection of information unless it displays a currently valid OMB control number.

The authority for this action is the Paperwork Reduction Act of 1995 (44 U.S.C. 3501 *et seq.*).

**Timothy Newman,**

*Program Coordinator, National Land Imaging Program, U.S. Geological Survey.*

[FR Doc. 2021–22049 Filed 10–7–21; 8:45 am]

**BILLING CODE P**

## DEPARTMENT OF THE INTERIOR

### Bureau of Land Management

**[212.LLAK941200.L14400000. ET0000; AA–82862]**

### Notice of Application for Withdrawal Extension and Opportunity for Public Meeting; Alaska

**AGENCY:** Bureau of Land Management, Interior.

**ACTION:** Notice.

**SUMMARY:** The United States Air Force (USAF) has filed an application with the Bureau of Land Management (BLM) requesting the Secretary of the Interior extend Public Land Order (PLO) No. 7531 for an additional 20-year term. PLO No. 7531 withdrew 1.25 acres of public land from surface entry and mining, but not from mineral leasing laws, for the King Salmon Remediation site and reserved the site for the use by the USAF to protect the King Salmon Remediation Project in King Salmon, Alaska. This Notice advises the public of an opportunity to comment on this application for a withdrawal extension and to request a public meeting.

**DATES:** Comments and requests for a public meeting regarding this withdrawal application must be received by January 6, 2022.

**ADDRESSES:** Comments and public meeting requests should be sent to the Alaska State Director, BLM Alaska State Office, 222 West Seventh Avenue, No. 13, Anchorage, Alaska 99513–7504 or by email at *blm_ak_state_director@blm.gov.*

**FOR FURTHER INFORMATION CONTACT:** Chelsea Kreiner, BLM Alaska State Office, 907–271–4205, email *ckreiner@blm.gov,* or you may contact the BLM office at the address above. Persons who use a telecommunications device for the deaf (TDD) may call the Federal Relay Service (FRS) at 1–800–877–8339 to contact the above individual. The FRS is available 24 hours a day, 7 days a week. You will receive a reply during normal business hours.

**SUPPLEMENTARY INFORMATION:** The withdrawal established by PLO No. 7531 (67 FR 50894, (2002)) will expire August 6, 2022. The USAF has filed an application for the Secretary to extend PLO No. 7531 for an additional 20-year term. The purpose of the withdrawal extension is to continue protection for the King Salmon Remediation Project in King Salmon, Alaska.

A complete description of the land requested, along with all other records pertaining to the extension, can be examined in the BLM Alaska State Office at the address shown above.

Notice is hereby given that an opportunity for a public meeting is afforded in connection with this withdrawal extension. All interested parties who desire a public meeting for the purpose of being heard on this withdrawal extension application must submit a written request to the Alaska State Director, BLM Alaska State Office at the address in the **ADDRESSES** section, within January 6, 2022 of this Notice. Upon determination by the authorized officer that a public meeting will be held, the BLM will publish a notice of the date, time, and place in the **Federal Register** and local newspapers, and will post on the BLM website at *www.blm.gov* at least 30 days before the scheduled date of the meeting.

The withdrawal extension application will be processed in accordance with the regulations set-forth in 43 CFR 2310.4 and subject to Section 810 of the Alaska National Interest Lands Conservation Act, (16 U.S.C. 3120).

Before including your address, phone number, email address, or other personal identifying information in your comment, you should be aware that your entire comment including your personal identifying information may be made publicly available at any time. While you can ask us in your comment to withhold your personal identifying information from public review, we cannot guarantee that we will be able to do so.

(Authority: 43 CFR 2310.4)

**Erika Reed,**

*Acting Alaska State Director.*

[FR Doc. 2021–22010 Filed 10–7–21; 8:45 am]

**BILLING CODE 4310–JA–P**

## DEPARTMENT OF THE INTERIOR

### Bureau of Land Management

**[FF02R05000/FSRS34510200000/AZA–38417]**

### Notice of Proposed Withdrawal and Opportunity for Public Meeting for the Bill Williams River National Wildlife Refuge, Arizona

**AGENCY:** Bureau of Land Management, Interior.

**ACTION:** Notice.

**SUMMARY:** On behalf of the United States Fish and Wildlife Service (FWS) and subject to valid existing rights, the Deputy Secretary of the Interior proposes to withdraw 1,464 acres of public lands from appropriation under the public land laws, including location and entry under the United States mining laws, and 1,134 acres of Federal surface estate public lands from appropriation under the public land laws for 100 years to protect and reserve the land for management as part of the Bill Williams River National Wildlife Refuge (NWR) located in La Paz and Mohave Counties, Arizona. Publication of this notice temporarily segregates the lands for up to two-years and announces to the public an opportunity to comment and request a public meeting on the proposed withdrawal.

**DATES:** Comments and requests for a public meeting must be received by January 6, 2022.

**ADDRESSES:** All comments and meeting requests should be sent to the Bureau of Land Management (BLM) Arizona State Office, 1 North Central Avenue, Suite 800, Phoenix, AZ 85004; faxed to (602) 417–9452; or sent by email to *BLM_AZ_Withdrawal_Comments@blm.gov.* The BLM will not consider comments via telephone calls.

**FOR FURTHER INFORMATION CONTACT:** Mike Ouellett, Realty Specialist, BLM Arizona State Office, telephone: (602) 417–9561, email at *mouellett@blm.gov;* or you may contact the BLM office at the address noted above. Persons who use a telecommunications device for the deaf (TDD) may call the Federal Relay Service (FRS) at 1–800–877–8339 to contact the above individual during normal business hours. The FRS is available 24 hours a day, 7 days a week, to leave a message or question. You will receive a reply during normal business hours.

**SUPPLEMENTARY INFORMATION:** The applicant is the FWS, and its petition/application requests the Deputy Secretary of the Interior withdraw the following described public lands from

all forms of appropriation under the public land laws, including location and entry under the United States mining laws, subject to valid existing rights, and reserve them for wildlife refuge purposes for a 100-year term.

**Gila and Salt River Meridian, Arizona**

*(Surface and Subsurface Estate Land)*

T. 11 N., R. 17 W.,
Sec. 20, E½, E½NW¼, NE¼SW¼, S½SW¼;
Sec. 25, S½SE¼;
Sec. 26, SE¼SW¼, S½SE¼;
Sec. 28, N½, N½SW¼, SE¼SW¼, SE¼SE¼;
Sec. 34, N½NE¼, SE¼NE¼, N½NW¼;
Sec. 36, N½SE¼NE¼.
T. 11 N., R. 18 W.,
Sec. 12, SW¼SW¼ that portion lying northerly of the Havasu Lake National Wildlife Refuge boundary, as described in Executive Order 8647 of January 22, 1941, and southwesterly of the southwesterly right-of-way line of State Highway 95;
Sec. 24, NE¼NE¼.

The areas described aggregate approximately 1464 acres.

The petition/application further requests that the Deputy Secretary of the Interior withdraw the following described public lands (surface estate only) from all forms of appropriation under the public land laws, subject to valid existing rights, and reserve them for wildlife refuge purposes for a 100-year term:

**Gila and Salt River Meridian, Arizona**

(Surface Estate Land)
T. 11 N., R. 17 W.,
Sec. 19, lot 2, NE¼SW¼, S½SE¼;
Sec. 21, SW¼SW¼;
Sec. 25, S½SW¼;
Sec. 27, SW¼NE¼, S½NW¼;
Sec. 29, E½NW¼;
Sec. 33, S½NE¼, SE¼NW¼;
Sec. 35, N½NE¼, S½NE¼SW¼, NW¼SW¼, S½NW¼SE¼.
T. 11 N., R. 18 W.,
Sec. 11, those portions of the SW¼NE¼, W½NW¼, SE¼NW¼, NE¼SW¼, N½NW¼SW¼, N½SE¼SW¼, NE¼SE¼, W½SE¼, SE¼SE¼ lying northerly of the Havasu Lake National Wildlife boundary, as described in Executive Order 8647 of January 22,1941, and southerly of the southwesterly right-of-way line of State Route 95.
Sec. 13, those portions of the W½NE¼SW¼, NW¼SW¼, SE¼SW¼, S½SW¼SE¼, SW¼SE¼SE¼ lying southerly of the Havasu Lake National Wildlife boundary, as described in Executive Order 8647 of January 22, 1941.

The areas described aggregate approximately 1,134 acres.

The Deputy Secretary of the Interior approved the FWS's petition. Therefore, the petition/application constitutes a withdrawal proposal of the Secretary of the Interior (43 CFR 2310.1–3(e)).

The use of a right-of-way, interagency agreement, or cooperative agreement would not provide adequate protection of the wildlife refuge.

No additional water rights will fulfill the purpose of this new withdrawal.

There are no suitable alternative sites since these lands are located within the Bill Williams River NWR.

Before including your address, phone number, email address, or other personal identifying information in your comment, you should be aware that your entire comment, including your personal identifying information, may be made publicly available at any time. While you can ask us in your comment to withhold your personal identifying information from public review, we cannot guarantee that we will be able to do so.

Notice is hereby given that an opportunity for a public meeting is afforded in connection with the proposed withdrawal. All interested persons who desire a public meeting for the purpose of being heard on the proposed withdrawal must submit a written request to the BLM Arizona State Director no later than January 6, 2022. If the authorized officer determines that a public meeting will be held, a notice of the time and place will be published in the **Federal Register** and a local newspaper at least 30 days before the scheduled date of the meeting.

For a period until October 9, 2023 the lands described above will be segregated from all forms of appropriation under the public land laws, unless the application is denied or canceled, or the withdrawal is approved prior to that date. This application will be processed in accordance with the regulations set-forth in 43 CFR part 2300.

**Raymond Suazo,**

*State Director.*

[FR Doc. 2021–22039 Filed 10–7–21; 8:45 am]

**BILLING CODE 4333–15–P**

## DEPARTMENT OF THE INTERIOR

### Office of Natural Resources Revenue

**[Docket No. ONRR–2011–0025; DS63644000 DRT000000.CH7000 223D1113RT, OMB Control Number 1012–0003]**

### Agency Information Collection Activities; Delegated and Cooperative Activities With States and Indian Tribes

**AGENCY:** Office of Natural Resources Revenue (''ONRR''), Interior.

**ACTION:** Notice of information collection; request for comment.

**SUMMARY:** In accordance with the Paperwork Reduction Act of 1995 (''PRA''), ONRR is proposing to renew an information collection. Currently, the information collection is authorized by the Office of Management and Budget (''OMB'') under OMB Control Number 1012–0003, which expires on December 31, 2021. Through this Information Collection Request (''ICR''), ONRR seeks renewed authority to collect information to review and approve a delegation proposal from a State that is seeking to perform royalty management functions and to prepare a cooperative agreement with a State or Indian Tribe seeking to perform royalty audits and investigations.

**DATES:** Interested persons are invited to submit comments on or before November 8, 2021.

**ADDRESSES:** All comment submissions must (1) reference ''OMB Control Number 1012–0003'' in the subject line; (2) be sent to ONRR before the close of the comment period listed under **DATES**; and (3) be sent through one of the following two methods:

- *Electronically via the Federal eRulemaking Portal:* Please visit *https://www.regulations.gov.* In the Search Box, enter the Docket ID Number for this ICR renewal (''ONRR–2011–0025'') to locate the document and click the ''Comment Now!'' button. Follow the prompts to submit your comment prior to the close of the comment period.
- *Email Submissions:* Please email your comments to *ONRR_RegulationsMailbox@onrr.gov* with the OMB Control Number (''OMB Control Number 1012–0003'') listed in the subject line of your email. Email submissions must be postmarked on or before the close of the comment period.

*Docket:* To access the docket to view ICR publications in the **Federal Register**, go to *https://www.regulations.gov* and search ''ONRR–2011–0025''. The docket will display renewal notices recently published in the **Federal Register**, publications associated with prior renewals, and applicable public comments received for this ICR.

*OMB ICR Data:* OMB also maintains information on ICR renewals and approvals. You may access this information at *https://www.reginfo.gov/public/do/PRASearch.* Under the ''OMB Control Number'' heading enter ''1012–0003'' and click the ''Search'' button located at the bottom of the page. To view the ICR renewal or OMB approval status, click on the latest entry (based on

the most recent date). On the ''View ICR—OIRA Conclusion'' page, check the box next to ''All'' to display all available ICR information provided by OMB.

**FOR FURTHER INFORMATION CONTACT:** To request additional information about this ICR, please contact Mr. Peter Hanley, State and Tribal Royalty Audit Committee, ONRR, by telephone at (303) 231–3721 or by email to *Peter.Hanley@onrr.gov.* Individuals who are hearing or speech impaired may call the Federal Relay Service at 1–800–877–8339 for TTY assistance.

**SUPPLEMENTARY INFORMATION:** Pursuant to the PRA, 44 U.S.C. 3501, *et seq.,* and 5 CFR 1320.5, all information collections, as defined in 5 CFR 1320.3, require approval by OMB. ONRR may not conduct or sponsor, and you are not required to respond to, a collection of information unless it displays a currently valid OMB control number.

As part of ONRR's continuing effort to reduce paperwork and respondent burdens, ONRR is inviting the public and other Federal agencies to comment on new, proposed, revised, and continuing collections of information in accordance with the PRA and 5 CFR 1320.8(d)(1). This helps ONRR to assess the impact of its information collection requirements and minimize the public's reporting burden. It also helps the public understand ONRR's information collection requirements and provide the requested data in the desired format.

ONRR is especially interested in public comments addressing the following:

(1) Whether the collection of information is necessary for the proper performance of the functions of the agency, including whether the information will have practical utility;

(2) The accuracy of ONRR's estimate of the burden for this collection of information, including the validity of the methodology and assumptions used;

(3) Ways to enhance the quality, utility, and clarity of the information to be collected; and

(4) How might the agency minimize the burden of the collection of information on those who are to respond, including through the use of appropriate automated, electronic, mechanical, or other technological collection techniques or other forms of information technology, *e.g.,* permitting electronic submission of response.

ONRR published a notice, with a 60-day public comment period soliciting comments on this collection of information, in the **Federal Register** on April 16, 2021 (86 FR 20194). ONRR received one comment in response to its 60-Day Notice for this ICR. The commenter generally agreed with ONRR's collection of information under this ICR.

Comments that you submit in response to this 30-Day Notice are a matter of public record. ONRR will include or summarize each comment in its request to OMB to approve this ICR. Before including your address, phone number, email address, or other personal identifying information in your comment, you should be aware that your entire comment—including your personal identifying information—may be made publicly available at any time. While you can ask ONRR in your comment to withhold your personal identifying information from public review, ONRR cannot guarantee that it will be able to do so.

*Abstract: (a) General Information:* For the benefit of all Americans, ONRR collects, accounts for, and verifies natural resource and energy revenues due to States, American Indians, and the U.S. Treasury. *See* U.S. Department of the Interior Departmental Manual, 112 DM 34.3 (Sept. 9, 2020). ONRR's various functions include working in partnership with Indian Tribes and States to conduct audits and reviews. *Id.* at 34.4(D). For this purpose, ONRR enters into cooperative agreements with States and Indian Tribes that seek to perform royalty audits pursuant to 30 U.S.C. 196 and 1732, and reviews and approves delegation proposals from States that seek to perform royalty management functions pursuant to 30 U.S.C. 196 and 1735.

*(b) Information Collections:* This ICR covers the paperwork requirements under 30 CFR parts 1227, 1228, and 1229. This collection of information is necessary in order for ONRR to approve States and Indian Tribes to conduct audits and related investigations of Federal and Indian oil, gas, coal, other solid minerals, and geothermal royalty revenues from Federal and Tribal leased lands. ONRR uses the information collected to: (1) review and approve a delegation proposal from a State seeking to perform royalty management functions, and (2) prepare a cooperative agreement with a State or Indian Tribe seeking to perform royalty audits. The requirements of 30 CFR parts 1227, 1228, and 1229 are:

(1) 30 CFR part 1227—Delegation to States. Part 1227 governs the delegation of certain Federal royalty management functions to a State under 30 U.S.C. 1735, for Federal oil and gas leases covering Federal lands within the State. This part also governs the delegation of audit and investigative functions to a State for Federal geothermal leases or solid mineral leases covering Federal lands within the State (30 U.S.C. 196), or leases covering lands offshore of the State subject to section 8(g) of the OCSLA (43 U.S.C. 1337(g)). To be considered for such delegation, a State must submit a written proposal to ONRR, which ONRR must approve. Following the delegation process, 30 CFR part 1227 outlines State responsibilities, compensation, performance reviews, and the process for terminating a delegation.

(2) 30 CFR part 1228—Cooperative Activities with States and Indian Tribes. FOGRMA (30 U.S.C. 1732) authorizes the Secretary of the Interior (''Secretary'') to enter into a cooperative agreement with a State or Indian Tribe to share oil and gas royalty management information, and to carry out inspection, audit, investigation, and enforcement activities on Federal and Indian lands. Federal regulations, at 30 CFR part 1228, implement this provision and set forth the requirements and procedures for entering into a cooperative agreement, the terms of such agreement, and subsequent responsibilities that must be carried out under the cooperative agreement. To enter into a cooperative agreement, a State or Indian Tribe must submit a written proposal to ONRR. The proposal must outline the activities that the State or Indian Tribe will undertake and must present evidence that the State or Indian Tribe can meet the standards of the Secretary to conduct these activities. The State or Indian Tribe also must submit an annual work plan and budget, as well as quarterly reimbursement vouchers.

(3) 30 CFR part 1229—Delegation to States. Part 1229 governs delegations to a State to conduct audits and related investigations for Federal lands within the State, and for Indian lands for which the State has received permission from the respective Indian Tribe or allottees to carry out audit activities delegated to the State under 30 U.S.C. 1735. 30 CFR 1229.4. Under Part 1229, the State must receive the Secretary's delegation of authority and submit annual audit work plans detailing its audits and related investigations, annual budgets, and quarterly reimbursement vouchers. The State also must maintain records.

*Title of Collection:* 30 CFR parts 1227, 1228, and 1229, Delegated and Cooperative Activities with States and Indian Tribes.

*OMB Control Number:* 1012–0003.

*Form Numbers:* None.

*Type of Review:* Renewal of a currently approved collection.

*Respondents/Affected Public:* States and Indian Tribes.

*Total Estimated Number of Annual Respondents:* 9 States and 6 Indian respondents.

*Total Estimated Number of Annual Responses:* 210.

*Estimated Completion Time per Response:* 75.50 hrs.

*Total Estimated Number of Annual Burden Hours:* 16,697 hours.

*Respondent's Obligation:* Required to obtain or retain benefit.

*Frequency of Collection:* Based on the functions performed, responses are monthly, quarterly, annually, on occasion, and varied.

*Total Estimated Annual Non-Hour Burden Cost:* ONRR identified no ''non-hour cost'' burden associated with this collection of information.

An agency may not conduct or sponsor, and a person is not required to respond to, a collection of information unless it displays a currently valid OMB control number.

The authority for this action is the PRA (44 U.S.C. 3501, *et seq.*).

**Kimbra G. Davis,**

*Director, Office of Natural Resources Revenue.*

[FR Doc. 2021–21894 Filed 10–7–21; 8:45 am]

**BILLING CODE 4335–30–P**

## INTERNATIONAL TRADE COMMISSION

**[Investigation No. 337–TA–1186]**

## Certain Balanced Armature Devices, Products Containing Same, and Components Thereof; Notice of a Commission Determination Finding a Violation of Section 337; Issuance of a General Exclusion Order and Cease and Desist Orders; Termination of the Investigation

**AGENCY:** U.S. International Trade Commission.

**ACTION:** Notice.

**SUMMARY:** Notice is hereby given that the U.S. International Trade Commission has determined to affirm, on modified grounds, a summary determination (''ID'') (Order No. 50) of the presiding administrative law judge (''ALJ'') finding a violation of section 337. The Commission has determined that the appropriate remedy is a general exclusion order (''GEO'') and cease and desists orders (''CDO'') to certain respondents. The Commission terminates the investigation.

**FOR FURTHER INFORMATION CONTACT:** Amanda Pitcher Fisherow, Esq., Office of the General Counsel, U.S. International Trade Commission, 500 E Street SW, Washington, DC 20436, telephone (202) 205–2737. Copies of non-confidential documents filed in connection with this investigation may be viewed on the Commission's electronic docket (EDIS) at *https://edis.usitc.gov.* For help accessing EDIS, please email *EDIS3Help@usitc.gov.* General information concerning the Commission may also be obtained by accessing its internet server at *https://www.usitc.gov.* Hearing-impaired persons are advised that information on this matter can be obtained by contacting the Commission's TDD terminal on (202) 205–1810.

**SUPPLEMENTARY INFORMATION:** On November 29, 2019, the Commission instituted this investigation based on a complaint filed by Knowles Corporation and Knowles Electronics, LLC of Itasca, Illinois, and Knowles Electronics (Suzhou) Co., Ltd. of Suzhou, China (collectively, ''Knowles''). 84 FR 65840 (Nov. 29, 2019). The complaint, as supplemented, alleged violations of section 337 of the Tariff Act of 1930, as amended, 19 U.S.C. 1337, due to the importation into the United States, sale for importation, or sale in the United States after importation of certain balanced armature devices, products containing same, and components thereof by reason of misappropriation of trade secrets, the threat or effect of which is to destroy or substantially injure a domestic industry. *Id.* The notice of investigation named twelve (12) respondents, including Shenzhen Bellsing Acoustic Technology Co. Ltd. of Shenzhen, China, Suzhou Bellsing Acoustic Technology Co. Ltd. of Suzhou, China, Dongguan Bellsing Precision Device Co., Ltd. of Dongguan, China, and Bellsing Corporation of Lisle, Illinois (collectively, ''Bellsing''); Liang Li (a/k/a Ryan Li) of Suzhou City, China (''Mr. Li''); Dongguan Xinyao Electronics Industrial Co., Ltd. of Dongguan, China (''Xinyao''); Soundlink Co., Ltd. of Suzhou, China (''Soundlink''); Magnatone Hearing Aid Corporation d/b/a Persona Medical and lnEarz Audio of Casselberry, Florida (''Persona''); Jerry Harvey Audio LLC of Orlando, Florida (''Harvey''); Magic Dynamics, LLC d/b/a MagicEar of Clearwater, Florida (''MagicEar''); Campfire Audio, LLC of Portland, Oregon (''Campfire''); and Clear Tune Monitors, Inc. of Orlando, Florida (''Clear Tune''). *Id.* The Office of Unfair Import Investigations (''OUII'') is also a party in this investigation. *Id.*

Xinyao, Soundlink, MagicEar, CampFire, Persona, Clear Tune, and Harvey were all terminated from the investigation based on the issuance of consent orders. *See* Order Nos. 37–40, *unreviewed by* Comm'n Notice (Nov. 23, 2020); Order Nos. 34–35, *unreviewed by* Comm'n Notice (Nov. 19, 2020); and Order No. 28, *unreviewed by* Comm'n Notice (Sept. 20, 2020).

On January 14, 2021, the presiding ALJ issued an ID (Order No. 46), granting-in-part and denying-in-part Knowles' motion for sanctions (''Sanctions ID''). As to Bellsing, the Sanctions ID found that Bellsing failed to disclose spoliation of evidence, that its failure to do so was in bad faith, and that the appropriate sanction was default. Sanctions ID at 18–46. The Sanctions ID denied Knowles' motion as to Mr. Li, and denied Knowles' request for monetary sanctions. *Id.* at 17–18, 46–47. No one petitioned for review of the Sanctions ID. Nevertheless, on February 16, 2021, the Commission determined to review the Sanctions ID in its entirety. Comm'n Notice (Feb. 16, 2021). On March 17, 2021, the Commission issued its final determination on the Sanctions ID, affirming the Sanctions ID, with modification, finding Bellsing in default. Sanctions ID at 47 (Jan. 14, 2021), *aff'd with modification,* Comm'n Notice (Mar. 17, 2020).

On June 1, 2021, the ALJ issued the subject ID. On June 11, 2021, Bellsing and Mr. Li filed a joint petition for review. On June 21, 2021, OUII and Knowles filed responses.

On August 2, 2021, the Commission determined to review the ID in part. Specifically, the Commission determined to review (1) whether Bellsing can participate in briefing on remedy and bonding before the ALJ (ID at 4) and in briefing on remedy, the public interest, and bonding before the Commission notwithstanding its default; (2) importation; (3) use by Mr. Li of Representative Trade Secret Nos. (''RTS'') 1–10 (ID at 35–36, 41–42, 49, 56–57, 61, 72–73, and 84–85); (4) all findings related to RTS No. 6; and (5) domestic industry. 86 FR 43270 (Aug 6, 2021). The Commission also reviewed the issues raised in the parties' arguments relating to due process, comity, and collateral estoppel. *Id.* at 43270–71. The Commission requested briefing on the issues under review, remedy, bonding, and the public interest. *Id.* at 43271. On August 16, 2021, Respondents, Knowles, and OUII each filed their initial responses to the Commission's notice of review. On August 23, 2021, Respondents, Knowles, and OUII each filed their replies.

Having considered the record, including the ID, the ALJ's recommended determination on remedy and bonding, and the parties' submissions, the Commission has

determined that a violation has occurred as to Mr. Li. Bellsing had previously been found in default, and the Commission finds a violation has occurred as to Bellsing. Specifically, the Commission finds that (1) Mr. Li has met the importation requirement on modified grounds, and affirms the ID's remaining findings on importation; (2) Mr. Li has used and/or disclosed each of RTS Nos. 1–10; (3) RTS No. 6 has been misappropriated; and (4) affirms the IDs findings on domestic industry. All findings in the ID that are not inconsistent with the Commission's determination are affirmed.

Accordingly, the Commission finds that there is a violation of section 337. The Commission has determined that the appropriate remedy is a GEO and CDOs directed to each of the Bellsing respondents and Mr. Li. These orders bar Bellsing and Mr. Li's unfair acts for a duration of twenty-six (26) years. The Commission has also determined that the public interest factors enumerated in subsections 337(d)(1) and (f)(1) (19 U.S.C. 1337(d)(1), (f)(1)) do not preclude the issuance of the GEO and CDOs. The GEO is directed to covered products that are made by, for, or on behalf of Bellsing and/or Mr. Li. The GEO reaches downstream products incorporating the covered products. The GEO includes a provision requiring any importer seeking to import the covered products (or products containing them or the components thereof) manufactured by or for Bellsing and/or Mr. Li or their affiliates or successors, to obtain a ruling from the Commission prior to the importation of the articles, finding that they are not subject to the GEO. The Commission has set the bond at one hundred percent (100%) of the value of the entered products imported by or on behalf of Bellsing and/or Mr. Li and sets a zero percent (0%) bond (*i.e.,* no bond) for downstream products or components thereof. The investigation is terminated.

The Commission's orders and opinion were delivered to the President and to the United States Trade Representative on the day of their issuance.

The Commission vote for this determination took place on October 4, 2021.

The authority for the Commission's determination is contained in section 337 of the Tariff Act of 1930, as amended (19 U.S.C. 1337), and in Part 210 of the Commission's Rules of Practice and Procedure (19 CFR part 210).

By order of the Commission.

Issued: October 4, 2021.

**Lisa Barton,**

*Secretary to the Commission.*

[FR Doc. 2021–21998 Filed 10–7–21; 8:45 am]

**BILLING CODE 7020–02–P**

## INTERNATIONAL TRADE COMMISSION

### Notice of Receipt of Complaint; Solicitation of Comments Relating to the Public Interest

**AGENCY:** U.S. International Trade Commission.

**ACTION:** Notice.

**SUMMARY:** Notice is hereby given that the U.S. International Trade Commission has received a complaint entitled *Certain Oil-Vaping Cartridges, Components Thereof, and Products Containing the Same, DN 3571;* the Commission is soliciting comments on any public interest issues raised by the complaint or complainant's filing pursuant to the Commission's Rules of Practice and Procedure.

**FOR FURTHER INFORMATION CONTACT:** Lisa R. Barton, Secretary to the Commission, U.S. International Trade Commission, 500 E Street SW, Washington, DC 20436, telephone (202) 205–2000. The public version of the complaint can be accessed on the Commission's Electronic Document Information System (EDIS) at *https://edis.usitc.gov.* For help accessing EDIS, please email *EDIS3Help@usitc.gov.*

General information concerning the Commission may also be obtained by accessing its internet server at United States International Trade Commission (USITC) at *https://www.usitc.gov*. The public record for this investigation may be viewed on the Commission's Electronic Document Information System (EDIS) at *https://edis.usitc.gov.* Hearing-impaired persons are advised that information on this matter can be obtained by contacting the Commission's TDD terminal on (202) 205–1810.

**SUPPLEMENTARY INFORMATION:** The Commission has received a complaint and a submission pursuant to § 210.8(b) of the Commission's Rules of Practice and Procedure filed on behalf of Shenzhen Smoore Technology Limited, on October 4, 2021. The complaint alleges violations of section 337 of the Tariff Act of 1930 (19 U.S.C. 1337) in the importation into the United States, the sale for importation, and the sale within the United States after importation of certain oil-vaping cartridges, components thereof, and products containing the same. The complainant names as respondents: BBTank USA, LLC of Lambertville, MI; Glo Extracts of Los Angeles, CA; *BulkCarts.com* of Canton, MI; Greenwave Naturals LLC of Austin, TX; *BoldCarts.com* of Tempe, AZ; Bold Crafts, Inc. of Irvine, CA; Blinc Group Holdings, LLC of New York, NY; Jonathan Ray Carfield d/b/a AlderEgo Wholesale, AlderEgo Holdings, Inc. and AlderEgo Group Limited a/k/a AVID Holding Limited of China; Hanna Carfield of Tacoma, WA; Next Level Ventures, LLC of Seattle, WA; Advanced Vapor Devices, LLC of Los Angeles, CA; *avd710.com* of Seattle, WA; AlderEgo Group Limited (''AEG'') of Hong Kong; A & A Global Imports, Inc. d/b/a Marijuana Packaging of Vernon, CA; Bulk Natural, LLC d/b/a True Terpenes of Portland, OR; Brand King, LLC of Sacramento, CA; ZTCSMOKE USA Inc. of Niceville, FL; *headcandysmokeshop.com* of Canada; Head Candy Enterprise Ltd. of Canada; Green Tank Technologies Corp of Canada; Cannary Packaging Inc. of Canada; Cannary LA of Signal Hill, CA; *dcalchemy.com* of Phoenix, AZ; DC Alchemy, LLC of Phoenix AZ; *Cartridgesforsale.com* of Ypsilanti, MI; HW Supply, LLC of Ypsilanti, MI; International Vapor Group, LLC of Miami, FL; Obisidian Supply, Inc. of Irvine, CA; *Ygreeninc.com* of Walnut, CA; Ygreen Inc. of Walnut, CA; Atmos Nation LLC of Davie, FL; *shopbvv.com* of Naperville, IL; Best Value Vacs, LLC of Naperville, IL; *Royalsupplywholesale.com* of San Francisco, CA; *Customcanabisbranding.com* of San Francisco, CA; CLK Global, Inc. of San Francisco, CA; *iKrusher.com* of Arcadia, CA; and The Calico Group Inc. of Austin, TX. The complainant requests that the Commission issue a limited exclusion order, cease and desist orders, and impose a bond upon respondents alleged infringing articles during the 60-day Presidential review period pursuant to 19 U.S.C. 1337(j).

Proposed respondents, other interested parties, and members of the public are invited to file comments on any public interest issues raised by the complaint or § 210.8(b) filing. Comments should address whether issuance of the relief specifically requested by the complainant in this investigation would affect the public health and welfare in the United States, competitive conditions in the United States economy, the production of like or directly competitive articles in the United States, or United States consumers.

In particular, the Commission is interested in comments that:

(i) Explain how the articles potentially subject to the requested remedial orders are used in the United States;

(ii) identify any public health, safety, or welfare concerns in the United States relating to the requested remedial orders;

(iii) identify like or directly competitive articles that complainant, its licensees, or third parties make in the United States which could replace the subject articles if they were to be excluded;

(iv) indicate whether complainant, complainant's licensees, and/or third party suppliers have the capacity to replace the volume of articles potentially subject to the requested exclusion order and/or a cease and desist order within a commercially reasonable time; and

(v) explain how the requested remedial orders would impact United States consumers.

Written submissions on the public interest must be filed no later than by close of business, eight calendar days after the date of publication of this notice in the **Federal Register**. There will be further opportunities for comment on the public interest after the issuance of any final initial determination in this investigation. Any written submissions on other issues must also be filed by no later than the close of business, eight calendar days after publication of this notice in the **Federal Register**. Complainant may file replies to any written submissions no later than three calendar days after the date on which any initial submissions were due. No other submissions will be accepted, unless requested by the Commission. Any submissions and replies filed in response to this Notice are limited to five (5) pages in length, inclusive of attachments.

Persons filing written submissions must file the original document electronically on or before the deadlines stated above. Submissions should refer to the docket number (''Docket No. 3571'') in a prominent place on the cover page and/or the first page. (*See* Handbook for Electronic Filing Procedures, Electronic Filing Procedures [1]). Please note the Secretary's Office will accept only electronic filings during this time. Filings must be made through the Commission's Electronic Document Information System (EDIS, *https://edis.usitc.gov.*) No in-person paper-based filings or paper copies of any electronic filings will be accepted until further notice. Persons with questions regarding filing should contact the Secretary at *EDIS3Help@usitc.gov.*

Any person desiring to submit a document to the Commission in confidence must request confidential treatment. All such requests should be directed to the Secretary to the Commission and must include a full statement of the reasons why the Commission should grant such treatment. *See* 19 CFR 201.6. Documents for which confidential treatment by the Commission is properly sought will be treated accordingly. All information, including confidential business information and documents for which confidential treatment is properly sought, submitted to the Commission for purposes of this Investigation may be disclosed to and used: (i) By the Commission, its employees and Offices, and contract personnel (a) for developing or maintaining the records of this or a related proceeding, or (b) in internal investigations, audits, reviews, and evaluations relating to the programs, personnel, and operations of the Commission including under 5 U.S.C. Appendix 3; or (ii) by U.S. government employees and contract personnel,[2] solely for cybersecurity purposes. All nonconfidential written submissions will be available for public inspection at the Office of the Secretary and on EDIS.[3]

This action is taken under the authority of section 337 of the Tariff Act of 1930, as amended (19 U.S.C. 1337), and of §§ 201.10 and 210.8(c) of the Commission's Rules of Practice and Procedure (19 CFR 201.10, 210.8(c)).

By order of the Commission.

Issued: October 5, 2021.

**Lisa Barton,**

*Secretary to the Commission.*

[FR Doc. 2021–22034 Filed 10–7–21; 8:45 am]

**BILLING CODE 7020–02–P**

[1] Handbook for Electronic Filing Procedures: *https://www.usitc.gov/documents/handbook_on_filing_procedures.pdf.*

[2] All contract personnel will sign appropriate nondisclosure agreements.

[3] Electronic Document Information System (EDIS): *https://edis.usitc.gov.*

## DEPARTMENT OF JUSTICE

### Notice of Lodging of Proposed Consent Decree Under the Oil Pollution Act

On October 4, 2021, the Department of Justice lodged a proposed Consent Decree with the United States District Court for the Eastern District of Louisiana in *United States and State of Louisiana* v. *American Commercial Barge Line LLC,* Civil Case No. 2:21–cv–01818 (E.D. La.).

The United States is acting at the request of the designated federal trustees: National Oceanic and Atmospheric Administration and the United States Department of the Interior through the United States Fish and Wildlife Service. The State of Louisiana is acting through its designated State trustees: The Louisiana Oil Spill Coordinator's Office, Department of Public Safety & Corrections, Louisiana Department of Natural Resources, Louisiana Department of Environmental Quality, Louisiana Department of Wildlife and Fisheries, and the Coastal Protection and Restoration Authority.

The Complaint in this natural resource damages case was filed against Defendant American Commercial Barge Line LLC (''ACBL'') concurrently with the lodging of the proposed Consent Decree. This is a civil action for recovery of damages for injury to, destruction of, loss of, or loss of use of natural resources, under Section 1002 of the Oil Pollution Act (''OPA''), 33 U.S.C. 2702, and Section 2480 of the Louisiana Oil Spill Prevention and Response Act (''OSPRA''), La. Rev. Stat. 30:2480. The United States and the State of Louisiana seek damages in order to compensate for and restore natural resources injured by ACBL's oil discharge from its Barge DM–932 into the Mississippi River on or about July 23, 2008. The United States and the State also seek to recover unreimbursed costs of assessing such injuries and planning for restoration.

Under the proposed Consent Decree, ACBL will pay $2,071,212 to the trustees to restore, replace, or acquire the equivalent of the natural resources allegedly injured, destroyed, or lost as a result of the oil spill. ACBL also will effect the transfer of title and preservation of approximately 649.1 acres of forested woodland habitat in Plaquemines Parish, Louisiana near the English Turn of the Mississippi River. ACBL has already paid $1,320,961.72 to the trustees for past assessment and restoration planning costs.

The publication of this notice opens a period for public comment on the proposed Consent Decree. Comments should be addressed to the Assistant Attorney General, Environment and Natural Resources Division, and should refer to *United States and State of Louisiana* v. *American Commercial Barge Line LLC,* DJ# 90–5–1–1–10875/1, Civil Case No. 2:21–cv–01818 (E.D. La.). All comments must be submitted no later than thirty (30) days after the publication date of this notice. Comments may be submitted either by email or by mail:

| To submit comments: | Send them to: |
|---|---|
| By email ..... | pubcomment-ees.enrd@usdoj.gov. |
| By mail ..... | Assistant Attorney General, U.S. DOJ—ENRD, P.O. Box 7611, Washington, DC 20044–7611. |

During the public comment period, the proposed Consent Decree may be examined and downloaded at this Justice Department website: *https://www.justice.gov/enrd/consent-decrees.* We will provide a paper copy of the Consent Decree upon written request and payment of reproduction costs. Please mail your request and payment to: Consent Decree Library, U.S. DOJ—ENRD, P.O. Box 7611, Washington, DC 20044–7611.

Please enclose a check or money order for $40.25 (25 cents per page reproduction cost) payable to the United States Treasury.

**Thomas Carroll,**

*Assistant Section Chief, Environmental Enforcement Section, Environment and Natural Resources Division.*

[FR Doc. 2021–22059 Filed 10–7–21; 8:45 am]

**BILLING CODE 4410–15–P**

## DEPARTMENT OF LABOR

**[Docket Number DOL–2021–0003]**

## Efforts by Certain Foreign Countries To Eliminate the Worst Forms of Child Labor; Child Labor, Forced Labor, and Forced or Indentured Child Labor in the Production of Goods in Foreign Countries; and Business Practices To Reduce the Likelihood of Forced Labor or Child Labor in the Production of Goods

**AGENCY:** The Bureau of International Labor Affairs, United States Department of Labor.

**ACTION:** Notice: Request for information and invitation to comment.

**SUMMARY:** This notice is a request for information and/or comment on three reports issued by the Bureau of International Labor Affairs (ILAB) regarding child labor and forced labor in certain foreign countries. Relevant information submitted by the public will be used by the Department of Labor (DOL) in preparing its ongoing reporting as required under Congressional mandates and a Presidential directive.

**DATES:** Submitters of information are requested to provide their submission to DOL's Office of Child Labor, Forced Labor, and Human Trafficking (OCFT) at the email or physical address below by 5:00 p.m. January 15, 2022.

*To Submit Information:* Information should be submitted directly to OCFT, Bureau of International Labor Affairs, U.S. Department of Labor. Comments, identified as Docket No. DOL–2021–xxxx, may be submitted by any of the following methods:

*Federal eRulemaking Portal:* The portal includes instructions for submitting comments. Parties submitting responses electronically are encouraged not to submit paper copies.

*Facsimile* (fax): OCFT at 202–693–4830.

*Mail, Express Delivery, Hand Delivery, and Messenger Service (1 copy):* Matthew Fraterman, U.S. Department of Labor, OCFT, Bureau of International Labor Affairs, 200 Constitution Avenue NW, Room S–5315, Washington, DC 20210.

*Email:* Email submissions should be addressed to Matthew Fraterman (*Fraterman.matthew@dol.gov*).

DOL requests that electronic submissions through the Portal or by email be accessible using assistive technologies such as a screen reader, *i.e.,* Job Aid with Speech (JAWS), Non-Visual Display Access (NVDA), ZoomText, to name a few, and be navigable using other means such as a Keyboard or voice commands. Such accessible document formats include Microsoft Word or equivalent and Portable Document Format with OCR. Submissions using these formats facilitate DOL's compliance with Section 508 of the Rehabilitation Act of 1973 (29 U.S.C. 794d), as amended.

**FOR FURTHER INFORMATION CONTACT:** Matthew Fraterman. Please see contact information above.

**SUPPLEMENTARY INFORMATION:** The 2020 Findings on the Worst Forms of Child Labor report (TDA report), published on September 29, 2021, assesses efforts of 131 countries to eliminate the worst forms of child labor in 2020 and assesses whether countries made significant, moderate, minimal, or no advancement during that year. It also suggests actions foreign countries can take to eliminate the worst forms of child labor through legislation, enforcement, coordination, policies, and social programs. The 2020 edition of the List of Goods Produced by Child Labor or Forced Labor (TVPRA List), published on September 30, 2020, and updated on June 23, 2021, makes available to the public a list of goods from countries that ILAB has reason to believe are produced by child labor or forced labor in violation of international standards. Finally, the List of Products Produced by Forced or Indentured Child Labor (E.O. List), most recently updated on March 25, 2019, provides a list of products, identified by country of origin, that DOL, in consultation and cooperation with the Departments of State (DOS) and Homeland Security (DHS), has a reasonable basis to believe might have been mined, produced, or manufactured with forced or indentured child labor. Relevant information submitted by the public will be used by DOL in preparing the next edition of the TDA report, to be published in 2022; the next edition of the TVPRA List, which will also be published in 2022; and for possible updates to the E.O. List as needed.

This notice is also a request for information and/or comment on Comply Chain: Business Tools for Labor Compliance in Global Supply Chains (Comply Chain). ILAB is seeking information on current practices of firms, business associations, and other private sector groups to reduce the likelihood of child labor and forced labor in the production of goods. This information and/or comment is sought to fulfill ILAB's mandate under the Trafficking Victims Protection Reauthorization Act of 2005 (TVPRA) to work with persons who are involved in the production of goods made with forced labor or child labor. Comply Chain seeks to address this mandate through the creation of a standard set of practices that will reduce the likelihood that such persons will produce goods using forced labor or child labor. Comply Chain also achieves a much broader purpose by actively supporting the efforts of companies that seek to address these issues within their own supply chains. Relevant information and/or comment submitted to ILAB will be used to improve and update Comply Chain to better meet the mandates of the TVPRA and help companies and industry groups seeking to develop robust social compliance systems for their global production.

I. The Trade and Development Act of 2000 (TDA), Public Law 106–200 (2000), established eligibility criterion for receipt of trade benefits under the Generalized System of Preferences (GSP). The TDA amended the GSP reporting requirements of Section 504 of the Trade Act of 1974, 19 U.S.C. 2464, to require that the President's annual report on the status of internationally recognized worker rights include ''findings by the Secretary of Labor with respect to the beneficiary country's implementation of its international commitments to eliminate the worst forms of child labor.''

The TDA Conference Report clarifies this mandate, indicating that the President consider the following when considering whether a country is complying with its obligations to eliminate the worst forms of child labor: (1) Whether the country has adequate laws and regulations proscribing the worst forms of child labor; (2) whether the country has adequate laws and regulations for the implementation and enforcement of such measures; (3) whether the country has established formal institutional mechanisms to investigate and address complaints relating to allegations of the worst forms of child labor; (4) whether social programs exist in the country to prevent the engagement of children in the worst forms of child labor, and to assist with the removal of children engaged in the worst forms of child labor; (5) whether the country has a comprehensive policy for the elimination of the worst forms of child labor; and (6) whether the country is making *continual progress* toward eliminating the worst forms of child labor.'' DOL fulfills this reporting mandate through annual publication of the U.S. Department of Labor's Findings on the Worst Forms of Child Labor with respect to countries eligible for GSP. To access the 2020 TDA report, please visit ILAB's TDA web page.

II. Section 105(b) of the Trafficking Victims Protection Reauthorization Act of 2005 (''TVPRA of 2005''), Public Law 109–164 (2006), 22 U.S.C 7112(b), as amended by Section 133 of the Frederick Douglass Trafficking Victims Prevention and Protection Reauthorization Act of 2018, Public Law 115–425 (2019), directs the Secretary of Labor, acting through ILAB, to ''develop and make available to the public a list of goods from countries that [ILAB] has reason to believe are produced by forced labor or child labor in violation of international standards, including, to the extent practicable, goods that are produced with inputs that are produced with forced labor or child labor.'' (TVPRA List).

Pursuant to this mandate, DOL published in the **Federal Register** a set of procedural guidelines that ILAB follows in developing the TVPRA List. 72 FR 73374 (Dec. 27, 2007). The guidelines set forth the criteria by which information is evaluated; established procedures for public submission of information to be considered by ILAB; and identified the process ILAB follows in maintaining and updating the List after its initial publication. DOL published an update to the procedural guidelines to incorporate the expanded requirement to include ''to the extent practicable, goods that are produced with inputs that are produced with forced labor or child labor. 85 FR 29487 (May 15, 2020).

ILAB published its first TVPRA List on September 30, 2009, and issued updates in 2010, 2011, 2012, 2013, 2014, 2016, 2018, and 2020. (In 2014, ILAB began publishing the TVPRA List every other year, pursuant to changes in the law. See 22 U.S.C. 7112(b)(3).) In addition, on June 23, 2021, DOL added an additional good to the 2020 TVPRA List. 86 FR 32977. The next TVPRA List will be published in 2022. For a copy of previous editions of the TVPRA List and other materials relating to the TVPRA List, see ILAB's TVPRA web page.

III. Executive Order No. 13126 (E.O. 13126) declared that it was ''the policy of the United States Government . . . that the executive agencies shall take appropriate actions to enforce the laws prohibiting the manufacture or importation of goods, wares, articles, and merchandise mined, produced, or manufactured wholly or in part by forced or indentured child labor.'' Pursuant to E.O. 13126, and following public notice and comment, the Department of Labor published in the January 18, 2001, **Federal Register**, a list of products (''E.O. List''), identified by country of origin, that the Department, in consultation and cooperation with the Departments of State (DOS) and Treasury [relevant responsibilities are now within the Department of Homeland Security (DHS)], had a reasonable basis to believe might have been mined, produced or manufactured with forced or indentured child labor. 66 FR 5353 (Jan. 18, 2001). In addition to the List, the Department also published on January 18, 2001, ''Procedural Guidelines for Maintenance of the List of Products Requiring Federal Contractor Certification as to Forced or Indentured Child Labor,'' which provide for maintaining, reviewing, and, as appropriate, revising the E.O. List. 66 FR 5351 (Jan. 18, 2001).

Pursuant to Sections D through G of the Procedural Guidelines, the E.O. List may be updated through consideration of submissions by individuals or through OCFT's own initiative. ILAB has officially revised the E.O. List six times, most recently on March 25, 2019, each time after public notice and comment as well as consultation with DOS and DHS. Access to the current E.O. List, Procedural Guidelines, and related information.

*Information Requested and Invitation to Comment:* Interested parties are invited to comment and provide information regarding these reports. DOL requests comments on or information relevant to updating the findings and suggested government actions for countries reviewed in the TDA report, assessing each country's individual advancement toward eliminating the worst forms of child labor during the current reporting period compared to previous years, and maintaining and updating the TVPRA and E.O. Lists. Materials submitted should be confined to the specific topics of the TDA report, the TVPRA List, and the E.O. List. DOL will generally consider sources with dates up to five years old (*i.e.,* data not older than January 1, 2017). DOL appreciates the extent to which submissions clearly indicate the time period to which they apply. In the interest of transparency in our reporting, classified information will not be accepted. Where applicable, information submitted should indicate its source or sources, and copies of the source material should be provided. If primary sources are utilized, such as research studies, interviews, direct observations, or other sources of quantitative or qualitative data, details on the research or data-gathering methodology should be provided. Please see the TDA report, TVPRA List, and the E.O. List for a complete explanation of relevant terms, definitions, and reporting guidelines employed by DOL. Per our standard procedures, submissions will be published on the ILAB web page.

IV: Section 104(b)(2)(D) of The Trafficking Victims Protection Reauthorization Act (TVPRA) of 2005 mandates that ILAB ''work with persons who are involved in the production of goods on [ILAB's List of Goods Produced by Child Labor or Forced Labor] to create a standard set of practices that will reduce the likelihood that such persons will produce goods using [forced and child labor].''

Many firms have policies, activities, and/or systems in place to monitor labor rights in their supply chains and remediate violations. Such policies, activities and systems vary depending on location, industry, and many other factors. ILAB seeks to identify practices that have been effective in specific contexts, analyze their replicability, and disseminate those that have potential to be effective on a broader scale through Comply Chain.

*Information Requested and Invitation to Comment:* In addition to general comments on the existing publication of Comply Chain, ILAB is seeking information on current practices of firms, business associations, and other private sector groups to reduce the likelihood of child labor and forced labor in the production of goods. ILAB

welcomes any and all input. Examples of materials could include, but are not limited to: (1) Codes of conduct; (2) Sets of standards used for implementation of codes in specific industries or locations or among particular labor populations; (3) Auditing/monitoring systems, or components of such systems, as well as related systems for enforcement of labor standards across a supply chain; (4) Strategies for monitoring sub-tier suppliers, informal workplaces, homework, and other challenging environments; (5) Training modules and other mechanisms for communicating expectations to stakeholders which incorporate worker input; (6) Traceability models or experiences; (7) Remediation strategies for children and/or adults found in conditions of forced or child labor; (8) Reporting-related practices and practices related to independent review; (9) Projects at the grassroots level which address underlying issues or root causes of child labor or forced labor; (10) and/or any other relevant practices.

In addition, ILAB is seeking information on current practices of governments to collaborate with private sector actors through public-private partnerships to reduce the likelihood of child labor and forced labor in the production of goods. Submissions may include policy documents, reports, statistics, case studies, and many other formats. In addition, ILAB welcomes submissions of reports, analyses, guidance, toolkits, and other documents in which such practices have been compiled or analyzed by third-party groups. Information should be submitted to the addresses and within the time period set forth above. DOL seeks information that can be used to inform the development of tools and resources to be disseminated publicly on the DOL website and/or in other publications. However, in disseminating information, DOL will conceal, to the extent permitted by law, the identity of the submitter and/or the individual or company using the practice in question, upon request. Internal, confidential documents that cannot be shared with the public will not be used. Submissions containing confidential or personal information may be redacted by DOL before being made available to the public, in accordance with applicable laws and regulations. DOL does not commit to responding directly to submissions or returning submissions to the submitters, but DOL may communicate with the submitter regarding any matters relating to the submission.

This notice is a general solicitation of comments from the public.

*Authority:* 22 U.S.C. 7112(b)(2)(C) & (D) and 19 U.S.C. 2464; Executive Order 13126.

Signed at Washington, DC, this first day of October, 2021.

**Thea Mei Lee,**

*Deputy Undersecretary.*

[FR Doc. 2021–21977 Filed 10–7–21; 8:45 am]

BILLING CODE 4510–28–P

## NATIONAL FOUNDATION ON THE ARTS AND THE HUMANITIES

### Federal Council on the Arts and the Humanities

### Arts and Artifacts Indemnity Panel Advisory Committee

**AGENCY:** Federal Council on the Arts and the Humanities; National Foundation on the Arts and the Humanities.

**ACTION:** Notice of meeting.

**SUMMARY:** Pursuant to the Federal Advisory Committee Act, notice is hereby given that the Federal Council on the Arts and the Humanities will hold a meeting of the Arts and Artifacts International Indemnity Panel.

**DATES:** The meeting will be held on Wednesday, November 17, 2021, from 12:00 p.m. until adjourned.

**ADDRESSES:** The meeting will be held by videoconference originating at the National Endowment for the Arts, Washington, DC 20506.

**FOR FURTHER INFORMATION CONTACT:** Elizabeth Voyatzis, Committee Management Officer, 400 7th Street SW, Room 4060, Washington, DC 20506, (202) 606–8322; *evoyatzis@neh.gov*.

**SUPPLEMENTARY INFORMATION:** The purpose of the meeting is for panel review, discussion, evaluation, and recommendation on applications for Certificates of Indemnity submitted to the Federal Council on the Arts and the Humanities, for exhibitions beginning on or after January 1, 2022. Because the meeting will consider proprietary financial and commercial data provided in confidence by indemnity applicants, and material that is likely to disclose trade secrets or other privileged or confidential information, and because it is important to keep the values of objects to be indemnified and the methods of transportation and security measures confidential, I have determined that that the meeting will be closed to the public pursuant to subsection (c)(4) of section 552b of Title 5, United States Code. I have made this determination under the authority granted me by the Chairman's Delegation of Authority to Close Advisory Committee Meetings, dated April 15, 2016.

Dated: October 5, 2021.

**Samuel Roth,**

*Attorney-Advisor, National Endowment for the Humanities.*

[FR Doc. 2021–22051 Filed 10–7–21; 8:45 am]

BILLING CODE 7536–01–P

## NEIGHBORHOOD REINVESTMENT CORPORATION

### Sunshine Act Meetings

**TIME AND DATE:** 1:30 p.m., Monday, October 18, 2021.

**PLACE:** Via Conference Call.

**STATUS:** This meeting will be closed to the public.

**MATTERS TO BE CONSIDERED:** Special Audit Committee meeting

**Agenda**

I. CALL TO ORDER
II. Sunshine Act Vote to Close Meeting
III. Executive Session
IV. Other Matter
V. Adjournment

**CONTACT PERSON FOR MORE INFORMATION:** Lakeyia Thompson, Special Assistant, (202) 524–9940; *lthompson@nw.org.*

**Lakeyia Thompson,**

*Special Assistant.*

[FR Doc. 2021–22089 Filed 10–6–21; 11:15 am]

BILLING CODE 7570–02–P

## NUCLEAR REGULATORY COMMISSION

**[NRC–2021–0035]**

### Information Collection: Requirements for Renewal of Operating Licenses for Nuclear Power Plants

**AGENCY:** Nuclear Regulatory Commission.

**ACTION:** Notice of submission to the Office of Management and Budget; request for comment.

**SUMMARY:** The U.S. Nuclear Regulatory Commission (NRC) has recently submitted a request for renewal of an existing collection of information to the Office of Management and Budget (OMB) for review. The information collection is entitled, ''Requirements for Renewal of Operating Licenses for Nuclear Power Plants.''

**DATES:** Submit comments by November 8, 2021. Comments received after this date will be considered if it is practical to do so, but the Commission is able to

ensure consideration only for comments received on or before this date.

**ADDRESSES:** Written comments and recommendations for the proposed information collection should be sent within 30 days of publication of this notice to *https://www.reginfo.gov/public/do/PRAMain.* Find this particular information collection by selecting ''Currently under Review—Open for Public Comments'' or by using the search function.

**FOR FURTHER INFORMATION CONTACT:** David C. Cullison, NRC Clearance Officer, U.S. Nuclear Regulatory Commission, Washington, DC 20555–0001; telephone: 301–415–2084; email: *Infocollects.Resource@nrc.gov.*

**SUPPLEMENTARY INFORMATION:**

## I. Obtaining Information and Submitting Comments

### *A. Obtaining Information*

Please refer to Docket ID NRC–2021–0035 when contacting the NRC about the availability of information for this action. You may obtain publicly available information related to this action by any of the following methods:

- *Federal Rulemaking Website:* Go to *https://www.regulations.gov/* and search for Docket ID NRC–2021–0035.
- *NRC's Agencywide Documents Access and Management System (ADAMS):* You may obtain publicly available documents online in the ADAMS Public Documents collection at *https://www.nrc.gov/reading-rm/adams.html.* To begin the search, select ''Begin Web-based ADAMS Search.'' For problems with ADAMS, please contact the NRC's Public Document Room (PDR) reference staff at 1–800–397–4209, 301–415–4737, or by email to *pdr.resource@nrc.gov.* The supporting statement is available in ADAMS under Accession No. ML21168A068.
- *Attention:* The PDR, where you may examine and order copies of public documents, is currently closed. You may submit your request to the PDR via email at *pdr.resource@nrc.gov* or call 1–800–397–4209 or 301–415–4737, between 8:00 a.m. and 4:00 p.m. (ET), Monday through Friday, except Federal holidays.
- *NRC's Clearance Officer:* A copy of the collection of information and related instructions may be obtained without charge by contacting the NRC's Clearance Officer, David C. Cullison, Office of the Chief Information Officer, U.S. Nuclear Regulatory Commission, Washington, DC 20555–0001; telephone: 301–415–2084; email: *Infocollects.Resource@nrc.gov.*

### *B. Submitting Comments*

Written comments and recommendations for the proposed information collection should be sent within 30 days of publication of this notice to *https://www.reginfo.gov/public/do/PRAMain.* Find this particular information collection by selecting ''Currently under Review—Open for Public Comments'' or by using the search function.

The NRC cautions you not to include identifying or contact information in comment submissions that you do not want to be publicly disclosed in your comment submission. All comment submissions are posted at *https://www.regulations.gov/* and entered into ADAMS. Comment submissions are not routinely edited to remove identifying or contact information.

If you are requesting or aggregating comments from other persons for submission to the OMB, then you should inform those persons not to include identifying or contact information that they do not want to be publicly disclosed in their comment submission. Your request should state that comment submissions are not routinely edited to remove such information before making the comment submissions available to the public or entering the comment into ADAMS.

## II. Background

Under the provisions of the Paperwork Reduction Act of 1995 (44 U.S.C. Chapter 35), the NRC recently submitted a request for renewal of an existing collection of information to OMB for review entitled, Part 54 of title 10 of the *Code of Federal Regulations* (10 CFR), ''Requirements for Renewal of Operating Licenses for Nuclear Power Plants.'' The NRC hereby informs potential respondents that an agency may not conduct or sponsor, and that a person is not required to respond to, a collection of information unless it displays a currently valid OMB control number.

The NRC published a **Federal Register** notice with a 60-day comment period on this information collection on May 19, 2021 (86 FR 27119). On August 23, 2021, the NRC published a **Federal Register** notice with a 30-day comment period (86 FR 47166). The NRC was delayed in submitting the renewal to OMB, therefore, the NRC is reissuing this information collection to provide the public the full 30 days to submit comments.

1. *The title of the information collection:* 10 CFR part 54 ''Requirements for Renewal of Operating Licenses for Nuclear Power Plants.''
2. *OMB approval number:* 3150–0155.
3. *Type of submission:* Extension.
4. *The form number, if applicable:* Not Applicable.
5. *How often the collection is required or requested:* There is a one-time application for any licensee wishing to renew the operating license for its nuclear power plant. There is a one-time requirement for each licensee with a renewed operating license to submit a letter documenting the completion of inspection and testing activities. All holders of renewed licenses must perform yearly record keeping.
6. *Who will be required or asked to respond:* Commercial nuclear power plant licensees who wish to renew their operating licenses and holders of renewed licenses.
7. *The estimated number of annual responses:* 66 (11 reporting responses + 55 recordkeepers).
8. *The estimated number of annual respondents:* 62 (1 initial license renewal application + 1 subsequent license renewal application + 5 completion letters + 55 recordkeepers).
9. *The estimated number of hours needed annually to comply with the information collection requirement or request:* 216,700 (160,200 hours reporting + 56,500 hours recordkeeping).
10. *Abstract:* 10 CFR part 54 establishes license renewal requirements for commercial nuclear power plants and describes the information that licensees must submit to the NRC when applying for a license renewal. The application must contain information on how the licensee will manage the detrimental effects of age-related degradation on certain plant systems, structures, and components to continue the plant's safe operation during the renewal term. The NRC needs this information to determine whether the licensee's actions will be effective in assuring the plants' continued safe operation during the period of extended operation. Holders of renewed licenses must retain in an auditable and retrievable form, for the term of the renewed operating license, all information and documentation required to document compliance with 10 CFR part 54. The NRC needs access to this information for continuing effective regulatory oversight.

Dated: October 5, 2021.

For the Nuclear Regulatory Commission.

**David C. Cullison,**

*NRC Clearance Officer, Office of the Chief Information Officer.*

[FR Doc. 2021–22020 Filed 10–7–21; 8:45 am]

**BILLING CODE 7590–01–P**

## NUCLEAR REGULATORY COMMISSION

### 690th Meeting of the Advisory Committee on Reactor Safeguards (ACRS)

In accordance with the purposes of Sections 29 and 182b of the Atomic Energy Act (42 U.S.C. 2039, 2232(b)), the Advisory Committee on Reactor Safeguards (ACRS) will hold meetings on November 2–5, 2021. As part of the coordinated government response to combat the COVID–19 public health emergency, the Committee will be conducting meetings that will include some Members being physically present at the NRC while other Members will be participating remotely. The public will be able to participate in any open sessions via 301–576–2978, passcode 202240467#. A more detailed agenda may be found at the ACRS public website at *https://www.nrc.gov/reading-rm/doc-collections/acrs/agenda/index.html.*

**Tuesday, November 2, 2021**

*9:30 a.m.–9:35 a.m.: Opening Remarks by the ACRS Chairman* (Open)—The ACRS Chairman will make opening remarks regarding the conduct of the meeting.

*9:35 a.m.–11:00 a.m.: Draft Final Rule for Emergency Planning for Small Modular Reactors and Other New Technologies* (Open)—The Committee will have presentations and discussion with representatives from the NRC staff regarding the subject topic.

*11:00 a.m.–12:00 p.m.: Committee Deliberation on Draft Final Rule for Emergency Planning for Small Modular Reactors and Other New Technologies (Open)*—The Committee will deliberate regarding the subject topic.

*1:00 p.m.–2:30 p.m.: ISG-Supplemental Guidance for Radiological Consequence Analyses Using Alternative Source Terms (Open)*—The Committee will have presentations and discussion with representatives from the NRC staff regarding the subject topic.

*2:30 p.m.–3:30 p.m.: Committee Deliberation on ISG-Supplemental Guidance for Radiological Consequence Analyses Using Alternative Source Terms* (Open)—The Committee will deliberate regarding the subject topic.

*3:30 p.m.–6:00 p.m.: Preparation of Reports* (Open)—The Committee will continue its discussion of proposed ACRS reports.

**Wednesday, November 3, 2021**

*9:30 a.m.–11:00 a.m.: Draft NUREG–2246 on Advanced Reactors Fuel Qualification* (Open)—The Committee will have presentations and discussion with representatives from the NRC staff regarding the subject topic.

*11:00 a.m.–12:00 p.m.: Committee Deliberation on Draft NUREG–2246 on Advanced Reactors Fuel Qualification NUREG (Open)*—The Committee will deliberate regarding the subject topic.

*1:00 p.m.–2:30 p.m.: ORNL Report on Molten Salt Reactor Fuel Qualification (Open)*—The Committee will have presentations and discussion with representatives from the NRC staff regarding the subject topic.

*2:30 p.m.–3:30 p.m.: Committee Deliberation on ORNL Report on Molten Salt Reactor Fuel Qualification* (Open)—The Committee will deliberate regarding the subject topic.

*3:45 p.m.–5:00 p.m.: Biennial Report on Research Program* (Open)—The Committee will have presentations and discussion with representatives from the NRC staff regarding the subject topic.

*5:00 p.m.–6:00 p.m.: Preparation of Reports* (Open)—The Committee will continue its discussion of proposed ACRS reports.

**Thursday, November 4, 2021**

*9:30 a.m.–12:00 p.m.: Future ACRS Activities/Report of the Planning and Procedures Subcommittee and Reconciliation of ACRS Comments and Recommendations/Preparation of Reports* (Open/Closed)—The Committee will hear discussion of the recommendations of the Planning and Procedures Subcommittee regarding items proposed for consideration by the Full Committee during future ACRS meetings, and/or proceed to preparation of reports as determined by the Chairman. [**Note:** Pursuant to 5 U.S.C. 552b(c)(4), a portion of this session may be closed in order to discuss and protect information designated as proprietary.] [NOTE: Pursuant to 5 U.S.C. 552b(c)(2) and (6), a portion of this meeting may be closed to discuss organizational and personnel matters that relate solely to internal personnel rules and practices of the ACRS, and information the release of which would constitute a clearly unwarranted invasion of personal privacy.]

*1:00 p.m.–6:00 p.m.: Preparation of Reports* (Open)—The Committee will continue its discussion of proposed ACRS reports.

**Friday, November 5, 2021**

*9:30 a.m.–6:00 p.m.: Preparation of Reports* (Open)—The Committee will continue its discussion of proposed ACRS reports and Commission Meeting preparation.

Procedures for the conduct of and participation in ACRS meetings were published in the **Federal Register** on June 13, 2019 (84 FR 27662). In accordance with those procedures, oral or written views may be presented by members of the public, including representatives of the nuclear industry. Persons desiring to make oral statements should notify Quynh Nguyen, Cognizant ACRS Staff and the Designated Federal Officer (DFO) (Telephone: 301–415–5844, Email: *Quynh.Nguyen@nrc.gov*), 5 days before the meeting, if possible, so that appropriate arrangements can be made to allow necessary time during the meeting for such statements. In view of the possibility that the schedule for ACRS meetings may be adjusted by the Chairman as necessary to facilitate the conduct of the meeting, persons planning to attend should check with the Cognizant ACRS staff if such rescheduling would result in major inconvenience.

An electronic copy of each presentation should be emailed to the Cognizant ACRS Staff at least one day before meeting.

In accordance with Subsection 10(d) of Public Law 92–463 and 5 U.S.C. 552b(c), certain portions of this meeting may be closed, as specifically noted above. Use of still, motion picture, and television cameras during the meeting may be limited to selected portions of the meeting as determined by the Chairman. Electronic recordings will be permitted only during the open portions of the meeting.

ACRS meeting agendas, meeting transcripts, and letter reports are available through the NRC Public Document Room (PDR) at *pdr.resource@nrc.gov,* or by calling the PDR at 1–800–397–4209, or from the Publicly Available Records System (PARS) component of NRC's Agencywide Documents Access and Management System (ADAMS), which is accessible from the NRC website at *http://www.nrc.gov/reading-rm/adams.html* or *http://www.nrc.gov/reading-rm/doc-collections/#ACRS/.*

Dated: October 5, 2021.

**Russell E. Chazell,**

*Federal Advisory Committee Management Officer, Office of the Secretary.*

[FR Doc. 2021–22071 Filed 10–7–21; 8:45 am]

**BILLING CODE 7590–01–P**

## NUCLEAR REGULATORY COMMISSION

**[NRC–2021–0114]**

## Information Collection: NRC Form 531, Request for Taxpayer Identification Number

**AGENCY:** Nuclear Regulatory Commission.

**ACTION:** Renewal of existing information collection; request for comment.

**SUMMARY:** The U.S. Nuclear Regulatory Commission (NRC) invites public comment on the renewal of Office of Management and Budget (OMB) approval for an existing collection of information. The information collection is entitled, NRC Form 531, ''Request for Taxpayer Identification Number.''

**DATES:** Submit comments by December 7, 2021. Comments received after this date will be considered if it is practical to do so, but the Commission is able to ensure consideration only for comments received on or before this date.

**ADDRESSES:** You may submit comments by any of the following methods; however, the NRC encourages electronic comment submission through the Federal Rulemaking website:

- *Federal Rulemaking Website:* Go to *https://www.regulations.gov* and search for Docket ID NRC–2021–0114. Address questions about Docket IDs in *Regulations.gov* to Stacy Schumann; telephone: 301–415–0624; email: *Stacy.Schumann@nrc.gov.* For technical questions, contact the individual listed in the **FOR FURTHER INFORMATION CONTACT** section of this document.
- *Mail comments to:* David Cullison, Office of the Chief Information Officer, Mail Stop: T–6 A10M, U.S. Nuclear Regulatory Commission, Washington, DC 20555–0001.

For additional direction on obtaining information and submitting comments, see ''Obtaining Information and Submitting Comments'' in the **SUPPLEMENTARY INFORMATION** section of this document.

**FOR FURTHER INFORMATION CONTACT:** David Cullison, Office of the Chief Information Officer, U.S. Nuclear Regulatory Commission, Washington, DC 20555–0001; telephone: 301–415–2084; email: *Infocollects.Resource@nrc.gov.*

**SUPPLEMENTARY INFORMATION:**

### I. Obtaining Information and Submitting Comments

*A. Obtaining Information*

Please refer to Docket ID NRC–2021–0114 when contacting the NRC about the availability of information for this action. You may obtain publicly available information related to this action by any of the following methods:

- *Federal Rulemaking Website:* Go to *https://www.regulations.gov/* and search for Docket ID NRC–2021–0114. A copy of the collection of information and related instructions may be obtained without charge by accessing Docket ID NRC–2021–0114 on this website.
- *NRC's Agencywide Documents Access and Management System (ADAMS):* You may obtain publicly available documents online in the ADAMS Public Documents collection at *https://www.nrc.gov/reading-rm/adams.html.* To begin the search, select ''Begin Web-based ADAMS Search.'' For problems with ADAMS, please contact the NRC's Public Document Room (PDR) reference staff at 1–800–397–4209, 301–415–4737, or by email to *pdr.resource@nrc.gov.* The supporting statement and NRC Form 531 are available in ADAMS under Accession Nos. ML21245A071 and ML21266A296, respectively.
- *Attention:* The PDR, where you may examine and order copies of public documents, is currently closed. You may submit your request to the PDR via email at *pdr.resource@nrc.gov* or call 1–800–397–4209 or 301–415–4737, between 8:00 a.m. and 4:00 p.m. (ET), Monday through Friday, except Federal holidays.
- *NRC's Clearance Officer:* A copy of the collection of information and related instructions may be obtained without charge by contacting the NRC's Clearance Officer, David Cullison, Office of the Chief Information Officer, U.S. Nuclear Regulatory Commission, Washington, DC 20555–0001; telephone: 301–415–2084; email: *Infocollects.Resource@nrc.gov.*

*B. Submitting Comments*

The NRC encourages electronic comment submission through the Federal Rulemaking website (*https://www.regulations.gov*). Please include Docket ID NRC–2021–0114 in your comment submission.

The NRC cautions you not to include identifying or contact information in comment submissions that you do not want to be publicly disclosed in your comment submission. All comment submissions are posted at *https://www.regulations.gov/* and entered into ADAMS. Comment submissions are not routinely edited to remove identifying or contact information.

If you are requesting or aggregating comments from other persons for submission to the OMB, then you should inform those persons not to include identifying or contact information that they do not want to be publicly disclosed in their comment submission. Your request should state that comment submissions are not routinely edited to remove such information before making the comment submissions available to the public or entering the comment into ADAMS.

### II. Background

In accordance with the Paperwork Reduction Act of 1995 (44 U.S.C. Chapter 35), the NRC is requesting public comment on its intention to request the OMB's approval for the information collection summarized below.

1. *The title of the information collection:* NRC Form 531, ''Request for Taxpayer Identification Number.''
2. *OMB approval number:* 3150–0188.
3. *Type of submission:* Extension.
4. *The form number, if applicable:* NRC Form 531.
5. *How often the collection is required or requested:* Licensees are only required to submit once.
6. *Who will be required or asked to respond:* NRC Form 531 is used to collect taxpayer identification numbers (TINs) and information sufficient to identify the licensee or applicant for licenses, certificates, approvals, and registrations.
7. *The estimated number of annual responses:* 300.
8. *The estimated number of annual respondents:* 300.
9. *The estimated number of hours needed annually to comply with the information collection requirement or request:* 75.
10. *Abstract:* The Debt Collection Improvement Act of 1996 requires that agencies collect TINs from individuals who do business with the Government, including contractors and recipients of credit, licenses, permits, and benefits. The TIN will be used to process all electronic payments (refunds) made to licensees by electronic funds transfer by the Department of the Treasury. The Department of the Treasury will use the TIN to determine whether the refund can be used to administratively offset any delinquent debts reported to the Treasury by other Government agencies. In addition, the TIN will be used to collect and report to the Department of the Treasury any delinquent indebtedness arising out of the

licensee's or applicant's relationship with the NRC.

**III. Specific Requests for Comments**

The NRC is seeking comments that address the following questions:

1. Is the proposed collection of information necessary for the NRC to properly perform its functions? Does the information have practical utility?
2. Is the estimate of the burden of the information collection accurate?
3. Is there a way to enhance the quality, utility, and clarity of the information to be collected?
4. How can the burden of the information collection on respondents be minimized, including the use of automated collection techniques or other forms of information technology?

Dated: October 5, 2021.

For the Nuclear Regulatory Commission.

**David C. Cullison,**

*NRC Clearance Officer, Office of the Chief Information Officer.*

[FR Doc. 2021–22016 Filed 10–7–21; 8:45 am]

**BILLING CODE 7590–01–P**

## NUCLEAR REGULATORY COMMISSION

**[NRC–2021–0001]**

## Sunshine Act Meetings

**TIME AND DATE:** Weeks of October 11, 18, 25, November 1, 8, 15, 2021.

**PLACE:** Commissioners' Conference Room, 11555 Rockville Pike, Rockville, Maryland.

**STATUS:** Public.

**MATTERS TO BE CONSIDERED:**

**Week of October 11, 2021**

There are no meetings scheduled for the week of October 11, 2021.

**Week of October 18, 2021—Tentative**

*Tuesday, October 19, 2021*

10:00 a.m. All Employees Meeting with the Commissioners (Public Meeting); (Contact: Anthony DeJesus: 301–287–9219).

*Additional Information:* Due to COVID–19, there will be no physical public attendance.

The public is invited to attend the Commission's meeting live by webcast at the Web address—*https://www.nrc.gov/.*

**Week of October 25, 2021—Tentative**

*Thursday, October 28, 2021*

10:00 a.m. Meeting with the Organization of Agreement States and the Conference of Radiation Control Program Directors (Public Meeting); (Contact: Stephen Poy: 301–415–7135).

*Additional Information:* Due to COVID–19, there will be no physical public attendance.

The public is invited to attend the Commission's meeting live by webcast at the Web address—*https://video.nrc.gov/.*

**Week of November 1, 2021—Tentative**

There are no meetings scheduled for the week of November 1, 2021.

**Week of November 8, 2021—Tentative**

There are no meetings scheduled for the week of November 8, 2021.

**Week of November 15, 2021—Tentative**

There are no meetings scheduled for the week of November 15, 2021.

**CONTACT PERSON FOR MORE INFORMATION:** For more information or to verify the status of meetings, contact Wesley Held at 301–287–3591 or via email at *Wesley.Held@nrc.gov.* The schedule for Commission meetings is subject to change on short notice.

The NRC Commission Meeting Schedule can be found on the internet at: *https://www.nrc.gov/public-involve/public-meetings/schedule.html.*

The NRC provides reasonable accommodation to individuals with disabilities where appropriate. If you need a reasonable accommodation to participate in these public meetings or need this meeting notice or the transcript or other information from the public meetings in another format (*e.g.,* braille, large print), please notify Anne Silk, NRC Disability Program Specialist, at 301–287–0745, by videophone at 240–428–3217, or by email at *Anne.Silk@nrc.gov.* Determinations on requests for reasonable accommodation will be made on a case-by-case basis.

Members of the public may request to receive this information electronically. If you would like to be added to the distribution, please contact the Nuclear Regulatory Commission, Office of the Secretary, Washington, DC 20555, at 301–415–1969, or by email at *Tyesha.Bush@nrc.gov* or *Betty.Thweatt@nrc.gov.*

The NRC is holding the meetings under the authority of the Government in the Sunshine Act, 5 U.S.C. 552b.

Dated: October 6, 2021.

For the Nuclear Regulatory Commission.

**Wesley W. Held,**

*Policy Coordinator, Office of the Secretary.*

[FR Doc. 2021–22156 Filed 10–6–21; 4:15 pm]

**BILLING CODE 7590–01–P**

## NUCLEAR REGULATORY COMMISSION

**[Docket Nos. 50–269–SLR, 50–270–SLR, and 50–287–SLR; ASLBP No. 22–972–01–SLR–BD01]**

## Duke Energy Carolinas, LLC; Establishment of Atomic Safety and Licensing Board

Pursuant to delegation by the Commission, *see* 37 FR 28,710 (Dec. 29, 1972), and the Commission's regulations, *see, e.g.,* 10 CFR 2.104, 2.105, 2.300, 2.309, 2.313, 2.318, 2.321, notice is hereby given that an Atomic Safety and Licensing Board (Board) is being established to preside over the following proceeding:

DUKE ENERGY CAROLINAS, LLC, (Oconee Nuclear Station, Units 1, 2, and 3)

This proceeding involves an application seeking a twenty-year subsequent license renewal of Renewed Facility Operating License Nos. DPR–38, DPR–47, and DPR–55, which authorize Duke Energy Carolinas, LLC to operate the Oconee Nuclear Station, Units 1, 2, and 3, located in Seneca, South Carolina until, respectively, February 6, 2033, October 6, 2033, and July 19, 2034. In response to a notice published in the **Federal Register** announcing the opportunity to request a hearing, *see* 86 FR 40,662 (July 28, 2021), a hearing request was filed on September 27, 2021, on behalf of Beyond Nuclear and Sierra Club.

The Board is comprised of the following Administrative Judges:

G. Paul Bollwerk, III, Chairman, Atomic Safety and Licensing Board Panel, U.S. Nuclear Regulatory Commission, Washington, DC 20555–0001

Nicholas G. Trikouros, Atomic Safety and Licensing Board Panel, U.S. Nuclear Regulatory Commission, Washington, DC 20555–0001

Dr. Gary S. Arnold, Atomic Safety and Licensing Board Panel, U.S. Nuclear Regulatory Commission, Washington, DC 20555–0001

All correspondence, documents, and other materials shall be filed in accordance with the NRC E-Filing rule. *See* 10 CFR 2.302.

Rockville, Maryland.

Dated: October 4, 2021.

**Edward R. Hawkens,**

*Chief Administrative Judge, Atomic Safety and Licensing Board Panel.*

[FR Doc. 2021–21978 Filed 10–7–21; 8:45 am]

**BILLING CODE 7590–01–P**

## POSTAL REGULATORY COMMISSION

**[Docket Nos. MC2022–1 and CP2022–1]**

### New Postal Product

**AGENCY:** Postal Regulatory Commission.

**ACTION:** Notice.

**SUMMARY:** The Commission is noticing a recent Postal Service filing for the Commission's consideration concerning a negotiated service agreement. This notice informs the public of the filing, invites public comment, and takes other administrative steps.

**DATES:** *Comments are due:* October 13, 2021.

**ADDRESSES:** Submit comments electronically via the Commission's Filing Online system at *http://www.prc.gov.* Those who cannot submit comments electronically should contact the person identified in the **FOR FURTHER INFORMATION CONTACT** section by telephone for advice on filing alternatives.

**FOR FURTHER INFORMATION CONTACT:** David A. Trissell, General Counsel, at 202–789–6820.

**SUPPLEMENTARY INFORMATION:**

### Table of Contents

I. Introduction
II. Docketed Proceeding(s)

### I. Introduction

The Commission gives notice that the Postal Service filed request(s) for the Commission to consider matters related to negotiated service agreement(s). The request(s) may propose the addition or removal of a negotiated service agreement from the market dominant or the competitive product list, or the modification of an existing product currently appearing on the market dominant or the competitive product list.

Section II identifies the docket number(s) associated with each Postal Service request, the title of each Postal Service request, the request's acceptance date, and the authority cited by the Postal Service for each request. For each request, the Commission appoints an officer of the Commission to represent the interests of the general public in the proceeding, pursuant to 39 U.S.C. 505 (Public Representative). Section II also establishes comment deadline(s) pertaining to each request.

The public portions of the Postal Service's request(s) can be accessed via the Commission's website (*http://www.prc.gov*). Non-public portions of the Postal Service's request(s), if any, can be accessed through compliance with the requirements of 39 CFR 3011.301.[1]

The Commission invites comments on whether the Postal Service's request(s) in the captioned docket(s) are consistent with the policies of title 39. For request(s) that the Postal Service states concern market dominant product(s), applicable statutory and regulatory requirements include 39 U.S.C. 3622, 39 U.S.C. 3642, 39 CFR part 3030, and 39 CFR part 3040, subpart B. For request(s) that the Postal Service states concern competitive product(s), applicable statutory and regulatory requirements include 39 U.S.C. 3632, 39 U.S.C. 3633, 39 U.S.C. 3642, 39 CFR part 3035, and 39 CFR part 3040, subpart B. Comment deadline(s) for each request appear in section II.

### II. Docketed Proceeding(s)

1. *Docket No(s).:* MC2022–1 and CP2022–1; *Filing Title:* USPS Request to Add Priority Mail Express & Priority Mail Contract 126 to Competitive Product List and Notice of Filing Materials Under Seal; *Filing Acceptance Date:* October 4, 2021; *Filing Authority:* 39 U.S.C. 3642, 39 CFR 3040.130 through 3040.135, and 39 CFR 3035.105; *Public Representative:* Kenneth R. Moeller; *Comments Due:* October 13, 2021.

This Notice will be published in the **Federal Register**.

**Erica A. Barker,**

*Secretary.*

[FR Doc. 2021–22007 Filed 10–7–21; 8:45 am]

**BILLING CODE 7710–FW–P**

[1] *See* Docket No. RM2018–3, Order Adopting Final Rules Relating to Non-Public Information, June 27, 2018, Attachment A at 19–22 (Order No. 4679).

## OFFICE OF SCIENCE AND TECHNOLOGY POLICY

### Notice of Request for Information (RFI) on Public and Private Sector Uses of Biometric Technologies

**AGENCY:** Office of Science and Technology Policy (OSTP).

**SUMMARY:** The Office of Science and Technology Policy (OSTP) requests input from interested parties on past deployments, proposals, pilots, or trials, and current use of biometric technologies for the purposes of *identity verification, identification of individuals,* and *inference of attributes including individual mental and emotional states.* The purpose of this RFI is to understand the extent and variety of biometric technologies in past, current, or planned use; the domains in which these technologies are being used; the entities making use of them; current principles, practices, or policies governing their use; and the stakeholders that are, or may be, impacted by their use or regulation. OSTP encourages input on both public and private sector use cases.

**DATES:** Interested persons and organizations are invited to submit comments on or before 5:00 p.m. ET on January 15, 2022.

**ADDRESSES:** Interested individuals and organizations should submit comments electronically to *BiometricRFI@ostp.eop.gov* and include *<RFI Response: Biometric Technologies>* in the subject line of the email. Due to time constraints, mailed paper submissions will not be accepted, and electronic submissions received after the deadline cannot be ensured to be incorporated or taken into consideration.

*Instructions:* Response to this RFI is voluntary. Each responding entity (individual or organization) is requested to submit only one response. OSTP welcomes any responses to help inform policies, especially those with a view toward equitably harnessing the benefits of scientifically valid technologies approved for appropriate contexts with iterative safeguards against anticipated and unanticipated misuse or harms.

Please feel free to respond to one or as many topics as you choose, while noting the number of the topic(s) to which you are responding. Submission must not exceed 10 pages in 12-point or larger font, with a page number provided on each page. Responses should include the name of the person(s) or organization(s) filing the comment, as well as the respondent type (*e.g.,* academic institution, advocacy group, professional society, community-based organization, industry, member of the public, government, other). Respondent's role in the organization may also be provided (*e.g.,* researcher, administrator, student, program manager, journalist) on a voluntary basis. Comments containing references, studies, research, and other empirical data that are not widely published should include copies or electronic links of the referenced materials. No business proprietary information, copyrighted information, or personally identifiable information should be submitted in response to this RFI. Please be aware that comments submitted in response to this RFI may be posted on OSTP's website or otherwise released publicly.

In accordance with Federal Acquisitions Regulations Systems 15.202(3), responses to this notice are

not offers and cannot be accepted by the Federal Government to form a binding contract. Additionally, those submitting responses are solely responsible for all expenses associated with response preparation.

**FOR FURTHER INFORMATION CONTACT:** For additional information, please direct questions to Suresh Venkatasubramanian at *biometric@ostp.eop.gov.*

**SUPPLEMENTARY INFORMATION:**

*Background:* To date, attention and legislation around AI-enabled biometric technologies has largely focused on the specific case of facial recognition technology used to identify individuals in law enforcement and in public and private settings. However, there are a growing number of domains that are beginning to make use of biometric information for *identification* or *inference* of emotion, disposition, character, or intent. This expanded set of uses includes but is not limited to:

- The use of facial recognition to control initial and continuing access to resources such as housing, medical records, schools, workplaces, and public benefits;
- Facial or voice analysis in employment (*e.g.,* to screen potential hires for trustworthiness and competence), education (*e.g.,* to detect risks to safety, determine student focus and attention in the classroom, and monitor online exams), and advertising (*e.g.,* to determine responses to advertising displays or track behavior in physical shopping contexts);
- Keystroke analysis for detection of medical conditions and cognition or mood;
- The use of gait recognition, voice recognition, and heart rate analysis for inference of level of cognitive ability and performance in healthcare (*e.g.,* for stroke recovery, and aids for autistic individuals); and
- Inferring intent (and mal-intent) in public settings.

Many concerns have been raised about the use of biometric technology, ranging from questions about the validity of the underlying science; differential effectiveness, outcomes, and harms for different demographic groups; and the role of biometric systems in increasing the use of surveillance technologies and broadening the scope of surveillance practices. Nonetheless, biometric technologies are often presented as a cheaper and more reliable form of identification, and as effective aids in clinical settings for diagnosis and therapeutic use, in addition to their use in public safety such as for finding missing persons and combating child trafficking.

OSTP seeks information and comments about AI-enabled biometric technology uses, including but not exclusive to the above.

*Terminology:* We use ''biometric information'' to refer to any measurements or derived data of an individual's physical (*e.g.,* DNA, fingerprints, face or retina scans) and behavioral (*e.g.,* gestures, gait, voice) characteristics. For the purpose of this RFI, we are especially interested in the use of biometric information for:

- *Recognition.* This includes the use of biometric information for *verification* (matching a claimed identity to a reference identity) and *identification* (real-time or post-facto identification of an individual or of all individuals in a crowd either in pursuit of a legal case or as part of broad surveillance in varied domains); and
- *Inference of cognitive and/or emotional state.* This includes the use of biometric information for *inference* of cognitive and/or emotional states (such as attentiveness, mental fatigue, stress, anxiousness, fear, or cheerfulness).

We broadly refer to a system that uses biometric information for the purpose of recognition or inference as ''biometric technology.''

*Scope:* OSTP invites input from any interested stakeholders, including industry and industry association groups; civil society and advocacy groups; state, local, and tribal governments; academic researchers; technical practitioners specializing in AI and biometrics; and the general public. In particular, OSTP is especially interested in input from parties developing biometric technologies, parties acquiring and using such technologies, and communities impacted by their use. Input is welcome from stakeholders, including members of the public, representing all backgrounds and perspectives.

*Information Requested:* Respondents may provide information for one or as many topics below as they choose. Through this RFI, OSTP seeks information on the use of biometric technologies in the public and private sectors, including on the following topics:

1. *Descriptions of use of biometric information for recognition and inference:* Information about planned, developed, or deployed uses of biometric information, including where possible any relevant dimensions of the context in which the information is being used or may be used, any stated goals of use, the nature and source of the data used, the deployment status (*e.g.,* past, current, or planned deployment) and, if applicable, the impacted communities.

2. *Procedures for and results of data-driven and scientific validation of biometric technologies:* Information about planned or in-use validation procedures and resulting validation outcomes for biometric technologies designed to ensure that the system outcomes are scientifically valid, including specific measures of validity and accuracy, resulting error rates, and descriptions of the specific measurement setup and data used for validation. Information on user experience research, impact assessment, or other evaluation of the efficacy of biometric technologies when deployed in a specific societal context is also welcome.

3. *Security considerations associated with a particular biometric technology.* Information about validation of the security of a biometric technology, or known vulnerabilities (such as spoofing or access breaches). Information on exhibited or potential leaks of personally identifying information via the exploitation of the biometric technology, its vulnerabilities, or changes to the context in which it is used. Information on security safeguards that have been proven to be efficacious for stakeholders including industry, researchers, end users, and impacted communities.

4. *Exhibited and potential harms of a particular biometric technology:* Consider harms including but not limited to: Harms due to questions about the validity of the science used in the system to generate the biometric data or due to questions about the inference process; harms due to disparities in effectiveness of the system for different demographic groups; harms due to limiting access to equal opportunity, as a pretext for selective profiling, or as a form of harassment; harms due to the technology being built for use in a specific context and then deployed in another context or used contrary to product specifications; or harms due to a lack of privacy and the surveillance infrastructure associated with the use of the system. Information on evidence of harm (in the case of an exhibited harm) or projections, research, or relevant historical evidence (in the case of potential harms) is also welcome.

5. *Exhibited and potential benefits of a particular biometric technology:* Consider benefits including, but not limited to: Benefits arising from use in a specific domain (absolute benefit); benefits arising from using a specific modality of biometric technology (or

combination thereof) compared to other modalities in a specific domain (relative benefit); and/or benefits arising from cost, consistency, and reliability improvements. Information on evidence of benefit (in the case of an exhibited benefit) or projections, research or relevant historical evidence (in the case of potential benefit) is also welcome.

6. *Governance programs, practices or procedures applicable to the context, scope, and data use of a specific use case:* Information regarding:

a. Stakeholder engagement practices for systems design, procurement, ethical deliberations, approval of use, human or civil rights frameworks, assessments, or strategies, to mitigate the potential harm or risk of biometric technologies;

b. Best practices or insights regarding the design and execution of pilots or trials to inform further policy developments;

c. Practices regarding data collection (including disclosure and consent), review, management (including data security and sharing), storage (including timeframes for holding data), and monitoring practices;

d. Safeguards or limitations regarding approved use (including policy and technical safeguards), and mechanisms for preventing unapproved use;

e. Performance auditing and post-deployment impact assessment (including benefits relative to current benchmarks and harms);

f. Practices regarding the use of biometric technologies in conjunction with other surveillance technologies (*e.g.,* via record linkage);

g. Practices or precedents for the admissibility in court of biometric information generated or augmented by AI systems; and

h. Practices for public transparency regarding: Use (including notice of use), impacts, opportunities for contestation and for redress, as appropriate.

Please note any governance measures that are required by law or by government, including human or civil rights frameworks, or corporate policy, including ethical principles, in cases of deployment, as well as any planned governance measures for planned or current-use biometric technologies.

Dated: October 4, 2021.

**Stacy Murphy,**

*Operations Manager.*

[FR Doc. 2021–21975 Filed 10–7–21; 8:45 am]

**BILLING CODE 3270–FI–P**

## SECURITIES AND EXCHANGE COMMISSION

**[Release No. 34–93245; File No. SR–NASDAQ–2021–075]**

## Self-Regulatory Organizations; The Nasdaq Stock Market LLC; Notice of Filing and Immediate Effectiveness of Proposed Rule Change To Amend the Discretion Attribute, at Equity 4, Rule 4703, in Light of Planned Changes to the System

October 4, 2021.

Pursuant to Section 19(b)(1) of the Securities Exchange Act of 1934 (''Act''),[1] and Rule 19b–4 thereunder,[2] notice is hereby given that on September 23, 2021, The Nasdaq Stock Market LLC (''Nasdaq'' or ''Exchange'') filed with the Securities and Exchange Commission (''Commission'') the proposed rule change as described in Items I and II below, which Items have been prepared by the Exchange. The Commission is publishing this notice to solicit comments on the proposed rule change from interested persons.

### I. Self-Regulatory Organization's Statement of the Terms of Substance of the Proposed Rule Change

The Exchange proposes to amend the Discretion Attribute, at Equity 4, Rule 4703 [3] in light of planned changes to the System, as described further below.

The text of the proposed rule change is available on the Exchange's website at *https://listingcenter.nasdaq.com/rulebook/nasdaq/rules,* at the principal office of the Exchange, and at the Commission's Public Reference Room.

### II. Self-Regulatory Organization's Statement of the Purpose of, and Statutory Basis for, the Proposed Rule Change

In its filing with the Commission, the Exchange included statements concerning the purpose of and basis for the proposed rule change and discussed any comments it received on the proposed rule change. The text of these statements may be examined at the places specified in Item IV below. The Exchange has prepared summaries, set forth in sections A, B, and C below, of the most significant aspects of such statements.

[1] 15 U.S.C. 78s(b)(1).

[2] 17 CFR 240.19b–4.

[3] References herein to Nasdaq Rules in the 4000 Series shall mean Rules in Nasdaq Equity 4.

*A. Self-Regulatory Organization's Statement of the Purpose of, and Statutory Basis for, the Proposed Rule Change*

1. Purpose

Presently, the Exchange is making functional enhancements and improvements to specific Order Types [4] and Order Attributes [5] that are currently only available via the RASH Order entry protocol.[6] Specifically, the Exchange will be upgrading the logic and implementation of these Order Types and Order Attributes so that the features are more streamlined across the Nasdaq Systems and order entry protocols, and will enable the Exchange to process these Orders more quickly and efficiently. Additionally, this System upgrade will pave the way for the Exchange to enhance the OUCH Order entry protocol [7] so that Participants may enter such Order Types and Order Attributes via OUCH, in addition to the RASH Order entry protocols.[8] The Exchange plans to implement its enhancement of the OUCH protocol sequentially, by Order Type and Order Attribute.[9]

[4] An ''Order Type'' is a standardized set of instructions associated with an Order that define how it will behave with respect to pricing, execution, and/or posting to the Nasdaq Book when submitted to Nasdaq. *See* Equity 1, Section 1(a)(7).

[5] An ''Order Attribute'' is a further set of variable instructions that may be associated with an Order to further define how it will behave with respect to pricing, execution, and/or posting to the Nasdaq Book when submitted to Nasdaq. *See id.*

[6] The RASH (Routing and Special Handling) Order entry protocol is a proprietary protocol that allows members to enter Orders, cancel existing Orders and receive executions. RASH allows participants to use advanced functionality, including discretion, random reserve, pegging and routing. See *http://nasdaqtrader.com/content/technicalsupport/specifications/TradingProducts/rash_sb.pdf.*

[7] The OUCH Order entry protocol is a Nasdaq proprietary protocol that allows subscribers to quickly enter orders into the System and receive executions. OUCH accepts limit Orders from members, and if there are matching Orders, they will execute. Non-matching Orders are added to the Limit Order Book, a database of available limit Orders, where they are matched in price-time priority. OUCH only provides a method for members to send Orders and receive status updates on those Orders. See *https://www.nasdaqtrader.com/Trader.aspx?id=OUCH.*

[8] The Exchange designed the OUCH protocol to enable members to enter Orders quickly into the System. As such, the Exchange developed OUCH with simplicity in mind, and it therefore lacks more complex order handling capabilities. By contrast, the Exchange specifically designed RASH to support advanced functionality, including discretion, random reserve, pegging and routing. Once the System upgrades occur, then the Exchange intends to propose further changes to its Rules to permit participants to utilize OUCH, in addition to RASH, to enter order types that require advanced functionality.

[9] The Exchange notes that its sister exchanges, Nasdaq BX and Nasdaq PSX, plan to file similar

To support and prepare for these upgrades and enhancements, the Exchange recently submitted three rule filings to the Commission that amended its rules pertaining to, among other things, Market Maker Peg Orders, Orders with Reserve Size, and Orders with Pegging and Trade Now Attributes.[10] The Exchange now proposes to further amend its Rules governing the Discretion Order Attribute, at Rule 4703(g), so that it aligns with how the System, once upgraded, will handle these Orders with Discretion going forward.

As set forth in Rule 4703(g), Discretion is an Order Attribute under which an Order has a non-displayed discretionary price range within which the entering Participant is willing to trade. Presently, the Rule provides that the System will process Discretionary Orders, upon entry, by generating a Non-Displayed Order with a Time-in-Force of Immediate-or-Cancel (a ''Discretionary IOC'') that will attempt to access liquidity available within the discretionary price range. The System will not permit the Discretionary IOC to execute, however, if the price of the execution would trade through a Protected Quotation. If more than one Order with Discretion satisfies conditions that would cause the generation of a Discretionary IOC simultaneously, the order in which such Discretionary IOCs will be presented for execution is random, based on the respective processing time for each such Order. Whenever a Discretionary IOC is generated, the underlying Order with Discretion will be withheld or removed from the Exchange's Book and will then be routed and/or placed on the Exchange's Book if the Discretionary IOC does not exhaust the full size of the underlying Order with Discretion, with its price determined by the underlying Order Type and Order Attributes selected by the Participant. In addition to prescribing a procedure for handling Discretionary Orders generally, the existing Rule also describes special procedures for handling Discretionary Orders with various types of Routing Attributes and with pegged discretionary price ranges.

The Exchange proposes to amend the process by which it processes Discretionary Orders in several respects. First, the Exchange proposes to clarify existing text which states that ''[a] Participant may also specify a limit price beyond which the discretionary price range does not extend.'' The Exchange intended for this clause to address the specific scenario where a Participant enters a Discretionary Order with a Discretionary Pegging Attribute, but the existing text is not explicit in this regard and thus is amenable to confusion. The Exchange proposes to restate this provision as follows to make its intention explicit: ''[a] Participant may also specify a limit on the discretionary price range of an Order that is entered with a Discretionary Pegging Attribute,'' and then further clarify the outcome of setting such a limit by stating ''beyond which the discretionary pegged price may not extend.''[11] The Exchange notes that it uses the word ''may'' in this provision rather than ''shall'' because for Discretionary Orders with Pegging Attributes, the Rules specify the discretionary range applicable to those Orders; setting a limit on how far that range is allowed to extend is optional.

As a further organizational matter, the Exchange proposes to consolidate the portion of the Rule that describes the general procedure for handling Discretionary Orders with the portion that described the process for handling Discretionary Orders without a Routing Attribute assigned to them. Because non-routed orders conform to the general procedure, it is redundant to restate the process.

Second, as to the substance of the general Discretionary Order handling procedures, the Exchange proposes the following changes. Rather than generate a Discretionary IOC immediately upon Order entry (regardless of available liquidity within the discretionary price range) and then post the unexecuted portion of the Discretionary Order on the Exchange's Book, the Exchange proposes instead to first, upon entry, execute the Discretionary Order against any previously posted Orders on the Exchange Book that are priced equal to or better than the limit price of the Discretionary Order. If no such Order exists with which the Discretionary Order may fully execute upon entry, then the Exchange will post the Discretionary Order to the Exchange's Book in accordance with the parameters that apply to the underlying Order Type. In such case, the Exchange will generate a Discretionary IOC, with a price equal to the highest price for an Order to buy (lowest price for an Order to sell) within the discretionary price range and a size equal to the order available for execution, if and when the System determines that liquidity within the discretionary price range is available for execution. The Exchange will then execute the Discretionary IOC (provided that doing so would not trade-through a Protected Quotation). The Exchange proposes this change to increase the efficiency with which the Exchange processes Discretionary Orders. The Exchange intended for the existing process to enable Discretionary Orders to execute immediately within the discretionary price range upon entry, but in practice, the Exchange observes that they rarely do so. Attempts to locate available liquidity within the discretionary range immediately upon entry delay Discretionary Orders from entering the priority queue on the Nasdaq Book, resulting in an opportunity cost when no such liquidity is located. The proposed rule change will reorient the order handling process for Discretionary Orders so that it no longer sacrifices potential queue priority for attempts at possible immediate executions within the discretionary price range. Given that immediate executions of Discretionary Orders within the discretionary price range rarely occur, the Exchange does not believe that this change will have any material adverse impact on the performance of such Orders. Moreover, the Exchange will still allow for Discretionary Orders to attempt to execute against available liquidity immediately upon entry if contra-side liquidity, priced equal to or better than the limit price of the Discretionary Order, is resting on the Book at that time. And, if participants select a Time-in-Force of Immediate-or-Cancel for such Orders, then the orders will attempt to execute against available liquidity within the discretionary price range, which is unchanged from current functionality.

As noted above, whereas now, the Exchange generates a Discretionary IOC that is equal to the size of the Discretionary Order, and then posts shares to the Book that remain unexecuted after the Exchange executes the Discretionary IOC against available liquidity in the discretionary price range, the Exchange instead proposes to generate a Discretionary IOC that will be

proposed rule changes with the Commission shortly.

[10] *See* Securities Exchange Act Release No. 34–92180 (June 15, 2021), 86 FR 33420 (June 24, 2021) (SR–NASDAQ–2021–044); Securities Exchange Act Release No. 34–91109 (February 11, 2021), 86 FR 10141 (February 18, 2021) (SR–NASDAQ–2020–090); Securities Exchange Act Release No. 34–90389 (November 10, 2020), 85 FR 73304 (November 17, 2020) (SR–NASDAQ–2020–071).

[11] For example, a displayed Order to buy might have a limit price of $11.00 and a discretionary price range pegged to the Best Bid with a discretionary limit of $11.05. If the NBB is $11.02 at the time of entry, the order will be displayed at $11.00 with a discretionary price range up to $11.02. If the NBB later become $11.06, the Order will still be displayed at $11.00 and its discretionary price range will be capped at $11.05.

equal to the size of the available liquidity within the discretionary range, with any residual shares of the Discretionary Order remaining on the Book and retaining their existing priority. If the Discretionary IOC is not fully executed,[12] the posted portion of the Discretionary Order will be reentered on the Nasdaq Book as a new Discretionary Order with a new timestamp and with an increased size to include the unexecuted portions of the Discretionary IOC. The Exchange believes that the proposed rule change will benefit participants by enabling their Discretionary Orders to remain executable against new incoming liquidity when available liquidity within the discretionary price range is smaller than the full size of the Discretionary Order (provided that Participants have not specified a minimum quantity for execution).

The Exchange proposes to move existing rule text that governs the situations where more than one Order with Discretion satisfies conditions that would cause the generation of a Discretionary IOC simultaneously. Whereas now, in all such situations, the order in which such Discretionary IOCs are presented for execution is random, based on the respective processing time for each such Order; going forward, the system will present Discretionary IOCs associated with Discretionary Orders without Routing differently as it gains responsibility for handling such Orders from RASH. That is, the system will present multiple Discretionary IOCs associated with such Orders for execution in price-time priority, as is specified in Rule 4757(a). The price by which the Orders will be prioritized for execution refers to the price of the Discretionary IOCs that are generated, meaning the highest price for the Order with Discretion to buy (lowest price for the Order with Discretion to sell) within the discretionary price range. This change will not affect Discretionary Orders with Routing, when Discretionary IOCs are generated for routing, which will continue to be handled by RASH under the existing random presentment procedures.

The Exchange proposes to add to the Rule the following example to illustrate the new procedures. If a Participant enters a Price to Display Order to buy 500 shares at $11 with a discretionary price range of up to $11.03, then upon entry, the Nasdaq Market Center will first execute the Order against any orders resting on the Nasdaq Book that are priced equal to or better than the limit price of the Discretionary Order. Assuming that no such resting order exists, the Nasdaq Market Center will post the full size of the Price to Display Order to the Nasdaq Book in accordance with its parameters. If there is an Order on the Nasdaq Book to sell 200 shares priced at $11.03, the Nasdaq Market Center will generate a Discretionary IOC to buy priced at $11.03 to execute against the Order on the Nasdaq Book, if an execution at $11.03 would not trade through a Protected Quotation; the remaining 300 shares of the original Order with Discretion will remain posted on the Nasdaq Book.[13]

With respect to procedures for processing Discretionary Orders with Routing Attributes assigned to them, the Exchange proposes to reorganize and consolidate the procedures, as well as to eliminate obsolete and duplicative text, and to improve readability.

Specifically, the Exchange proposes to largely delete bulleted text that presently describes distinct procedures for handling Discretionary Orders with passive and reactive routing strategies, as well as for handling Discretionary Orders with Routing Attributes depending upon whether the discretionary price range of the Order is pegged. The Exchange proposes to eliminate certain existing text that describes order handling procedures for Discretionary Orders with passive and reactive routing strategies after being posted because such procedures do not differ from the general procedures for handling Discretionary Orders with respect to available liquidity on the Nasdaq Book within the discretionary price range.[14] As to Discretionary Orders with reactive routing strategies, the Exchange believes that it is sufficient to state, going forward, that if a Discretionary IOC associated with such an Order does not exhaust the full size of the Discretionary Order, then the Exchange will generate and route additional Discretionary IOCs in response to new quotations within the discretionary price range according to the routing strategy assigned to the Order. Moreover, the Exchange proposes to retain language in the existing rule which states that, if a Discretionary Order uses a passive routing strategy, the System will not generate additional Discretionary IOC orders in response to new away market quotations within the discretionary price range unless the Order is updated in a manner that causes it to receive a new timestamp, in which case the Order will behave in the same manner as a newly entered Discretionary Order.

Moreover, the Exchange proposes to delete existing Rule text that describes how the Exchange handles Discretionary Orders with Routing Attributes in scenarios where such Orders do and do not have pegged discretionary price ranges associated with them. The text presently states that where a Discretionary IOC associated with such an Order does not exhaust the full size of the Order, the Exchange will post the remaining size of the Order to the Nasdaq Book in accordance with the parameters that apply to the underlying Order Type. With respect to Discretionary Orders with reactive routing strategies, the Exchange will examine whether there is an order on the Nasdaq Book or an accessible quotation at another trading venue that is within the discretionary price range and against which the Discretionary Order could execute. When the Exchange currently examines the Nasdaq Book in the scenario where the Discretionary Order with reactive routing has a pegged discretionary price range, it examines only displayed orders on the Nasdaq Book for this purpose, whereas if the Discretionary Order with Routing has no pegged discretionary price range, the Exchange examines all orders on its Book, including non-displayed orders. This distinction in order handling procedures is a legacy of the existing limitations of the RASH protocol that will no longer be applicable after the Exchange migrates responsibility from RASH to the System for handling Discretionary Orders. That is, going forward, the System will be capable of and will examine the Nasdaq Book for both displayed and non-displayed orders in the discretionary price range against which to execute Discretionary Orders with Routing, regardless of whether the discretionary price range of such Orders is pegged.

In the new proposed paragraph that governs Discretionary Orders with Routing, the Exchange also proposes to amend existing text concerning the

[12] A Discretionary IOC may not execute fully in a race condition where an incoming order executes against all or a portion of the available liquidity within the discretionary price range before the Discretionary IOC is able to do so.

[13] The Exchange also proposes to move and reorganize, but not substantively modify, certain text within Rule 4703(g) to eliminate duplication and improve its readability.

[14] The Exchange proposes to retain the concept in the existing rule that whenever it generates a Discretionary IOC, the underlying Order with Discretion will be withheld or removed from the Exchange's Book and will then be routed and/or placed on the Exchange's Book if the Discretionary IOC does not exhaust the full size of the underlying Order with Discretion, with its price determined by the underlying Order Type and Order Attributes selected by the Participant. However, rather than applying this concept to all Discretionary Orders going forward, the proposal will apply it only to Discretionary Orders with Routing Attributes, as this is the context in which the concept applies, in practice.

price and size at which the Exchange will generate a Discretionary IOC when, before routing, it determines that there is liquidity available on the Nasdaq Book within the discretionary price range with which the Discretionary Orders may interact.[15] Whereas existing rule text states that the Exchange will generate a Discretionary IOC in this instance that matches the price and size of the Order on the Nasdaq Book, the proposed rule text states that the Exchange will generate a Discretionary IOC equal to the highest price for the Order with Discretion to buy (lowest price for the Order with Discretion to sell) within the discretionary price range and a size equal to the applicable size of the available liquidity on the Nasdaq Book.

Additionally in that same paragraph, the Exchange proposes to change existing language that governs the generation of a Discretionary IOC in response to accessible quotations within the discretionary price range at away market centers. The existing rule text states that the Exchange will generate a Discretionary IOC in this instance that matches the price and size of the away market quotation within the discretionary price range. The proposed rule, by contrast, states that the Exchange will generate one or more Discretionary IOCs that will match the price of the away market quotation. The size of the Discretionary IOC(s) generated in this instance will be determined by the router to maximize execution opportunities, consistent with existing routing strategies.

Last, as explained above, the Exchange proposes to move the following existing text to the new consolidated paragraph governing procedures for handling Discretionary Orders with Routing. The text clarifies that for these Orders (as opposed to Discretionary Orders without Routing), the existing practice of randomly presenting for execution simultaneously generated Discretionary IOCs for routing is still applicable; because responsibility for this functionality is still being managed by RASH, it will not be affected by the present system changes:

> Furthermore, if a new quotation satisfies conditions that would cause the simultaneous generation of a Discretionary IOC for more than one Order with Discretion that have been assigned a Routing Order Attribute, the order in which such Discretionary IOCs are presented for execution is random, based on the respective processing time for each such Order.

[15] The Exchange notes that certain routing strategies, such as Directed Orders, do not check the Nasdaq system first before routing to other market centers.

The Exchange intends to implement the foregoing changes during the Fourth Quarter of 2021. The Exchange will issue an Equity Trader Alert at least 7 days in advance of implementing the changes.

2. Statutory Basis

The Exchange believes that its proposal is consistent with Section 6(b) of the Act,[16] in general, and furthers the objectives of Section 6(b)(5) of the Act,[17] in particular, in that it is designed to promote just and equitable principles of trade, to remove impediments to and perfect the mechanism of a free and open market and a national market system, and, in general to protect investors and the public interest.

The Exchange believes that its proposed amendments to the Discretionary Order Attribute, at Rule 4703(g), are consistent with the Act. The Exchange believes that its proposal to revise its process for handling Discretionary Orders so that they post to the Exchange Book, upon entry after checking for available interest at or better than their limit price, rather than attempt to execute against available liquidity within the discretionary price range immediately upon entry, will benefit Participants and investors because such immediate attempts at execution within the discretionary price range rarely succeed and typically result only in Discretionary Orders posting to the Book later than they would otherwise, and thus resulting in potentially lower queue priority. The proposed amendments will provide Participants with an opportunity to first secure queue priority by posting to the Book upon entry (after checking for available interest at or better than their limit price), and only generate a Discretionary IOC if and when the System later determines that liquidity within the discretionary price range is available for execution. The Exchange notes that it will still allow for Discretionary Orders to attempt to execute against available liquidity within the discretionary price range immediately upon entry if Participants select a Time-in-Force of Immediate-or-Cancel for such Orders.

Additionally, the proposal to generate Discretionary IOCs that equal the size of available liquidity within the discretionary range, rather than the full size of Discretionary Orders, will benefit participants by enabling their Discretionary Orders to maintain their queue priority on the Exchange Book when available liquidity within the discretionary price range is smaller than the full size of the Discretionary Order.

[16] 15 U.S.C. 78f(b).

[17] 15 U.S.C. 78f(b)(5).

The Exchange believes that it is consistent with the Act to amend the Rule to state that if the Discretionary IOC is not fully executed, the posted portion of the Discretionary Order will be reentered on the Nasdaq Book as a new Discretionary Order with a new timestamp and with an increased size to include the unexecuted portions of the Discretionary IOC. The Exchange believes that the proposed rule change will benefit participants by enabling their Discretionary Orders to remain executable against new incoming liquidity when available liquidity within the discretionary price range is smaller than the full size of the Discretionary Order (provided that Participants have not specified a minimum quantity for execution).

Furthermore, it is consistent with the Act to reorganize, consolidate, and otherwise amend the provisions of the existing Rule that describe procedures for handling Discretionary Orders with Routing Attributes, passive and reactive routing strategies, and pegged and non-pegged discretionary price ranges. The proposed changes will improve the clarity and readability of the Rule by eliminating unnecessary and duplicative text. It will also reflect an upgrade in the ability of the Exchange to examine its Book for both displayed and non-displayed orders against which a Discretionary Order with Routing and a pegged discretionary price range may execute (with such upgrade occurring as a product of responsibility for Discretionary Order handling migration from RASH to the Exchange's matching System). It also is consistent with the Act to clarify that for Discretionary Orders with Routing Attributes, the existing practice of randomly presenting for execution simultaneously generated Discretionary IOCs for routing still applies.

Likewise, it is consistent with the Act to modify the price at which the Exchange will generate Discretionary IOCs when, before routing a Discretionary Order with Routing, the Exchange determines that there is liquidity available on the Nasdaq Book within the discretionary price range with which the Discretionary Orders may interact. The current practice of generating a Discretionary IOC with a price equal to the price of the Order on the Nasdaq Book does not maximize the potential for executions, whereas, generating a Discretionary IOC with a price equal to the highest price for an Order to buy (lowest price for an Order to sell) within the discretionary price range allows the Discretionary IOC to

access additional liquidity at a more aggressive price in the event of a race condition where the liquidity with which the Order with Discretion is reacting is removed before the Discretionary IOC is able to execute against it.

Finally, it is consistent with the Act to amend existing rule text to state that when the Exchange generates a Discretionary IOC to attempt to execute accessible liquidity within the discretionary price range at another market center, the Exchange will generate a Discretionary IOC that will match the price of the away market quotation, but the size will be determined by the router to maximize execution opportunities, consistent with existing routing strategies. The current rule, as written, does not contemplate the scenario where the remaining size of the Order with Routing is less than the size of the away market quotation; in which case a smaller order must be routed to the quoting market, comprising the full size of the Order with Routing. The new rule text allows for this behavior, and so more clearly communicates the operation of the System to Participants. Furthermore, additional non-displayed liquidity may exist on the quoting market in excess of the displayed size of the quote. It benefits the Participant to maximize execution opportunities for their orders, so the new rule text allows the router to send orders that are larger than the size of the away market quotation. Because an Order assigned both Discretion and Routing Order Attributes is withheld or removed from the Nasdaq Book whenever a Discretionary IOC is generated, thereby yielding priority on the Nasdaq Book, there are no opportunity costs to routing additional shares in excess of the displayed quote.

*B. Self-Regulatory Organization's Statement on Burden on Competition*

The Exchange does not believe that its proposed rule changes will impose any burden on competition not necessary or appropriate in furtherance of the purposes of the Act. As a general principle, the proposed changes are reflective of the significant competition among Exchanges and non-exchange venues for order flow. In this regard, proposed changes that facilitate enhancements to the Exchange's System and order entry protocols as well as those that amend and clarify the Exchange's Rules regarding its Order Attributes, are pro-competitive because they bolster the efficiency, integrity, and overall attractiveness of the Exchange in an absolute sense and relative to its peers.

Moreover, none of the proposed changes will unduly burden intra-market competition among various Exchange participants. The Exchange's proposal to revise its processes for handling Discretionary Orders upon entry does have the potential to improve the relative queue positions of Discretionary Orders on the Exchange's Book, but these changes are warranted because existing processes are inefficient and result in opportunity costs to users of Discretionary Orders. Indeed, participants potentially lose queue priority when the System delays posting their Discretionary Orders to the Book only after making attempts to execute those Orders against liquidity within its discretionary price range immediately upon entry. Similarly, participants potentially lose queue priority whenever available liquidity within the discretionary price range is less than the size of a Discretionary IOC, and the System processes residual shares by posting them to the Book with new timestamps.

Furthermore, routing orders to away markets for only the displayed size of their quotes unnecessarily limits the opportunity for execution against non-displayed liquidity, while restricting the price of a Discretionary IOC to the price of an available order on the Nasdaq Book (as opposed to assigning the most aggressive price allowed within the discretionary range) limits opportunities for execution when race conditions cause the original order that the Discretionary IOC was created to execute against to no longer be available by the time the Discretionary IOC is received by the System. The proposed changes have the potential to increase execution opportunities, but these changes are warranted because they will equally benefit all Exchange participants utilizing the Discretion Attribute by making the processes more efficient.

Likewise, there will be no adverse competitive impact from the Exchange's proposal to examine both displayed and non-displayed orders in the Nasdaq Book (as opposed to only displayed orders, in current practice) in the scenario where the Discretionary Order with reactive routing has a pegged discretionary price range. As explained above, existing handling procedures in in this scenario a legacy of the limitations of the RASH protocol, which will no longer be applicable after the Exchange migrates responsibility from RASH to the System for handling Discretionary Orders.

For similar reasons, there will be no adverse competitive impact associated with the Exchange's proposal to present Discretionary IOCs associated with Discretionary Orders without Routing in price-time priority, rather than in random order, as is currently the case and as will remain the case for Discretionary IOCs associated with Discretionary Orders with Routing. Whereas RASH is unable to present Discretionary IOCs in time-price priority, the Exchange's system will be capable of doing so, and thus it will do so when it assumes responsibility for handling Discretionary Orders without routing. Insofar as RASH will continue to handle Discretionary Orders with Routing, existing randomized processes for presenting Discretionary IOCs associated with those Orders will continue to apply.

*C. Self-Regulatory Organization's Statement on Comments on the Proposed Rule Change Received From Members, Participants, or Others*

No written comments were either solicited or received.

## III. Date of Effectiveness of the Proposed Rule Change and Timing for Commission Action

Because the foregoing proposed rule change does not: (i) Significantly affect the protection of investors or the public interest; (ii) impose any significant burden on competition; and (iii) become operative for 30 days from the date on which it was filed, or such shorter time as the Commission may designate, it has become effective pursuant to Section 19(b)(3)(A) of the Act [18] and Rule 19b–4(f)(6) thereunder.[19]

At any time within 60 days of the filing of the proposed rule change, the Commission summarily may temporarily suspend such rule change if it appears to the Commission that such action is necessary or appropriate in the public interest, for the protection of investors, or otherwise in furtherance of the purposes of the Act. If the Commission takes such action, the Commission shall institute proceedings to determine whether the proposed rule change should be approved or disapproved.

## IV. Solicitation of Comments

Interested persons are invited to submit written data, views, and arguments concerning the foregoing,

[18] 15 U.S.C. 78s(b)(3)(A).

[19] 17 CFR 240.19b–4(f)(6). In addition, Rule 19b–4(f)(6)(iii) requires a self-regulatory organization to give the Commission written notice of its intent to file the proposed rule change, along with a brief description and text of the proposed rule change, at least five business days prior to the date of filing of the proposed rule change, or such shorter time as designated by the Commission. The Exchange has satisfied this requirement.

including whether the proposed rule change is consistent with the Act. Comments may be submitted by any of the following methods:

*Electronic Comments*

- Use the Commission's internet comment form (*http://www.sec.gov/rules/sro.shtml*); or
- Send an email to *rule-comments@sec.gov.* Please include File Number SR–NASDAQ–2021–075 on the subject line.

*Paper Comments*

- Send paper comments in triplicate to Secretary, Securities and Exchange Commission, 100 F Street NE, Washington, DC 20549–1090.

All submissions should refer to File Number SR–NASDAQ–2021–075. This file number should be included on the subject line if email is used. To help the Commission process and review your comments more efficiently, please use only one method. The Commission will post all comments on the Commission's internet website (*http://www.sec.gov/rules/sro.shtml*). Copies of the submission, all subsequent amendments, all written statements with respect to the proposed rule change that are filed with the Commission, and all written communications relating to the proposed rule change between the Commission and any person, other than those that may be withheld from the public in accordance with the provisions of 5 U.S.C. 552, will be available for website viewing and printing in the Commission's Public Reference Room, 100 F Street, NE, Washington, DC 20549, on official business days between the hours of 10:00 a.m. and 3:00 p.m. Copies of the filing also will be available for inspection and copying at the principal office of the Exchange. All comments received will be posted without change. Persons submitting comments are cautioned that we do not redact or edit personal identifying information from comment submissions. You should submit only information that you wish to make available publicly. All submissions should refer to File Number SR–NASDAQ–2021–075 and should be submitted on or before October 29, 2021.

For the Commission, by the Division of Trading and Markets, pursuant to delegated authority.[20]

**J. Matthew DeLesDernier,**

*Assistant Secretary.*

[FR Doc. 2021–21987 Filed 10–7–21; 8:45 am]

**BILLING CODE 8011–01–P**

[20] 17 CFR 200.30–3(a)(12).

## SECURITIES AND EXCHANGE COMMISSION

**[Release No. 34–93250; File No. SR–NASDAQ–2021–077]**

## Self-Regulatory Organizations; The Nasdaq Stock Market LLC; Notice of Filing and Immediate Effectiveness of Proposed Rule Change To Delay Implementation of SR–NASDAQ–2021–009

October 4, 2021.

Pursuant to Section 19(b)(1) of the Securities Exchange Act of 1934 (''Act''),[1] and Rule 19b–4 thereunder,[2] notice is hereby given that on September 29, 2021, The Nasdaq Stock Market LLC (''Nasdaq'' or ''Exchange'') filed with the Securities and Exchange Commission (''Commission'') the proposed rule change as described in Items I and II below, which Items have been prepared by the Exchange. The Commission is publishing this notice to solicit comments on the proposed rule change from interested persons.

### I. Self-Regulatory Organization's Statement of the Terms of Substance of the Proposed Rule Change

The Exchange proposes to delay implementation of SR–NASDAQ–2021–009.

The text of the proposed rule change is available on the Exchange's website at *https://listingcenter.nasdaq.com/rulebook/nasdaq/rules,* at the principal office of the Exchange, and at the Commission's Public Reference Room.]

### II. Self-Regulatory Organization's Statement of the Purpose of, and Statutory Basis for, the Proposed Rule Change

In its filing with the Commission, the Exchange included statements concerning the purpose of and basis for the proposed rule change and discussed any comments it received on the proposed rule change. The text of these statements may be examined at the places specified in Item IV below. The Exchange has prepared summaries, set forth in sections A, B, and C below, of the most significant aspects of such statements.

*A. Self-Regulatory Organization's Statement of the Purpose of, and Statutory Basis for, the Proposed Rule Change*

1. Purpose

On February 11, 2021, the Exchange filed a proposed rule change to make certain changes to the Exchange's Limit Up-Limit Down (''LULD'') closing cross, including the timing of the LULD closing cross, the process for determining the LULD closing cross price, establishing price protections for the LULD closing cross, the handling of on-close orders, and the imbalance information disseminated for the LULD closing cross.[3] The proposed rule change indicated that the Exchange would implement the new functionalities in Q3 2021.[4] The Exchange proposes to delay the implementation of these functionalities until Q4 2021. The Exchange will issue an Equity Trader Alert notifying market participants prior to implementing these functionalities. The Exchange proposes this delay to allow the Exchange additional time to test and implement these functionalities.

2. Statutory Basis

The Exchange believes that its proposal is consistent with Section 6(b) of the Act,[5] in general, and furthers the objectives of Section 6(b)(5) of the Act,[6] in particular, in that it is designed to promote just and equitable principles of trade, to remove impediments to and perfect the mechanism of a free and open market and a national market system, and, in general to protect investors and the public interest, by allowing the Exchange additional time to test and implement the LULD closing cross changes.

*B. Self-Regulatory Organization's Statement on Burden on Competition*

The Exchange does not believe that the proposed rule change will impose any burden on competition not necessary or appropriate in furtherance of the purposes of the Act. The Exchange's proposal to delay the implementation of SR–NASDAQ–2021–009 does not impose an undue burden on competition. Delaying the implementation will simply allow the Exchange additional time to properly implement SR–NASDAQ–2021–009.

*C. Self-Regulatory Organization's Statement on Comments on the Proposed Rule Change Received From Members, Participants, or Others*

No written comments were either solicited or received.

[1] 15 U.S.C. 78s(b)(1).

[2] 17 CFR 240.19b–4.

[3] *See* Securities Exchange Act Release No. 92068 (May 28, 2021), 86 FR 29864 (June 3, 2021) (SR–NASDAQ–2021–009).

[4] *Id.*

[5] 15 U.S.C. 78f(b).

[6] 15 U.S.C. 78f(b)(5).

### III. Date of Effectiveness of the Proposed Rule Change and Timing for Commission Action

Because the foregoing proposed rule change does not: (i) Significantly affect the protection of investors or the public interest; (ii) impose any significant burden on competition; and (iii) become operative for 30 days from the date on which it was filed, or such shorter time as the Commission may designate, it has become effective pursuant to Section 19(b)(3)(A) of the Act [7] and Rule 19b–4(f)(6) thereunder.[8]

A proposed rule change filed under Rule 19b–4(f)(6) [9] normally does not become operative prior to 30 days after the date of the filing. However, pursuant to Rule 19b–4(f)(6)(iii),[10] the Commission may designate a shorter time if such action is consistent with the protection of investors and the public interest. The Exchange has asked the Commission to waive the 30-day operative delay. Waiver of the operative delay would allow the Exchange to immediately delay the implementation of the new LULD closing cross functionalities and provide the Exchange additional time to test and implement these functionalities. The Commission believes that waiving the 30-day operative delay is consistent with the protection of investors and the public interest. Accordingly, the Commission hereby waives the operative delay and designates the proposed rule change operative upon filing.[11]

At any time within 60 days of the filing of the proposed rule change, the Commission summarily may temporarily suspend such rule change if it appears to the Commission that such action is necessary or appropriate in the public interest, for the protection of investors, or otherwise in furtherance of the purposes of the Act. If the Commission takes such action, the Commission shall institute proceedings to determine whether the proposed rule change should be approved or disapproved.

[7] 15 U.S.C. 78s(b)(3)(A).

[8] 17 CFR 240.19b–4(f)(6). In addition, Rule 19b–4(f)(6)(iii) requires a self-regulatory organization to give the Commission written notice of its intent to file the proposed rule change, along with a brief description and text of the proposed rule change, at least five business days prior to the date of filing of the proposed rule change, or such shorter time as designated by the Commission. The Exchange has satisfied this requirement.

[9] 17 CFR 240.19b–4(f)(6).

[10] 17 CFR 240.19b–4(f)(6)(iii).

[11] For purposes only of waiving the 30-day operative delay, the Commission also has considered the proposed rule's impact on efficiency, competition, and capital formation. *See* 15 U.S.C. 78c(f).

### IV. Solicitation of Comments

Interested persons are invited to submit written data, views and arguments concerning the foregoing, including whether the proposed rule change is consistent with the Act. Comments may be submitted by any of the following methods:

*Electronic Comments*

- Use the Commission's internet comment form (*http://www.sec.gov/rules/sro.shtml*); or
- Send an email to *rule-comments@sec.gov.* Please include File Number SR–NASDAQ–2021–077 on the subject line.

*Paper Comments*

- Send paper comments in triplicate to Secretary, Securities and Exchange Commission, 100 F Street NE, Washington, DC 20549–1090.

All submissions should refer to File Number SR–NASDAQ–2021–077. This file number should be included on the subject line if email is used. To help the Commission process and review your comments more efficiently, please use only one method. The Commission will post all comments on the Commission's internet website (*http://www.sec.gov/rules/sro.shtml*). Copies of the submission, all subsequent amendments, all written statements with respect to the proposed rule change that are filed with the Commission, and all written communications relating to the proposed rule change between the Commission and any person, other than those that may be withheld from the public in accordance with the provisions of 5 U.S.C. 552, will be available for website viewing and printing in the Commission's Public Reference Room, 100 F Street NE, Washington, DC 20549, on official business days between the hours of 10:00 a.m. and 3:00 p.m. Copies of the filing also will be available for inspection and copying at the principal office of the Exchange. All comments received will be posted without change. Persons submitting comments are cautioned that we do not redact or edit personal identifying information from comment submissions. You should submit only information that you wish to make available publicly. All submissions should refer to File Number SR–NASDAQ–2021–077 and should be submitted on or before October 29, 2021.

[12] 17 CFR 200.30–3(a)(12).

For the Commission, by the Division of Trading and Markets, pursuant to delegated authority.[12]

**J. Matthew DeLesDernier,**

*Assistant Secretary.*

[FR Doc. 2021–21992 Filed 10–7–21; 8:45 am]

**BILLING CODE 8011–01–P**

---

## SECURITIES AND EXCHANGE COMMISSION

**[Release No. 34–93251; File No. SR–MIAX–2021–47]**

## Self-Regulatory Organizations; Miami International Securities Exchange, LLC; Notice of Filing and Immediate Effectiveness of Proposed Rule Change To Permit Monday and Wednesday Expirations for Options Listed Pursuant to the Short Term Option Series Program on the iShares Russell 2000 ETF ("IWM")

October 4, 2021.

Pursuant to Section 19(b)(1) of the Securities Exchange Act of 1934 (''Act''),[1] and Rule 19b–4 thereunder,[2] notice is hereby given that on October 1, 2021, Miami International Securities Exchange, LLC (''MIAX Options'' or the ''Exchange'') filed with the Securities and Exchange Commission (''Commission'') the proposed rule change as described in Items I and II below, which Items have been prepared by the Exchange. The Commission is publishing this notice to solicit comments on the proposed rule change from interested persons.

### I. Self-Regulatory Organization's Statement of the Terms of Substance of the Proposed Rule Change

The Exchange proposes to amend Policy .02 (Short Term Option Series Program) of Exchange Rule 404, Series of Option Contracts Open for Trading, to permit Monday and Wednesday expirations for options listed pursuant to the Short Term Option Series Program (''Program'') on the iShares Russell 2000 ETF (''IWM'').

The text of the proposed rule change is available on the Exchange's website at *http://www.miaxoptions.com/rule-filings/* at MIAX Options' principal office, and at the Commission's Public Reference Room.

### II. Self-Regulatory Organization's Statement of the Purpose of, and Statutory Basis for, the Proposed Rule Change

In its filing with the Commission, the Exchange included statements

[1] 15 U.S.C. 78s(b)(1).

[2] 17 CFR 240.19b–4.

concerning the purpose of and basis for the proposed rule change and discussed any comments it received on the proposed rule change. The text of these statements may be examined at the places specified in Item IV below. The Exchange has prepared summaries, set forth in sections A, B, and C below, of the most significant aspects of such statements.

*A. Self-Regulatory Organization's Statement of the Purpose of, and Statutory Basis for, the Proposed Rule Change*

1. Purpose

The Exchange proposes to amend Policy .02 (Short Term Option Series Program) of Exchange Rule 404, Series of Option Contracts Open for Trading, to permit Monday and Wednesday expirations for options listed pursuant to the Short Term Option Series Program (''Program'') on the iShares Russell 2000 ETF (''IWM''). This is a competitive filing that is based on a proposal recently submitted by Nasdaq Phlx LLC (''Phlx'') and approved by the Securities and Exchange Commission (''Commission'').[3]

A Short Term Option Series means a series in an option class that is approved for listing and trading on the Exchange in which the series is opened for trading on any Monday, Tuesday, Wednesday, Thursday or Friday that is a business day and that expires on the Monday, Wednesday or Friday of the next business week, or, in the case of a series that is listed on a Friday and expires on a Monday, is listed one business week and one business day prior to that expiration.[4] The Exchange proposes to amend Policy .02 of Exchange Rule 404 to permit the listing of option series that expire on Mondays and Wednesdays in IWM.

Monday Expirations

As proposed, with respect to Monday IWM Expirations within Policy .02 of Rule 404, the Exchange may open for trading on any Friday or Monday that is a business day series of options on IWM to expire on any Monday of the month that is a business day and is not a Monday in which Quarterly Options Series on the same class expire (''Monday IWM Expirations''), provided that Monday IWM Expirations that are listed on a Friday must be listed at least one business week and one business day prior to the expiration. The Exchange may list up to five consecutive Monday IWM Expirations at one time; the Exchange may have no more than a total of five Monday IWM Expirations.

Wednesday Expirations

As proposed, with respect to Wednesday IWM Expirations within Policy .02 of Rule 404, the Exchange may open for trading on any Tuesday or Wednesday that is a business day series of options on IWM to expire on any Wednesday of the month that is a business day and is not a Wednesday in which Quarterly Options Series on the same class expire (''Wednesday IWM Expirations''). The Exchange may list up to five consecutive Wednesday IWM Expirations at one time; the Exchange may have no more than a total of five Wednesday IWM Expirations.

Monday and Wednesday Expirations

The interval between strike prices for the proposed Monday and Wednesday IWM Expirations will be the same as those for the current Short Term Option Series for Wednesday and Friday expirations applicable to the Program.[5] Specifically, the Monday and Wednesday IWM Expirations will have a $0.50 strike interval minimum.[6] As is the case with other equity options series listed pursuant to the Program, the Monday and Wednesday IWM Expiration series will be P.M.-settled.

Pursuant to Policy .02 of Rule 404, with respect to this Program, if Monday is not a business day the series shall expire on the first business day immediately following that Monday. This procedure differs from the expiration date of Wednesday expiration series that are scheduled to expire on a holiday. Pursuant to Policy .02 of Rule 404 a Wednesday expiration series shall expire on the first business day immediately prior to that Wednesday, *e.g.,* Tuesday of that week, if the Wednesday is not a business day. For purposes of IWM, however, the Exchange believes that it is preferable to require Monday expiration series in this scenario to expire on the Tuesday of that week rather than the previous business day (*e.g.,* the previous Friday), since the Tuesday is closer in time to the scheduled expiration date of the series than the previous Friday, and therefore may be more representative of anticipated market conditions. Monday SPY and QQQ expirations[7] are treated in this manner today. Cboe Exchange, Inc. (''Cboe'') uses the same procedure for options on the S&P 500 index (''SPX''), Mini-SPX Index Options (''XSP''), Russell 2000 Index (''RUT'') and Mini-Russell 2000 Index Options (''MRUT'') and with Monday expirations that are listed pursuant to its Nonstandard Expirations Pilot Program that are scheduled to expire on a holiday.[8] Also, Phlx[9] and Nasdaq ISE, LLC (''ISE'')[10] use the same procedure for options on the Nasdaq–100® (''NDX'') with Monday expirations that are listed pursuant to its Nonstandard Expirations Pilot Programs, respectively.

Currently, for each option class eligible for participation in the Program, the Exchange is limited to opening thirty (30) series for each expiration date for the specific class.[11] The thirty (30) series restriction does not include series that are open by other securities exchanges under their respective short term option rules; the Exchange may list these additional series that are listed by other exchanges.[12] This thirty (30) series restriction would apply to Monday and Wednesday IWM Expiration series as well. In addition, the Exchange will be able to list series that are listed by other exchanges, assuming they file similar rules with the Commission to list IWM options expiring on Mondays and Wednesdays.

Finally, the Exchange is amending Policy .02(b) of Rule 404 which addresses the listing of Short Term Option Series that expire in the same week as monthly or quarterly options series. Currently, the rule states that no Short Term Option Series may expire in the same week in which monthly option series on the same class expire (with the exception of Monday and Wednesday SPY and QQQ Expirations) or, in the case of Quarterly Options Series, no Short Term Option series may expire on the same day as an expiration of Quarterly Options Series in the same

[3] *See* Securities Exchange Act Release No. 93157 (September 28, 2021) (Approving SR–PHLX–2021–43).

[4] The term ''Short Term Option Series'' is a series in an option class that is approved for listing and trading on the Exchange in which the series is opened for trading on any Monday, Tuesday, Wednesday, Thursday or Friday that is a business day and that expires on the Monday, Wednesday or Friday of the next business week, or, in the case of a series that is listed on a Friday and expires on a Monday, is listed one business week and one business day prior to that expiration. If a Tuesday, Wednesday, Thursday or Friday is not a business day, the series may be opened (or shall expire) on the first business day immediately prior to that Tuesday, Wednesday, Thursday or Friday, respectively. For a series listed pursuant to this section for Monday expiration, if a Monday is not a business day, the series shall expire on the first business day immediately following that Monday. *See* Exchange Rule 100.

[5] *See* Policy .02(e) of Exchange Rule 404.

[6] *Id.*

[7] *See* Policy .02 of Exchange Rule 404.

[8] *See* Cboe Rule 4.13(e)(1).

[9] *See* Phlx Options 4A, Section 12(b)(5).

[10] *See* ISE Supplementary Material .07 to Options 4A, Section 12.

[11] *See* Policy .02(c) of Exchange Rule 404.

[12] *See* Exchange Rule 404A(b)(6).

class.[13] As with Monday and Wednesday SPY and QQQ Expirations, the Exchange proposes to permit Monday and Wednesday IWM Expirations to expire in the same week as monthly options series on the same class. The Exchange believes that it is reasonable to extend this exemption to Monday and Wednesday IWM Expirations because Monday and Wednesday IWM Expirations and standard monthly options will not expire on the same trading day, as standard monthly options expire on Fridays. Additionally, the Exchange believes that not listing Monday and Wednesday IWM Expirations for one week every month because there was a monthly IWM expiration on the Friday of that week would create investor confusion.

The Exchange does not believe that any market disruptions will be encountered with the introduction of P.M.-settled Monday and Wednesday IWM Expirations. The Exchange has the necessary capacity and surveillance programs in place to support and properly monitor trading in the proposed Monday and Wednesday IWM Expirations. The Exchange currently trades P.M.-settled Short Term Option Series that expire Monday and Wednesday for SPY and QQQ and has not experienced any market disruptions nor issues with capacity. Today, the Exchange has surveillance programs in place to support and properly monitor trading in Short Term Option Series that expire Monday and Wednesday for SPY and QQQ.

Similar to SPY and QQQ, the introduction of IWM Monday and Wednesday Expirations will, among other things, expand hedging tools available to market participants and continue the reduction of the premium cost of buying protection. The Exchange believes that Monday and Wednesday IWM Expirations will allow market participants to purchase IWM based on their timing as needed and allow them to tailor their investment and hedging needs more effectively.

2. Statutory Basis

The Exchange believes that its proposed rule change is consistent with Section 6(b) of the Act[14] in general, and furthers the objectives of Section 6(b)(5) of the Act[15] in particular, in that it is designed to prevent fraudulent and manipulative acts and practices, to promote just and equitable principles of trade, to foster cooperation and coordination with persons engaged in regulating, clearing, settling, processing information with respect to, and facilitating transactions in securities, to remove impediments to and perfect the mechanisms of a free and open market and a national market system and, in general, to protect investors and the public interest by providing the investing public and other market participants more flexibility to closely tailor their investment and hedging decisions in IWM options, thus allowing them to better manage their risk exposure.

In particular, the Exchange believes the Program has been successful to date and that Monday and Wednesday IWM Expirations should simply expand the ability of investors to hedge risk against market movements stemming from economic releases or market events that occur throughout the month in the same way that the Program has expanded the landscape of hedging. Similarly, the Exchange believes Monday and Wednesday IWM Expirations should create greater trading and hedging opportunities, as well as flexibility that will provide Members with the ability to tailor their investment objectives more effectively.

The Exchange currently lists Monday and Wednesday SPY and QQQ Expirations.[16] Also, Cboe currently permits Monday and Wednesday expirations for other options with a weekly expiration, such as options on SPX, XSP, RUT, and MRUT pursuant to its Nonstandard Expirations Pilot Program.[17] Phlx[18] and ISE[19] currently permit Monday and Wednesday expirations for other options with a weekly expiration on NDX pursuant to their Nonstandard Expirations Pilot Programs.

With the exception of Monday expiration series that are scheduled to expire on a holiday, there are no material differences in the treatment of Monday and Wednesday IWM Expirations for Short Term Option Series. The Exchange believes that it is consistent with the Act to treat Monday expiration series that expire on a holiday differently than Wednesday or Friday expiration series, since the proposed treatment for Monday expiration series will result in an expiration date that is closer in time to the scheduled expiration date of the series, and therefore may be more representative of anticipated market conditions. Monday SPY and QQQ expirations are treated in this manner today.[20] Cboe[21] uses the same procedure for SPX, XSP, RUT, and MRUT options with Monday expirations that are scheduled to expire on a holiday, as do Phlx[22] and ISE[23] for NDX options with Monday expirations that are listed pursuant to their Nonstandard Expirations Pilot Programs, respectively.

Given the similarities between Monday and Wednesday SPY and QQQ Expirations and the proposed Monday and Wednesday IWM Expirations, the Exchange believes that applying the provisions in Policy .02(b) of Rule 404, which currently apply to Monday and Wednesday SPY and QQQ Expirations, to Monday and Wednesday IWM Expirations is justified. For example, the Exchange believes that allowing Monday and Wednesday IWM Expirations and monthly IWM expirations in the same week will benefit investors and minimize investor confusion by providing Monday and Wednesday IWM Expirations in a continuous and uniform manner. The Exchange also believes that it is appropriate to amend Policy .02(b) of Rule 404 to clarify that no Short Term Option Series may expire on the same day as an expiration of Quarterly Options Series on the same class, same as SPY and QQQ.

The Exchange represents that it has an adequate surveillance program in place to detect manipulative trading in Monday and Wednesday expirations, including Monday and Wednesday IWM Expirations, in the same way that it monitors trading in the current Short Term Option Series and trading in Monday and Wednesday SPY and QQQ Expirations. The Exchange also represents that it has the necessary systems capacity to support the new options series. Finally, the Exchange does not believe that any market disruptions will be encountered with the introduction of Monday and Wednesday IWM Expirations.

*B. Self-Regulatory Organization's Statement on Burden on Competition*

The Exchange does not believe that the proposed rule change will impose any burden on competition that is not necessary or appropriate in furtherance of the purposes of the Act. In this regard and as indicated above, the Exchange notes that the rule change is being proposed as a competitive response to a

[13] *See* Policy .02(b) of Exchange Rule 404.

[14] 15 U.S.C. 78f(b).

[15] 15 U.S.C. 78f(b)(5).

[16] *See* Policy .02 of Exchange Rule 404.

[17] *Supra* note 8.

[18] *Supra* note 9.

[19] *Supra* note 10.

[20] *See* Policy .02(b) of Exchange Rule 404.

[21] *Supra* note 8.

[22] *Supra* note 9.

[23] *Supra* note 10.

filing submitted by Phlx.[24] The Exchange also notes that having Monday and Wednesday IWM Expirations is not a novel proposal, as Monday and Wednesday SPY and QQQ Expirations are currently listed on the Exchange.[25] Cboe uses the same procedure for SPX, XSP, RUT, and MRUT options with Monday expirations that are listed pursuant to its Nonstandard Expirations Pilot Program and that are scheduled to expire on a holiday,[26] as do Phlx [27] and ISE [28] for NDX options with Monday expirations that are listed pursuant to their Nonstandard Expirations Pilot Programs, respectively.

The Exchange does not believe the proposal will impose any burden on intra-market competition, as all market participants will be treated in the same manner under this proposal. Additionally, the Exchange does not believe the proposal will impose any burden on inter-market competition, as nothing prevents the other options exchanges from proposing similar rules to list and trade Short-Term Option Series with Monday and Wednesday expirations.

*C. Self-Regulatory Organization's Statement on Comments on the Proposed Rule Change Received From Members, Participants, or Others*

Written comments were neither solicited nor received.

## III. Date of Effectiveness of the Proposed Rule Change and Timing for Commission Action

Because the foregoing proposed rule change does not: (i) Significantly affect the protection of investors or the public interest; (ii) impose any significant burden on competition; and (iii) become operative for 30 days from the date on which it was filed, or such shorter time as the Commission may designate, it has become effective pursuant to Section 19(b)(3)(A) of the Act [29] and Rule 19b–4(f)(6) thereunder.[30]

A proposed rule change filed pursuant to Rule 19b–4(f)(6) under the Act normally does not become operative for 30 days after the date of its filing. However, Rule 19b–4(f)(6)(iii) [31] permits the Commission to designate a shorter time if such action is consistent with the protection of investors and the public interest. The Exchange has requested that the Commission waive the 30-day operative delay so that the proposal may become operative immediately upon filing. The Commission notes that it recently approved Phlx's substantially similar proposal to list and trade Monday IWM Expirations and Wednesday IWM Expirations.[32] The Exchange stated that waiver of the operative delay is consistent with the protection of investors and the public interest as it would encourage fair competition among exchanges by allowing MIAX Options to compete effectively with Phlx by having the ability to list and trade the same Monday and Wednesday IWM Expirations that Phlx is able to list and trade. For these reasons, the Commission believes that the proposed rule change presents no novel issues and that waiver of the 30-day operative delay is consistent with the protection of investors and the public interest, and will allow the Exchange to remain competitive with other exchanges. Accordingly, the Commission hereby waives the operative delay and designates the proposed rule change operative upon filing.[33]

At any time within 60 days of the filing of the proposed rule change, the Commission summarily may temporarily suspend such rule change if it appears to the Commission that such action is necessary or appropriate in the public interest, for the protection of investors, or otherwise in furtherance of the purposes of the Act. If the Commission takes such action, the Commission shall institute proceedings to determine whether the proposed rule change should be approved or disapproved.

## IV. Solicitation of Comments

Interested persons are invited to submit written data, views, and arguments concerning the foregoing, including whether the proposed rule change is consistent with the Act. Comments may be submitted by any of the following methods:

*Electronic Comments*

- Use the Commission's internet comment form (*http://www.sec.gov/rules/sro.shtml*); or
- Send an email to *rule-comments@sec.gov.* Please include File Number SR–MIAX–2021–47 on the subject line.

*Paper Comments*

- Send paper comments in triplicate to Secretary, Securities and Exchange Commission, 100 F Street NE, Washington, DC 20549–1090.

All submissions should refer to File Number SR–MIAX–2021–47. This file number should be included on the subject line if email is used. To help the Commission process and review your comments more efficiently, please use only one method. The Commission will post all comments on the Commission's internet website (*http://www.sec.gov/rules/sro.shtml*). Copies of the submission, all subsequent amendments, all written statements with respect to the proposed rule change that are filed with the Commission, and all written communications relating to the proposed rule change between the Commission and any person, other than those that may be withheld from the public in accordance with the provisions of 5 U.S.C. 552, will be available for website viewing and printing in the Commission's Public Reference Room, 100 F Street NE, Washington, DC 20549 on official business days between the hours of 10:00 a.m. and 3:00 p.m. Copies of the filing also will be available for inspection and copying at the principal office of the Exchange. All comments received will be posted without change. Persons submitting comments are cautioned that we do not redact or edit personal identifying information from comment submissions. You should submit only information that you wish to make available publicly. All submissions should refer to File Number SR–MIAX–2021–47 and should be submitted on or before October 29, 2021.

For the Commission, by the Division of Trading and Markets, pursuant to delegated authority.[34]

**J. Matthew DeLesDernier,**

*Assistant Secretary.*

[FR Doc. 2021–21984 Filed 10–7–21; 8:45 am]

BILLING CODE 8011–01–P

[24] *Supra* note 3.

[25] *See* Policy .02 of Rule 404.

[26] *Supra* note 8.

[27] *Supra* note 9.

[28] *Supra* note 10.

[29] 15 U.S.C. 78s(b)(3)(A).

[30] 17 CFR 240.19b–4(f)(6). In addition, Rule 19b–4(f)(6) requires a self-regulatory organization to give the Commission written notice of its intent to file the proposed rule change at least five business days prior to the date of filing of the proposed rule change, or such shorter time as designated by the Commission. The Exchange has satisfied this requirement.

[31] 17 CFR 240.19b–4(f)(6)(iii).

[32] *See supra* note 3.

[33] For purposes only of waiving the 30-day operative delay, the Commission has also considered the proposed rule's impact on efficiency, competition, and capital formation. *See* 15 U.S.C. 78c(f).

[34] 17 CFR 200.30–3(a)(12).

## SECURITIES AND EXCHANGE COMMISSION

**[Release No. 34–93246; File No. SR–ISE–2021–20]**

## Self-Regulatory Organizations; Nasdaq ISE, LLC; Notice of Filing and Immediate Effectiveness of Proposed Rule Change To Permit Monday and Wednesday Expirations for Options Listed Pursuant to the Short Term Option Series Program on the iShares Russell 2000 ETF

October 4, 2021.

Pursuant to Section 19(b)(1) of the Securities Exchange Act of 1934 (''Act''),[1] and Rule 19b–4 thereunder,[2] notice is hereby given that on September 30, 2021, Nasdaq ISE, LLC (''ISE'' or ''Exchange'') filed with the Securities and Exchange Commission (''Commission'') the proposed rule change as described in Items I and II below, which Items have been prepared by the Exchange. The Commission is publishing this notice to solicit comments on the proposed rule change from interested persons.

### I. Self-Regulatory Organization's Statement of the Terms of Substance of the Proposed Rule Change

The Exchange proposes to permit Monday and Wednesday expirations for options listed pursuant to the Short Term Option Series Program on the iShares Russell 2000 ETF.

The text of the proposed rule change is available on the Exchange's website at *https://listingcenter.nasdaq.com/rulebook/ise/rules,* at the principal office of the Exchange, and at the Commission's Public Reference Room.

### II. Self-Regulatory Organization's Statement of the Purpose of, and Statutory Basis for, the Proposed Rule Change

In its filing with the Commission, the Exchange included statements concerning the purpose of and basis for the proposed rule change and discussed any comments it received on the proposed rule change. The text of these statements may be examined at the places specified in Item IV below. The Exchange has prepared summaries, set forth in sections A, B, and C below, of the most significant aspects of such statements.

[1] 15 U.S.C. 78s(b)(1).

[2] 17 CFR 240.19b–4.

*A. Self-Regulatory Organization's Statement of the Purpose of, and Statutory Basis for, the Proposed Rule Change*

1. Purpose

The Exchange proposes to amend The Nasdaq Options Market LLC's (''ISE'') Rules at Options 4, Section 5 at Supplementary Material .03 to permit Monday and Wednesday expirations for options listed pursuant to the Short Term Option Series Program (''Program'') on the iShares Russell 2000 ETF (''IWM''). This rule change is similar to a rule change recently approved for Nasdaq Phlx LLC (''Phlx'').[3]

A Short Term Option Series means a series in an option class that is approved for listing and trading on the Exchange in which the series is opened for trading on any Monday, Tuesday, Wednesday, Thursday or Friday that is a business day and that expires on the Monday, Wednesday or Friday of the following business week that is a business day, or, in the case of a series that is listed on a Friday and expires on a Monday, is listed one business week and one business day prior to that expiration.[4] The Exchange proposes to amend ISE Options 4, Section 5 at Supplementary Material .03 to permit the listing of options series that expire on Mondays and Wednesdays in IWM.

Monday Expirations

As proposed, with respect to Monday IWM Expirations within Supplementary Material .03 to Options 4, Section 5, the Exchange may open for trading on any Friday or Monday that is a business day series of options on IWM to expire on any Monday of the month that is a business day and is not a Monday in which Quarterly Options Series on the same class expire (''Monday IWM Expirations''), provided that Monday IWM Expirations that are listed on a Friday must be listed at least one business week and one business day prior to the expiration. The Exchange may list up to five consecutive Monday IWM Expirations at one time; the Exchange may have no more than a total of five Monday IWM Expirations.

Wednesday Expirations

As proposed, with respect to Wednesday IWM Expirations within Supplementary Material .03 to Options 4, Section 5, the Exchange may open for trading on any Tuesday or Wednesday that is a business day series of options on IWM to expire on any Wednesday of the month that is a business day and is not a Wednesday in which Quarterly Options Series on the same class expire (''Wednesday IWM Expirations''). The Exchange may list up to five consecutive Wednesday IWM Expirations at one time; the Exchange may have no more than a total of five Wednesday IWM Expirations and a total of five Wednesday IWM Expirations will be subject to the provisions of this Rule.

Monday and Wednesday Expirations

The interval between strike prices for the proposed Monday and Wednesday IWM Expirations will be the same as those for the current Short Term Option Series for Wednesday and Friday expirations applicable to the Program.[5] Specifically, the Monday and Wednesday IWM Expirations will have a $0.50 strike interval minimum.[6] As is the case with other equity options series listed pursuant to the Program, the Monday and Wednesday IWM Expiration series will be P.M.-settled.

Pursuant to Options 1, Section 1(a)(49), with respect to the Program, if Monday is not a business day the series shall expire on the first business day immediately following that Monday. This procedure differs from the expiration date of Wednesday expiration series that are scheduled to expire on a holiday. Pursuant to Options 1, Section 1(a)(49) a Wednesday expiration series shall expire on the first business day immediately prior to that Wednesday, *e.g.,* Tuesday of that week, if the Wednesday is not a business day. For purposes of IWM, however, the Exchange believes that it is preferable to require Monday expiration series in this scenario to expire on the Tuesday of that week rather than the previous business day, *e.g.,* the previous Friday, since the Tuesday is closer in time to

[3] *See* Securities Exchange Act Release No. 93157 (September 28, 2021) (SR–PHLX–2021–43).

[4] ISE Options 1, Section 1(a)(49) provides the term ''Short Term Option Series'' means a series in an option class that is approved for listing and trading on the Exchange in which the series is opened for trading on any Monday, Tuesday, Wednesday, Thursday or Friday that is a business day and that expires on the Monday, Wednesday or Friday of the following business week that is a business day, or, in the case of a series that is listed on a Friday and expires on a Monday, is listed one business week and one business day prior to that expiration. If a Tuesday, Wednesday, Thursday or Friday is not a business day, the series may be opened (or shall expire) on the first business day immediately prior to that Tuesday, Wednesday, Thursday or Friday. For a series listed pursuant to this section for Monday expiration, if a Monday is not a business day, the series shall expire on the first business day immediately following that Monday.

[5] *See* Supplementary Material .03(e) to Options 4, Section 5.

[6] *See* Supplementary Material .03 at Options 4, Section 5.

the scheduled expiration date of the series than the previous Friday, and therefore may be more representative of anticipated market conditions. Monday SPY and QQQ expirations [7] are treated in this manner today. Cboe Exchange, Inc. (''Cboe'') uses the same procedure for options on the S&P 500 index (''SPX''), Mini-SPX Index Options (''XSP''), Russell 2000 Index (''RUT'') and Mini-Russell 200 Index Options (''MRUT'') and with Monday expirations that are listed pursuant to its Nonstandard Expirations Pilot Program and that are scheduled to expire on a holiday.[8] Also, Phlx [9] and ISE [10] use the same procedure for options on the Nasdaq–100® (''NDX'') with Monday expirations that are listed pursuant to its Nonstandard Expirations Pilot Programs, respectively.

Currently, for each option class eligible for participation in the Program, the Exchange is limited to opening thirty (30) series for each expiration date for the specific class.[11] The thirty (30) series restriction does not include series that are open by other securities exchanges under their respective short term option rules; the Exchange may list these additional series that are listed by other exchanges.[12] This thirty (30) series restriction would apply to Monday and Wednesday IWM Expiration series as well. In addition, the Exchange will be able to list series that are listed by other exchanges, assuming they file similar rules with the Securities and Exchange Commission (''Commission'') to list IWM options expiring on Mondays and Wednesdays.

Finally, the Exchange is amending Supplementary Material .03(b) to Options 4, Section 5, which addresses the listing of Short Term Options Series that expire in the same week as monthly or quarterly options series. Currently, that rule states that no Short Term Option Series may expire in the same week in which monthly option series on the same class expire (with the exception of Monday and Wednesday SPY and QQQ Expirations) or, in the case of Quarterly Options Series, on an expiration that coincides with an expiration of Quarterly Option Series on the same class.[13] As with Monday and Wednesday SPY and QQQ Expirations, the Exchange proposes to permit Monday and Wednesday IWM Expirations to expire in the same week as monthly options series on the same class. The Exchange believes that it is reasonable to extend this exemption to Monday and Wednesday IWM Expirations because Monday and Wednesday IWM Expirations and standard monthly options will not expire on the same trading day, as standard monthly options expire on Fridays. Additionally, the Exchange believes that not listing Monday and Wednesday IWM Expirations for one week every month because there was a monthly IWM expiration on the Friday of that week would create investor confusion.

The Exchange does not believe that any market disruptions will be encountered with the introduction of P.M.-settled Monday and Wednesday IWM expirations. The Exchange has the necessary capacity and surveillance programs in place to support and properly monitor trading in the proposed Monday and Wednesday IWM Expirations. The Exchange currently trades P.M.-settled Short Term Option Series that expire Monday and Wednesday for SPY and QQQ and has not experienced any market disruptions nor issues with capacity. Today, the Exchange has surveillance programs in place to support and properly monitor trading in Short Term Option Series that expire Monday and Wednesday for SPY and QQQ.

Similar to SPY and QQQ, the introduction of IWM Monday and Wednesday expirations will, among other things, expand hedging tools available to market participants and continue the reduction of the premium cost of buying protection. The Exchange believes that Monday and Wednesday IWM expirations will allow market participants to purchase IWM based on their timing as needed and allow them to tailor their investment and hedging needs more effectively.

The Exchange proposes to amend the ''.'' to a ''.'' after the title ''Short Term Options Series Program'' within Supplementary Material .03 to Options 4, Section 5.

2. Statutory Basis

The Exchange believes that the proposed rule change is consistent with Section 6(b) of the Act,[14] in general, and furthers the objectives of Section 6(b)(5) of the Act,[15] in particular, in that it is designed to promote just and equitable principles of trade, to remove impediments to and perfect the mechanism of a free and open market and a national market system, and, in general to protect investors and the public interest by providing the investing public and other market participants more flexibility to closely tailor their investment and hedging decisions in IWM options, thus allowing them to better manage their risk exposure.

In particular, the Exchange believes the Program has been successful to date and that Monday and Wednesday IWM Expirations should simply expand the ability of investors to hedge risk against market movements stemming from economic releases or market events that occur throughout the month in the same way that the Program has expanded the landscape of hedging. Similarly, the Exchange believes Monday and Wednesday IWM Expirations should create greater trading and hedging opportunities, as well as flexibility that will provide customers with the ability to tailor their investment objectives more effectively.

ISE currently lists Monday and Wednesday SPY and QQQ Expirations.[16] Also, Cboe [17] currently permits Monday and Wednesday expirations for other options with a weekly expiration, such as options on the SPX, XSP, RUT and MRUT pursuant to its Nonstandard Expirations Pilot Program. Phlx [18] and ISE [19] currently permit Monday and Wednesday expirations for other options with a weekly expiration on NDX pursuant to its Nonstandard Expirations Pilot Programs, respectively.

With the exception of Monday expiration series that are scheduled to expire on a holiday, there are no material differences in the treatment of Monday and Wednesday IWM expirations for Short Term Option Series. The Exchange believes that it is consistent with the Act to treat Monday expiration series that expire on a holiday differently than Wednesday or Friday expiration series, since the proposed treatment for Monday expiration series will result in an expiration date that is closer in time to

[7] *See* Supplementary Material .03 at Options 4, Section 5.

[8] *See* Cboe Rule 4.13(e)(1) ''. . . If the Exchange is not open for business on a respective Monday, the normally Monday expiring Weekly Expirations will expire on the following business day. If the Exchange is not open for business on a respective Wednesday or Friday, the normally Wednesday or Friday expiring Weekly Expirations will expire on the previous business day.''

[9] *See* Phlx Options 4A, Section 12(b)(5).

[10] *See* ISE Supplementary Material .07 to Options 4A, Section 12.

[11] *See* Supplementary Material .03(a) to Options 4, Section 5.

[12] *See* Supplementary Material .03(a) to Options 4, Section 5.

[13] *See* Supplementary Material .03(a) to Options 4, Section 5.

[14] 15 U.S.C. 78f(b).

[15] 15 U.S.C. 78f(b)(5).

[16] *See* Supplementary Material .03 at Options 4, Section 5.

[17] *See* note 8 above.

[18] *See* note 9 above.

[19] *See* note 10 above.

the scheduled expiration date of the series, and therefore may be more representative of anticipated market conditions. Monday SPY and QQQ expirations are treated in this manner today.[20] Cboe[21] uses the same procedure for SPX, XSP, RUT and MRUT options with Monday expirations that are listed pursuant to its Nonstandard Expirations Pilot Program and that are scheduled to expire on a holiday, as do Phlx[22] and ISE[23] for NDX options with Monday expirations that are listed pursuant to their Nonstandard Expirations Pilot Programs, respectively.

Given the similarities between Monday and Wednesday SPY and QQQ Expirations and the proposed Monday and Wednesday IWM Expirations, the Exchange believes that applying the provisions in Supplementary Material .03 to Options 4, Section 5, which currently apply to Monday and Wednesday SPY and QQQ Expirations, to Monday and Wednesday IWM Expirations is justified. For example, the Exchange believes that allowing Monday and Wednesday IWM Expirations and monthly IWM expirations in the same week will benefit investors and minimize investor confusion by providing Monday and Wednesday IWM Expirations in a continuous and uniform manner. The Exchange also believes that is appropriate to amend Supplementary Material .03(b) to Options 4, Section 5 to clarify that no Short Term Option Series may expire on the same day as an expiration of Quarterly Option Series on the same class, same as SPY and QQQ.

The Exchange represents that it has an adequate surveillance program in place to detect manipulative trading in Monday and Wednesday expirations, including Monday and Wednesday IWM Expirations, in the same way that it monitors trading in the current Short Term Option Series and trading in Monday and Wednesday SPY and QQQ Expirations. The Exchange also represents that it has the necessary systems capacity to support the new options series. Finally, the Exchange does not believe that any market disruptions will be encountered with the introduction of Monday and Wednesday IWM expirations.

The Exchange's proposal to amend the ''.'' to a ''.'' after the title ''Short Term Options Series Program'' within Supplementary Material .03 to Options 4, Section 5 is a non-substantive technical amendment.

*B. Self-Regulatory Organization's Statement on Burden on Competition*

The Exchange does not believe that the proposed rule change will impose any burden on competition that is not necessary or appropriate in furtherance of the purposes of the Act. The Exchange notes that having Monday and Wednesday IWM expirations is not a novel proposal, as Monday and Wednesday SPY and QQQ Expirations are currently listed on ISE.[24] Cboe[25] uses the same procedure for SPX, XSP, RUT and MRUT options with Monday expirations that are listed pursuant to its Nonstandard Expirations Pilot Program and that are scheduled to expire on a holiday, as do Phlx[26] and ISE[27] for NDX options with Monday expirations that are listed pursuant to their Nonstandard Expirations Pilot Programs, respectively.

The Exchange does not believe the proposal will impose any burden on intra-market competition, as all market participants will be treated in the same manner under this proposal. Additionally, the Exchange does not believe the proposal will impose any burden on inter-market competition, as nothing prevents the other options exchanges from proposing similar rules to list and trade Short-Term Option Series with Monday and Wednesday expirations.

*C. Self-Regulatory Organization's Statement on Comments on the Proposed Rule Change Received From Members, Participants, or Others*

No written comments were either solicited or received.

## III. Date of Effectiveness of the Proposed Rule Change and Timing for Commission Action

Because the foregoing proposed rule change does not: (i) Significantly affect the protection of investors or the public interest; (ii) impose any significant burden on competition; and (iii) become operative for 30 days from the date on which it was filed, or such shorter time as the Commission may designate, it has become effective pursuant to Section 19(b)(3)(A) of the Act[28] and Rule 19b–4(f)(6) thereunder.[29]

A proposed rule change filed pursuant to Rule 19b–4(f)(6) under the Act normally does not become operative for 30 days after the date of its filing. However, Rule 19b–4(f)(6)(iii)[30] permits the Commission to designate a shorter time if such action is consistent with the protection of investors and the public interest. The Exchange has requested that the Commission waive the 30-day operative delay so that the proposal may become operative immediately upon filing. The Commission notes that it recently approved Phlx's substantially similar proposal to list and trade Monday IWM Expirations and Wednesday IWM Expirations.[31] The Exchange has stated that waiver of the operative delay will permit the Exchange to immediately amend ISE Options 4, Section 5 at Supplementary Material .03 to permit the Exchange to offer Monday and Wednesday expirations for options listed pursuant to the Program on IWM similar to Phlx. For these reasons, the Commission believes that the proposed rule change presents no novel issues and that waiver of the 30-day operative delay is consistent with the protection of investors and the public interest, and will allow the Exchange to remain competitive with other exchanges. Accordingly, the Commission hereby waives the operative delay and designates the proposed rule change operative upon filing.[32]

At any time within 60 days of the filing of the proposed rule change, the Commission summarily may temporarily suspend such rule change if it appears to the Commission that such action is necessary or appropriate in the public interest, for the protection of investors, or otherwise in furtherance of the purposes of the Act. If the Commission takes such action, the Commission shall institute proceedings to determine whether the proposed rule change should be approved or disapproved.

## IV. Solicitation of Comments

Interested persons are invited to submit written data, views, and arguments concerning the foregoing, including whether the proposed rule change is consistent with the Act.

[20] *See* Supplementary Material .03 at Options 4, Section 5.

[21] *See* note 8 above.

[22] *See* note 9 above.

[23] *See* note 10 above.

[24] *See* Supplementary Material .03 at Options 4, Section 5.

[25] *See* note 8 above.

[26] *See* note 9 above.

[27] *See* note 10 above.

[28] 15 U.S.C. 78s(b)(3)(A).

[29] 17 CFR 240.19b–4(f)(6). In addition, Rule 19b–4(f)(6) requires a self-regulatory organization to give the Commission written notice of its intent to file the proposed rule change at least five business days prior to the date of filing of the proposed rule change, or such shorter time as designated by the Commission. The Exchange has satisfied this requirement.

[30] 17 CFR 240.19b–4(f)(6)(iii).

[31] *See supra* note 3.

[32] For purposes only of waiving the 30-day operative delay, the Commission has also considered the proposed rule's impact on efficiency, competition, and capital formation. *See* 15 U.S.C. 78c(f).

Comments may be submitted by any of the following methods:

*Electronic Comments*

- Use the Commission's internet comment form (*http://www.sec.gov/rules/sro.shtml*); or
- Send an email to *rule-comments@sec.gov*. Please include File Number SR–ISE–2021–20 on the subject line.

*Paper Comments*

- Send paper comments in triplicate to Secretary, Securities and Exchange Commission, 100 F Street NE, Washington, DC 20549–1090.

All submissions should refer to File Number SR–ISE–2021–20. This file number should be included on the subject line if email is used. To help the Commission process and review your comments more efficiently, please use only one method. The Commission will post all comments on the Commission's internet website (*http://www.sec.gov/rules/sro.shtml*). Copies of the submission, all subsequent amendments, all written statements with respect to the proposed rule change that are filed with the Commission, and all written communications relating to the proposed rule change between the Commission and any person, other than those that may be withheld from the public in accordance with the provisions of 5 U.S.C. 552, will be available for website viewing and printing in the Commission's Public Reference Room, 100 F Street NE, Washington, DC 20549 on official business days between the hours of 10:00 a.m. and 3:00 p.m. Copies of the filing also will be available for inspection and copying at the principal office of the Exchange. All comments received will be posted without change. Persons submitting comments are cautioned that we do not redact or edit personal identifying information from comment submissions. You should submit only information that you wish to make available publicly. All submissions should refer to File Number SR–ISE–2021–20 and should be submitted on or before October 29, 2021.

For the Commission, by the Division of Trading and Markets, pursuant to delegated authority.[33]

**J. Matthew DeLesDernier,**

*Assistant Secretary.*

[FR Doc. 2021–21983 Filed 10–7–21; 8:45 am]

**BILLING CODE 8011–01–P**

[33] 17 CFR 200.30–3(a)(12).

## SECURITIES AND EXCHANGE COMMISSION

**[Release No. 34–93248; File No. SR–BX–2021–043]**

## Self-Regulatory Organizations; Nasdaq BX, Inc.; Notice of Filing and Immediate Effectiveness of Proposed Rule Change to Proposal To Permit Monday and Wednesday Expirations for Options Listed Pursuant to the Short Term Option Series Program on the iShares Russell 2000 ETF

October 4, 2021.

Pursuant to Section 19(b)(1) of the Securities Exchange Act of 1934 (''Act''),[1] and Rule 19b–4 thereunder,[2] notice is hereby given that on September 30, 2021, Nasdaq BX, Inc. (''BX'' or ''Exchange'') filed with the Securities and Exchange Commission (''Commission'') the proposed rule change as described in Items I and II below, which Items have been prepared by the Exchange. The Commission is publishing this notice to solicit comments on the proposed rule change from interested persons.

### I. Self-Regulatory Organization's Statement of the Terms of Substance of the Proposed Rule Change

The Exchange proposes to permit Monday and Wednesday expirations for options listed pursuant to the Short Term Option Series Program on the iShares Russell 2000 ETF.

The text of the proposed rule change is available on the Exchange's website at *https://listingcenter.nasdaq.com/rulebook/bx/rules,* at the principal office of the Exchange, and at the Commission's Public Reference Room.

### II. Self-Regulatory Organization's Statement of the Purpose of, and Statutory Basis for, the Proposed Rule Change

In its filing with the Commission, the Exchange included statements concerning the purpose of and basis for the proposed rule change and discussed any comments it received on the proposed rule change. The text of these statements may be examined at the places specified in Item IV below. The Exchange has prepared summaries, set forth in sections A, B, and C below, of the most significant aspects of such statements.

[1] 15 U.S.C. 78s(b)(1).

[2] 17 CFR 240.19b–4.

*A. Self-Regulatory Organization's Statement of the Purpose of, and Statutory Basis for, the Proposed Rule Change*

1. Purpose

The Exchange proposes to amend BX Options 4, Section 5 at Supplementary Material .03 to permit Monday and Wednesday expirations for options listed pursuant to the Short Term Option Series Program (''Program'') on the iShares Russell 2000 ETF (''IWM''). This rule change is similar to a rule change recently approved for Nasdaq Phlx LLC (''Phlx'').[3]

A Short Term Option Series means a series in an option class that is approved for listing and trading on the Exchange in which the series is opened for trading on any Monday, Tuesday, Wednesday, Thursday or Friday that is a business day and that expires on the Monday, Wednesday or Friday of the next business week, or, in the case of a series that is listed on a Friday and expires on a Monday, is listed one business week and one business day prior to that expiration.[4] The Exchange proposes to amend BX Options 4, Section 5 at Supplementary Material .03 to permit the listing of options series that expire on Mondays and Wednesdays in IWM.

Monday Expirations

As proposed, with respect to Monday IWM Expirations within Supplementary Material .03 to Options 4, Section 5, the Exchange may open for trading on any Friday or Monday that is a business day series of options on IWM to expire on any Monday of the month that is a business day and is not a Monday in which Quarterly Options Series on the same class expire (''Monday IWM Expirations''), provided that Monday IWM Expirations that are listed on a Friday must be listed at least one business week and one business day prior to the expiration. The Exchange

[3] *See* Securities Exchange Act Release No. 93157 (September 28, 2021) (SR–PHLX–2021–43).

[4] BX Options 1, Section 1(a)(58) provides the term ''Short Term Option Series'' means a series in an option class that is approved for listing and trading on the Exchange in which the series is opened for trading on any Monday, Tuesday, Wednesday, Thursday or Friday that is a business day and that expires on the Monday, Wednesday or Friday of the next business week, or, in the case of a series that is listed on a Friday and expires on a Monday, is listed one business week and one business day prior to that expiration. If a Tuesday, Wednesday, Thursday or Friday is not a business day, the series may be opened (or shall expire) on the first business day immediately prior to that Tuesday, Wednesday, Thursday or Friday, respectively. For a series listed pursuant to this Rule for Monday expiration, if a Monday is not a business day, the series shall expire on the first business day immediately following that Monday.

may list up to five consecutive Monday IWM Expirations at one time; the Exchange may have no more than a total of five Monday IWM Expirations.

Wednesday Expirations

As proposed, with respect to Wednesday IWM Expirations within Supplementary Material .03 to Options 4, Section 5, the Exchange may open for trading on any Tuesday or Wednesday that is a business day series of options on IWM to expire on any Wednesday of the month that is a business day and is not a Wednesday in which Quarterly Options Series on the same class expire (''Wednesday IWM Expirations''). The Exchange may list up to five consecutive Wednesday IWM Expirations at one time; the Exchange may have no more than a total of five Wednesday IWM Expirations and a total of five Wednesday IWM Expirations will be subject to the provisions of this Rule.

Monday and Wednesday Expirations

The interval between strike prices for the proposed Monday and Wednesday IWM Expirations will be the same as those for the current Short Term Option Series for Wednesday and Friday expirations applicable to the Program.[5] Specifically, the Monday and Wednesday IWM Expirations will have a $0.50 strike interval minimum.[6] As is the case with other equity options series listed pursuant to the Program, the Monday and Wednesday IWM Expiration series will be P.M.-settled.

Pursuant to Options 1, Section 1(a)(58), with respect to the Program, if Monday is not a business day the series shall expire on the first business day immediately following that Monday. This procedure differs from the expiration date of Wednesday expiration series that are scheduled to expire on a holiday. Pursuant to Options 1, Section 1(a)(58) a Wednesday expiration series shall expire on the first business day immediately prior to that Wednesday, *e.g.,* Tuesday of that week, if the Wednesday is not a business day. For purposes of IWM, however, the Exchange believes that it is preferable to require Monday expiration series in this scenario to expire on the Tuesday of that week rather than the previous business day, *e.g.,* the previous Friday, since the Tuesday is closer in time to the scheduled expiration date of the series than the previous Friday, and therefore may be more representative of anticipated market conditions. Monday SPY and QQQ expirations[7] are treated in this manner today. Cboe Exchange, Inc. (''Cboe'') uses the same procedure for options on the S&P 500 index (''SPX''), Mini-SPX Index Options (''XSP''), Russell 2000 Index (''RUT'') and Mini-Russell 200 Index Options (''MRUT'') and with Monday expirations that are listed pursuant to its Nonstandard Expirations Pilot Program and that are scheduled to expire on a holiday.[8] Also, Phlx[9] and Nasdaq ISE, LLC (''ISE'')[10] use the same procedure for options on the Nasdaq-100® (''NDX'') with Monday expirations that are listed pursuant to its Nonstandard Expirations Pilot Programs, respectively.

Currently, for each option class eligible for participation in the Program, the Exchange is limited to opening thirty (30) series for each expiration date for the specific class.[11] The thirty (30) series restriction does not include series that are open by other securities exchanges under their respective short term option rules; the Exchange may list these additional series that are listed by other exchanges.[12] This thirty (30) series restriction would apply to Monday and Wednesday IWM Expiration series as well. In addition, the Exchange will be able to list series that are listed by other exchanges, assuming they file similar rules with the Securities and Exchange Commission (''Commission'') to list IWM options expiring on Mondays and Wednesdays.

Finally, the Exchange is amending Supplementary Material .03(b) to Options 4, Section 5, which addresses the listing of Short Term Options Series that expire in the same week as monthly or quarterly options series. Currently, that rule states that no Short Term Option Series may expire in the same week in which monthly option series on the same class expire (with the exception of Monday and Wednesday SPY and QQQ Expirations) or, in the case of Quarterly Options Series, on an expiration that coincides with an expiration of Quarterly Option Series on the same class.[13] As with Monday and Wednesday SPY and QQQ Expirations, the Exchange proposes to permit Monday and Wednesday IWM Expirations to expire in the same week as monthly options series on the same class. The Exchange believes that it is reasonable to extend this exemption to Monday and Wednesday IWM Expirations because Monday and Wednesday IWM Expirations and standard monthly options will not expire on the same trading day, as standard monthly options expire on Fridays. Additionally, the Exchange believes that not listing Monday and Wednesday IWM Expirations for one week every month because there was a monthly IWM expiration on the Friday of that week would create investor confusion.

The Exchange does not believe that any market disruptions will be encountered with the introduction of P.M.-settled Monday and Wednesday IWM expirations. The Exchange has the necessary capacity and surveillance programs in place to support and properly monitor trading in the proposed Monday and Wednesday IWM Expirations. The Exchange currently trades P.M.-settled Short Term Option Series that expire Monday and Wednesday for SPY and QQQ and has not experienced any market disruptions nor issues with capacity. Today, the Exchange has surveillance programs in place to support and properly monitor trading in Short Term Option Series that expire Monday and Wednesday for SPY and QQQ.

Similar to SPY and QQQ, the introduction of IWM Monday and Wednesday expirations will, among other things, expand hedging tools available to market participants and continue the reduction of the premium cost of buying protection. The Exchange believes that Monday and Wednesday IWM expirations will allow market participants to purchase IWM based on their timing as needed and allow them to tailor their investment and hedging needs more effectively.

The Exchange proposes to amend the '':'' to a ''.'' after the title ''Short Term Options Series Program'' within Supplementary Material .03 to Options 4, Section 5.

2. Statutory Basis

The Exchange believes that the proposed rule change is consistent with Section 6(b) of the Act,[14] in general, and furthers the objectives of Section 6(b)(5)

[5] *See* Supplementary Material .03(e) to Options 4, Section 5.

[6] *See* Supplementary Material .03 at Options 4, Section 5.

[7] *See* Supplementary Material .03 at Options 4, Section 5.

[8] *See* Cboe Rule 4.13(e)(1) ''. . . If the Exchange is not open for business on a respective Monday, the normally Monday expiring Weekly Expirations will expire on the following business day. If the Exchange is not open for business on a respective Wednesday or Friday, the normally Wednesday or Friday expiring Weekly Expirations will expire on the previous business day.''

[9] *See* Phlx Options 4A, Section 12(b)(5).

[10] *See* ISE Supplementary Material .07 to Options 4A, Section 12.

[11] *See* Supplementary Material .03(a) to Options 4, Section 5.

[12] *See* Supplementary Material .03(a) to Options 4, Section 5.

[13] *See* Supplementary Material .03(a) to Options 4, Section 5.

[14] 15 U.S.C. 78f(b).

of the Act,[15] in particular, in that it is designed to promote just and equitable principles of trade, to remove impediments to and perfect the mechanism of a free and open market and a national market system, and, in general to protect investors and the public interest by providing the investing public and other market participants more flexibility to closely tailor their investment and hedging decisions in IWM options, thus allowing them to better manage their risk exposure.

In particular, the Exchange believes the Program has been successful to date and that Monday and Wednesday IWM Expirations should simply expand the ability of investors to hedge risk against market movements stemming from economic releases or market events that occur throughout the month in the same way that the Program has expanded the landscape of hedging. Similarly, the Exchange believes Monday and Wednesday IWM Expirations should create greater trading and hedging opportunities, as well as flexibility that will provide customers with the ability to tailor their investment objectives more effectively.

BX currently lists Monday and Wednesday SPY and QQQ Expirations.[16] Also, Cboe[17] currently permits Monday and Wednesday expirations for other options with a weekly expiration, such as options on the SPX, XSP, RUT and MRUT pursuant to its Nonstandard Expirations Pilot Program. Phlx[18] and ISE[19] currently permit Monday and Wednesday expirations for other options with a weekly expiration on NDX pursuant to its Nonstandard Expirations Pilot Programs, respectively.

With the exception of Monday expiration series that are scheduled to expire on a holiday, there are no material differences in the treatment of Monday and Wednesday IWM expirations for Short Term Option Series. The Exchange believes that it is consistent with the Act to treat Monday expiration series that expire on a holiday differently than Wednesday or Friday expiration series, since the proposed treatment for Monday expiration series will result in an expiration date that is closer in time to the scheduled expiration date of the series, and therefore may be more representative of anticipated market conditions. Monday SPY and QQQ expirations are treated in this manner today.[20] Cboe[21] uses the same procedure for SPX, XSP, RUT and MRUT options with Monday expirations that are listed pursuant to its Nonstandard Expirations Pilot Program and that are scheduled to expire on a holiday, as do Phlx[22] and ISE[23] for NDX options with Monday expirations that are listed pursuant to their Nonstandard Expirations Pilot Programs, respectively.

Given the similarities between Monday and Wednesday SPY and QQQ Expirations and the proposed Monday and Wednesday IWM Expirations, the Exchange believes that applying the provisions in Supplementary Material .03 to Options 4, Section 5, which currently apply to Monday and Wednesday SPY and QQQ Expirations, to Monday and Wednesday IWM Expirations is justified. For example, the Exchange believes that allowing Monday and Wednesday IWM Expirations and monthly IWM expirations in the same week will benefit investors and minimize investor confusion by providing Monday and Wednesday IWM Expirations in a continuous and uniform manner. The Exchange also believes that is appropriate to amend Supplementary Material .03(b) to Options 4, Section 5 to clarify that no Short Term Option Series may expire on the same day as an expiration of Quarterly Option Series on the same class, same as SPY and QQQ.

The Exchange represents that it has an adequate surveillance program in place to detect manipulative trading in Monday and Wednesday expirations, including Monday and Wednesday IWM Expirations, in the same way that it monitors trading in the current Short Term Option Series and trading in Monday and Wednesday SPY and QQQ Expirations. The Exchange also represents that it has the necessary systems capacity to support the new options series. Finally, the Exchange does not believe that any market disruptions will be encountered with the introduction of Monday and Wednesday IWM expirations.

The Exchange's proposal to amend the '':'' to a ''.'' after the title ''Short Term Options Series Program'' within Supplementary Material .03 to Options 4, Section 5 is a non-substantive technical amendment.

*B. Self-Regulatory Organization's Statement on Burden on Competition*

The Exchange does not believe that the proposed rule change will impose any burden on competition that is not necessary or appropriate in furtherance of the purposes of the Act. The Exchange notes that having Monday and Wednesday IWM expirations is not a novel proposal, as Monday and Wednesday SPY and QQQ Expirations are currently listed on BX.[24] Cboe[25] uses the same procedure for SPX, XSP, RUT and MRUT options with Monday expirations that are listed pursuant to its Nonstandard Expirations Pilot Program and that are scheduled to expire on a holiday, as do Phlx[26] and ISE[27] for NDX options with Monday expirations that are listed pursuant to their Nonstandard Expirations Pilot Programs, respectively.

*C. Self-Regulatory Organization's Statement on Comments on the Proposed Rule Change Received From Members, Participants, or Others*

No written comments were either solicited or received.

**III. Date of Effectiveness of the Proposed Rule Change and Timing for Commission Action**

Because the foregoing proposed rule change does not: (i) Significantly affect the protection of investors or the public interest; (ii) impose any significant burden on competition; and (iii) become operative for 30 days from the date on which it was filed, or such shorter time as the Commission may designate, it has become effective pursuant to Section 19(b)(3)(A) of the Act[28] and Rule 19b–4(f)(6) thereunder.[29]

A proposed rule change filed pursuant to Rule 19b–4(f)(6) under the Act normally does not become operative for 30 days after the date of its filing. However, Rule 19b–4(f)(6)(iii)[30] permits the Commission to designate a shorter time if such action is consistent with the protection of investors and the public interest. The Exchange has requested that the Commission waive the 30-day operative delay so that the proposal may

[15] 15 U.S.C. 78f(b)(5).

[16] *See* Supplementary Material .03 at Options 4, Section 5.

[17] *See* note 8 above.

[18] *See* note 9 above.

[19] *See* note 10 above.

[20] *See* Supplementary Material .03 at Options 4, Section 5.

[21] *See* note 8 above.

[22] *See* note 9 above.

[23] *See* note 10 above.

[24] *See* Supplementary Material .03 at Options 4, Section 5.

[25] *See* note 8 above.

[26] *See* note 9 above.

[27] *See* note 10 above.

[28] 15 U.S.C. 78s(b)(3)(A).

[29] 17 CFR 240.19b–4(f)(6). In addition, Rule 19b–4(f)(6) requires a self-regulatory organization to give the Commission written notice of its intent to file the proposed rule change at least five business days prior to the date of filing of the proposed rule change, or such shorter time as designated by the Commission. The Exchange has satisfied this requirement.

[30] 17 CFR 240.19b–4(f)(6)(iii).

become operative immediately upon filing. The Commission notes that it recently approved Phlx's substantially similar proposal to list and trade Monday IWM Expirations and Wednesday IWM Expirations.[31] The Exchange has stated that waiver of the operative delay will permit the Exchange to immediately amend BX Options 4, Section 5 at Supplementary Material .03 to permit the Exchange to offer Monday and Wednesday expirations for options listed pursuant to the Program on IWM similar to Phlx. For these reasons, the Commission believes that the proposed rule change presents no novel issues and that waiver of the 30-day operative delay is consistent with the protection of investors and the public interest, and will allow the Exchange to remain competitive with other exchanges. Accordingly, the Commission hereby waives the operative delay and designates the proposed rule change operative upon filing.[32]

At any time within 60 days of the filing of the proposed rule change, the Commission summarily may temporarily suspend such rule change if it appears to the Commission that such action is necessary or appropriate in the public interest, for the protection of investors, or otherwise in furtherance of the purposes of the Act. If the Commission takes such action, the Commission shall institute proceedings to determine whether the proposed rule change should be approved or disapproved.

## IV. Solicitation of Comments

Interested persons are invited to submit written data, views, and arguments concerning the foregoing, including whether the proposed rule change is consistent with the Act. Comments may be submitted by any of the following methods:

*Electronic Comments*

- Use the Commission's internet comment form (*http://www.sec.gov/rules/sro.shtml*); or
- Send an email to *rule-comments@sec.gov.* Please include File Number SR–BX–2021–043 on the subject line.

*Paper Comments*

- Send paper comments in triplicate to Secretary, Securities and Exchange Commission, 100 F Street NE, Washington, DC 20549–1090.

All submissions should refer to File Number SR–BX–2021–043. This file number should be included on the subject line if email is used. To help the Commission process and review your comments more efficiently, please use only one method. The Commission will post all comments on the Commission's internet website (*http://www.sec.gov/rules/sro.shtml*). Copies of the submission, all subsequent amendments, all written statements with respect to the proposed rule change that are filed with the Commission, and all written communications relating to the proposed rule change between the Commission and any person, other than those that may be withheld from the public in accordance with the provisions of 5 U.S.C. 552, will be available for website viewing and printing in the Commission's Public Reference Room, 100 F Street NE, Washington, DC 20549 on official business days between the hours of 10:00 a.m. and 3:00 p.m. Copies of the filing also will be available for inspection and copying at the principal office of the Exchange. All comments received will be posted without change. Persons submitting comments are cautioned that we do not redact or edit personal identifying information from comment submissions. You should submit only information that you wish to make available publicly. All submissions should refer to File Number SR–BX–2021–043 and should be submitted on or before October 29, 2021.

For the Commission, by the Division of Trading and Markets, pursuant to delegated authority.[33]

**J. Matthew DeLesDernier,**

*Assistant Secretary.*

[FR Doc. 2021–21995 Filed 10–7–21; 8:45 am]

**BILLING CODE 8011–01–P**

[31] *See supra* note 3.

[32] For purposes only of waiving the 30-day operative delay, the Commission has also considered the proposed rule's impact on efficiency, competition, and capital formation. *See* 15 U.S.C. 78c(f).

[33] 17 CFR 200.30–3(a)(12).

## SECURITIES AND EXCHANGE COMMISSION

**[Release No. 34–93247; File No. SR–BOX–2021–23]**

## Self-Regulatory Organizations; BOX Exchange LLC; Notice of Filing and Immediate Effectiveness of Proposed Rule Change To Permit Monday and Wednesday Expirations for Options Listed Pursuant to the Short Term Option Series Program on the iShares Russell 2000 ETF

October 4, 2021.

Pursuant to Section 19(b)(1) of the Securities Exchange Act of 1934 (''Act''),[1] and Rule 19b–4 thereunder,[2] notice is hereby given that on September 29, 2021, BOX Exchange LLC (the ''Exchange'') filed with the Securities and Exchange Commission (''Commission'') the proposed rule change as described in Items I and II below, which Items have been prepared by the self-regulatory organization. The Commission is publishing this notice to solicit comments on the proposed rule from interested persons.

### I. Self-Regulatory Organization's Statement of the Terms of Substance of the Proposed Rule Change

The Exchange proposes to amend BOX Rule IM–5050–6 (Short Term Option Series Program) to permit Monday and Wednesday expirations for options listed pursuant to the Short Term Option Series Program on the iShares Russell 2000 ETF. The text of the proposed rule change is available from the principal office of the Exchange, at the Commission's Public Reference Room and also on the Exchange's internet website at *http://boxoptions.com.*

### II. Self-Regulatory Organization's Statement of the Purpose of, and Statutory Basis for, the Proposed Rule Change

In its filing with the Commission, the self-regulatory organization included statements concerning the purpose of, and basis for, the proposed rule change and discussed any comments it received on the proposed rule change. The text of these statements may be examined at the places specified in Item IV below. The self-regulatory organization has prepared summaries, set forth in Sections A, B, and C below, of the most significant aspects of such statements.

[1] 15 U.S.C. 78s(b)(1).

[2] 17 CFR 240.19b–4.

*A. Self-Regulatory Organization's Statement of the Purpose of, and Statutory Basis for, the Proposed Rule Change*

1. Purpose

The Exchange proposes to amend IM–5050–6 to permit Monday and Wednesday expirations for options listed pursuant to the Short Term Option Series Program (''Program'') on the iShares Russell 2000 ETF (''IWM''). This is a competitive filing that is based on a proposal recently submitted by Nasdaq Phlx LLC (''Phlx'') and approved by the Securities and Exchange Commission (''Commission'').[3]

A Short Term Option Series means a series in an option class that is approved for listing and trading on the Exchange in which the series is opened for trading on any Monday, Tuesday, Wednesday, Thursday or Friday that is a business day and that expires on the Monday, Wednesday or Friday of the next business week, or, in the case of a series that is listed on a Friday and expires on a Monday, is listed one business week and one business day prior to that expiration.[4] The Exchange proposes to amend IM–5050–6 to permit the listing of options series that expire on Mondays and Wednesdays in IWM.

Monday Expirations

As proposed, with respect to Monday IWM Expirations within IM–5050–6(d), the Exchange may open for trading on any Friday or Monday that is a business day series of options on IWM to expire on any Monday of the month that is a business day and is not a Monday in which Quarterly Options Series on the same class expire (''Monday IWM Expirations''), provided that Monday IWM Expirations that are listed on a Friday must be listed at least one business week and one business day prior to the expiration. The Exchange may list up to five consecutive Monday IWM Expirations at one time; the Exchange may have no more than a total of five Monday IWM Expirations.

Wednesday Expirations

As proposed, with respect to Wednesday IWM Expirations within IM–5050–6(c), the Exchange may open for trading on any Tuesday or Wednesday that is a business day series of options on IWM to expire on any Wednesday of the month that is a business day and is not a Wednesday in which Quarterly Options Series on the same class expire (''Wednesday IWM Expirations''). The Exchange may list up to five consecutive Wednesday IWM Expirations at one time; the Exchange may have no more than a total of five Wednesday IWM Expirations and a total of five Wednesday IWM Expirations.

Monday and Wednesday Expirations

The interval between strike prices for the proposed Monday and Wednesday IWM Expirations will be the same as those for the current Short Term Option Series for Wednesday and Friday expirations applicable to the Program.[5] Specifically, the Monday and Wednesday IWM Expirations will have a $0.50 strike interval minimum.[6] As is the case with other equity options series listed pursuant to the Program, the Monday and Wednesday IWM Expiration series will be P.M.-settled.

Pursuant to BOX Rule 100(a)(65), with respect to the Program, if Monday i not a business day the series shall expire on the first business day immediately following that Monday. This procedure differs from the expiration date of Wednesday expiration series that are scheduled to expire on a holiday. Pursuant to BOX Rule100(a)(65), a Wednesday expiration series shall expire on the first business day immediately prior to that Wednesday, *e.g.,* Tuesday of that week, if the Wednesday is not a business day. For purposes of IWM, however, the Exchange believes that it is preferable to require Monday expiration series in this scenario to expire on the Tuesday of that week rather than the previous business day, *e.g.,* the previous Friday, since the Tuesday is closer in time to the scheduled expiration date of the series than the previous Friday, and therefore may be more representative of anticipated market conditions. Monday SPY and QQQ expirations[7] are treated in this manner today. Cboe Exchange, Inc. (''Cboe'') uses the same procedure for options on the S&P 500 index (''SPX''), Mini-SPX Index Options (''XSP''), Russell 2000 Index (''RUT'') and Mini-Russell 200 Index Options (''MRUT'') and with Monday expirations that are listed pursuant to its Nonstandard Expirations Pilot Program and that are scheduled to expire on a holiday.[8] Also, Phlx[9] and Nasdaq ISE, LLC (''ISE'')[10] use the same procedure for options on the Nasdaq-100® (''NDX'') with Monday expirations that are listed pursuant to its Nonstandard Expirations Pilot Programs, respectively.

Currently, for each option class eligible for participation in the Program, the Exchange is limited to opening thirty (30) series for each expiration date for the specific class.[11] The thirty (30) series restriction does not include series that are open by other securities exchanges under their respective short term option rules; the Exchange may list these additional series that are listed by other exchanges.[12] This thirty (30) series restriction would apply to Monday and Wednesday IWM Expiration series as well. In addition, the Exchange will be able to list series that are listed by other exchanges, assuming they file similar rules with the Commission to list IWM options expiring on Mondays and Wednesdays.

Finally, the Exchange is amending IM–5050–6(b)(2), which addresses the listing of Short Term Option Series that expire in the same week as monthly or quarterly options series. Currently, that rule states that no Short Term Option Series may expire in the same week in which monthly option series on the same class expire (with the exception of Monday and Wednesday SPY and QQQ Expirations) or, in the case of Quarterly Options Series, on an expiration that coincides with an expiration of Quarterly Option Series on the same class.[13] As with Monday and Wednesday SPY and QQQ Expirations, the Exchange proposes to permit Monday and Wednesday IWM Expirations to expire in the same week as monthly options series on the same class. The Exchange believes that it is reasonable to extend this exemption to Monday and Wednesday IWM

[3] *See* Securities Exchange Act Release No. 91357 (September 28, 2021) (Approving SR–PHLX–2021–43).

[4] BOX Rule 100(a)(65) defines the term ''Short Term Option Series'' as a series in an option class that is approved for listing and trading on the Exchange in which the series is opened for trading on any Monday, Tuesday, Wednesday, Thursday or Friday that is a business day and that expires on the Monday, Wednesday or Friday of the next business week, or, in the case of a series that is listed on a Friday and expires on a Monday, is listed one business week and one business day prior to that expiration. If a Tuesday, Wednesday, Thursday or Friday is not a business day, the series may be opened (or shall expire) on the first business day immediately prior to that Tuesday, Wednesday, Thursday or Friday, respectively. For a series listed pursuant to this section for Monday expiration, if a Monday is not a business day, the series shall expire on the first business day immediately following that Monday.

[5] *See* IM–5050–6(b)(5).

[6] *Id.*

[7] *See* IM–5050–6(b)(5).

[8] *See* Cboe Rule 4.13(e)(1) ''. . . If the Exchange is not open for business on a respective Monday, the normally Monday expiring Weekly Expirations will expire on the following business day. If the Exchange is not open for business on a respective Wednesday or Friday, the normally Wednesday or Friday expiring Weekly Expirations will expire on the previous business day.''

[9] *See* Phlx Options 4A, Section 12(b)(5).

[10] *See* ISE Supplementary Material .07 to Options 4A, Section 12.

[11] *See* IM–5050–6(b)(2).

[12] *Id.*

[13] *See* current IM–5050–6(b)(2).

Expirations because Monday and Wednesday IWM Expirations and standard monthly options will not expire on the same trading day, as standard monthly options expire on Fridays. Additionally, the Exchange believes that not listing Monday and Wednesday IWM Expirations for one week every month because there was a monthly IWM expiration on the Friday of that week would create investor confusion.

The Exchange does not believe that any market disruptions will be encountered with the introduction of P.M.-settled Monday and Wednesday IWM expirations. The Exchange has the necessary capacity and surveillance programs in place to support and properly monitor trading in the proposed Monday and Wednesday IWM Expirations. The Exchange currently trades P.M.-settled Short Term Option Series that expire Monday and Wednesday for SPY and QQQ and has not experienced any market disruptions nor issues with capacity. Today, the Exchange has surveillance programs in place to support and properly monitor trading in Short Term Option Series that expire Monday and Wednesday for SPY and QQQ.

Similar to SPY and QQQ, the introduction of IWM Monday and Wednesday expirations will, among other things, expand hedging tools available to market participants and continue the reduction of the premium cost of buying protection. The Exchange believes that Monday and Wednesday IWM expirations will allow market participants to purchase IWM based on their timing as needed and allow them to tailor their investment and hedging needs more effectively.

2. Statutory Basis

The Exchange believes that the proposal is consistent with the requirements of Section 6(b) of the Securities Exchange Act of 1934 (the ''Act''),[14] in general, and Section 6(b)(5) of the Act,[15] in particular, in that it is designed to prevent fraudulent and manipulative acts and practices, to promote just and equitable principles of trade, to foster cooperation and coordination with persons engaged in facilitating transactions in securities, to remove impediments to and perfect the mechanism of a free and open market and a national market system, and, in general to protect investors and the public interest by providing the investing public and other market participants more flexibility to closely tailor their investment and hedging decisions in IWM options, thus allowing them to better manage their risk exposure.

In particular, the Exchange believes the Program has been successful to date and that Monday and Wednesday IWM Expirations should simply expand the ability of investors to hedge risk against market movements stemming from economic releases or market events that occur throughout the month in the same way that the Program has expanded the landscape of hedging. Similarly, the Exchange believes Monday and Wednesday IWM Expirations should create greater trading and hedging opportunities, as well as flexibility that will provide customers with the ability to tailor their investment objectives more effectively.

BOX currently lists Monday and Wednesday SPY and QQQ Expirations.[16] Also, Cboe[17] currently permits Monday and Wednesday expirations for other options with a weekly expiration, such as options on the SPX, XSP, RUT and MRUT pursuant to its Nonstandard Expirations Pilot Program. Phlx[18] and ISE[19] currently permit Monday and Wednesday expirations for other options with a weekly expiration on NDX pursuant to its Nonstandard Expirations Pilot Programs, respectively.

With the exception of Monday expiration series that are scheduled to expire on a holiday, there are no material differences in the treatment of Monday and Wednesday IWM expirations for Short Term Option Series. The Exchange believes that it is consistent with the Act to treat Monday expiration series that expire on a holiday differently than Wednesday or Friday expiration series, since the proposed treatment for Monday expiration series will result in an expiration date that is closer in time to the scheduled expiration date of the series, and therefore may be more representative of anticipated market conditions. Monday SPY and QQQ expirations are treated in this manner today.[20] Cboe[21] uses the same procedure for SPX, XSP, RUT and MRUT options with Monday expirations that are listed pursuant to its Nonstandard Expirations Pilot Program and that are scheduled to expire on a holiday, as do Phlx[22] and ISE[23] for NDX options with Monday expirations that are listed pursuant to their Nonstandard Expirations Pilot Programs, respectively.

Given the similarities between Monday and Wednesday SPY and QQQ Expirations and the proposed Monday and Wednesday IWM Expirations, the Exchange believes that applying the provisions in IM–5050–6, which currently apply to Monday and Wednesday SPY and QQQ Expirations, to Monday and Wednesday IWM Expirations is justified. For example, the Exchange believes that allowing Monday and Wednesday IWM Expirations and monthly IWM expirations in the same week will benefit investors and minimize investor confusion by providing Monday and Wednesday IWM Expirations in a continuous and uniform manner. The Exchange also believes that is appropriate to amend IM–5050–6(b)(2) to clarify that no Short Term Option Series may expire on the same day as an expiration of Quarterly Option Series on the same class, same as SPY and QQQ.

The Exchange represents that it has an adequate surveillance program in place to detect manipulative trading in Monday and Wednesday expirations, including Monday and Wednesday IWM Expirations, in the same way that it monitors trading in the current Short Term Option Series and trading in Monday and Wednesday SPY and QQQ Expirations. The Exchange also represents that it has the necessary systems capacity to support the new options series. Finally, the Exchange does not believe that any market disruptions will be encountered with the introduction of Monday and Wednesday IWM expirations.

*B. Self-Regulatory Organization's Statement on Burden on Competition*

The Exchange does not believe that the proposed rule change will impose any burden on competition not necessary or appropriate in furtherance of the purposes of the Act. In this regard and as indicated above, the Exchange notes that the rule change is being proposed as a competitive response to a filing submitted by Phlx.[24] The Exchange also notes that having Monday and Wednesday IWM expirations is not a novel proposal, as Monday and Wednesday SPY and QQQ Expirations are currently listed on BOX.[25] Cboe[26] uses the same procedure for SPX, XSP, RUT and MRUT options with Monday expirations that are listed

[14] 15 U.S.C. 78f(b).

[15] 15 U.S.C. 78f(b)(5).

[16] *See* IM–5050–6(c) and (d).

[17] *See supra* note 8.

[18] *See supra* note 9.

[19] *See supra* note 10.

[20] *See* IM–5050–6(b)(2).

[21] *See supra* note 8.

[22] *See supra* note 9.

[23] *See supra* note 10.

[24] *See supra,* note 3.

[25] *See* IM–5050–6(c) and (d).

[26] *See supra* note 8.

pursuant to its Nonstandard Expirations Pilot Program and that are scheduled to expire on a holiday, as do Phlx [27] and ISE [28] for NDX options with Monday expirations that are listed pursuant to their Nonstandard Expirations Pilot Programs, respectively.

The Exchange does not believe the proposal will impose any burden on intra-market competition, as all market participants will be treated in the same manner under this proposal. Additionally, the Exchange does not believe the proposal will impose any burden on inter-market competition, as nothing prevents the other options exchanges from proposing similar rules to list and trade Short-Term Option Series with Monday and Wednesday expirations.

*C. Self-Regulatory Organization's Statement on Comments on the Proposed Rule Change Received From Members, Participants, or Others*

The Exchange has neither solicited nor received comments on the proposed rule change.

**III. Date of Effectiveness of the Proposed Rule Change and Timing for Commission Action**

Because the foregoing proposed rule change does not: (i) Significantly affect the protection of investors or the public interest; (ii) impose any significant burden on competition; and (iii) become operative for 30 days from the date on which it was filed, or such shorter time as the Commission may designate, it has become effective pursuant to Section 19(b)(3)(A) of the Act [29] and Rule 19b–4(f)(6) thereunder.[30]

A proposed rule change filed pursuant to Rule 19b–4(f)(6) under the Act normally does not become operative for 30 days after the date of its filing. However, Rule 19b–4(f)(6)(iii) [31] permits the Commission to designate a shorter time if such action is consistent with the protection of investors and the public interest. The Exchange has requested that the Commission waive the 30-day operative delay so that the proposal may become operative immediately upon filing. The Commission notes that it recently approved Phlx's substantially similar proposal to list and trade Monday IWM Expirations and Wednesday IWM Expirations.[32] The Exchange has stated that waiver of the operative delay will allow the Exchange to list and trade the proposed product immediately, allowing the Exchange to compete with the exchanges that have this product in place. For these reasons, the Commission believes that the proposed rule change presents no novel issues and that waiver of the 30-day operative delay is consistent with the protection of investors and the public interest, and will allow the Exchange to remain competitive with other exchanges. Accordingly, the Commission hereby waives the operative delay and designates the proposed rule change operative upon filing.[33]

At any time within 60 days of the filing of the proposed rule change, the Commission summarily may temporarily suspend such rule change if it appears to the Commission that such action is necessary or appropriate in the public interest, for the protection of investors, or otherwise in furtherance of the purposes of the Act. If the Commission takes such action, the Commission shall institute proceedings to determine whether the proposed rule change should be approved or disapproved.

**IV. Solicitation of Comments**

Interested persons are invited to submit written data, views, and arguments concerning the foregoing, including whether the proposed rule change is consistent with the Act. Comments may be submitted by any of the following methods:

*Electronic Comments*

- Use the Commission's internet comment form (*http://www.sec.gov/rules/sro.shtml*); or
- Send an email to *rule-comments@sec.gov.* Please include File Number SR–BOX–2021–23 on the subject line.

*Paper Comments*

- Send paper comments in triplicate to Secretary, Securities and Exchange Commission, 100 F Street NE, Washington, DC 20549–1090.

All submissions should refer to File Number SR–BOX–2021–23. This file number should be included on the subject line if email is used. To help the Commission process and review your comments more efficiently, please use only one method. The Commission will post all comments on the Commission's internet website (*http://www.sec.gov/rules/sro.shtml*). Copies of the submission, all subsequent amendments, all written statements with respect to the proposed rule change that are filed with the Commission, and all written communications relating to the proposed rule change between the Commission and any person, other than those that may be withheld from the public in accordance with the provisions of 5 U.S.C. 552, will be available for website viewing and printing in the Commission's Public Reference Room, 100 F Street NE, Washington, DC 20549 on official business days between the hours of 10:00 a.m. and 3:00 p.m. Copies of the filing also will be available for inspection and copying at the principal office of the Exchange. All comments received will be posted without change. Persons submitting comments are cautioned that we do not redact or edit personal identifying information from comment submissions. You should submit only information that you wish to make available publicly. All submissions should refer to File Number SR–BOX–2021–23 and should be submitted on or before October 29, 2021.

For the Commission, by the Division of Trading and Markets, pursuant to delegated authority.[34]

**J. Matthew DeLesDernier,**

*Assistant Secretary.*

[FR Doc. 2021–21989 Filed 10–7–21; 8:45 am]

**BILLING CODE 8011–01–P**

[27] *See supra* note 9.

[28] *See supra* note 10.

[29] 15 U.S.C. 78s(b)(3)(A).

[30] 17 CFR 240.19b–4(f)(6). In addition, Rule 19b–4(f)(6) requires a self-regulatory organization to give the Commission written notice of its intention to file the proposed rule change at least five business days prior to the date of filing of the proposed rule change, or such shorter time as designated by the Commission. The Exchange has satisfied this requirement.

[31] 17 CFR 240.19b–4(f)(6)(iii).

[32] *See* supra note 3.

[33] For purposes only of waiving the 30-day operative delay, the Commission has also considered the proposed rule's impact on efficiency, competition, and capital formation. *See* 15 U.S.C. 78c(f).

[34] 17 CFR 200.30–3(a)(12).

## SECURITIES AND EXCHANGE COMMISSION

**[Release No. 34–93252; File No. SR–PEARL–2021–47]**

## Self-Regulatory Organizations; MIAX PEARL, LLC; Notice of Filing and Immediate Effectiveness of Proposed Rule Change To Permit Monday and Wednesday Expirations for Options Listed Pursuant to the Short Term Option Series Program on the iShares Russell 2000 ETF ("IWM")

October 4, 2021.

Pursuant to Section 19(b)(1) of the Securities Exchange Act of 1934 ("Act"),[1] and Rule 19b–4 thereunder,[2] notice is hereby given that on October 1, 2021, MIAX PEARL, LLC ("MIAX Pearl" or the "Exchange") filed with the

[1] 15 U.S.C. 78s(b)(1).

[2] 17 CFR 240.19b–4.

Securities and Exchange Commission (''Commission'') the proposed rule change as described in Items I and II below, which Items have been prepared by the Exchange. The Commission is publishing this notice to solicit comments on the proposed rule change from interested persons.

**I. Self-Regulatory Organization's Statement of the Terms of Substance of the Proposed Rule Change**

The Exchange proposes to amend Policy .02 (Short Term Option Series Program) of Exchange Rule 404, Series of Option Contracts Open for Trading, to permit Monday and Wednesday expirations for options listed pursuant to the Short Term Option Series Program (''Program'') on the iShares Russell 2000 ETF (''IWM'').

The text of the proposed rule change is available on the Exchange's website at *http://www.miaxoptions.com/rule-filings/pearl* at MIAX Pearl's principal office, and at the Commission's Public Reference Room.

**II. Self-Regulatory Organization's Statement of the Purpose of, and Statutory Basis for, the Proposed Rule Change**

In its filing with the Commission, the Exchange included statements concerning the purpose of and basis for the proposed rule change and discussed any comments it received on the proposed rule change. The text of these statements may be examined at the places specified in Item IV below. The Exchange has prepared summaries, set forth in sections A, B, and C below, of the most significant aspects of such statements.

*A. Self-Regulatory Organization's Statement of the Purpose of, and Statutory Basis for, the Proposed Rule Change*

1. Purpose

The Exchange proposes to amend Policy .02 (Short Term Option Series Program) of Exchange Rule 404, Series of Option Contracts Open for Trading, to permit Monday and Wednesday expirations for options listed pursuant to the Short Term Option Series Program (''Program'') on the iShares Russell 2000 ETF (''IWM''). This is a competitive filing that is based on a proposal recently submitted by Nasdaq Phlx LLC (''Phlx'') and approved by the Securities and Exchange Commission (''Commission'').[3]

A Short Term Option Series is a series in an option class that is approved for listing and trading on the Exchange in which the series is opened for trading on any Monday, Tuesday, Wednesday, Thursday or Friday that is a business day and that expires on the Monday, Wednesday or Friday of the next business week, or, in the case of a series that is listed on a Friday and expires on a Monday, is listed one business week and one business day prior to that expiration.[4] The Exchange is proposing to amend Policy .02 of Exchange Rule 404 to permit the listing of options series that expire on Mondays and Wednesdays in IWM.

Monday Expirations

As proposed, with respect to Monday IWM Expirations within Policy .02 of Rule 404, the Exchange may open for trading on any Friday or Monday that is a business day series of options on IWM to expire on any Monday of the month that is a business day and is not a Monday in which Quarterly Options Series on the same class expire (''Monday IWM Expirations''), provided that Monday IWM Expirations that are listed on a Friday must be listed at least one business week and one business day prior to the expiration. The Exchange may list up to five consecutive Monday IWM Expirations at one time; the Exchange may have no more than a total of five Monday IWM Expirations.

Wednesday Expirations

As proposed, with respect to Wednesday IWM Expirations within Policy .02, the Exchange may open for trading on any Tuesday or Wednesday that is a business day series of options on IWM to expire on any Wednesday of the month that is a business day and is not a Wednesday in which Quarterly Options Series on the same class expire (''Wednesday IWM Expirations''). The Exchange may list up to five consecutive Wednesday IWM Expirations at one time; the Exchange may have no more than a total of five Wednesday IWM Expirations.

Monday and Wednesday Expirations

The interval between strike prices for the proposed Monday and Wednesday IWM Expirations will be the same as those for the current Short Term Option Series for Wednesday and Friday expirations applicable to the Program.[5] Specifically, the Monday and Wednesday IWM Expirations will have a $0.50 strike interval minimum.[6] As is the case with other equity options series listed pursuant to the Program, the Monday and Wednesday IWM Expirations series will be P.M.-settled.

Pursuant to Policy .02 of Rule 404, with respect to the Program, if Monday is not a business day the series shall expire on the first business day immediately following that Monday. This procedure differs from the expiration date of Wednesday expiration series that are scheduled to expire on a holiday. Pursuant to Policy .02 of Rule 404, a Wednesday expiration series shall expire on the first business day immediately prior to that Wednesday, *e.g.,* Tuesday of that week, if the Wednesday is not a business day. For purposes of IWM, however, the Exchange believes that it is preferable to require Monday expiration series in this scenario to expire on the Tuesday of that week rather than the previous business day, *e.g.,* the previous Friday, since the Tuesday is closer in time to the scheduled expiration date of the series than the previous Friday, and therefore may be more representative of anticipated market conditions. Monday SPY and QQQ expirations[7] are treated in this manner today. Cboe Exchange, Inc. (''Cboe'') uses the same procedure for options on the S&P 500 index (''SPX''), Mini-SPX Index Options (''XSP''), Russell 2000 Index (''RUT'') and Mini-Russell 2000 Index Options (''MRUT'') and with Monday expirations that are listed pursuant to its Nonstandard Expirations Pilot Program and that are scheduled to expire on a holiday.[8] Also Nasdaq Phlx[9] and Nasdaq ISE, LLC (''ISE'')[10] also use the same procedure for options on the Nasdaq-100® (''NDX'') with Monday expirations that are listed pursuant to its Nonstandard Expirations Pilot Programs, respectively.

Currently, for each option class eligible for participation in the Program,

[3] *See* Securities Exchange Act Release No. 93157 (September 28, 2021) (Approving SR–PHLX–2021–43).

[4] The term ''Short Term Option Series'' is a series in an option class that is approved for listing and trading on the Exchange in which the series is opened for trading on any Monday, Tuesday, Wednesday, Thursday or Friday that is a business day and that expires on the Monday, Wednesday or Friday of the next business week, or, in the case of a series that is listed on a Friday and expires on a Monday, is listed one business week and one business day prior to that expiration. If a Tuesday, Wednesday, Thursday or Friday is not a business day, the series may be opened (or shall expire) on the first business day immediately prior to that Tuesday, Wednesday, Thursday or Friday, respectively. For a series listed pursuant to this section for Monday expiration, if a Monday is not a business day, the series shall expire on the first business day immediately following that Monday. *See* Exchange Rule 100.

[5] *See* Policy .02(e) of Exchange Rule 404.

[6] *Id.*

[7] *See* Policy .02 of Exchange Rule 404.

[8] *See* Cboe Rule 4.13(e)(1).

[9] *See* Phlx Options 4A, Section 12(b)(5).

[10] *See* ISE Supplementary Material .07 to Options 4A, Section 12.

the Exchange is limited to opening thirty (30) series for each expiration date for the specific class.[11] The thirty (30) series restriction does not include series that are open by other securities exchanges under their respective short term options rules; the Exchange may list these additional series that are listed by other exchanges.[12] This thirty (30) series restriction would apply to Monday and Wednesday IWM Expiration series as well. In addition, the Exchange will be able to list series that are listed by other exchanges, assuming they file similar rules with the Commission to list IWM options expiring on Mondays and Wednesdays.

Finally, the Exchange is amending Policy .02(b) to Rule 404, which addresses the listing of Short Term Option Series that expire in the same week as monthly or quarterly options series. Currently, that rule states that no Short Term Option Series may expire in the same week in which monthly option series on the same class expire (with the exception of Monday and Wednesday SPY and QQQ Expirations) or, in the case of Quarterly Options Series, on an expiration that coincides with an expiration of Quarterly Options Series on the same class.[13] As with Monday and Wednesday SPY and QQQ Expirations, the Exchange is proposing to permit Monday and Wednesday IWM Expirations to expire in the same week as monthly options series on the same class. The Exchange believes that it is reasonable to extend this exemption to Monday and Wednesday IWM Expirations because Monday and Wednesday IWM Expirations and standard monthly options will not expire on the same trading day, as standard monthly options expire on Fridays. Additionally, the Exchange believes that not listing Monday and Wednesday IWM Expirations for one week every month because there was a monthly IWM expiration on the Friday of that week would create investor confusion.

The Exchange does not believe that any market disruptions will be encountered with the introduction of P.M.-settled Monday and Wednesday IWM Expirations. The Exchange has the necessary capacity and surveillance programs in place to support and properly monitor trading in the proposed Monday and Wednesday IWM Expirations. The Exchange currently trades P.M.-settled Short Term Option Series that expire Monday and Wednesday for SPY and QQQ and has not experienced any market disruptions nor issues with capacity. The Exchange currently has surveillance programs in place to support and properly monitor trading in Short Term Option Series that expire Monday and Wednesday for SPY and QQQ.

Similar to SPY and QQQ, the introduction of Monday and Wednesday IWM Expirations will, among other things, expand hedging tools available to market participants and continue the reduction of the premium cost of buying protection. The Exchange believes that Monday and Wednesday IWM Expirations will allow market participants to purchase IWM based on their timing as needed and allow them to tailor their investment and hedging needs more effectively.

2. Statutory Basis

The Exchange believes that its proposed rule change is consistent with Section 6(b) of the Act[14] in general, and furthers the objectives of Section 6(b)(5) of the Act[15] in particular, in that it is designed to prevent fraudulent and manipulative acts and practices, to promote just and equitable principles of trade, to foster cooperation and coordination with persons engaged in regulating, clearing, settling, processing information with respect to, and facilitating transactions in securities, to remove impediments to and perfect the mechanisms of a free and open market and a national market system and, in general, to protect investors and the public interest by providing the investing public and other market participants more flexibility to closely tailor their investment and hedging decisions in IWM options, thus allowing them to better manage their risk exposure.

In particular, the Exchange believes the Program has been successful to date and that Monday and Wednesday IWM Expirations should simply expand the ability of investors to hedge risk against market movements stemming from economic releases or market events that occur throughout the month in the same way that the Program has expanded the landscape of hedging. Similarly, the Exchange believes Monday and Wednesday IWM Expirations should create greater trading and hedging opportunities, as well as flexibility that will provide Members with the ability to tailor their investment objectives more effectively.

The Exchange currently lists Monday and Wednesday SPY and QQQ Expirations.[16] Also, Cboe currently permits Monday and Wednesday expirations for other options with a weekly expiration, such as options on SPX, XSP, RUT, and MRUT pursuant to its Nonstandard Expirations Pilot Program.[17] Phlx[18] and ISE[19] currently permit Monday and Wednesday expirations for other options with a weekly expiration on NDX pursuant to their Nonstandard Expirations Pilot Programs.

With the exception of Monday expiration series that are scheduled to expire on a holiday, there are no material differences in the treatment of Monday and Wednesday IWM Expirations for Short Term Option Series. The Exchange believes that it is consistent with the Act to treat Monday expiration series that expire on a holiday differently than Wednesday or Friday expiration series, since the proposed treatment for Monday expiration series will result in an expiration date that is closer in time to the scheduled expiration date of the series, and therefore may be more representative of anticipated market conditions. Monday SPY and QQQ expirations are treated in this manner today.[20] Cboe[21] uses the same procedure for SPX, XSP, RUT, and MRUT options with Monday expirations that are scheduled to expire on a holiday, as do Phlx[22] and ISE[23] for NDX options with Monday expirations that are listed pursuant to their Nonstandard Expirations Pilot Programs, respectively.

Given the similarities between Monday and Wednesday SPY and QQQ Expirations and the proposed Monday and Wednesday IWM Expirations, the Exchange believes that applying the provisions in Policy .02(b) of Rule 404, which currently apply to Monday and Wednesday SPY and QQQ Expirations, to Monday and Wednesday IWM Expirations is justified. For example, the Exchange believes that allowing Monday and Wednesday IWM Expirations and monthly IWM expirations in the same week will benefit investors and minimize investor confusion by providing Monday and Wednesday IWM Expirations in a continuous and uniform manner. The Exchange also believes that it is appropriate to amend Policy .02(b) of

[11] *See* Policy .02 of Exchange Rule 404.

[12] *See* Exchange Rule 404A(b)(6).

[13] *See* Policy .02(b) of Exchange Rule 404.

[14] 15 U.S.C. 78f(b).

[15] 15 U.S.C. 78f(b)(5).

[16] *See* Policy .02 of Exchange Rule 404.

[17] *Supra* note 8.

[18] *Supra* note 9.

[19] *Supra* note 10.

[20] *See* Policy .02(b) of Exchange Rule 404.

[21] *Supra* note 8.

[22] *Supra* note 9.

[23] *Supra* note 10.

Rule 404 to clarify that no Short Term Option Series may expire on the same day as an expiration of Quarterly Options Series on the same class, same as SPY and QQQ.

The Exchange represents that it has an adequate surveillance program in place to detect manipulative trading in Monday and Wednesday expirations, including Monday and Wednesday IWM Expirations, in the same way that it monitors trading in the current Short Term Option Series and trading in Monday and Wednesday SPY and QQQ Expirations. The Exchange also represents that it has the necessary systems capacity to support the new options series. Finally, the Exchange does not believe that any market disruptions will be encountered with the introduction of Monday and Wednesday IWM Expirations.

*B. Self-Regulatory Organization's Statement on Burden on Competition*

The Exchange does not believe that the proposed rule change will impose any burden on competition that is not necessary or appropriate in furtherance of the purposes of the Act. In this regard and as indicated above, the Exchange notes that the rule change is being proposed as a competitive response to a filing submitted by Phlx.[24] The Exchange also notes that having Monday and Wednesday IWM Expirations is not a novel proposal, as Monday and Wednesday SPY and QQQ Expirations are currently listed on the Exchange.[25] Cboe uses the same procedure for SPX, XSP, RUT, and MRUT options with Monday expirations that are listed pursuant to its Nonstandard Expirations Pilot Program and that are scheduled to expire on a holiday,[26] as do Phlx [27] and ISE [28] for NDX options with Monday expirations that are listed pursuant to their Nonstandard Expirations Pilot Programs, respectively.

The Exchange does not believe the proposal will impose any burden on intra-market competition, as all market participants will be treated in the same manner under this proposal. Additionally, the Exchange does not believe the proposal will impose any burden on inter-market competition, as nothing prevents the other options exchanges from proposing similar rules to list and trade Short-Term Option Series with Monday and Wednesday expirations.

*C. Self-Regulatory Organization's Statement on Comments on the Proposed Rule Change Received From Members, Participants, or Others*

Written comments were neither solicited nor received.

**III. Date of Effectiveness of the Proposed Rule Change and Timing for Commission Action**

Because the foregoing proposed rule change does not: (i) Significantly affect the protection of investors or the public interest; (ii) impose any significant burden on competition; and (iii) become operative for 30 days from the date on which it was filed, or such shorter time as the Commission may designate, it has become effective pursuant to Section 19(b)(3)(A) of the Act [29] and Rule 19b–4(f)(6) thereunder.[30]

A proposed rule change filed pursuant to Rule 19b–4(f)(6) under the Act normally does not become operative for 30 days after the date of its filing. However, Rule 19b–4(f)(6)(iii) [31] permits the Commission to designate a shorter time if such action is consistent with the protection of investors and the public interest. The Exchange has requested that the Commission waive the 30-day operative delay so that the proposal may become operative immediately upon filing. The Commission notes that it recently approved Phlx's substantially similar proposal to list and trade Monday IWM Expirations and Wednesday IWM Expirations.[32] The Exchange stated that waiver of the operative delay is consistent with the protection of investors and the public interest as it would encourage fair competition among exchanges by allowing MIAX Pearl to compete effectively with Phlx by having the ability to list and trade the same Monday and Wednesday IWM Expirations that Phlx is able to list and trade. For these reasons, the Commission believes that the proposed rule change presents no novel issues and that waiver of the 30-day operative delay is consistent with the protection of investors and the public interest, and will allow the Exchange to remain competitive with other exchanges. Accordingly, the Commission hereby waives the operative delay and designates the proposed rule change operative upon filing.[33]

At any time within 60 days of the filing of the proposed rule change, the Commission summarily may temporarily suspend such rule change if it appears to the Commission that such action is necessary or appropriate in the public interest, for the protection of investors, or otherwise in furtherance of the purposes of the Act. If the Commission takes such action, the Commission shall institute proceedings to determine whether the proposed rule change should be approved or disapproved.

**IV. Solicitation of Comments**

Interested persons are invited to submit written data, views, and arguments concerning the foregoing, including whether the proposed rule change is consistent with the Act. Comments may be submitted by any of the following methods:

*Electronic Comments*

- Use the Commission's internet comment form (*http://www.sec.gov/rules/sro.shtml*); or
- Send an email to *rule-comments@sec.gov*. Please include File Number SR–PEARL–2021–47 on the subject line.

*Paper Comments*

- Send paper comments in triplicate to Secretary, Securities and Exchange Commission, 100 F Street NE, Washington, DC 20549–1090.

All submissions should refer to File Number SR–PEARL–2021–47. This file number should be included on the subject line if email is used. To help the Commission process and review your comments more efficiently, please use only one method. The Commission will post all comments on the Commission's internet website (*http://www.sec.gov/rules/sro.shtml*). Copies of the submission, all subsequent amendments, all written statements with respect to the proposed rule change that are filed with the Commission, and all written communications relating to the proposed rule change between the Commission and any person, other than those that may be withheld from the public in accordance with the provisions of 5 U.S.C. 552, will be available for website viewing and printing in the Commission's Public Reference Room, 100 F Street NE, Washington, DC 20549 on official

[24] *Supra* note 3.

[25] *Supra* note 12.

[26] *Supra* note 9.

[27] *Supra* note 10.

[28] *Supra* note 11.

[29] 15 U.S.C. 78s(b)(3)(A).

[30] 17 CFR 240.19b–4(f)(6). In addition, Rule 19b–4(f)(6) requires a self-regulatory organization to give the Commission written notice of its intent to file the proposed rule change at least five business days prior to the date of filing of the proposed rule change, or such shorter time as designated by the Commission. The Exchange has satisfied this requirement.

[31] 17 CFR 240.19b–4(f)(6)(iii).

[32] *See supra* note 3.

[33] For purposes only of waiving the 30-day operative delay, the Commission has also considered the proposed rule's impact on efficiency, competition, and capital formation. *See* 15 U.S.C. 78c(f).

business days between the hours of 10:00 a.m. and 3:00 p.m. Copies of the filing also will be available for inspection and copying at the principal office of the Exchange. All comments received will be posted without change. Persons submitting comments are cautioned that we do not redact or edit personal identifying information from comment submissions. You should submit only information that you wish to make available publicly. All submissions should refer to File Number SR–PEARL–2021–47 and should be submitted on or before October 29, 2021.

For the Commission, by the Division of Trading and Markets, pursuant to delegated authority.[34]

**J. Matthew DeLesDernier,**

*Assistant Secretary.*

[FR Doc. 2021–21996 Filed 10–7–21; 8:45 am]

**BILLING CODE 8011–01–P**

## SECURITIES AND EXCHANGE COMMISSION

**[Release No. 34–93253; File No. SR–CboeEDGX–2021–044]**

## Self-Regulatory Organizations; Cboe EDGX Exchange, Inc.; Notice of Filing and Immediate Effectiveness of a Proposed Rule Change To Amend Rule 19.6.05 To Allow Monday and Wednesday Expirations for Options Listed Pursuant to the Short Term Option Series Program on the iShares Russell 2000 ETF (''IWM'')

October 4, 2021.

Pursuant to Section 19(b)(1) of the Securities Exchange Act of 1934 (the ''Act''),[1] and Rule 19b–4 thereunder,[2] notice is hereby given that on October 1, 2021, Cboe EDGX Exchange, Inc. (the ''Exchange'' or ''EDGX'') filed with the Securities and Exchange Commission (the ''Commission'') the proposed rule change as described in Items I and II below, which Items have been prepared by the Exchange. The Exchange filed the proposal as a ''non-controversial'' proposed rule change pursuant to Section 19(b)(3)(A)(iii) of the Act[3] and Rule 19b–4(f)(6) thereunder.[4] The Commission is publishing this notice to solicit comments on the proposed rule change from interested persons.

### I. Self-Regulatory Organization's Statement of the Terms of Substance of the Proposed Rule Change

Cboe EDGX Exchange, Inc. (the ''Exchange'' or ''EDGX Options'') proposes to amend Rule 19.6.05 to allow Monday and Wednesday expirations for options listed pursuant to the Short Term Option Series Program on the iShares Russell 2000 ETF (''IWM''). The text of the proposed rule change is provided in Exhibit 5.

The text of the proposed rule change is also available on the Exchange's website (*http://markets.cboe.com/us/options/regulation/rule_filings/edgx/*), at the Exchange's Office of the Secretary, and at the Commission's Public Reference Room.

### II. Self-Regulatory Organization's Statement of the Purpose of, and Statutory Basis for, the Proposed Rule Change

In its filing with the Commission, the Exchange included statements concerning the purpose of and basis for the proposed rule change and discussed any comments it received on the proposed rule change. The text of these statements may be examined at the places specified in Item IV below. The Exchange has prepared summaries, set forth in sections A, B, and C below, of the most significant aspects of such statements.

*A. Self-Regulatory Organization's Statement of the Purpose of, and Statutory Basis for, the Proposed Rule Change*

1. Purpose

The Exchange proposes to amend Rule 19.6.05 to allow Monday and Wednesday expirations for options listed pursuant to the Short Term Option Series Program on IWM. The Exchange notes that this proposed rule change is substantively identical to a rule change recently adopted by Nasdaq Phlx LLC. (''Phlx'')[5] and approved by the Securities and Exchange Commission (''Commission'').[6]

Rule 19.6.05[7] currently governs the Exchange's Short Term Option Series Program. The term ''Short Term Option Series'' means a series in an option class that is approved for listing and trading on the Exchange in which the series is opened for trading on any Monday, Tuesday, Wednesday, Thursday or Friday that is a business day and that expires on the Monday, Wednesday or Friday of the next business week, or, in the case of a series that is listed on a Friday and expires on a Monday, is listed one business week and one business day prior to that expiration. If a Tuesday, Wednesday, Thursday or Friday is not a business day, the series may be opened (or shall expire) on the first business day immediately prior to that Tuesday, Wednesday, Thursday or Friday, respectively. For a series listed pursuant to this section for Monday expiration, if a Monday is not a business day, the series shall expire on the first business day immediately following that Monday.[8] Rule 19.6.05(h) provides that the Exchange may open weekly series for options on the SPDR S&P 500 ETF Trust (''SPY'') and the Invesco QQQ Trust (''QQQ'') with Monday and Wednesday expirations.

The proposed rule change amends Rule 19.6.05(h) to also allow Monday and Wednesday expiations for options on IWM. Specifically, the proposed rule change amends Rule 19.6.05(h) to provide that the Exchange may open for trading on any Friday or Monday that is a business day series of options on the SPDR S&P 500 ETF Trust (''SPY''), the iShares Russell 2000 ETF (''IWM'') and[9] the Invesco QQQ Trust (''QQQ'') to expire on any Monday of the month that is a business day and is not a Monday on which Quarterly Options Series expire (''Monday SPY Expirations'', ''Monday IWM Expirations'' and ''Monday QQQ Expirations''), provided that any Friday on which the Exchange opens for trading a Monday SPY, IWM and QQQ Expiration is one business week and one business day prior to expiration. The Exchange may also open for trading on any Tuesday or Wednesday that is a business day series of SPY options, IWM options and QQQ options to expire on any Wednesday of the month that is a business day and is not a Wednesday on which Quarterly Options Series expire (''Wednesday SPY Expirations'', ''Wednesday IWM Expirations'' and ''Wednesday QQQ Expirations''). The Exchange may list up to five consecutive series of each Monday SPY, IWM and QQQ

[34] 17 CFR 200.30–3(a)(12).

[1] 15 U.S.C. 78s(b)(1).

[2] 17 CFR 240.19b–4.

[3] 15 U.S.C. 78s(b)(3)(A)(iii).

[4] 17 CFR 240.19b–4(f)(6).

[5] *See* Securities Exchange Release No. 92655 (August 12, 2021), 86 FR 46304 (August 18, 2021) (SR–Phlx–2021–43) (Notice of Filing of Proposed Rule Change To Permit Monday and Wednesday Expirations for Options Listed Pursuant to the Short Term Option Series Program on the iShares Russell 2000 ETF (''IWM'')).

[6] *See* Securities Exchange Release No. 93157 (September 28, 2021) (SR–Phlx–2021–43) (Order Approving a Proposed Rule Change to Permit Monday and Wednesday Expirations for Options Listed Pursuant to the Short Term Options Program on the iShares Russell 2000 ETF (IWM)).

[7] The proposed rule change corrects an incorrect cross-reference in Rule 19.05 [sic].

[8] *See* Rule 16.1, definition of ''Short Term Option Series''.

[9] The proposed rule change makes a nonsubstantive change in order simplify the rule language.

Expirations and up to five consecutive series of each Wednesday SPY, IWM and QQQ Expirations at one time; the Exchange may have no more than a total of five of each Monday SPY, IWM and QQQ Expirations and no more than a total of five of each Wednesday SPY, IWM and QQQ Expirations. Monday and Wednesday SPY, IWM and QQQ Expirations will be subject to the provisions of this Rule.[10] Additionally, the proposed rule change amends Rule 19.6.05(b), which currently excepts Monday and Wednesday SPY and QQQ Expirations from the prohibition on Short Term Option Series expiring in the same week in which monthly option series on the same class expire, to provide that, with the exception of Monday and Wednesday SPY, IWM and QQQ Expirations, no Short Term Option Series may expire in the same week in which monthly option series on the same class expire.

Similar to SPY and QQQ, the Exchange believes that the introduction of IWM Monday and Wednesday Expirations will expand hedging tools available to market participants and continue to assist in reducing the premium cost of buying protection. By offering Monday and Wednesday IWM Expirations, the proposed rule change will allow market participants to purchase IWM based on their timing needs and allow them to more effectively tailor their investment and hedging strategies.

The Exchange notes that, pursuant to the definition of Short Term Option Series,[11] if the Exchange is not open for business on a Wednesday, then a Wednesday IWM Expiration will expire on the first business day immediately prior to that Wednesday (*e.g.,* Tuesday of that week). However, regarding Monday IWM Expirations, if the Exchange is not open for business on a Monday, then a Monday IWM Expiration will expire on the first business day following that Monday (*e.g.,* Tuesday of that week). This is the same expiration process currently in place for Monday and Wednesday SPY and QQQ Expirations. The Exchange believes that it is appropriate to require Monday expiration series to expire on the Tuesday of that week, rather than the previous business day (*e.g.,* the previous Friday), when expiration Monday does not fall on a business day because the immediately following Tuesday is closer in time to the scheduled expiration date of the series than the previous Friday. Therefore, the following business day in this case may be more representative of anticipated market conditions than the previous business day. The Exchange notes that, not only are Monday SPY and QQQ Expirations treated in the same manner today, but the same applies to weekly index options listed pursuant to the Nonstandard Expiration Program.[12] The Exchange also notes that permitting Monday and Wednesday IWM Expirations to expire in the same week as monthly options series on the same class, like that of Monday and Wednesday SPY and QQQ Expirations, is appropriate because Monday and Wednesday IWM Expirations and standard monthly options will not expire on the same trading day, as standard monthly options expire on Fridays. Additionally, the Exchange believes that listing Monday and Wednesday IWM Expirations each week of the month will provide consistency for investors and mitigate any potential confusion regarding weekly listings.

The Exchange notes that the interval between strike prices for the proposed Monday and Wednesday IWM Expirations are the same as those for the Monday and Wednesday SPY and QQQ Expirations and the Short Term Option Series with Wednesday and Friday expirations.[13] Specifically, the proposed Monday and Wednesday IWM Expirations have a $0.50 strike interval minimum.[14] As is the case with other equity options series listed pursuant to the Short Term Option Series Program, Monday and Wednesday IWM Expirations are P.M.-settled. Also, pursuant to Rule 19.6.05(a), the Exchange may open up to 30 Short Term Option Series for each expiration date in each option class eligible for participation in the Short Term Option Series Program. This includes Monday and Wednesday IWM Expirations for IWM options. In addition to the 30 series per class, the Exchange may open Short Term Option Series, including Monday and Wednesday IWM Expirations, that are opened by other securities exchanges in option classes selected by such exchanges under their respective short term option rules.

The Exchange does not believe that listing series of P.M.-settled Monday and Wednesday expirations for options on IWM will have any adverse impact on fair and orderly markets as the Exchange already lists weekly series with the same settlement and expirations for options on SPY and QQQ, as well as for weekly index options pursuant to the Nonstandard Pilot Program,[15] and has not experienced any issues regarding adverse market impact in connection with the listing of these series. The Exchange represents that it has the necessary capacity and surveillance programs in place to support and properly monitor trading in the proposed Monday and Wednesday IWM Expirations. The Exchange currently deploys such surveillance programs to monitor Monday and Wednesday SPY and QQQ Expirations and has not experienced any issues with capacity in connection with listing Monday and Wednesday SPY and QQQ Expirations. The Exchange intends to begin implementation of the proposed rule change on October 5, 2021, as Phlx, as well as its affiliated options exchanges, intend to begin listing weekly Monday IWM Expirations on this date.[16] The Exchange will issue a notice of the planned implementation date to its Members in advance.

2. Statutory Basis

The Exchange believes the proposed rule change is consistent with the Securities Exchange Act of 1934 (the ''Act'') and the rules and regulations thereunder applicable to the Exchange and, in particular, the requirements of Section 6(b) of the Act.[17] Specifically, the Exchange believes the proposed rule change is consistent with the Section 6(b)(5)[18] requirements that the rules of an exchange be designed to prevent fraudulent and manipulative acts and practices, to promote just and equitable principles of trade, to foster cooperation and coordination with persons engaged in regulating, clearing, settling, processing information with respect to, and facilitating transactions in securities, to remove impediments to and perfect the mechanism of a free and open market and a national market system, and, in general, to protect investors and the public interest. Additionally, the Exchange believes the proposed rule change is consistent with the Section 6(b)(5)[19] requirement that the rules of an exchange not be designed

[10] The proposed rule change also updates a reference to ''Monday or Wednesday SPY and QQQ Expirations'' in Rule 19.6.05 to refer to ''Monday or Wednesday SPY, IWM and QQQ Expirations''.

[11] *See supra* note 8.

[12] *See* Rule 29.11(j)(1).

[13] *See* Rule 19.6.05(e).

[14] *See id.*

[15] *See supra* note 12.

[16] *See* Options Trader Alert #2021–54, Nasdaq Introduces Monday and Wednesday Weekly Expirations For IWM Options (September 22, 2021) available at: *http://www.nasdaqtrader.com/MicroNews.aspx?id=OTA2021-54.* Phlx, BX, NOM, ISE, GEMX, and MRX anticipate listing weekly Wednesday IWM Expirations on October 5, 2021.

[17] 15 U.S.C. 78f(b).

[18] 15 U.S.C. 78f(b)(5).

[19] *Id.*

to permit unfair discrimination between customers, issuers, brokers, or dealers.

In particular, the Exchange believes the Short Term Option Series Program has been successful to date and that listing Monday and Wednesday IWM Expirations, like Monday and Wednesday SPY and QQQ Expirations already listed for trading, will expand the ability of investors to effectively hedge risk against market movements stemming from economic releases or market events that occur throughout the month. The Exchange believes that offering Monday and Wednesday IWM Expirations will create greater trading and hedging opportunities and flexibility for investors, allowing them to use IWM options listed pursuant to the Short Term Option Series Program in a manner more effectively tailored their investment and hedging objectives. As already noted, the Exchange currently offers series with the same settlement (P.M.) and expirations (Monday and Wednesday) for options on SPY and QQQ and for weekly index options pursuant to the Nonstandard Pilot Program.[20] The Exchange again notes that the proposed rule change is substantively identical to a rule recently adopted by Phlx and approved by the Commission.[21]

The manner in which Monday IWM Expirations will expire when expiration Monday lands on a holiday is consistent with the manner in which Monday SPY and QQQ Expirations currently expire under the same circumstances. The Exchange believes that allowing Monday IWM Expirations that expire on a holiday to fall on the following business day, as opposed to the prior business day (as applicable to Wednesday and Friday expirations that expire on a holiday), removes impediments to and perfects the mechanism of a free and open market and national by permitting such Monday expirations to occur closer in time to the scheduled expiration date of the series, which may be more representative of anticipated market conditions. Additionally, the proposed rule change to except Monday and Wednesday IWM Expirations from the prohibition on Short Term Option Series expiring in the same week in which monthly option series on the same class expire is consistent with the same exception that currently applies to Monday and Wednesday SPY and QQQ Expirations.[22] The proposed rule change is designed to provide consistency for investors and mitigate any potential confusion regarding weekly listings each week of the month.

The Exchange does not believe that listing series of P.M.-settled Monday and Wednesday expirations for options on IWM will have any adverse impact on fair and orderly markets as the Exchange already lists series with the same settlement and expirations for options on SPY and QQQ, as well as for weekly index options pursuant to the Nonstandard Pilot Program,[23] and has not observed any adverse market impact in connection with the listing of these series. The Exchange represents that it already has an adequate surveillance program in place to detect and deter any manipulative trading in Monday and Wednesday expirations, including Monday and Wednesday IWM Expirations, and that it has the necessary systems capacity to support the listing and trading of the new series.

*B. Self-Regulatory Organization's Statement on Burden on Competition*

The Exchange does not believe that the proposed rule change will impose any burden on competition that is not necessary or appropriate in furtherance of the purposes of the Act. The Exchange does not believe that the proposed rule change will impose any burden on intramarket competition that is not necessary or appropriate in furtherance of the purposes of the Act as Monday and Wednesday IWM Expirations will be available for quoting and trading on the Exchange for all market participants. Therefore, all market participants will equally be able to transact in IWM series listed with Monday and Wednesday expirations for trading on the Exchange.

The Exchange does not believe that the proposed rule change will impose any burden on intermarket competition that is not necessary or appropriate in furtherance of the purposes of the Act as it only impacts the permissible expirations for an option series listed on the Exchange. As stated, another options exchange has recently implemented a substantively identical rule to permit Monday and Wednesday IWM expirations on its exchange.[24] As such, this proposal is a competitive response that will permit the Exchange to list the same expirations for series in a multiply-listed option as another options exchange.

*C. Self-Regulatory Organization's Statement on Comments on the Proposed Rule Change Received From Members, Participants, or Others*

The Exchange neither solicited nor received comments on the proposed rule change.

**III. Date of Effectiveness of the Proposed Rule Change and Timing for Commission Action**

Because the foregoing proposed rule change does not: (i) Significantly affect the protection of investors or the public interest; (ii) impose any significant burden on competition; and (iii) become operative for 30 days from the date on which it was filed, or such shorter time as the Commission may designate, it has become effective pursuant to Section 19(b)(3)(A) of the Act[25] and Rule 19b–4(f)(6) thereunder.[26]

A proposed rule change filed pursuant to Rule 19b–4(f)(6) under the Act normally does not become operative for 30 days after the date of its filing. However, Rule 19b–4(f)(6)(iii)[27] permits the Commission to designate a shorter time if such action is consistent with the protection of investors and the public interest. The Exchange has requested that the Commission waive the 30-day operative delay so that the proposal may become operative immediately upon filing. The Commission notes that it recently approved Phlx's substantially similar proposal to list and trade Monday IWM Expirations and Wednesday IWM Expirations.[28] The Exchange has stated that waiver of the 30-day operative delay will allow the Exchange to implement the proposal as a competitive response, permitting the Exchange to list the same expirations for series in a multiply-listed option as another options exchange, at the same time that such options exchange intends to list such series. For these reasons, the Commission believes that the proposed rule change presents no novel issues and that waiver of the 30-day operative delay is consistent with the protection of investors and the public interest, and will allow the Exchange to remain competitive with other exchanges. Accordingly, the Commission hereby waives the operative delay and

[20] *See supra* note 12.

[21] *See supra* notes 5 and 6.

[22] As stated herein, because monthly options expire on Fridays, Monday and Wednesday weekly options will not land on the same day.

[23] *See supra* note 12.

[24] *See supra* notes 5 and 6.

[25] 15 U.S.C. 78s(b)(3)(A).

[26] 17 CFR 240.19b–4(f)(6). In addition, Rule 19b–4(f)(6) requires a self-regulatory organization to give the Commission written notice of its intent to file the proposed rule change at least five business days prior to the date of filing of the proposed rule change, or such shorter time as designated by the Commission. The Exchange has satisfied this requirement.

[27] 17 CFR 240.19b–4(f)(6)(iii).

[28] *See* supra note 6.

designates the proposed rule change operative upon filing.[29]

At any time within 60 days of the filing of the proposed rule change, the Commission summarily may temporarily suspend such rule change if it appears to the Commission that such action is necessary or appropriate in the public interest, for the protection of investors, or otherwise in furtherance of the purposes of the Act. If the Commission takes such action, the Commission shall institute proceedings to determine whether the proposed rule change should be approved or disapproved.

## IV. Solicitation of Comments

Interested persons are invited to submit written data, views, and arguments concerning the foregoing, including whether the proposed rule change is consistent with the Act. Comments may be submitted by any of the following methods:

*Electronic Comments*

- Use the Commission's internet comment form (*http://www.sec.gov/rules/sro.shtml*); or
- Send an email to *rule-comments@sec.gov.* Please include File Number SR–CboeEDGX–2021–044 on the subject line.

*Paper Comments*

- Send paper comments in triplicate to Secretary, Securities and Exchange Commission, 100 F Street NE, Washington, DC 20549–1090.

All submissions should refer to File Number SR–CboeEDGX–2021–044. This file number should be included on the subject line if email is used. To help the Commission process and review your comments more efficiently, please use only one method. The Commission will post all comments on the Commission's internet website (*http://www.sec.gov/rules/sro.shtml*). Copies of the submission, all subsequent amendments, all written statements with respect to the proposed rule change that are filed with the Commission, and all written communications relating to the proposed rule change between the Commission and any person, other than those that may be withheld from the public in accordance with the provisions of 5 U.S.C. 552, will be available for website viewing and printing in the Commission's Public Reference Room, 100 F Street NE, Washington, DC 20549 on official business days between the hours of 10:00 a.m. and 3:00 p.m. Copies of the filing also will be available for inspection and copying at the principal office of the Exchange. All comments received will be posted without change. Persons submitting comments are cautioned that we do not redact or edit personal identifying information from comment submissions. You should submit only information that you wish to make available publicly. All submissions should refer to File Number SR–CboeEDGX–2021–044 and should be submitted on or before October 29, 2021.

For the Commission, by the Division of Trading and Markets, pursuant to delegated authority.[30]

**J. Matthew DeLesDernier,**

*Assistant Secretary.*

[FR Doc. 2021–21994 Filed 10–7–21; 8:45 am]

**BILLING CODE 8011–01–P**

[29] For purposes only of waiving the 30-day operative delay, the Commission has also considered the proposed rule's impact on efficiency, competition, and capital formation. *See* 15 U.S.C. 78c(f).

[30] 17 CFR 200.30–3(a)(12).

---

## SECURITIES AND EXCHANGE COMMISSION

**[Release No. 34–93249; File No. SR–NASDAQ–2021–076]**

## Self-Regulatory Organizations; The Nasdaq Stock Market LLC; Notice of Filing and Immediate Effectiveness of Proposed Rule Change to Proposal To Permit Monday and Wednesday Expirations for Options Listed Pursuant to the Short Term Option Series Program on the iShares Russell 2000 ETF

October 4, 2021.

Pursuant to Section 19(b)(1) of the Securities Exchange Act of 1934 (''Act''),[1] and Rule 19b–4 thereunder,[2] notice is hereby given that on September 30, 2021, The Nasdaq Stock Market LLC (''Exchange'') filed with the Securities and Exchange Commission (''Commission'') the proposed rule change as described in Items I and II below, which Items have been prepared by the Exchange. The Commission is publishing this notice to solicit comments on the proposed rule change from interested persons.

### I. Self-Regulatory Organization's Statement of the Terms of Substance of the Proposed Rule Change

The Exchange proposes to proposal to permit Monday and Wednesday expirations for options listed pursuant to the Short Term Option Series Program on the iShares Russell 2000 ETF.

The text of the proposed rule change is available on the Exchange's website at *https://listingcenter.nasdaq.com/rulebook/nasdaq/rules,* at the principal office of the Exchange, and at the Commission's Public Reference Room.

### II. Self-Regulatory Organization's Statement of the Purpose of, and Statutory Basis for, the Proposed Rule Change

In its filing with the Commission, the Exchange included statements concerning the purpose of and basis for the proposed rule change and discussed any comments it received on the proposed rule change. The text of these statements may be examined at the places specified in Item IV below. The Exchange has prepared summaries, set forth in sections A, B, and C below, of the most significant aspects of such statements.

*A. Self-Regulatory Organization's Statement of the Purpose of, and Statutory Basis for, the Proposed Rule Change*

1. Purpose

The Exchange proposes to amend The Nasdaq Options Market LLC's (''NOM'') Rules at Options 4, Section 5 at Supplementary Material .03 to permit Monday and Wednesday expirations for options listed pursuant to the Short Term Option Series Program (''Program'') on the iShares Russell 2000 ETF (''IWM''). This rule change is similar to a rule change recently approved for Nasdaq Phlx LLC (''Phlx'').[3]

A Short Term Option Series means a series in an option class that is approved for listing and trading on the Exchange in which the series is opened for trading on any Monday, Tuesday, Wednesday, Thursday or Friday that is a business day and that expires on the Monday, Wednesday or Friday of the next business week, or, in the case of a series that is listed on a Friday and expires on a Monday, is listed one business week and one business day prior to that expiration.[4] The Exchange

[1] 15 U.S.C. 78s(b)(1).

[2] 17 CFR 240.19b–4.

[3] *See* Securities Exchange Act Release No. 93157 (September 28, 2021) (SR–PHLX–2021–43).

[4] Options 1, Section 1(a)(57) provides the term ''Short Term Option Series'' means a series in an option class that is approved for listing and trading on the Exchange in which the series is opened for trading on any Monday, Tuesday, Wednesday, Thursday or Friday that is a business day and that expires on the Monday, Wednesday or Friday of the next business week, or, in the case of a series that is listed on a Friday and expires on a Monday, is listed one business week and one business day prior to that expiration. If a Tuesday, Wednesday, Thursday or Friday is not a business day, the series

proposes to amend NOM Options 4, Section 5 at Supplementary Material .03 to permit the listing of options series that expire on Mondays and Wednesdays in IWM.

Monday Expirations

As proposed, with respect to Monday IWM Expirations within Supplementary Material .03 to Options 4, Section 5, the Exchange may open for trading on any Friday or Monday that is a business day series of options on IWM to expire on any Monday of the month that is a business day and is not a Monday in which Quarterly Options Series on the same class expire (''Monday IWM Expirations''), provided that Monday IWM Expirations that are listed on a Friday must be listed at least one business week and one business day prior to the expiration. The Exchange may list up to five consecutive Monday IWM Expirations at one time; the Exchange may have no more than a total of five Monday IWM Expirations.

Wednesday Expirations

As proposed, with respect to Wednesday IWM Expirations within Supplementary Material .03 to Options 4, Section 5, the Exchange may open for trading on any Tuesday or Wednesday that is a business day series of options on IWM to expire on any Wednesday of the month that is a business day and is not a Wednesday in which Quarterly Options Series on the same class expire (''Wednesday IWM Expirations''). The Exchange may list up to five consecutive Wednesday IWM Expirations at one time; the Exchange may have no more than a total of five Wednesday IWM Expirations and a total of five Wednesday IWM Expirations will be subject to the provisions of this Rule.

Monday and Wednesday Expirations

The interval between strike prices for the proposed Monday and Wednesday IWM Expirations will be the same as those for the current Short Term Option Series for Wednesday and Friday expirations applicable to the Program.[5] Specifically, the Monday and Wednesday IWM Expirations will have a $0.50 strike interval minimum.[6] As is the case with other equity options series listed pursuant to the Program, the Monday and Wednesday IWM Expiration series will be P.M.-settled.

Pursuant to Options 1, Section 1(a)(57), with respect to the Program, if Monday is not a business day the series shall expire on the first business day immediately following that Monday. This procedure differs from the expiration date of Wednesday expiration series that are scheduled to expire on a holiday. Pursuant to Options 1, Section 1(a)(57) a Wednesday expiration series shall expire on the first business day immediately prior to that Wednesday, *e.g.,* Tuesday of that week, if the Wednesday is not a business day. For purposes of IWM, however, the Exchange believes that it is preferable to require Monday expiration series in this scenario to expire on the Tuesday of that week rather than the previous business day, *e.g.,* the previous Friday, since the Tuesday is closer in time to the scheduled expiration date of the series than the previous Friday, and therefore may be more representative of anticipated market conditions. Monday SPY and QQQ expirations[7] are treated in this manner today. Cboe Exchange, Inc. (''Cboe'') uses the same procedure for options on the S&P 500 index (''SPX''), Mini-SPX Index Options (''XSP''), Russell 2000 Index (''RUT'') and Mini-Russell 200 Index Options (''MRUT'') and with Monday expirations that are listed pursuant to its Nonstandard Expirations Pilot Program and that are scheduled to expire on a holiday.[8] Also, Phlx[9] and Nasdaq ISE, LLC (''ISE'')[10] use the same procedure for options on the Nasdaq-100® (''NDX'') with Monday expirations that are listed pursuant to its Nonstandard Expirations Pilot Programs, respectively.

Currently, for each option class eligible for participation in the Program, the Exchange is limited to opening thirty (30) series for each expiration date for the specific class.[11] The thirty (30) series restriction does not include series that are open by other securities exchanges under their respective short term option rules; the Exchange may list these additional series that are listed by other exchanges.[12] This thirty (30) series restriction would apply to Monday and Wednesday IWM Expiration series as well. In addition, the Exchange will be able to list series that are listed by other exchanges, assuming they file similar rules with the Securities and Exchange Commission (''Commission'') to list IWM options expiring on Mondays and Wednesdays.

Finally, the Exchange is amending Supplementary Material .03(b) to Options 4, Section 5, which addresses the listing of Short Term Options Series that expire in the same week as monthly or quarterly options series. Currently, that rule states that no Short Term Option Series may expire in the same week in which monthly option series on the same class expire (with the exception of Monday and Wednesday SPY and QQQ Expirations) or, in the case of Quarterly Options Series, on an expiration that coincides with an expiration of Quarterly Option Series on the same class.[13] As with Monday and Wednesday SPY and QQQ Expirations, the Exchange proposes to permit Monday and Wednesday IWM Expirations to expire in the same week as monthly options series on the same class. The Exchange believes that it is reasonable to extend this exemption to Monday and Wednesday IWM Expirations because Monday and Wednesday IWM Expirations and standard monthly options will not expire on the same trading day, as standard monthly options expire on Fridays. Additionally, the Exchange believes that not listing Monday and Wednesday IWM Expirations for one week every month because there was a monthly IWM expiration on the Friday of that week would create investor confusion.

The Exchange does not believe that any market disruptions will be encountered with the introduction of P.M.-settled Monday and Wednesday IWM expirations. The Exchange has the necessary capacity and surveillance programs in place to support and properly monitor trading in the proposed Monday and Wednesday IWM Expirations. The Exchange currently trades P.M.-settled Short Term Option Series that expire Monday and Wednesday for SPY and QQQ and has not experienced any market disruptions nor issues with capacity. Today, the Exchange has surveillance programs in place to support and properly monitor trading in Short Term Option Series that

may be opened (or shall expire) on the first business day immediately prior to that Tuesday, Wednesday, Thursday or Friday, respectively. For a series listed pursuant to this section for Monday expiration, if a Monday is not a business day, the series shall expire on the first business day immediately following that Monday.

[5] *See* Supplementary Material .03(e) to Options 4, Section.

[6] *See* Supplementary Material .03 at Options 4, Section 5.

[7] *See* Supplementary Material .03 at Options 4, Section 5.

[8] *See* Cboe Rule 4.13(e)(1) ''. . . If the Exchange is not open for business on a respective Monday, the normally Monday expiring Weekly Expirations will expire on the following business day. If the Exchange is not open for business on a respective Wednesday or Friday, the normally Wednesday or Friday expiring Weekly Expirations will expire on the previous business day.''

[9] *See* Phlx Options 4A, Section 12(b)(5).

[10] *See* ISE Supplementary Material .07 to Options 4A, Section 12.

[11] *See* Supplementary Material .03(a) to Options 4, Section 5.

[12] *See* Supplementary Material .03(a) to Options 4, Section 5.

[13] *See* Supplementary Material .03(a) to Options 4, Section 5.

expire Monday and Wednesday for SPY and QQQ.

Similar to SPY and QQQ, the introduction of IWM Monday and Wednesday expirations will, among other things, expand hedging tools available to market participants and continue the reduction of the premium cost of buying protection. The Exchange believes that Monday and Wednesday IWM expirations will allow market participants to purchase IWM based on their timing as needed and allow them to tailor their investment and hedging needs more effectively.

The Exchange proposes to amend the ''.'' to a ''.'' after the title ''Short Term Options Series Program'' within Supplementary Material .03 to Options 4, Section 5.

2. Statutory Basis

The Exchange believes that the proposed rule change is consistent with Section 6(b) of the Act,[14] in general, and furthers the objectives of Section 6(b)(5) of the Act,[15] in particular, in that it is designed to promote just and equitable principles of trade, to remove impediments to and perfect the mechanism of a free and open market and a national market system, and, in general to protect investors and the public interest by providing the investing public and other market participants more flexibility to closely tailor their investment and hedging decisions in IWM options, thus allowing them to better manage their risk exposure.

In particular, the Exchange believes the Program has been successful to date and that Monday and Wednesday IWM Expirations should simply expand the ability of investors to hedge risk against market movements stemming from economic releases or market events that occur throughout the month in the same way that the Program has expanded the landscape of hedging. Similarly, the Exchange believes Monday and Wednesday IWM Expirations should create greater trading and hedging opportunities, as well as flexibility that will provide customers with the ability to tailor their investment objectives more effectively.

NOM currently lists Monday and Wednesday SPY and QQQ Expirations.[16] Also, Cboe[17] currently permits Monday and Wednesday expirations for other options with a weekly expiration, such as options on the SPX, XSP, RUT and MRUT pursuant to its Nonstandard Expirations Pilot Program. Phlx[18] and ISE[19] currently permit Monday and Wednesday expirations for other options with a weekly expiration on NDX pursuant to its Nonstandard Expirations Pilot Programs, respectively.

With the exception of Monday expiration series that are scheduled to expire on a holiday, there are no material differences in the treatment of Monday and Wednesday IWM expirations for Short Term Option Series. The Exchange believes that it is consistent with the Act to treat Monday expiration series that expire on a holiday differently than Wednesday or Friday expiration series, since the proposed treatment for Monday expiration series will result in an expiration date that is closer in time to the scheduled expiration date of the series, and therefore may be more representative of anticipated market conditions. Monday SPY and QQQ expirations are treated in this manner today.[20] Cboe[21] uses the same procedure for SPX, XSP, RUT and MRUT options with Monday expirations that are listed pursuant to its Nonstandard Expirations Pilot Program and that are scheduled to expire on a holiday, as do Phlx[22] and ISE[23] for NDX options with Monday expirations that are listed pursuant to their Nonstandard Expirations Pilot Programs, respectively.

Given the similarities between Monday and Wednesday SPY and QQQ Expirations and the proposed Monday and Wednesday IWM Expirations, the Exchange believes that applying the provisions in Supplementary Material .03 to Options 4, Section 5, which currently apply to Monday and Wednesday SPY and QQQ Expirations, to Monday and Wednesday IWM Expirations is justified. For example, the Exchange believes that allowing Monday and Wednesday IWM Expirations and monthly IWM expirations in the same week will benefit investors and minimize investor confusion by providing Monday and Wednesday IWM Expirations in a continuous and uniform manner. The Exchange also believes that is appropriate to amend Supplementary Material .03(b) to Options 4, Section 5 to clarify that no Short Term Option Series may expire on the same day as an expiration of Quarterly Option Series on the same class, same as SPY and QQQ.

The Exchange represents that it has an adequate surveillance program in place to detect manipulative trading in Monday and Wednesday expirations, including Monday and Wednesday IWM Expirations, in the same way that it monitors trading in the current Short Term Option Series and trading in Monday and Wednesday SPY and QQQ Expirations. The Exchange also represents that it has the necessary systems capacity to support the new options series. Finally, the Exchange does not believe that any market disruptions will be encountered with the introduction of Monday and Wednesday IWM expirations.

The Exchange's proposal to amend the ''.'' to a ''.'' after the title ''Short Term Options Series Program'' within Supplementary Material .03 to Options 4, Section 5 is a non-substantive technical amendment.

*B. Self-Regulatory Organization's Statement on Burden on Competition*

The Exchange does not believe that the proposed rule change will impose any burden on competition that is not necessary or appropriate in furtherance of the purposes of the Act. The Exchange notes that having Monday and Wednesday IWM expirations is not a novel proposal, as Monday and Wednesday SPY and QQQ Expirations are currently listed on NOM.[24] Cboe[25] uses the same procedure for SPX, XSP, RUT and MRUT options with Monday expirations that are listed pursuant to its Nonstandard Expirations Pilot Program and that are scheduled to expire on a holiday, as do Phlx[26] and ISE[27] for NDX options with Monday expirations that are listed pursuant to their Nonstandard Expirations Pilot Programs, respectively.

The Exchange does not believe the proposal will impose any burden on intra-market competition, as all market participants will be treated in the same manner under this proposal. Additionally, the Exchange does not believe the proposal will impose any burden on inter-market competition, as nothing prevents the other options exchanges from proposing similar rules to list and trade Short-Term Option Series with Monday and Wednesday expirations.

[14] 15 U.S.C. 78f(b).

[15] 15 U.S.C. 78f(b)(5).

[16] *See* Supplementary Material .03 at Options 4, Section 5.

[17] *See* note 8 above.

[18] *See* note 9 above.

[19] *See* note 10 above.

[20] *See* Supplementary Material .03 at Options 4, Section 5.

[21] *See* note 8 above.

[22] *See* note 9 above.

[23] *See* note 10 above.

[24] *See* Supplementary Material .03 at Options 4, Section 5.

[25] *See* note 8 above.

[26] *See* note 9 above.

[27] *See* note 10 above.

*C. Self-Regulatory Organization's Statement on Comments on the Proposed Rule Change Received From Members, Participants, or Others*

No written comments were either solicited or received.

**III. Date of Effectiveness of the Proposed Rule Change and Timing for Commission Action**

Because the foregoing proposed rule change does not: (i) Significantly affect the protection of investors or the public interest; (ii) impose any significant burden on competition; and (iii) become operative for 30 days from the date on which it was filed, or such shorter time as the Commission may designate, it has become effective pursuant to Section 19(b)(3)(A) of the Act [28] and Rule 19b–4(f)(6) thereunder.[29]

A proposed rule change filed pursuant to Rule 19b–4(f)(6) under the Act normally does not become operative for 30 days after the date of its filing. However, Rule 19b–4(f)(6)(iii) [30] permits the Commission to designate a shorter time if such action is consistent with the protection of investors and the public interest. The Exchange has requested that the Commission waive the 30-day operative delay so that the proposal may become operative immediately upon filing. The Commission notes that it recently approved Phlx's substantially similar proposal to list and trade Monday IWM Expirations and Wednesday IWM Expirations.[31] The Exchange has stated that waiver of the operative delay will permit the Exchange to immediately amend NOM Options 4, Section 5 at Supplementary Material .03 to permit the Exchange to offer Monday and Wednesday expirations for options listed pursuant to the Program on IWM similar to Phlx. For these reasons, the Commission believes that the proposed rule change presents no novel issues and that waiver of the 30-day operative delay is consistent with the protection of investors and the public interest, and will allow the Exchange to remain competitive with other exchanges. Accordingly, the Commission hereby waives the operative delay and designates the proposed rule change operative upon filing.[32]

At any time within 60 days of the filing of the proposed rule change, the Commission summarily may temporarily suspend such rule change if it appears to the Commission that such action is necessary or appropriate in the public interest, for the protection of investors, or otherwise in furtherance of the purposes of the Act. If the Commission takes such action, the Commission shall institute proceedings to determine whether the proposed rule change should be approved or disapproved.

**IV. Solicitation of Comments**

Interested persons are invited to submit written data, views, and arguments concerning the foregoing, including whether the proposed rule change is consistent with the Act. Comments may be submitted by any of the following methods:

*Electronic Comments*

- Use the Commission's internet comment form (*http://www.sec.gov/rules/sro.shtml*); or
- Send an email to *rule-comments@sec.gov.* Please include File Number SR–NASDAQ–2021–076 on the subject line.

*Paper Comments*

- Send paper comments in triplicate to Secretary, Securities and Exchange Commission, 100 F Street NE, Washington, DC 20549–1090.

All submissions should refer to File Number SR–NASDAQ–2021–076. This file number should be included on the subject line if email is used. To help the Commission process and review your comments more efficiently, please use only one method. The Commission will post all comments on the Commission's internet website (*http://www.sec.gov/rules/sro.shtml*). Copies of the submission, all subsequent amendments, all written statements with respect to the proposed rule change that are filed with the Commission, and all written communications relating to the proposed rule change between the Commission and any person, other than those that may be withheld from the public in accordance with the provisions of 5 U.S.C. 552, will be available for website viewing and printing in the Commission's Public Reference Room, 100 F Street NE, Washington, DC 20549 on official business days between the hours of 10:00 a.m. and 3:00 p.m. Copies of the filing also will be available for inspection and copying at the principal office of the Exchange. All comments received will be posted without change. Persons submitting comments are cautioned that we do not redact or edit personal identifying information from comment submissions. You should submit only information that you wish to make available publicly. All submissions should refer to File Number SR–NASDAQ–2021–076 and should be submitted on or before October 29, 2021.

For the Commission, by the Division of Trading and Markets, pursuant to delegated authority.[33]

**J. Matthew DeLesDernier,**

*Assistant Secretary.*

[FR Doc. 2021–21991 Filed 10–7–21; 8:45 am]

**BILLING CODE 8011–01–P**

[28] 15 U.S.C. 78s(b)(3)(A).

[29] 17 CFR 240.19b–4(f)(6). In addition, Rule 19b–4(f)(6) requires a self-regulatory organization to give the Commission written notice of its intent to file the proposed rule change at least five business days prior to the date of filing of the proposed rule change, or such shorter time as designated by the Commission. The Exchange has satisfied this requirement.

[30] 17 CFR 240.19b–4(f)(6)(iii).

[31] *See supra* note 3.

[32] For purposes only of waiving the 30-day operative delay, the Commission has also considered the proposed rule's impact on efficiency, competition, and capital formation. *See* 15 U.S.C. 78c(f).

[33] 17 CFR 200.30–3(a)(12).

## SECURITIES AND EXCHANGE COMMISSION

### Sunshine Act Meeting; Cancellation

**FEDERAL REGISTER CITATION OF PREVIOUS ANNOUNCEMENT:** 86 FR 55052, October 5, 2021.

**PREVIOUSLY ANNOUNCED TIME AND DATE OF THE MEETING:** Thursday October 7, 2021 at 2:00 p.m.

**CHANGES IN THE MEETING:** The Closed Meeting scheduled for Thursday, October 7, 2021 at 2:00 p.m., has been cancelled.

**CONTACT PERSON FOR MORE INFORMATION:** For further information; please contact Vanessa A. Countryman from the Office of the Secretary at (202) 551–5400.

*Authority:* 5 U.S.C. 552b.

Dated: October 6, 2021.

**Vanessa A. Countryman,**

*Secretary.*

[FR Doc. 2021–22140 Filed 10–6–21; 2:00 pm]

**BILLING CODE 8011–01–P**

## SECURITIES AND EXCHANGE COMMISSION

**[Release No. 34–93255; File No. SR–CBOE–2021–057]**

## Self-Regulatory Organizations; Cboe Exchange, Inc.; Notice of Filing and Immediate Effectiveness of a Proposed Rule Change To Amend Rule 4.5(d) To Allow Monday and Wednesday Expirations for Options Listed Pursuant to the Short Term Option Series Program on the iShares Russell 2000 ETF (''IWM'')

October 4, 2021.

Pursuant to Section 19(b)(1) of the Securities Exchange Act of 1934 (the ''Act''),[1] and Rule 19b–4 thereunder,[2] notice is hereby given that on October 1, 2021, Cboe Exchange, Inc. (the ''Exchange'' or ''Cboe Options'') filed with the Securities and Exchange Commission (the ''Commission'') the proposed rule change as described in Items I and II below, which Items have been prepared by the Exchange. The Exchange filed the proposal as a ''non-controversial'' proposed rule change pursuant to Section 19(b)(3)(A)(iii) of the Act[3] and Rule 19b–4(f)(6) thereunder.[4] The Commission is publishing this notice to solicit comments on the proposed rule change from interested persons.

### I. Self-Regulatory Organization's Statement of the Terms of Substance of the Proposed Rule Change

Cboe Exchange, Inc. (the ''Exchange'' or ''Cboe Options'') proposes to amend Rule 4.5(d) to allow Monday and Wednesday expirations for options listed pursuant to the Short Term Option Series Program on the iShares Russell 2000 ETF (''IWM''). The text of the proposed rule change is provided in Exhibit 5.

The text of the proposed rule change is also available on the Exchange's website (*http://www.cboe.com/AboutCBOE/CBOELegalRegulatoryHome.aspx*), at the Exchange's Office of the Secretary, and at the Commission's Public Reference Room.

### II. Self-Regulatory Organization's Statement of the Purpose of, and Statutory Basis for, the Proposed Rule Change

In its filing with the Commission, the Exchange included statements concerning the purpose of and basis for the proposed rule change and discussed any comments it received on the proposed rule change. The text of these statements may be examined at the places specified in Item IV below. The Exchange has prepared summaries, set forth in sections A, B, and C below, of the most significant aspects of such statements.

*A. Self-Regulatory Organization's Statement of the Purpose of, and Statutory Basis for, the Proposed Rule Change*

1. Purpose

The Exchange proposes to amend Rule 4.5(d) to allow Monday and Wednesday expirations for options listed pursuant to the Short Term Option Series Program on IWM. The Exchange notes that this proposed rule change is substantively identical to a rule change recently adopted by Nasdaq Phlx LLC. (''Phlx'')[5] and approved by the Securities and Exchange Commission (''Commission'').[6]

Rule 4.5(d) currently governs the Exchange's Short Term Option Series Program. Short Term Option Series are weekly series in an option class that is approved for listing and trading on the Exchange, which may be opened for trading on any Thursday or Friday that is a business day and expires that expire at the close of business on each of the next five Fridays that are business days and are not Fridays on which monthly options series or Quarterly Options Series expire. Rule 4.5(d) also provides that the Exchange may open weekly series for options on the SPDR S&P 500 ETF Trust (''SPY'') and the Invesco QQQ Trust (''QQQ'') with Monday and Wednesday expirations.

The proposed rule change amends Rule 4.5(d) to also allow Monday and Wednesday expiations for options on IWM. Specifically, the proposed rule change amends Rule 4.5(d) to provide that the Exchange may open for trading on any Friday or Monday that is a business day series of options on the SPDR S&P 500 ETF Trust (''SPY'') (''Monday SPY Expiration Opening Date''), the iShares Russell 2000 ETF (''IWM'') (''Monday IWM Expiration Opening Date'') and[7] the Invesco QQQ Trust (''QQQ'') (''Monday QQQ Expiration Opening Date'') that expire at the close of business each of the next five Mondays that are business days and are no Mondays on which Quarterly Options Series expire (''Monday SPY Expirations'', ''Monday IWM Expirations'' and ''Monday QQQ Expirations''), provided that any Monday SPY, IWM and QQQ Expiration Opening Date that is a Friday is one business week and one business day prior to expiration. The Exchange may also open for trading on any Tuesday or Wednesday that is a business day series of SPY options (''Wednesday SPY Expiration Opening Date''), IWM options (''Wednesday IWM Expiration Opening Date'') and QQQ options (''Wednesday QQQ Expiration Opening Date'') that expire at the close of business on each of the next five Wednesdays that are business days and are not Wednesdays on which Quarterly Options Series expire (''Wednesday SPY Expirations'', ''Wednesday IWM Expirations'' and ''Wednesday QQQ Expirations''). The Exchange may have no more than a total of five of each Monday SPY, IWM and QQQ Expirations and no more than a total of five of each Wednesday SPY, IWM and QQQ Expirations. Non-Monday and non-Wednesday SPY, IWM and QQQ Expirations are not included as part of this count. If the Exchange is not open for business on the respective Friday or Monday, the Monday SPY, IWM and QQQ Expiration Opening Date will be the first business day immediately prior to that respective Friday or Monday. If the Exchange is not open for business on a Monday, the expiration date for a Monday SPY, IWM and QQQ Expiration will be the first business day immediately following that Monday. If the Exchange is not open for business on the respective Tuesday or Wednesday, the Wednesday SPY, IWM and QQQ Expiration Opening Date will be the first business day immediately prior to that respective Tuesday or Wednesday. Similarly, if the Exchange is not open for business on a Wednesday, the expiration date for a Wednesday SPY, IWM and QQQ Expiration will be the first business day immediately prior to that Wednesday. Additionally, the proposed rule change amends Rule 4.5(d)(2), which currently excepts Monday and Wednesday SPY and QQQ Expirations from the prohibition on Short Term Option Series expiring in the same week in

[1] 15 U.S.C. 78s(b)(1).

[2] 17 CFR 240.19b–4.

[3] 15 U.S.C. 78s(b)(3)(A)(iii).

[4] 17 CFR 240.19b–4(f)(6).

[5] *See* Securities Exchange Release No. 92655 (August 12, 2021), 86 FR 46304 (August 18, 2021) (SR–Phlx–2021–43) (Notice of Filing of Proposed Rule Change To Permit Monday and Wednesday Expirations for Options Listed Pursuant to the Short Term Option Series Program on the iShares Russell 2000 ETF (''IWM'')).

[6] *See* Securities Exchange Release No. 93157 (September 28, 2021) (SR–Phlx–2021–43) (Order Approving a Proposed Rule Change to Permit Monday and Wednesday Expirations for Options Listed Pursuant to the Short Term Options Program on the iShares Russell 2000 ETF (IWM)).

[7] The proposed rule change makes a nonsubstantive change in order to simplify the rule language.

which monthly option series on the same class expire, to provide that no Short Term Option Series (excluding Monday and Wednesday SPY, IWM and QQQ Expirations) may expire in the same week in which monthly option series on the same class expire.

Similar to SPY and QQQ, the Exchange believes that the introduction of IWM Monday and Wednesday Expirations will expand hedging tools available to market participants and continue to assist in reducing the premium cost of buying protection. By offering Monday and Wednesday IWM Expirations, the proposed rule change will allow market participants to purchase IWM based on their timing needs and allow them to more effectively tailor their investment and hedging strategies.

The Exchange notes that, pursuant to the proposed rule change, if the Exchange is not open for business on a Wednesday, then a Wednesday IWM Expiration will expire on the first business day immediately prior to that Wednesday (*e.g.,* Tuesday of that week). However, regarding Monday IWM Expirations, if the Exchange is not open for business on a Monday, then a Monday IWM Expiration will expire on the first business day following that Monday (*e.g.,* Tuesday of that week). This is the same expiration process currently in place for Monday and Wednesday SPY and QQQ Expirations. The Exchange believes that it is appropriate to require Monday expiration series to expire on the Tuesday of that week, rather than the previous business day (*e.g.,* the previous Friday), when expiration Monday does not fall on a business day because the immediately following Tuesday is closer in time to the scheduled expiration date of the series than the previous Friday. Therefore, the following business day in this case may be more representative of anticipated market conditions than the previous business day. The Exchange notes that, not only are Monday SPY and QQQ Expirations treated in the same manner today, but the same applies to weekly index options listed pursuant to the Nonstandard Expiration Program.[8] The Exchange also notes that permitting Monday and Wednesday IWM Expirations to expire in the same week as monthly options series on the same class, like that of Monday and Wednesday SPY and QQQ Expirations, is appropriate because Monday and Wednesday IWM Expirations and standard monthly options will not expire on the same trading day, as standard monthly options expire on Fridays. Additionally, the Exchange believes that listing Monday and Wednesday IWM Expirations each week of the month will provide consistency for investors and mitigate any potential confusion regarding weekly listings.

The Exchange notes that the interval between strike prices for the proposed Monday and Wednesday IWM Expirations are the same as those for the Monday and Wednesday SPY and QQQ Expirations and the Short Term Option Series with Wednesday and Friday expirations.[9] Specifically, the proposed Monday and Wednesday IWM Expirations have a $0.50 strike interval minimum.[10] As is the case with other equity options series listed pursuant to the Short Term Option Series Program, Monday and Wednesday IWM Expirations are P.M.-settled. Also, pursuant to Rule 4.5(d)(1), the Exchange may open up to 30 Short Term Option Series for each expiration date in each option class eligible for participation in the Short Term Option Series Program. This includes Monday and Wednesday IWM Expirations for IWM options. In addition to the 30 series per class, the Exchange may open Short Term Option Series, including Monday and Wednesday IWM Expirations, that are opened by other securities exchanges in option classes selected by such exchanges under their respective short term option rules.

The Exchange does not believe that listing series of P.M.-settled Monday and Wednesday expirations for options on IWM will have any adverse impact on fair and orderly markets as the Exchange already lists weekly series with the same settlement and expirations for options on SPY and QQQ, as well as for weekly index options pursuant to the Nonstandard Pilot Program,[11] and has not experienced any issues regarding adverse market impact in connection with the listing of these series. The Exchange represents that it has the necessary capacity and surveillance programs in place to support and properly monitor trading in the proposed Monday and Wednesday IWM Expirations. The Exchange currently deploys such surveillance programs to monitor Monday and Wednesday SPY and QQQ Expirations and has not experienced any issues with capacity in connection with listing Monday and Wednesday SPY and QQQ Expirations. The Exchange intends to begin implementation of the proposed rule change on October 5 2021, as Phlx, as well as its affiliated options exchanges, intend to begin listing weekly Wednesday IWM Expirations on this date.[12] The Exchange will issue a notice of the planned implementation date to its Trading Permit Holders (''TPHs'') in advance.[13]

2. Statutory Basis

The Exchange believes the proposed rule change is consistent with the Securities Exchange Act of 1934 (the ''Act'') and the rules and regulations thereunder applicable to the Exchange and, in particular, the requirements of Section 6(b) of the Act.[14] Specifically, the Exchange believes the proposed rule change is consistent with the Section 6(b)(5)[15] requirements that the rules of an exchange be designed to prevent fraudulent and manipulative acts and practices, to promote just and equitable principles of trade, to foster cooperation and coordination with persons engaged in regulating, clearing, settling, processing information with respect to, and facilitating transactions in securities, to remove impediments to and perfect the mechanism of a free and open market and a national market system, and, in general, to protect investors and the public interest. Additionally, the Exchange believes the proposed rule change is consistent with the Section 6(b)(5)[16] requirement that the rules of an exchange not be designed to permit unfair discrimination between customers, issuers, brokers, or dealers.

In particular, the Exchange believes the Short Term Option Series Program has been successful to date and that listing Monday and Wednesday IWM Expirations, like Monday and Wednesday SPY and QQQ Expirations already listed for trading, will expand the ability of investors to effectively hedge risk against market movements stemming from economic releases or market events that occur throughout the month. The Exchange believes that offering Monday and Wednesday IWM Expirations will create greater trading and hedging opportunities and

[8] *See* Rule 4.13(e)(1).

[9] *See* Rule 4.5(d)(5).

[10] *See id.*

[11] *See supra* note 7.

[12] *See* Options Trader Alert #2021—54, Nasdaq Introduces Monday and Wednesday Weekly Expirations For IWM Options (September 22, 2021) available at: *http://www.nasdaqtrader.com/MicroNews.aspx?id=OTA2021-54.* Phlx, BX, NOM, ISE, GEMX, and MRX anticipate listing weekly Wednesday IWM Expirations on October 5, 2021.

[13] *See* Rule 1.5, which provides that the Exchange announces to Trading Permit Holders all determinations it makes pursuant to the Rules via: (1) Specifications, Notices, or Regulatory Circulars with appropriate advanced notice, which are posted on the Exchange's website, or as otherwise provided in the Rules; (2) electronic message; or (3) other communication method as provided in the Rules.

[14] 15 U.S.C. 78f(b).

[15] 15 U.S.C. 78f(b)(5).

[16] *Id.*

flexibility for investors, allowing them to use IWM options listed pursuant to the Short Term Option Series Program in a manner more effectively tailored their investment and hedging objectives. As already noted, the Exchange currently offers series with the same settlement (P.M.) and expirations (Monday and Wednesday) for options on SPY and QQQ and for weekly index options pursuant to the Nonstandard Pilot Program.[17] The Exchange again notes that the proposed rule change is substantively identical to a rule recently adopted by Phlx and approved by the Commission.[18]

The manner in which Monday IWM Expirations will expire when expiration Monday lands on a holiday is consistent with the manner in which Monday SPY and QQQ Expirations currently expire under the same circumstances. The Exchange believes that allowing Monday IWM Expirations that expire on a holiday to fall on the following business day, as opposed to the prior business day (as applicable to Wednesday and Friday expirations that expire on a holiday), removes impediments to and perfects the mechanism of a free and open market and national by permitting such Monday expirations to occur closer in time to the scheduled expiration date of the series, which may be more representative of anticipated market conditions. Additionally, the proposed rule change to except Monday and Wednesday IWM Expirations from the prohibition on Short Term Option Series expiring in the same week in which monthly option series on the same class expire is consistent with the same exception that currently applies to Monday and Wednesday SPY and QQQ Expirations.[19] The proposed rule change is designed to provide consistency for investors and mitigate any potential confusion regarding weekly listings each week of the month.

The Exchange does not believe that listing series of P.M.-settled Monday and Wednesday expirations for options on IWM will have any adverse impact on fair and orderly markets as the Exchange already lists series with the same settlement and expirations for options on SPY and QQQ, as well as for weekly index options pursuant to the Nonstandard Pilot Program,[20] and has not observed any adverse market impact in connection with the listing of these series. The Exchange represents that it already has an adequate surveillance program in place to detect and deter any manipulative trading in Monday and Wednesday expirations, including Monday and Wednesday IWM Expirations, and that it has the necessary systems capacity to support the listing and trading of the new series.

*B. Self-Regulatory Organization's Statement on Burden on Competition*

The Exchange does not believe that the proposed rule change will impose any burden on competition that is not necessary or appropriate in furtherance of the purposes of the Act. The Exchange does not believe that the proposed rule change will impose any burden on intramarket competition that is not necessary or appropriate in furtherance of the purposes of the Act as Monday and Wednesday IWM Expirations will be available for quoting and trading on the Exchange for all market participants. Therefore, all market participants will equally be able to transact in IWM series listed with Monday and Wednesday expirations for trading on the Exchange.

The Exchange does not believe that the proposed rule change will impose any burden on intermarket competition that is not necessary or appropriate in furtherance of the purposes of the Act as it only impacts the permissible expirations for an option series listed on the Exchange. As stated, another options exchange has recently implemented a substantively identical rule to permit Monday and Wednesday IWM expirations on its exchange.[21] As such, this proposal is a competitive response that will permit the Exchange to list the same expirations for series in a multiply-listed option as another options exchange.

*C. Self-Regulatory Organization's Statement on Comments on the Proposed Rule Change Received From Members, Participants, or Others*

The Exchange neither solicited nor received comments on the proposed rule change.

## III. Date of Effectiveness of the Proposed Rule Change and Timing for Commission Action

Because the foregoing proposed rule change does not: (i) Significantly affect the protection of investors or the public interest; (ii) impose any significant burden on competition; and (iii) become operative for 30 days from the date on which it was filed, or such shorter time as the Commission may designate, it has become effective pursuant to Section 19(b)(3)(A) of the Act[22] and Rule 19b–4(f)(6) thereunder.[23]

A proposed rule change filed pursuant to Rule 19b–4(f)(6) under the Act normally does not become operative for 30 days after the date of its filing. However, Rule 19b–4(f)(6)(iii)[24] permits the Commission to designate a shorter time if such action is consistent with the protection of investors and the public interest. The Exchange has requested that the Commission waive the 30-day operative delay so that the proposal may become operative immediately upon filing. The Commission notes that it recently approved Phlx's substantially similar proposal to list and trade Monday IWM Expirations and Wednesday IWM Expirations.[25] The Exchange has stated that waiver of the 30-day operative delay will allow the Exchange to implement the proposal as a competitive response, permitting the Exchange to list the same expirations for series in a multiply-listed option as another options exchange, at the same time that such options exchange intends to list such series. For these reasons, the Commission believes that the proposed rule change presents no novel issues and that waiver of the 30-day operative delay is consistent with the protection of investors and the public interest, and will allow the Exchange to remain competitive with other exchanges. Accordingly, the Commission hereby waives the operative delay and designates the proposed rule change operative upon filing.[26]

At any time within 60 days of the filing of the proposed rule change, the Commission summarily may temporarily suspend such rule change if it appears to the Commission that such action is necessary or appropriate in the public interest, for the protection of investors, or otherwise in furtherance of the purposes of the Act. If the Commission takes such action, the Commission shall institute proceedings to determine whether the proposed rule change should be approved or disapproved.

[17] *See supra* note 8.

[18] *See supra* notes 5 and 6.

[19] As stated herein, because monthly options expire on Fridays, Monday and Wednesday weekly options will not land on the same day.

[20] *See supra* note 8.

[21] *See supra* notes 5 and 6.

[22] 15 U.S.C. 78s(b)(3)(A).

[23] 17 CFR 240.19b–4(f)(6). In addition, Rule 19b–4(f)(6) requires a self-regulatory organization to give the Commission written notice of its intent to file the proposed rule change at least five business days prior to the date of filing of the proposed rule change, or such shorter time as designated by the Commission. The Exchange has satisfied this requirement.

[24] 17 CFR 240.19b–4(f)(6)(iii).

[25] *See* supra note 6.

[26] For purposes only of waiving the 30-day operative delay, the Commission has also considered the proposed rule's impact on efficiency, competition, and capital formation. *See* 15 U.S.C. 78c(f).

## IV. Solicitation of Comments

Interested persons are invited to submit written data, views, and arguments concerning the foregoing, including whether the proposed rule change is consistent with the Act. Comments may be submitted by any of the following methods:

*Electronic Comments*

- Use the Commission's internet comment form (*http://www.sec.gov/rules/sro.shtml*); or
- Send an email to *rule-comments@sec.gov.* Please include File Number SR–CBOE–2021–057 on the subject line.

*Paper Comments*

- Send paper comments in triplicate to Secretary, Securities and Exchange Commission, 100 F Street NE, Washington, DC 20549–1090.

All submissions should refer to File Number SR–CBOE–2021–057. This file number should be included on the subject line if email is used. To help the Commission process and review your comments more efficiently, please use only one method. The Commission will post all comments on the Commission's internet website (*http://www.sec.gov/rules/sro.shtml*). Copies of the submission, all subsequent amendments, all written statements with respect to the proposed rule change that are filed with the Commission, and all written communications relating to the proposed rule change between the Commission and any person, other than those that may be withheld from the public in accordance with the provisions of 5 U.S.C. 552, will be available for website viewing and printing in the Commission's Public Reference Room, 100 F Street NE, Washington, DC 20549 on official business days between the hours of 10:00 a.m. and 3:00 p.m. Copies of the filing also will be available for inspection and copying at the principal office of the Exchange. All comments received will be posted without change. Persons submitting comments are cautioned that we do not redact or edit personal identifying information from comment submissions. You should submit only information that you wish to make available publicly. All submissions should refer to File Number SR–CBOE–2021–057 and should be submitted on or before October 29, 2021.

For the Commission, by the Division of Trading and Markets, pursuant to delegated authority.[27]

**J. Matthew DeLesDernier,**

*Assistant Secretary.*

[FR Doc. 2021–21985 Filed 10–7–21; 8:45 am]

**BILLING CODE 8011–01–P**

---

## SECURITIES AND EXCHANGE COMMISSION

**[Release No. 34–93254; File No. SR–CboeBZX–2021–069]**

## Self-Regulatory Organizations; Cboe BZX Exchange, Inc.; Notice of Filing and Immediate Effectiveness of a Proposed Rule Change To Amend Rule 19.6.05 To Allow Monday and Wednesday Expirations for Options Listed Pursuant to the Short Term Option Series Program on the iShares Russell 2000 ETF (''IWM'')

October 4, 2021.

Pursuant to Section 19(b)(1) of the Securities Exchange Act of 1934 (the ''Act''),[1] and Rule 19b–4 thereunder,[2] notice is hereby given that on October 1, 2021, Cboe BZX Exchange, Inc. (the ''Exchange'' or ''BZX'') filed with the Securities and Exchange Commission (the ''Commission'') the proposed rule change as described in Items I and II below, which Items have been prepared by the Exchange. The Exchange filed the proposal as a ''non-controversial'' proposed rule change pursuant to Section 19(b)(3)(A)(iii) of the Act[3] and Rule 19b–4(f)(6) thereunder.[4] The Commission is publishing this notice to solicit comments on the proposed rule change from interested persons.

### I. Self-Regulatory Organization's Statement of the Terms of Substance of the Proposed Rule Change

Cboe BZX Exchange, Inc. (the ''Exchange'' or ''BZX Options'') proposes to amend Rule 19.6.05 to allow Monday and Wednesday expirations for options listed pursuant to the Short Term Option Series Program on the iShares Russell 2000 ETF (''IWM''). The text of the proposed rule change is provided in Exhibit 5.

The text of the proposed rule change is also available on the Exchange's website (*http://markets.cboe.com/us/equities/regulation/rule_filings/bzx/*), at the Exchange's Office of the Secretary, and at the Commission's Public Reference Room.

### II. Self-Regulatory Organization's Statement of the Purpose of, and Statutory Basis for, the Proposed Rule Change

In its filing with the Commission, the Exchange included statements concerning the purpose of and basis for the proposed rule change and discussed any comments it received on the proposed rule change. The text of these statements may be examined at the places specified in Item IV below. The Exchange has prepared summaries, set forth in sections A, B, and C below, of the most significant aspects of such statements.

*A. Self-Regulatory Organization's Statement of the Purpose of, and Statutory Basis for, the Proposed Rule Change*

1. Purpose

The Exchange proposes to amend Rule 19.6.05 to allow Monday and Wednesday expirations for options listed pursuant to the Short Term Option Series Program on IWM. The Exchange notes that this proposed rule change is substantively identical to a rule change recently adopted by Nasdaq Phlx LLC. (''Phlx'')[5] and approved by the Securities and Exchange Commission (''Commission'').[6]

Rule 19.6.05[7] currently governs the Exchange's Short Term Option Series Program. The term ''Short Term Option Series'' means a series in an option class that is approved for listing and trading on the Exchange in which the series is opened for trading on any Monday, Tuesday, Wednesday, Thursday or Friday that is a business day and that expires on the Monday, Wednesday or Friday of the next business week, or, in the case of a series that is listed on a Friday and expires on a Monday, is listed one business week and one business day prior to that expiration. If a Tuesday, Wednesday, Thursday or Friday is not a business day, the series may be opened (or shall expire) on the first business day immediately prior to that Tuesday, Wednesday, Thursday or Friday, respectively. For a series listed pursuant to this section for Monday

---

[27] 17 CFR 200.30–3(a)(12).

[1] 15 U.S.C. 78s(b)(1).

[2] 17 CFR 240.19b–4.

[3] 15 U.S.C. 78s(b)(3)(A)(iii).

[4] 17 CFR 240.19b–4(f)(6).

[5] *See* Securities Exchange Release No. 92655 (August 12, 2021), 86 FR 46304 (August 18, 2021) (SR–Phlx–2021–43) (Notice of Filing of Proposed Rule Change To Permit Monday and Wednesday Expirations for Options Listed Pursuant to the Short Term Option Series Program on the iShares Russell 2000 ETF (''IWM'')).

[6] *See* Securities Exchange Release No. 93157 (September 28, 2021) (SR–Phlx–2021–43) (Order Approving a Proposed Rule Change to Permit Monday and Wednesday Expirations for Options Listed Pursuant to the Short Term Options Program on the iShares Russell 2000 ETF (IWM)).

[7] The proposed rule change corrects an incorrect cross-reference in Rule 19.05 [sic].

expiration, if a Monday is not a business day, the series shall expire on the first business day immediately following that Monday.[8] Rule 19.6.05(h) provides that the Exchange may open weekly series for options on the SPDR S&P 500 ETF Trust (''SPY'') and the Invesco QQQ Trust (''QQQ'') with Monday and Wednesday expirations.

The proposed rule change amends Rule 19.6.05(h) to also allow Monday and Wednesday expirations for options on IWM. Specifically, the proposed rule change amends Rule 19.6.05(h) to provide that the Exchange may open for trading on any Friday or Monday that is a business day series of options on the SPDR S&P 500 ETF Trust (''SPY''), the iShares Russell 2000 ETF (''IWM'') and [9] the Invesco QQQ Trust (''QQQ'') to expire on any Monday of the month that is a business day and is not a Monday on which Quarterly Options Series expire (''Monday SPY Expirations'', ''Monday IWM Expirations'' and ''Monday QQQ Expirations''), provided that any Friday on which the Exchange opens for trading a Monday SPY, IWM and QQQ Expiration is one business week and one business day prior to expiration. The Exchange may also open for trading on any Tuesday or Wednesday that is a business day series of SPY options, IWM options and QQQ options to expire on any Wednesday of the month that is a business day and is not a Wednesday on which Quarterly Options Series expire (''Wednesday SPY Expirations'', ''Wednesday IWM Expirations'' and ''Wednesday QQQ Expirations''). The Exchange may list up to five consecutive series of each Monday SPY, IWM and QQQ Expirations and up to five consecutive series of each Wednesday SPY, IWM and QQQ Expirations at one time; the Exchange may have no more than a total of five of each Monday SPY, IWM and QQQ Expirations and no more than a total of five of each Wednesday SPY, IWM and QQQ Expirations. Monday and Wednesday SPY, IWM and QQQ Expirations will be subject to the provisions of this Rule.[10] Additionally, the proposed rule change amends Rule 19.6.05(b), which currently excepts Monday and Wednesday SPY and QQQ Expirations from the prohibition on Short Term Option Series expiring in the same week in which monthly option series on the same class expire, to provide that, with the exception of Monday and Wednesday SPY, IWM and QQQ Expirations, no Short Term Option Series may expire in the same week in which monthly option series on the same class expire.

Similar to SPY and QQQ, the Exchange believes that the introduction of IWM Monday and Wednesday Expirations will expand hedging tools available to market participants and continue to assist in reducing the premium cost of buying protection. By offering Monday and Wednesday IWM Expirations, the proposed rule change will allow market participants to purchase IWM based on their timing needs and allow them to more effectively tailor their investment and hedging strategies.

The Exchange notes that, pursuant to the definition of Short Term Option Series,[11] if the Exchange is not open for business on a Wednesday, then a Wednesday IWM Expiration will expire on the first business day immediately prior to that Wednesday (*e.g.,* Tuesday of that week). However, regarding Monday IWM Expirations, if the Exchange is not open for business on a Monday, then a Monday IWM Expiration will expire on the first business day following that Monday (*e.g.,* Tuesday of that week). This is the same expiration process currently in place for Monday and Wednesday SPY and QQQ Expirations. The Exchange believes that it is appropriate to require Monday expiration series to expire on the Tuesday of that week, rather than the previous business day (*e.g.,* the previous Friday), when expiration Monday does not fall on a business day because the immediately following Tuesday is closer in time to the scheduled expiration date of the series than the previous Friday. Therefore, the following business day in this case may be more representative of anticipated market conditions than the previous business day. The Exchange notes that, not only are Monday SPY and QQQ Expirations treated in the same manner today, but the same applies to weekly index options listed pursuant to the Nonstandard Expiration Program.[12] The Exchange also notes that permitting Monday and Wednesday IWM Expirations to expire in the same week as monthly options series on the same class, like that of Monday and Wednesday SPY and QQQ Expirations, is appropriate because Monday and Wednesday IWM Expirations and standard monthly options will not expire on the same trading day, as standard monthly options expire on Fridays. Additionally, the Exchange believes that listing Monday and Wednesday IWM Expirations each week of the month will provide consistency for investors and mitigate any potential confusion regarding weekly listings.

The Exchange notes that the interval between strike prices for the proposed Monday and Wednesday IWM Expirations are the same as those for the Monday and Wednesday SPY and QQQ Expirations and the Short Term Option Series with Wednesday and Friday expirations.[13] Specifically, the proposed Monday and Wednesday IWM Expirations have a $0.50 strike interval minimum.[14] As is the case with other equity options series listed pursuant to the Short Term Option Series Program, Monday and Wednesday IWM Expirations are P.M.-settled. Also, pursuant to Rule 19.6.05(a), the Exchange may open up to 30 Short Term Option Series for each expiration date in each option class eligible for participation in the Short Term Option Series Program. This includes Monday and Wednesday IWM Expirations for IWM options. In addition to the 30 series per class, the Exchange may open Short Term Option Series, including Monday and Wednesday IWM Expirations, that are opened by other securities exchanges in option classes selected by such exchanges under their respective short term option rules.

The Exchange does not believe that listing series of P.M.-settled Monday and Wednesday expirations for options on IWM will have any adverse impact on fair and orderly markets as the Exchange already lists weekly series with the same settlement and expirations for options on SPY and QQQ, as well as for weekly index options pursuant to the Nonstandard Pilot Program,[15] and has not experienced any issues regarding adverse market impact in connection with the listing of these series. The Exchange represents that it has the necessary capacity and surveillance programs in place to support and properly monitor trading in the proposed Monday and Wednesday IWM Expirations. The Exchange currently deploys such surveillance programs to monitor Monday and Wednesday SPY and QQQ Expirations and has not experienced any issues with capacity in connection with listing Monday and Wednesday SPY and QQQ Expirations. The Exchange intends to begin

[8] *See* Rule 16.1, definition of ''Short Term Option Series''.

[9] The proposed rule change makes a nonsubstantive change in order to simplify the rule language.

[10] The proposed rule change also updates a reference to ''Monday or Wednesday SPY and QQQ Expirations'' in Rule 19.6.05 to refer to ''Monday or Wednesday SPY, IWM and QQQ Expirations''.

[11] *See supra* note 8.

[12] *See* Rule 29.11(j)(1).

[13] *See* Rule 19.6.05(e).

[14] *See id.*

[15] *See supra* note 12.

implementation of the proposed rule change on October 5, 2021, as Phlx, as well as its affiliated options exchanges, intend to begin listing weekly Monday IWM Expirations on this date.[16] The Exchange will issue a notice of the planned implementation date to its Members in advance.

2. Statutory Basis

The Exchange believes the proposed rule change is consistent with the Securities Exchange Act of 1934 (the ''Act'') and the rules and regulations thereunder applicable to the Exchange and, in particular, the requirements of Section 6(b) of the Act.[17] Specifically, the Exchange believes the proposed rule change is consistent with the Section 6(b)(5)[18] requirements that the rules of an exchange be designed to prevent fraudulent and manipulative acts and practices, to promote just and equitable principles of trade, to foster cooperation and coordination with persons engaged in regulating, clearing, settling, processing information with respect to, and facilitating transactions in securities, to remove impediments to and perfect the mechanism of a free and open market and a national market system, and, in general, to protect investors and the public interest. Additionally, the Exchange believes the proposed rule change is consistent with the Section 6(b)(5)[19] requirement that the rules of an exchange not be designed to permit unfair discrimination between customers, issuers, brokers, or dealers.

In particular, the Exchange believes the Short Term Option Series Program has been successful to date and that listing Monday and Wednesday IWM Expirations, like Monday and Wednesday SPY and QQQ Expirations already listed for trading, will expand the ability of investors to effectively hedge risk against market movements stemming from economic releases or market events that occur throughout the month. The Exchange believes that offering Monday and Wednesday IWM Expirations will create greater trading and hedging opportunities and flexibility for investors, allowing them to use IWM options listed pursuant to the Short Term Option Series Program in a manner more effectively tailored their investment and hedging objectives. As already noted, the Exchange currently offers series with the same settlement (P.M.) and expirations (Monday and Wednesday) for options on SPY and QQQ and for weekly index options pursuant to the Nonstandard Pilot Program.[20] The Exchange again notes that the proposed rule change is substantively identical to a rule recently adopted by Phlx and approved by the Commission.[21]

The manner in which Monday IWM Expirations will expire when expiration Monday lands on a holiday is consistent with the manner in which Monday SPY and QQQ Expirations currently expire under the same circumstances. The Exchange believes that allowing Monday IWM Expirations that expire on a holiday to fall on the following business day, as opposed to the prior business day (as applicable to Wednesday and Friday expirations that expire on a holiday), removes impediments to and perfects the mechanism of a free and open market and national by permitting such Monday expirations to occur closer in time to the scheduled expiration date of the series, which may be more representative of anticipated market conditions. Additionally, the proposed rule change to except Monday and Wednesday IWM Expirations from the prohibition on Short Term Option Series expiring in the same week in which monthly option series on the same class expire is consistent with the same exception that currently applies to Monday and Wednesday SPY and QQQ Expirations.[22] The proposed rule change is designed to provide consistency for investors and mitigate any potential confusion regarding weekly listings each week of the month.

The Exchange does not believe that listing series of P.M.-settled Monday and Wednesday expirations for options on IWM will have any adverse impact on fair and orderly markets as the Exchange already lists series with the same settlement and expirations for options on SPY and QQQ, as well as for weekly index options pursuant to the Nonstandard Pilot Program,[23] and has not observed any adverse market impact in connection with the listing of these series. The Exchange represents that it already has an adequate surveillance program in place to detect and deter any manipulative trading in Monday and Wednesday expirations, including Monday and Wednesday IWM Expirations, and that it has the necessary systems capacity to support the listing and trading of the new series.

*B. Self-Regulatory Organization's Statement on Burden on Competition*

The Exchange does not believe that the proposed rule change will impose any burden on competition that is not necessary or appropriate in furtherance of the purposes of the Act. The Exchange does not believe that the proposed rule change will impose any burden on intramarket competition that is not necessary or appropriate in furtherance of the purposes of the Act as Monday and Wednesday IWM Expirations will be available for quoting and trading on the Exchange for all market participants. Therefore, all market participants will equally be able to transact in IWM series listed with Monday and Wednesday expirations for trading on the Exchange.

The Exchange does not believe that the proposed rule change will impose any burden on intermarket competition that is not necessary or appropriate in furtherance of the purposes of the Act as it only impacts the permissible expirations for an option series listed on the Exchange. As stated, another options exchange has recently implemented a substantively identical rule to permit Monday and Wednesday IWM expirations on its exchange.[24] As such, this proposal is a competitive response that will permit the Exchange to list the same expirations for series in a multiply-listed option as another options exchange.

*C. Self-Regulatory Organization's Statement on Comments on the Proposed Rule Change Received From Members, Participants, or Others*

The Exchange neither solicited nor received comments on the proposed rule change.

**III. Date of Effectiveness of the Proposed Rule Change and Timing for Commission Action**

Because the foregoing proposed rule change does not: (i) Significantly affect the protection of investors or the public interest; (ii) impose any significant burden on competition; and (iii) become operative for 30 days from the date on which it was filed, or such shorter time as the Commission may designate, it has become effective pursuant to Section

[16] *See* Options Trader Alert #2021—54, Nasdaq Introduces Monday and Wednesday Weekly Expirations For IWM Options (September 22, 2021) available at: *http://www.nasdaqtrader.com/MicroNews.aspx?id=OTA2021-54.* Phlx, BX, NOM, ISE, GEMX, and MRX anticipate listing weekly Wednesday IWM Expirations on October 5, 2021.

[17] 15 U.S.C. 78f(b).

[18] 15 U.S.C. 78f(b)(5).

[19] *Id.*

[20] *See supra* note 12.

[21] *See supra* notes 5 and 6.

[22] As stated herein, because monthly options expire on Fridays, Monday and Wednesday weekly options will not land on the same day.

[23] *See supra* note 12.

[24] *See supra* notes 5 and 6.

19(b)(3)(A) of the Act [25] and Rule 19b–4(f)(6) thereunder.[26]

A proposed rule change filed pursuant to Rule 19b–4(f)(6) under the Act normally does not become operative for 30 days after the date of its filing. However, Rule 19b–4(f)(6)(iii) [27] permits the Commission to designate a shorter time if such action is consistent with the protection of investors and the public interest. The Exchange has requested that the Commission waive the 30-day operative delay so that the proposal may become operative immediately upon filing. The Commission notes that it recently approved Phlx's substantially similar proposal to list and trade Monday IWM Expirations and Wednesday IWM Expirations.[28] The Exchange has stated that waiver of the 30-day operative delay will allow the Exchange to implement the proposal as a competitive response, permitting the Exchange to list the same expirations for series in a multiply-listed option as another options exchange, at the same time that such options exchange intends to list such series. For these reasons, the Commission believes that the proposed rule change presents no novel issues and that waiver of the 30-day operative delay is consistent with the protection of investors and the public interest, and will allow the Exchange to remain competitive with other exchanges. Accordingly, the Commission hereby waives the operative delay and designates the proposed rule change operative upon filing.[29]

At any time within 60 days of the filing of the proposed rule change, the Commission summarily may temporarily suspend such rule change if it appears to the Commission that such action is necessary or appropriate in the public interest, for the protection of investors, or otherwise in furtherance of the purposes of the Act. If the Commission takes such action, the Commission shall institute proceedings to determine whether the proposed rule change should be approved or disapproved.

[25] 15 U.S.C. 78s(b)(3)(A).

[26] 17 CFR 240.19b–4(f)(6). In addition, Rule 19b–4(f)(6) requires a self-regulatory organization to give the Commission written notice of its intent to file the proposed rule change at least five business days prior to the date of filing of the proposed rule change, or such shorter time as designated by the Commission. The Exchange has satisfied this requirement.

[27] 17 CFR 240.19b–4(f)(6)(iii).

[28] *See* supra note 6.

[29] For purposes only of waiving the 30-day operative delay, the Commission has also considered the proposed rule's impact on efficiency, competition, and capital formation. *See* 15 U.S.C. 78c(f).

## IV. Solicitation of Comments

Interested persons are invited to submit written data, views, and arguments concerning the foregoing, including whether the proposed rule change is consistent with the Act. Comments may be submitted by any of the following methods:

*Electronic Comments*

- Use the Commission's internet comment form (*http://www.sec.gov/rules/sro.shtml*); or
- Send an email to *rule-comments@sec.gov.* Please include File Number SR–CboeBZX–2021–069 on the subject line.

*Paper Comments*

- Send paper comments in triplicate to Secretary, Securities and Exchange Commission, 100 F Street NE, Washington, DC 20549–1090.

All submissions should refer to File Number SR–CboeBZX–2021–069. This file number should be included on the subject line if email is used. To help the Commission process and review your comments more efficiently, please use only one method. The Commission will post all comments on the Commission's internet website (*http://www.sec.gov/rules/sro.shtml*). Copies of the submission, all subsequent amendments, all written statements with respect to the proposed rule change that are filed with the Commission, and all written communications relating to the proposed rule change between the Commission and any person, other than those that may be withheld from the public in accordance with the provisions of 5 U.S.C. 552, will be available for website viewing and printing in the Commission's Public Reference Room, 100 F Street NE, Washington, DC 20549 on official business days between the hours of 10:00 a.m. and 3:00 p.m. Copies of the filing also will be available for inspection and copying at the principal office of the Exchange. All comments received will be posted without change. Persons submitting comments are cautioned that we do not redact or edit personal identifying information from comment submissions. You should submit only information that you wish to make available publicly. All submissions should refer to File Number SR–CboeBZX–2021–069 and should be submitted on or before October 29, 2021.

For the Commission, by the Division of Trading and Markets, pursuant to delegated authority.[30]

**J. Matthew DeLesDernier,**

*Assistant Secretary.*

[FR Doc. 2021–21993 Filed 10–7–21; 8:45 am]

**BILLING CODE 8011–01–P**

[30] 17 CFR 200.30–3(a)(12).

---

## SECURITIES AND EXCHANGE COMMISSION

**[Release No. 34–93256; File No. SR–NASDAQ–2021–007]**

## Self-Regulatory Organizations; The Nasdaq Stock Market LLC; Order Granting Approval of a Proposed Rule Change To Adopt Additional Initial Listing Criteria for Companies Primarily Operating in Jurisdictions That Do Not Provide the PCAOB With the Ability To Inspect Public Accounting Firms

October 4, 2021.

## I. Introduction

On February 1, 2021, The Nasdaq Stock Market LLC (''Nasdaq'' or ''Exchange'') filed with the Securities and Exchange Commission (''Commission''), pursuant to Section 19(b)(1) of the Securities Exchange Act of 1934 (''Act'') [1] and Rule 19b–4 thereunder,[2] a proposed rule change to adopt additional initial listing criteria for companies primarily operating in jurisdictions that do not provide the Public Company Accounting Oversight Board (''PCAOB'') with the ability to inspect public accounting firms. The proposed rule change was published for comment in the **Federal Register** on February 16, 2021.[3] On March 26, 2021, pursuant to Section 19(b)(2) of the Act,[4] the Commission designated a longer period within which to approve the proposed rule change, disapprove the proposed rule change, or institute proceedings to determine whether to disapprove the proposed rule change.[5] On May 17, 2021, the Commission instituted proceedings to determine whether to approve or disapprove the

[1] 15 U.S.C. 78s(b)(1).

[2] 17 CFR 240.19b–4.

[3] *See* Securities Exchange Act Release No. 91089 (February 9, 2021), 86 FR 9549 (''Notice''). Comments on the proposed rule change can be found at: *https://www.sec.gov/comments/sr-nasdaq-2021-007/srnasdaq2021007.htm.*

[4] 15 U.S.C. 78s(b)(2).

[5] *See* Securities Exchange Act Release No. 91413, 86 FR 17263 (April 1, 2021). The Commission designated May 17, 2021 as the date by which the Commission shall approve or disapprove, or institute proceedings to determine whether to approve or disapprove, the proposed rule change.

proposed rule change.[6] This order approves the proposed rule change.

## II. Description of the Proposed Rule Change

The Exchange states that the Exchange's rules, in addition to federal securities laws, require that a company's financial statements included in its initial registration statement or annual report be audited by an independent public accountant that is registered with the PCAOB.[7] According to the Exchange, the Exchange and investors rely on the work of auditors to provide reasonable assurances that the financial statements provided by a company are free of material misstatements, and on the PCAOB's critical role in overseeing the quality of the auditor's work.[8] The Exchange states its belief that accurate financial statement disclosure is critical for investors to make informed investment decisions.[9]

The Exchange states that the former Chairman and former Chief Accountant of the Commission and the former Chairman of the PCAOB have raised concerns that national barriers on access to information can impede effective regulatory oversight of U.S.-listed companies with operations in certain countries, including the PCAOB's inability to inspect the audit work and practices of auditors in those countries.[10] The Exchange states that similar concerns have been expressed by members of Congress, the State Department, and the President's Working Group on Financial Markets.[11] The Exchange states that it shares these concerns and believes the lack of transparency from certain markets raises concerns about the accuracy of disclosures, accountability, and access to information, particularly when a company is based in a jurisdiction that does not provide the PCAOB with access to conduct inspections of public accounting firms that audit Nasdaq-listed companies (''Restrictive Market'').[12]

The Exchange further states that such concerns can be compounded when a company from a Restrictive Market lists on the Exchange through an initial public offering (''IPO'') or a business combination with a small offering size or a low public float percentage because such companies may not attract market attention and develop sufficient public float, investor base, and trading interest to provide the depth and liquidity necessary to promote fair and orderly trading.[13] According to the Exchange, such securities may trade infrequently, in a more volatile manner and with a wider bid-ask spread, all of which may result in trading at a price that may not reflect their true market value.[14] Furthermore, the Exchange states that less liquid securities may be more susceptible to price manipulation and that, in particular, the risk of price manipulation due to insider trading is more acute with respect to a company that principally administers its business in a Restrictive Market (''Restrictive Market Company''), particularly if a company's financial statements contain undetected material misstatements due to error or fraud and the PCAOB is unable to inspect the company's auditor to determine if it complied with PCAOB and Commission rules and professional standards in connection with its performance of audits.[15] The Exchange states that risk to investors in such cases may be compounded because regulatory investigations into price manipulation, insider trading, and compliance concerns may be impeded and investor protections and remedies may be limited in such cases due to obstacles encountered by U.S. authorities in bringing or enforcing actions against the companies and insiders.[16]

Nasdaq states that it believes the U.S. capital markets can provide Restrictive Market Companies with access to additional capital to fund ground-breaking research and technological advancements and that such companies provide U.S. investors with opportunities to diversify their portfolio by providing exposure to Restrictive Markets.[17] However, Nasdaq further states that it believes that Restrictive Market Companies present unique potential risks to U.S. investors due to restrictions on the PCAOB's ability to inspect the audit work and practices of auditors in those countries, which create concerns about the accuracy of disclosures, accountability, and access to information.[18] Nasdaq states that it believes its proposal will reduce trading volatility and price manipulation and help to ensure that Restrictive Market Companies have sufficient investor base and public float to support fair and orderly trading on the Exchange.[19]

Specifically, the Exchange proposes to adopt a definition of ''Restrictive Market'' [20] and to apply additional initial listing requirements to a Restrictive Market Company listing on the Exchange in connection with an IPO or a business combination.[21] The

[6] *See* Securities Exchange Act Release No. 91904, 86 FR 27659 (May 21, 2021).

[7] *See* Notice, *supra* note 3, at 9549. *See also* Nasdaq Rules 5210(b) and 5250(c)(3) (requiring for initial and continued listing on Nasdaq that companies must be audited by an independent public accountant that is registered as a public accounting firm with the PCAOB); 15 U.S.C. 7212(a) (Registration with the PCAOB); 17 CFR 210.2–01 (Qualifications of Accountants).

[8] *See* Notice, *supra* note 3, at 9550.

[9] *See id.*

[10] *See id.* (citing to various statements by former Commission Chairman Jay Clayton, former Commission Chief Accountant Wes Bricker, and former PCAOB Chairman William D. Duhnke III, available at *https://www.sec.gov/news/public-statement/statement-vital-role-audit-quality-and-regulatory-access-audit-and-other; https://www.sec.gov/news/public-statement/emerging-market-investments-disclosure-reporting;* and *https://www.sec.gov/news/public-statement/clayton-emerging-markets-roundtable-2020-07-09*). See *id.* at 9550, n.8.

[11] *See id.* at 9550 (citing to ''Congress Passes Legislation to De-List Chinese Companies Unless U.S. Has Access to Audit Workpapers'' (December 2, 2020), available at *https://sherman.house.gov/media-center/press-releases/congress-passes-legislation-to-de-list-chinese-companies-unless-us-has;* Former Commission Chairman Jay Clayton, ''Statement after the Enactment of the Holding Foreign Companies Accountable Act'' (December 18, 2020), available at *https://www.sec.gov/news/public-statement/clayton-hfcaa-2020-12#_ftn5;* Press Statement of Michael R. Pompeo, Former Secretary of State, New Nasdaq Restrictions Affecting Listing of Chinese Companies (June 4, 2020), available at *https://2017-2021-translations.state.gov/2020/06/04/new-nasdaq-restrictions-affecting-listing-of-chinese-companies/index.html;* President's Working Group on Financial Markets: Report on Protecting United States Investors from Significant Risks from Chinese Companies (July 24, 2020), available at *https://home.treasury.gov/system/files/136/PWG-Report-on-Protecting-United-States-Investors-from-Significant-Risks-from-Chinese-Companies.pdf*). *See id.* at 9550, nn.9–11.

[12] *See id.* at 9550.

[13] *See id.*

[14] *See id.* The Exchange also states that foreign issuers are more likely to issue a portion of an offering to investors in their home country, which raises concerns that such investors will not contribute to the liquidity of the security in the U.S. secondary market. *See id.*

[15] *See id.*

[16] *See id.*

[17] *See id.* at 9553–54. *See also* Letter from Jeffrey S. Davis, Senior Vice President, General Counsel, Nasdaq, Inc. (April 30, 2021) (''Nasdaq Response Letter''), at 2.

[18] *See* Notice, *supra* note 3, at 9554.

[19] *See id. See also* Nasdaq Response Letter, *supra* note 17, at 3.

[20] *See infra* note 24 and accompanying text.

[21] The Exchange states that, currently, it may rely upon its discretionary authority under Nasdaq Rule 5101 to deny initial listing or apply additional or more stringent criteria when it is concerned that a small offering size for an IPO may not reflect the company's initial valuation or may not ensure sufficient liquidity to support trading in the secondary market. Pursuant to Nasdaq Rule 5101, Nasdaq has broad discretionary authority over the initial and continued listing of securities in Nasdaq in order to maintain the quality of and public confidence in its market, to prevent fraudulent and manipulative acts and practices, to promote just and equitable principles of trade, and to protect investors and the public interest. Nasdaq may use such discretion to deny initial listing, apply additional or more stringent criteria for the initial or continued listing of particular securities, or suspend or delist particular securities based on any event, condition, or circumstance that exists or occurs that makes initial or continued listing of the securities on Nasdaq inadvisable or unwarranted in

Continued

Exchange also proposes to prohibit a Restrictive Market Company from listing on the Nasdaq Capital Market in connection with a Direct Listing,[22] but to allow a Restrictive Market Company to list on the Nasdaq Global Select Market or Nasdaq Global Market in connection with a Direct Listing, provided that such company meets all applicable initial listing requirements for such market.

*A. Definition of Restrictive Market*

The Exchange proposes to adopt a new definition of Restrictive Market in Nasdaq Rule 5005(a)(37).[23] As proposed, a Restrictive Market will be defined as a jurisdiction that does not provide the PCAOB with access to conduct inspections of public accounting firms that audit Nasdaq-listed companies.[24] Under the proposed rule, Nasdaq will consider a company's business to be principally administered in a Restrictive Market if: (i) The company's books and records are located in that jurisdiction; (ii) at least 50% of the company's assets are located in such jurisdiction; or (iii) at least 50% of the company's revenues are derived from such jurisdiction.[25]

*B. Minimum Offering Size or Public Float Percentage Requirement for an IPO*

The Exchange proposes to adopt new Nasdaq Rule 5210(k)(i) to require a Restrictive Market Company listing its Primary Equity Security[26] on Nasdaq in connection with its IPO to offer a minimum amount of securities in a Firm Commitment Offering[27] in the U.S. to Public Holders[28] that (i) will result in gross proceeds to the Company of at least $25 million or (ii) will represent at least 25% of the Company's post-offering Market Value of Listed Securities,[29] whichever is lower. A Restrictive Market Company listing on the Exchange in connection with an IPO that is subject to the proposed rule would also need to comply with all other applicable listing requirements.[30] The Exchange states that it believes this proposed listing requirement for Restrictive Market Companies conducting an IPO will provide greater support for the company's price, as determined through the offering, and will help assure there will be sufficient liquidity, U.S. investor interest, and distribution to support price discovery once the security is listed.[31] In addition, the Exchange states that the proposal will help ensure that Restrictive Market Companies seeking to list on the Exchange have sufficient investor base and public float to support fair and orderly trading on the Exchange.[32]

The Exchange further states that it has observed that Restrictive Market Companies listing on Nasdaq in connection with an IPO with an offering size below $25 million or public float ratio below 25% have a high rate of compliance concerns.[33] The Exchange states that it believes the proposed listing requirement for Restrictive Market Companies conducting an IPO will mitigate such compliance concerns.[34]

the opinion of Nasdaq, even though the securities meet all enumerated criteria for initial or continued listing on Nasdaq. *See* Nasdaq Rule 5101.

[22] Nasdaq defines ''Direct Listing'' as the listing of ''companies that have sold common equity securities in private placements, which have not been listed on a national securities exchange or traded in the over-the-counter market pursuant to FINRA Form 211 immediately prior to the initial pricing.'' *See* Nasdaq Rule IM–5315–1.

[23] The Exchange proposes to renumber current paragraphs (a)(37) through (a)(46) of Nasdaq Rule 5005 in connection with the addition of the definition of Restrictive Market. *See* Notice, *supra* note 3, at 9551.

[24] *See* proposed Nasdaq Rule 5005(a)(37). The Exchange states that the PCAOB maintains a map of where it can and cannot conduct oversight activities on its website and publishes a list identifying the public companies for which a PCAOB-registered public accounting firm signed and issued an audit report and is located in a jurisdiction where obstacles to PCAOB inspections exist. *See* Notice, *supra* note 3, at 9551.

[25] *See* proposed Nasdaq Rule 5005(a)(37). The term ''Company'' means the issuer of a security listed or applying to list on Nasdaq. *See* Nasdaq Rule 5005(a)(6). The Exchange provides the following examples. Company X's books and records are located in Country Y, which is not a Restrictive Market, while 90% of its revenues are driven from operations in Country Z, which is a Restrictive Market. Nasdaq would consider Company X's business to be principally administered in Country Z, so Company X would be considered a Restrictive Market Company. Alternatively, Company A's books and records are located in Country B, which is a Restrictive Market, but 90% of its revenues are derived from Country C, which is not a Restrictive Market. Nasdaq would consider Company A's business to be principally administered in Country B, so Company A would be considered a Restrictive Market Company. *See* Notice, *supra* note 3, at 9551.

[26] Nasdaq Rule 5005(a)(33) defines ''Primary Equity Security'' as ''a Company's first class of Common Stock, Ordinary Shares, Shares or Certificates of Beneficial Interest of Trust, Limited Partnership Interests or American Depositary Receipts (ADR) or Shares (ADS).''

[27] Nasdaq Rule 5005(a)(17) defines ''Firm Commitment Offering'' as ''an offering of securities by participants in a selling syndicate under an agreement that imposes a financial commitment on participants in such syndicate to purchase such securities.''

[28] Nasdaq Rule 5005(a)(36) defines ''Public Holders'' as ''holders of a security that includes both beneficial holders and holders of record, but does not include any holder who is, either directly or indirectly, an Executive Officer, director, or the beneficial holder of more than 10% of the total shares outstanding.''

[29] ''Market Value'' means the consolidated closing bid price multiplied by the measure to be valued. *See* Nasdaq Rule 5000(a)(23). ''Listed Securities'' means securities listed on Nasdaq or another national securities exchange. *See* Nasdaq Rule 5000(a)(22).

[30] The Exchange provides the following examples to illustrate the proposed rule. First, Company X, which principally administers its business in a Restrictive Market, is applying to list on Nasdaq Global Market and has an expected post-offering Market Value of Listed Securities of $75,000,000. Since 25% of $75,000,000 is $18,750,000, which is lower than $25,000,000, pursuant to the requirements of the proposed rule, Company X would be eligible to list based on a Firm Commitment Offering in the U.S. to Public Holders of at least $18,750,000. Company X would also need to comply with the other applicable listing requirements of the Nasdaq Global Market, including a Market Value of Unrestricted Publicly Held Shares of at least $8 million. *See* Notice, *supra* note 3, at 9551; Nasdaq Rule 5405(b)(1)(C). *See also* Nasdaq Rules 5005(a)(45) (definition of ''Unrestricted Publicly Held Shares''), 5005(a)(46) (definition of ''Unrestricted Securities''), and 5005(a)(37) (definition of ''Restricted Securities''). As another example, Company Y, which also principally administers its business in a Restrictive Market, is applying to list on the Nasdaq Global Select Market and its post-offering Market Value of Listed Securities is expected to be $200,000,000. Since 25% of $200,000,000 is $50,000,000, which is higher than $25,000,000, pursuant to the requirements of the proposed rule, Company Y would be eligible to list based on a Firm Commitment Offering in the U.S. to Public Holders that will result in gross proceeds of at least $25,000,000. Company Y would also need to comply with the other applicable listing requirements of the Nasdaq Global Select Market, including a Market Value of Unrestricted Publicly Held Shares of at least $45 million. *See* Notice, *supra* note 3, at 9551–52; Nasdaq Rule 5315(f)(2)(C).

[31] *See* Notice, *supra* note 3, at 9552.

[32] *See id.*

[33] *See id.* Specifically, the Exchange states that 39 out of 113 Restrictive Market Companies that listed on Nasdaq through an IPO from January 1, 2015 to September 30, 2020 would not have qualified under the requirement in proposed Nasdaq Rule 5210(k)(i) because they had offering amounts of $25 million or less. According to Nasdaq, two of these companies were considered to be Restrictive Market Companies because they had at least 50% of the company's assets located in a Restrictive Market, and 37 met the definition because they had at least 50% of the company's revenues derived from a Restrictive Market. Of those companies that would not have qualified under the requirement in proposed Nasdaq Rule 5210(k)(i), twenty, or 51%, were cited for a compliance issue, which Nasdaq states is a significantly higher rate than other Restrictive Market Companies (16%). The Exchange also states that, during the same period, 25 out of 84 (or 30%) of Restrictive Market Companies that had a ratio of offering size to Market Value of Listed Securities of 25% or less failed to comply with one or more listing standards after listing, which, according to the Exchange, is a significantly higher non-compliance rate than for other foreign companies (11%) and other Restrictive Market Companies (21%) that had such listings. The Exchange also found that, during the same period, 35 Restrictive Market Companies would not have met either the $25 million offering size requirement or the 25% of the company's post-offering Market Value of Listed Securities requirement, and 18 of those companies were cited for a compliance concern. *See id.*

[34] *See id.*

*C. Minimum Market Value of Unrestricted Publicly Held Shares Requirement for a Business Combination*

The Exchange proposes to adopt new Nasdaq Rule 5210(k)(ii) to require a Company that is conducting a business combination, as described in Nasdaq Rule 5110(a) [35] or IM–5101–2,[36] with a Restrictive Market Company to have a minimum Market Value of Unrestricted Publicly Held Shares [37] following the business combination equal to the lesser of (i) $25 million or (ii) 25% of post-business combination entity's Market Value of Listed Securities. A Restrictive Market Company subject to the proposed rule would also need to comply with all other applicable listing requirements.[38]

The Exchange states that it believes that a business combination as described in Nasdaq Rule 5110(a) or IM–5101–2 involving a Restrictive Market Company presents similar risks to U.S. investors as an IPO of a Restrictive Market Company, and therefore, Nasdaq believes it is appropriate to apply similar thresholds to post-business combination entities to ensure that a company listing through a business combination would have satisfied equivalent standards that apply to an IPO.[39] The Exchange further states that it believes that the proposed listing requirement for post-business combination entities would help to provide an additional assurance that there are sufficient freely tradable shares and investor interest to support fair and orderly trading on the Exchange when the target company principally administers its business in a Restrictive Market.[40]

*D. Direct Listings of Restrictive Market Companies*

The Exchange proposes to adopt new Nasdaq Rule 5210(k)(iii) to provide that a Restrictive Market Company that is listing its Primary Equity Security on Nasdaq in connection with a Direct Listing, as defined in Nasdaq Rule IM–5315–1,[41] would be permitted to list on: (i) The Nasdaq Global Select Market, provided that the Company meets all applicable listing requirements for the Nasdaq Global Select Market and the additional requirements of Nasdaq Rule IM–5315–1, or (ii) the Nasdaq Global Market, provided that the Company meets all applicable listing requirements for the Nasdaq Global Market and the additional requirements of Nasdaq Rule IM–5405–1.[42] On the other hand, proposed Nasdaq Rule 5210(k)(iii) would provide that a Restrictive Market Company would not be permitted to list on the Nasdaq Capital Market in connection with a Direct Listing, notwithstanding the fact that the Company may meet the applicable initial listing requirements for the Nasdaq Capital Market and the additional requirements in Nasdaq Rule IM–5505–1.[43]

The Exchange's rules currently set forth initial listing requirements for companies listing on the Nasdaq Global Select Market, Nasdaq Global Market, and Nasdaq Capital Market,[44] and additional listing requirements for Companies conducting a Direct Listing on such markets.[45] The Exchange states that it believes it is appropriate to permit Restrictive Market Companies to list through a Direct Listing on the Nasdaq Global Select Market or Nasdaq Global Market because such companies would be subject to the additional listing requirements set forth in Nasdaq Rule IM–5315–1 or IM–5405–1, respectively.[46] On the other hand, the Exchange states that it does not believe that the additional requirements for Direct Listing on the Nasdaq Capital Market, set forth in Nasdaq Rule IM–5501–1, are sufficient to overcome concerns regarding sufficient liquidity and investor interest to support fair and orderly trading on the Exchange with respect to Restrictive Market Companies.[47]

[35] Nasdaq Rule 5110(a) (Business Combinations with non-Nasdaq Entities Resulting in a Change of Control) sets forth requirements applicable to a Company that engages in a business combination with a non-Nasdaq entity, resulting in a change of control of the Company and potentially allowing the non-Nasdaq entity to obtain a Nasdaq Listing.

[36] Nasdaq Rule IM–5101–2 (Listing of Companies Whose Business Plan is to Complete One or More Acquisitions) sets forth requirements applicable to a Company whose business plan is to complete an IPO and engage in a merger or acquisition with one or more unidentified companies within a specific period of time.

[37] Nasdaq Rule 5005(a)(45) defines ''Unrestricted Publicly Held Shares'' as Publicly Held Shares that are Unrestricted Securities. ''Publicly Held Shares'' means shares not held directly or indirectly by an officer, director or any person who is the beneficial owner of more than 10 percent of the total shares outstanding. *See* Nasdaq Rule 5005(a)(35). ''Unrestricted Securities'' means securities that are not subject to resale restrictions for any reason, including, but not limited to, securities: (i) Acquired directly or indirectly from the issuer or an affiliate of the issuer in unregistered offerings such as private placements or Regulation D offerings; (ii) acquired through an employee stock benefit plan or as compensation for professional services; (iii) acquired in reliance on Regulation S, which cannot be resold within the United States; (iv) subject to a lockup agreement or a similar contractual restriction; or (v) considered ''restricted securities'' under Rule 144. *See* Nasdaq Rules 5005(a)(46) and (37).

[38] The Exchange provides the following examples to illustrate the proposed rule. First, Company A is currently listed on the Nasdaq Capital Market and plans to acquire a company that principally administers its business in a Restrictive Market, in accordance with IM–5101–2. Following the business combination, Company A intends to transfer to the Nasdaq Global Select Market. Company A expects the post-business combination entity to have a Market Value of Listed Securities of $250,000,000. Since 25% of $250,000,000 is $62,500,000, which is higher than $25,000,000, pursuant to the requirements of the proposed rule, to qualify for listing the post-business combination entity must have a minimum Market Value of Unrestricted Publicly Held Shares of at least $25,000,000. The company would also need to comply with the other applicable listing requirements of the Nasdaq Global Select Market, including a Market Value of Unrestricted Publicly Held Shares of at least $45,000,000. *See* Notice, *supra* note 3, at 9552; Nasdaq Rule 5315(f)(2)(C). As another example, Company B is currently listed on Nasdaq Capital Market and plans to combine with a non-Nasdaq entity that principally administers its business in a Restrictive Market, resulting in a change of control as defined in Nasdaq Rule 5110(a), whereby the non-Nasdaq entity will become the Nasdaq-listed company. Following the change of control, Company B expects the listed company to have a Market Value of Listed Securities of $50,000,000. Since 25% of $50,000,000 is $12,500,000, which is lower than $25,000,000, pursuant to the requirements of the proposed rule, the listed company must have a minimum Market Value of Unrestricted Publicly Held Shares following the change of control of at least $12,500,000. The post-business combination company would also need to comply with all other applicable listing requirements of the Nasdaq Capital Market, including a Market Value of Unrestricted Publicly Held Shares of at least $5 million. *See* Notice, *supra* note 3, at 9552; Nasdaq Rule 5505(b)(3)(C).

[39] *See* Notice, *supra* note 3, at 9553. The Exchange states that it found that out of seven business combinations involving Restrictive Market Companies from 2015 through September 30, 2020, five would not have qualified under proposed Nasdaq Rule 5210(k)(ii) to have a minimum Market Value of Unrestricted Publicly Held Shares following the business combination of $25 million or 25% of the post-business combination entity's Market Value of Listed Securities, whichever is lower. The Exchange states that all five of these companies have been cited for a deficiency after the completion of their business combination. On the other hand, Nasdaq states that only one out of the two business combinations involving Restrictive Market Companies that would have qualified under proposed Nasdaq Rule 5210(k)(ii) during such period was cited for a compliance concern. *See id.*

[40] *See id.*

[41] *See supra* note 22.

[42] *See* Notice, *supra* note 3, at 9553.

[43] *See id.*

[44] *See* Nasdaq Rules 5315, 5405, and 5505.

[45] *See* Nasdaq Rules IM–5315–1, IM–5405–1, and IM–5505–1.

[46] *See* Notice, *supra* note 3, at 9553.

[47] *See id.* As an example, the Exchange states that the Nasdaq Global Select Market and Nasdaq Global Market require a company to have at least 1,250,000 and 1.1 million Unrestricted Publicly Held Shares, respectively, and a Market Value of Unrestricted Publicly Held Shares of at least $45 million and $8 million, respectively. *See* Nasdaq Rules 5315(e)(2), 5315(f)(2)(C), 5405(a)(2), and 5405(b)(1)(C). In contrast, the Nasdaq Capital Market only requires a company to have at least 1 million Unrestricted Publicly Held Shares and a Market Value of Unrestricted Publicly Held Shares of at least $5 million. *See* Nasdaq Rules 5505(a)(2) and 5505(b)(3)(C); Notice, *supra* note 3, at 9553, n.34.

## III. Discussion and Commission Findings

The Commission finds that the proposed rule change is consistent with the requirements of the Act and the rules and regulations thereunder applicable to a national securities exchange.[48] In particular, the Commission finds that the proposed rule change is consistent with Section 6(b)(5) of the Act,[49] which requires, among other things, that the rules of a national securities exchange be designed to prevent fraudulent and manipulative acts and practices, to promote just and equitable principles of trade, to remove impediments to and perfect the mechanism of a free and open market and a national market system, and, in general, to protect investors and the public interest, and are not designed to permit unfair discrimination between customers, issuers, brokers, or dealers.

The Exchange has proposed to adopt enhanced initial listing standards for Restrictive Market Companies conducting an IPO or engaged in a business combination in order to help assure the existence of adequate investor base and public float to support fair and orderly trading for securities issued by Restrictive Market Companies that are listing on the Exchange for the first time.[50] In addition, the Exchange has proposed to prohibit Direct Listings on Nasdaq Capital Market of securities issued by Restrictive Market Companies due to concerns regarding liquidity and fair and orderly trading.[51] As stated by the Exchange, listed companies that are based in jurisdictions that do not provide the PCAOB with access to conduct inspections of public accounting firms that audit Nasdaq-listed companies raise concerns regarding the accuracy of disclosures, accountability, and access to information with respect to such companies and present unique potential risks to U.S. investors due to restrictions on the PCAOB's ability to inspect the audit work and practices of auditors in those countries.[52] The Exchange also states that less liquid securities may be more susceptible to price manipulation and that, in particular, the risk of price manipulation due to insider trading is more acute with respect to Restrictive Market Companies, particularly if a company's financial statements contain undetected material misstatements due to error or fraud and the PCAOB is unable to inspect the company's auditor to determine if it complied with PCAOB and Commission rules and professional standards in connection with its performance of audits.[53]

Further, the Exchange states that Nasdaq and investors rely on the work of auditors to provide reasonable assurances that the financial statements provided by a company are free of material misstatements.[54] The Exchange states that the PCAOB's inability to inspect the audit work and practices of auditors in certain countries weakens the assurance that the auditor obtained sufficient appropriate audit evidence to express its opinion on a company's financial statements, and decreases confidence that the auditor complied with PCAOB and Commission rules and professional standards in connection with the auditor's performance of audits.[55] Absent reasonable assurances from an auditor that a company's financial statements and related disclosures are free from material misstatements, the Exchange states that there is a risk that a company that would otherwise not have qualified to list on Nasdaq may satisfy Nasdaq's listing standards by presenting financial statements that contain undetected material misstatements.[56] The Exchange therefore believes that the proposed rule change would provide greater assurances to investors that a company truly meets Nasdaq's financial listing requirements by imposing heightened listing criteria on a Restrictive Market Company, thereby preventing fraudulent and manipulative acts, protecting investors, and promoting the public interest.[57]

The Commission has consistently recognized that the development and enforcement of meaningful listing standards for an exchange is of critical importance to financial markets and the investing public.[58] Among other things, the Commission has stated that listing standards provide the means for an exchange to screen issuers that seek to become listed, and to provide listed status only to those that are bona fide companies that have or will have sufficient public float, investor base, and trading interest likely to generate depth and liquidity sufficient to promote fair and orderly markets.[59] Meaningful listing standards are also important given investor expectations regarding the nature of securities that have achieved an exchange listing, and the role of an exchange in overseeing its market and assuring compliance with its listing standards.[60]

The Commission has also previously stated that when the PCAOB is unable to inspect auditors there is a lack of transparency with respect to the audit quality provided by such firms and that the inability of the PCAOB to inspect auditors of certain registrants could generate uncertainty regarding their financial reporting quality.[61] The Commission has stated that, as a result, there is uncertainty regarding the reliability of the financial information of issuers audited by firms that are not inspected by the PCAOB, which can potentially lead to suboptimal investment decisions by investors.[62] Given these heightened risks identified by the Commission with respect to issuers audited by firms that the PCAOB is unable to inspect, the Commission concludes that the Exchange's proposal to impose heightened listing requirements on companies that principally administer their business in a jurisdiction that does not provide the PCAOB with access to conduct inspections of public accounting firms that audit Nasdaq-listed companies (*i.e.,* Restrictive Market Companies) is consistent with the Act and not

[48] 15 U.S.C. 78f(b). In approving this proposed rule change, the Commission has considered the proposed rule change's impact on efficiency, competition, and capital formation. *See* 15 U.S.C. 78c(f).

[49] 15 U.S.C. 78f(b)(5).

[50] *See supra* notes 32 and 40 and accompanying text.

[51] *See supra* note 47 and accompanying text.

[52] *See supra* notes 10–12 and accompanying text.

[53] *See supra* note 15 and accompanying text.

[54] *See supra* note 8 and accompanying text.

[55] *See* Notice, *supra* note 3, at 9554.

[56] *See id.*

[57] *See id. See also* Nasdaq Response Letter, *supra* note 17, at 3.

[58] *See infra* notes 59–60.

[59] *See, e.g.,* Securities Exchange Act Release Nos. 81856 (October 11, 2017), 82 FR 48296, 48298 (October 17, 2017) (SR–NYSE–2017–31); 81079 (July 5, 2017), 82 FR 32022, 32023 (July 11, 2017) (SR–NYSE–2017–11); 65708 (November 8, 2011), 76 FR 70799, 70802 (November 15, 2011) (''SR–NASDAQ–2011–073 Approval Order''); 63607 (December 23, 2010), 75 FR 82420, 82422 (December 30, 2010) (''SR–NASDAQ–2010–137 Approval Order''); and 57785 (May 6, 2008), 73 FR 27597, 27599 (May 13, 2008) (''SR–NYSE–2008–17 Approval Order''). The Commission has stated that adequate listing standards, by promoting fair and orderly markets, are consistent with Section 6(b)(5) of the Act, in that they are, among other things, designed to prevent fraudulent and manipulative acts and practices, promote just and equitable principles of trade, and protect investors and the public interest. *See, e.g.,* Securities Exchange Act Release Nos. 82627 (February 2, 2018), 83 FR 5650, 5653, n.53 (February 8, 2018) (SR–NYSE–2017–30); 87648 (December 3, 2019), 84 FR 67308, 67314, n.42 (December 9, 2019) (SR–NASDAQ–2019–059); and 88716 (April 21, 2020), 85 FR 23393, 23395, n.22 (April 27, 2020) (SR–NASDAQ–2020–001).

[60] *See, e.g.,* SR–NASDAQ–2011–073 Approval Order, *supra* note 59, 76 FR at 70802; SR–NASDAQ–2010–137 Approval Order, *supra* note 59, 75 FR at 82422; and SR–NYSE–2008–17 Approval Order, *supra* note 59, 73 FR at 27599.

[61] *See Holding Foreign Companies Accountable Act Disclosure,* Securities Exchange Act Release No. 91364 (March 18, 2021), 86 FR 17528 (April 5, 2021), at 17534, 17537.

[62] *See id.* at 17534–35.

designed to permit unfair discrimination. Furthermore, the Commission believes that the objective criteria proposed by the Exchange for determining whether a company's business is principally administered in a Restrictive Market[63] should help to ensure that the Exchange applies the heightened listing standards to companies in a manner that is not designed to permit unfair discrimination consistent with Section 6(b)(5) of the Act.

With respect to the proposed heightened initial listing standards, the Commission believes that the proposed requirements should allow the Exchange to more accurately determine whether a Restrictive Market Company conducting an IPO or a post-business combination entity involving a Restrictive Market Company does not have adequate distribution and liquidity and is thus not suitable for listing and trading on the Exchange. The Exchange has provided data showing that it has observed that Restrictive Market Companies listing on Nasdaq in connection with an IPO and post-business combination entities involving Restrictive Market Companies that did not meet the proposed listing requirements have more non-compliance issues than similar companies that would have met the proposed listing requirements.[64] The Commission has previously stated that a Firm Commitment Offering is designed to promote appropriate price discovery and assists in creating a liquid market.[65] In addition, the Commission believes that having a minimum Market Value of Unrestricted Publicly Held Shares requirement should allow an exchange to more accurately determine whether a security does not have adequate distribution and liquidity, and should therefore help to ensure that an exchange does not list securities that do not have a sufficient market, with adequate depth and liquidity, and without sufficient investor interest to support an exchange listing.[66] Thus, the Commission concludes that the proposals to require (i) a Restrictive Market Company conducting an IPO to offer a minimum amount of securities in the U.S. to Public Holders in a Firm Commitment Offering and (ii) a company conducting a business combination, as described in Nasdaq Rule 5110(a) or IM–5101–2, with a Restrictive Market Company, to have a minimum Market Value of Unrestricted Publicly Held Shares following the business combination, and the proposed thresholds for such requirements, are consistent with the requirements of Section 6(b)(5) of the Act that the rules of the exchange be designed to prevent fraudulent and manipulative acts and practices, promote just and equitable principles of trade, and protect investors and the public interest, and not be designed to permit unfair discrimination.

One commenter states that the proposal is insufficient to address the risk that a company may satisfy Nasdaq's listing standards by presenting financial statements that contain undetected material misstatements and that the proposed rules should include provisions that would prohibit Restrictive Market Companies, including companies listed prior to the effectiveness of the proposal, from engaging an auditor or an accounting firm that is located in a jurisdiction that limits the PCAOB's ability to inspect the auditor to assist with the company audit.[67] In addition, this commenter expresses concerns raised by academics regarding the vulnerability of U.S. investors to ''low-ball 'take private' transactions'' in Restricted Market Companies, where ''[t]he goal is to delist U.S. shares at a depressed buyout price and then relist in [a Restricted Market] at a much loftier valuation.'' [68] This commenter states that Nasdaq should promptly limit the U.S. investor exposure to potentially unfair take-private transactions by adopting provisions to prevent the initial listing of Restrictive Market Companies.[69] In response, the Exchange states that, while the commenter may prefer a different proposal, the commenter's suggested proposal is not the Exchange's proposal that is currently before the Commission.[70] The Exchange states that, instead, to address the concerns Nasdaq has observed arising from the unique potential risks to U.S. investors due to restrictions on the PCAOB's ability to inspect the audit work and practices of auditors in Restrictive Markets, Nasdaq has proposed heightened liquidity requirements designed to ensure that Restrictive Market Companies have sufficient investor base and public float to support fair and orderly trading on the Exchange, which Nasdaq believes, as structured, are consistent with Section 6(b)(5) of the Act.[71]

The proposed provisions suggested by the commenter are not part of Nasdaq's proposal, and the Commission must approve the proposal if it finds that the proposal is consistent with the Act and rules thereunder. The Commission believes the Exchange's proposal is reasonably designed to help address compliance concerns regarding securities of Restrictive Market Companies and to help ensure fair and orderly trading when such companies list on Nasdaq.

The Commission concludes that it is consistent with the Act to prohibit Restrictive Market Companies from listing on the Nasdaq Capital Market in connection with a Direct Listing. In support of its proposal, the Exchange states that it does not believe the listing requirements for Direct Listings on the Nasdaq Capital Market set forth in Nasdaq's rules are sufficient to overcome the risks that Restrictive Market Companies present with respect to liquidity.[72] Given the heightened concerns enumerated by the Commission regarding companies that cannot be inspected by the PCAOB,[73] the Commission believes that the proposal to prohibit Restrictive Market Companies from listing on the Nasdaq Capital Market in connection with a Direct Listing is consistent with the requirements of Section 6(b)(5) of the Act that the rules of the exchange be designed to prevent fraudulent and manipulative acts and practices, promote just and equitable principles of trade, and protect investors and the public interest, and not be designed to permit unfair discrimination.

In sum, the Commission concludes that the proposed new initial listing requirements for Restrictive Market Companies, including the prohibition on Direct Listings on Nasdaq Capital Market, will help maintain fair and orderly markets and are designed to protect investors and the public interest, and are not designed to permit unfair

[63] *See supra* note 25 and accompanying text.

[64] *See supra* notes 33 and 39 and accompanying text.

[65] *See also* Securities Exchange Act Release No. 86314 (July 5, 2019), 84 FR 33102 (July 11 2019) (SR–NASDAQ–2019–009) (Order Approving Revisions to Nasdaq's Initial Listing Standards Related to Liquidity), at 33112.

[66] *See id.* at 33111.

[67] *See* Letter from Jeffrey P. Mahoney, General Counsel, Council of Institutional Investors (February 18, 2021) (''CII Letter I''), at 4–5; Letter from Jeffrey P. Mahoney, General Counsel, Council of Institutional Investors (May 27, 2021) (''CII Letter II''), at 1–4.

[68] *See* CII Letter II, *supra* note 67, at 3 (citing Jesse Fried & Matthew J. Schoenfeld, Delisting Chinese Firms: A Cure Likely Worse than the Disease, Harv. L. Sch. F. On Corp. Governance (June 9, 2020), *https://corpgov.law.harvard.edu/2020/06/09/delisting-chinese-firms-a-cure-likely-worse-than-the-disease/*).

[69] *See id.* at 3–4.

[70] *See* Nasdaq Response Letter, *supra* note 17, at 3.

[71] *See id.*

[72] *See supra* note 47 and accompanying text. *See also* Nasdaq Rules 5505 and IM–5505–1.

[73] *See supra* notes 61–62 and accompanying text.

discrimination given the risks that Restricted Market Companies present, and should help the Exchange in determining whether a Restricted Market Company will not have a sufficient market, with adequate depth and liquidity, and sufficient investor interest to support listing on the Exchange. A Restrictive Market Company subject to the proposed initial listing requirements for an IPO or business combination would also need to comply with all other applicable listing requirements for the market tier on which it is listing.[74]

Based on the foregoing, the Commission finds that the proposed rule change is consistent with the Act.

## VII. Conclusion

*It is therefore ordered*, pursuant to Section 19(b)(2) of the Act,[75] that the proposed rule change (SR–NASDAQ–2021–007) be, and hereby is, approved.

For the Commission, by the Division of Trading and Markets, pursuant to delegated authority.[76]

**J. Matthew DeLesDernier,**

*Assistant Secretary.*

[FR Doc. 2021–21988 Filed 10–7–21; 8:45 am]

**BILLING CODE 8011–01–P**

[74] *See* Nasdaq Rule 5000 Series.

[75] 15 U.S.C. 78s(b)(2).

[76] 17 CFR 200.30–3(a)(12).

## SMALL BUSINESS ADMINISTRATION

**[Disaster Declaration #17039 and #17040; MICHIGAN Disaster Number MI–00099]**

### Presidential Declaration Amendment of a Major Disaster for the State of Michigan

**AGENCY:** U.S. Small Business Administration.

**ACTION:** Amendment 3.

**SUMMARY:** This is an amendment of the Presidential declaration of a major disaster for the State of Michigan (FEMA–4607–DR), dated 07/15/2021.

*Incident:* Severe Storms, Flooding, and Tornadoes.

*Incident Period:* 06/25/2021 through 06/26/2021.

**DATES:** Issued on 09/29/2021.

*Physical Loan Application Deadline Date:* 11/12/2021.

*Economic Injury (EIDL) Loan Application Deadline Date:* 04/15/2022.

**ADDRESSES:** Submit completed loan applications to: U.S. Small Business Administration, Processing and Disbursement Center, 14925 Kingsport Road, Fort Worth, TX 76155.

**FOR FURTHER INFORMATION CONTACT:** A. Escobar, Office of Disaster Assistance, U.S. Small Business Administration, 409 3rd Street SW, Suite 6050, Washington, DC 20416, (202) 205–6734.

**SUPPLEMENTARY INFORMATION:** The notice of the President's major disaster declaration for the State of Michigan, dated 07/15/2021, is hereby amended to extend the deadline for filing applications for physical damages as a result of this disaster to 11/12/2021.

All other information in the original declaration remains unchanged.

(Catalog of Federal Domestic Assistance Number 59008)

**James Rivera,**

*Associate Administrator for Disaster Assistance.*

[FR Doc. 2021–22047 Filed 10–7–21; 8:45 am]

**BILLING CODE 8026–03–P**

## DEPARTMENT OF STATE

**[Public Notice 11559]**

### Notice of Determinations; Culturally Significant Objects Being Imported for Conservation, Scientific Research, and Display in Three Exhibitions—Nine Medieval Devotional Objects

**SUMMARY:** Notice is hereby given of the following determinations: I hereby determine that certain objects being imported from abroad pursuant to an agreement with their foreign owner or custodian for temporary conservation, scientific research, and exhibition or display in the exhibitions ''Transcending Time,'' ''Mary,'' and ''Passion for Collecting'' at the J. Paul Getty Museum at the Getty Center, Los Angeles, California, and at possible additional exhibitions or venues yet to be determined, are of cultural significance, and, further, that their temporary conservation, scientific research, and exhibition or display within the United States as aforementioned is in the national interest. I have ordered that Public Notice of these determinations be published in the **Federal Register**.

**FOR FURTHER INFORMATION CONTACT:** Chi D. Tran, Program Administrator, Office of the Legal Adviser, U.S. Department of State (telephone: 202–632–6471; email: *section2459@state.gov*). The mailing address is U.S. Department of State, L/PD, 2200 C Street NW (SA–5), Suite 5H03, Washington, DC 20522–0505.

**SUPPLEMENTARY INFORMATION:** The foregoing determinations were made pursuant to the authority vested in me by the Act of October 19, 1965 (79 Stat. 985; 22 U.S.C. 2459), E.O. 12047 of March 27, 1978, the Foreign Affairs Reform and Restructuring Act of 1998 (112 Stat. 2681, *et seq.;* 22 U.S.C. 6501 note, *et seq.*), Delegation of Authority No. 234 of October 1, 1999, and Delegation of Authority No. 236–3 of August 28, 2000.

**Matthew R. Lussenhop,**

*Acting Assistant Secretary, Bureau of Educational and Cultural Affairs, Department of State.*

[FR Doc. 2021–21974 Filed 10–7–21; 8:45 am]

**BILLING CODE 4710–05–P**

## DEPARTMENT OF STATE

**[Public Notice 11557]**

### Notice of Determinations; Culturally Significant Objects Being Imported for Exhibition—Determinations: ''Hall of Ancient Egypt'' Exhibition

**SUMMARY:** Notice is hereby given of the following determinations: I hereby determine that certain objects being imported from abroad pursuant to agreements with their foreign owner or custodian for temporary display in the exhibition ''Hall of Ancient Egypt'' at the Houston Museum of Natural Science, Houston, Texas, and at possible additional exhibitions or venues yet to be determined, are of cultural significance, and, further, that their temporary exhibition or display within the United States as aforementioned is in the national interest. I have ordered that Public Notice of these determinations be published in the **Federal Register**.

**FOR FURTHER INFORMATION CONTACT:** Chi D. Tran, Program Administrator, Office of the Legal Adviser, U.S. Department of State (telephone: 202–632–6471; email: *section2459@state.gov*). The mailing address is U.S. Department of State, L/PD, 2200 C Street NW (SA–5), Suite 5H03, Washington, DC 20522–0505.

**SUPPLEMENTARY INFORMATION:** The foregoing determinations were made pursuant to the authority vested in me by the Act of October 19, 1965 (79 Stat. 985; 22 U.S.C. 2459), E.O. 12047 of March 27, 1978, the Foreign Affairs Reform and Restructuring Act of 1998 (112 Stat. 2681, *et seq.;* 22 U.S.C. 6501 note, *et seq.*), Delegation of Authority No. 234 of October 1, 1999, and Delegation of Authority No. 236–3 of August 28, 2000.

**Matthew R. Lussenhop,**

*Acting Assistant Secretary, Bureau of Educational and Cultural Affairs, Department of State.*

[FR Doc. 2021–21973 Filed 10–7–21; 8:45 am]

**BILLING CODE 4710–05–P**

## DEPARTMENT OF STATE

**[Public Notice 11558]**

### Notice of Determinations; Culturally Significant Objects Being Imported for Exhibition—Determinations: ''Through Vincent's Eyes: Van Gogh and His Sources'' Exhibition

**SUMMARY:** Notice is hereby given of the following determinations: I hereby determine that certain objects being imported from abroad pursuant to agreements with their foreign owner or custodian for temporary display in the exhibition ''Through Vincent's Eyes: Van Gogh and His Sources'' at the Columbus Museum of Art, Columbus, Ohio; the Santa Barbara Museum of Art, Santa Barbara, California; and at possible additional exhibitions or venues yet to be determined, are of cultural significance, and, further, that their temporary exhibition or display within the United States as aforementioned is in the national interest. I have ordered that Public Notice of these determinations be published in the **Federal Register**.

**FOR FURTHER INFORMATION CONTACT:** Chi D. Tran, Program Administrator, Office of the Legal Adviser, U.S. Department of State (telephone: 202–632–6471; email: *section2459@state.gov*). The mailing address is U.S. Department of State, L/PD, 2200 C Street NW (SA–5), Suite 5H03, Washington, DC 20522–0505.

**SUPPLEMENTARY INFORMATION:** The foregoing determinations were made pursuant to the authority vested in me by the Act of October 19, 1965 (79 Stat. 985; 22 U.S.C. 2459), E.O. 12047 of March 27, 1978, the Foreign Affairs Reform and Restructuring Act of 1998 (112 Stat. 2681, *et seq.;* 22 U.S.C. 6501 note, *et seq.*), Delegation of Authority No. 234 of October 1, 1999, and Delegation of Authority No. 236–3 of August 28, 2000.

**Matthew R. Lussenhop,**

*Acting Assistant Secretary, Bureau of Educational and Cultural Affairs, Department of State.*

[FR Doc. 2021–21972 Filed 10–7–21; 8:45 am]

**BILLING CODE 4710–05–P**

## SURFACE TRANSPORTATION BOARD

**[Docket No. FD 36538]**

### The Central Railroad Company of Indiana—Acquisition and Operation Exemption—Patton-Lowe RR, Inc.

The Central Railroad Company of Indiana (CIND), a Class III railroad, has filed a verified notice of exemption under 49 CFR 1150.41 to enter into a transaction agreement (Transaction Agreement) with Patton-Lowe RR, Inc. (PLRI), for CIND to acquire and operate a rail line from approximately milepost 64.43 at Craig [1] (east of the SR46 Grade Crossing, at a point of connection with CIND's Westport Industrial Track near CIND milepost 225.0) to 100 feet east of the switch at approximately milepost 64.61 (the Line).[2] The verified notice states that CIND has also entered into a trackage rights agreement to acquire incidental trackage rights over a connecting PLRI rail line, which will allow CIND to provide local and overhead service to customers.[3]

CIND certifies that neither the Transaction Agreement and nor the trackage rights agreement impose or include an interchange commitment. CIND further certifies that its projected revenues as a result of the transaction will not exceed those that would qualify it as a Class III rail carrier but that its current annual revenues exceed $5 million. Pursuant to 49 CFR 1150.42(e), if a carrier's projected annual revenues will exceed $5 million, it must, at least 60 days before the exemption becomes effective, post a notice of its intent to undertake the proposed transaction at the workplace of the employees on the affected lines, serve a copy of the notice on the national offices of the labor unions with employees on the affected lines, and certify to the Board that it has done so. However, CIND's verified notice includes a request for waiver of the 60-day advance labor notice requirements. CIND's waiver request will be addressed in a separate decision. The Board will establish the effective date of the exemption in its separate decision on the waiver request.

If the verified notice contains false or misleading information, the exemption is void ab initio. Petitions to revoke the exemption under 49 U.S.C. 10502(d) may be filed at any time. The filing of a petition to revoke will not automatically stay the effectiveness of the exemption. Petitions for stay must be filed no later than October 15, 2021.

All pleadings, referring to Docket No. FD 36538, should be filed with the Surface Transportation Board via e-filing on the Board's website. In addition, one copy of each pleading must be served on CIND's representative, Eric M. Hocky, Clark Hill PLC, Two Commerce Square, 2001 Market Street, Suite 2620, Philadelphia, PA 19103.

According to CIND, this action is categorically excluded from environmental review under 49 CFR 1105.6(c) and from historic reporting requirements under 49 CFR 1105.8(b).

Board decisions and notices are available at *www.stb.gov.*

Decided: October 5, 2021.

By the Board, Valerie O. Quinn, Acting Director, Office of Proceedings.

**Kenyatta Clay,**

*Clearance Clerk.*

[FR Doc. 2021–22024 Filed 10–7–21; 8:45 am]

**BILLING CODE 4915–01–P**

[1] Craig is an unincorporated railroad location immediately west of the boundary of the City of Greensburg, Ind. *See Patton-Lowe RR—Acquis. Exemption—Consolidated Rail Corp.,* FD 36366, slip op. at 1 n.1 (STB served Jan. 3, 2020).

[2] The parties to the Transaction Agreement also include Lowe's Pellets and Grain, Inc. (Lowe's), the parent company of PLRI, and Next Generation, Inc. (NEXTGEN).

[3] The Transaction Agreement also provides for the rehabilitation of certain track to allow CIND to access the incidental track and the Lowe's and NEXTGEN facilities.

## OFFICE OF THE UNITED STATES TRADE REPRESENTATIVE

### Request for Comments on the Possible Reinstatement of Certain Exclusions in the Section 301 Investigation of China's Acts, Policies, and Practices Related to Technology Transfer, Intellectual Property, and Innovation

**AGENCY:** Office of the United States Trade Representative (USTR).

**ACTION:** Notice and request for comments.

**SUMMARY:** In prior notices, the U.S. Trade Representative modified the action in the Section 301 investigation of China's acts, policies, and practices related to technology transfer, intellectual property, and innovation by excluding certain products from additional duties in multiple tranches. From the various tranches of granted exclusions, the U.S. Trade Representative subsequently extended 549 exclusions. Most of these extensions expired by December 31, 2020. The remainder expired earlier this year. USTR invites specific comments on whether to reinstate particular product exclusions.

**DATES:** October 12, 2021 at 12:01 a.m. EDT: The public docket on the web portal at *https://comments.USTR.gov* will open for parties to submit comments on the possible reinstatement of particular exclusions. December 1, 2021 at 11:59 p.m. EST: To be assured of consideration, submit written comments on the public docket by this date.

**ADDRESSES:** You must submit all comments through the online portal: *https://comments.USTR.gov.*

**FOR FURTHER INFORMATION CONTACT:** For general questions about this notice and request for comments, contact Associate General Counsel Philip Butler or Assistant General Counsel David Salkeld at (202) 395–5725.

**SUPPLEMENTARY INFORMATION:**

## A. Background

In the course of this investigation the U.S. Trade Representative imposed additional duties on products of China in four tranches. *See* 83 FR 28719 (June 20, 2018); 83 FR 40823 (August 16, 2018); 83 FR 47974 (September 21, 2018), as modified by 83 FR 49153 (September 28, 2018); and 84 FR 43304 (August 20, 2019), as modified by 84 FR 69447 (December 18, 2019); and 85 FR 3741 (January 22, 2020). Each tranche is commonly known as a 'List', *e.g.,* List 1, List 2, etc. The fourth tranche is contained in Lists 4A and 4B. No tariffs on List 4B currently are in effect.

For each tranche, the U.S. Trade Representative established a process by which U.S. stakeholders could request the exclusion of particular products subject to the action. The first tranche of exclusions expired in December 2019 and the final tranche of exclusions expired in October 2020. Starting in November 2019, the U.S. Trade Representative established processes for submitting public comments on whether to extend particular exclusions. *See, e.g.,* 85 FR 6687 (February 5, 2019) and 85 FR 38482 (June 26, 2020). Pursuant to these processes, the U.S. Trade Representative determined to extend 137 exclusions covered under List 1,[1] 59 exclusions on List 2,[2] 266 exclusions on List 3,[3] and 87 exclusions on List 4.[4] With the exception of exclusions related to the COVID pandemic, all of these 549 exclusions have expired. In particular, the exclusions for most of these products expired by December 31, 2020, and the remaining exclusions expired on March 25, and April 18, 2021. *See* 85 FR 15849 and 85 FR 20332. USTR is separately addressing the possible extension of current COVID exclusions. *See* 86 FR 48280 and 86 FR 54011.

[1] *List 1 Notices:* 84 FR 70616 (December 23, 2019); 85 FR 15849 (March 19, 2020); 85 FR 20332 (April 10, 2020); 85 FR 29503 (May15, 2020); 85 FR 33775 (June 2, 2020); 85 FR 41267 (July 9,2020); 85 FR 59587 (September 22, 2020); 85 FR 62782 (October 5, 2020).

[2] *List 2 Notices:* 85 FR 45949 (July 30, 2020); 85 FR 59595 (September 22, 2020); 85 FR 62786 (October 5, 2020).

[3] *List 3 Notices:* 85 FR 48600 (August 11, 2020); 85 FR 57925 (September 16, 2020); 85 FR 63332 (October 7, 2020).

[4] *List 4a Notices:* 85 FR 54616 (September 2, 2020); 85 FR 63330 (October 7, 2020).

## B. Possible Reinstatement of Previously Extended Product Exclusions

The U.S. Trade Representative is considering the possible reinstatement of previously extended exclusions granted under the notices referenced in notes 1–4 above. Accordingly, USTR invites public comments on whether to reinstate particular exclusions that previously were extended. Additionally, USTR invites public comments on the appropriate length of the reinstated exclusions.

USTR will evaluate the possible reinstatement of each exclusion on a case-by-case basis. The focus of the evaluation will be whether, despite the imposition of additional duties beginning in September 2018, the particular product remains available only from China. In addressing this factor, commenters should address specifically:

- Whether the particular product and/or a comparable product is available from sources in the United States and/or in third countries.
- Any changes in the global supply chain since September 2018 with respect to the particular product or any other relevant industry developments.
- The efforts, if any, the importers or U.S. purchasers have undertaken since September 2018 to source the product from the United States or third countries.
- Domestic capacity for producing the product in the United States.

In addition, USTR will consider whether or not reinstating the exclusion will impact or result in severe economic harm to the commenter or other U.S. interests, including the impact on small businesses, employment, manufacturing output, and critical supply chains in the United States, as well as the overall impact of the exclusions on the goal of obtaining the elimination of China's acts, policies, and practices covered in the Section 301 investigation.

USTR will seek advice and consult with the agencies that make up the interagency Section 301 Committee, including the Small Business Administration.

Exclusions reinstated pursuant to this review would be retroactive with respect to merchandise entered, or withdrawn from warehouse, for consumption on or after the opening of the docket on October 12, 2021, for which the entries are not liquidated at the time the claim to apply the reinstated exclusion is made to U.S. Customs and Border Protection in accordance with their procedures.

## C. How To Comment on the Reinstatement of Exclusions

The 549 previously-extended product exclusions can be found in the notices cited in notes 1–4 above. For ease of reference, USTR also is publishing a list of the previously extended exclusions on its website at: *https://ustr.gov/issue-areas/enforcement/section-301-investigations/section-301-china-technology-transfer/china-section-301-tariff-actions-and-exclusion-process/reinstatement-certain-exclusions-previously-extended.*

To submit a comment either supporting or opposing the reinstatement of a particular exclusion, commenters first must register on the portal at *https://comments.USTR.gov.* As noted above, the public docket on the portal will be open for 50 days, starting October 12, 2021. After registration, the commenter may submit an exclusion reinstatement comment to the public docket.

A facsimile of the form containing the questions to be addressed on the comment docket is available on USTR's website at *https://ustr.gov/issue-areas/enforcement/section-301-investigations/section-301-china-technology-transfer/china-section-301-tariff-actions-and-exclusion-process/reinstatement-certain-exclusions-previously-extended.* Set out below is a summary of the information to be submitted.

- Contact information, including the full legal name of the organization making the comment, and whether the commenter is a third party.
- The previously extended exclusion you are commenting on.
- Whether the product or products covered by the exclusion are subject to an antidumping or countervailing duty order issued by the U.S. Department of Commerce.
- Whether you support or oppose reinstating the exclusion and an explanation of your rationale.
- Whether the commenter meets the size standard for a small business, as established by the Small Business Administration.
- The number of employees your business employs in the United States.
- Whether the products covered by the exclusion or comparable products are available from sources in the U.S. or in third countries.
- The efforts you have undertaken since September 2018 to source the product from the U.S. or third countries.
- As a domestic producer, your capacity to produce the product in the United States, your production in the United States, your efforts to produce domestically, and any constraints.

• The value and quantity of the Chinese-origin product covered by the specific exclusion request purchased over the last three years.

• Whether Chinese suppliers have lowered their prices for products covered by the exclusion following the imposition of duties.

• The value and quantity of the product covered by the exclusion purchased from domestic and third country sources over the last three years.

• If applicable, the commenter's gross revenues for the last three years.

• Whether the Chinese-origin product of concern is sold as a final product or as an input.

• Whether or not reinstating the exclusion will result in severe economic harm to the commenter or other U.S. interests.

• Whether the additional tariffs had an impact on employment at your company.

• Any additional information in support of or in opposition to reinstating the exclusion.

Commenters also may provide any other information or data that they consider relevant.

**D. Submission Instructions**

To be assured of consideration, you must submit your comment during the 50-day period following the opening of the public docket on the portal. Parties seeking to comment on more than one exclusion must submit a separate comment for each exclusion. USTR's portal allows for the submission of Business Confidential Information (BCI). Fields with a (BCI) notation are for BCI and the information entered will not be publicly available. By submitting a comment, the commenter certifies that the information provided is complete and correct to the best of their knowledge.

**Greta Peisch,**

*General Counsel, Office of the United States Trade Representative.*

[FR Doc. 2021–22062 Filed 10–7–21; 8:45 am]

BILLING CODE 3390–F2–P

## DEPARTMENT OF TRANSPORTATION

### Federal Highway Administration

### Notice of Final Federal Agency Actions on Proposed Transportation Project in Florida

**AGENCY:** Federal Highway Administration (FHWA), DOT.

**ACTION:** Notice of limitation on claims for judicial review.

**SUMMARY:** The FHWA, on behalf of the FDOT, is issuing this notice to announce actions taken by FDOT and other Federal Agencies that are final agency actions. These actions relate to the proposed State Road 30 (US 98) Dupont Bridge Replacement Project in Bay County, Florida. These actions grant licenses, permits, or approvals for the project.

**DATES:** By this notice, the FHWA, on behalf of FDOT, is advising the public of final agency actions subject to 23 U.S.C. 139(l)(1). A claim seeking judicial review of the Federal Agency actions on the listed highway project will be barred unless the claim is filed on or before March 7, 2022. If the Federal law that authorizes judicial review of a claim provides a time period of less than 150 days for filing such claim, then that shorter time period still applies.

**FOR FURTHER INFORMATION CONTACT:** For FDOT: Jennifer Marshall, P.E., Director, Office of Environmental Management, FDOT, 605 Suwannee Street, MS 37, Tallahassee, Florida 32399; telephone (863) 519–2239; email: *Jennifer.Marshall@dot.state.fl.us.* The FDOT Office of Environmental Management's normal business hours are 8:00 a.m. to 5:00 p.m. (Eastern Standard Time), Monday through Friday, except State holidays.

**SUPPLEMENTARY INFORMATION:** Effective December 14, 2016, the FHWA assigned, and the FDOT assumed, environmental responsibilities for this project pursuant to 23 U.S.C. 327. Notice is hereby given that FDOT and other Federal Agencies have taken final agency actions subject to 23 U.S.C. 139 (l)(1) by issuing licenses, permits, or approvals for the proposed improvement highway project. The actions by FDOT and other Federal Agencies on the project, and the laws under which such actions were taken are described in the Environmental Assessment approved on August 5, 2021, Finding of No Significant Impacts approved on August 5, 2021, and in other project records for the listed project. The Environmental Assessment, Finding of No Significant Impacts, and other documents for the listed project are available by contacting FDOT at the address provided above. The Environmental Assessment, Finding of No Significant Impacts, and additional project documents can be viewed and downloaded from the project website at: *www.dupontbridge.com.* The project subject to this notice is:

*Project Location:* City of Parker in Bay County, Florida. The project replaces the Dupont Bridge and upgrades the roadway approaches on US 98 from south of the Bonita Bay Outdoor Recreation Center to Oak Shore Drive, a distance of approximately one mile.

*Project Actions:* This notice applies to the Environmental Assessment, Finding of No Significant Impacts and all laws under which such actions were taken, including but not limited to:

1. *General:* National Environmental Policy Act (NEPA) [42 U.S.C. 4321 *et seq.*]; Federal-Aid Highway Act (FAHA) [23 U.S.C. 109 and 23 U.S.C. 128]; 23 CFR part 771.

2. *Air:* Clean Air Act (CAA) [42 U.S.C. 7401–7671(q)], with the exception of project level conformity determinations [42 U.S.C. 7506].

3. *Noise:* Noise Control Act of 1972 [42 U.S.C. 4901–4918]; 23 CFR 772.

4. *Land:* Section 4(f) of the Department of Transportation Act of 1966 [23 U.S.C. 138 and 49 U.S.C. 303]; 23 CFR part 774; Land and Water Conservation Fund (LWCF) [54 U.S.C. 200302–200310].

5. *Wildlife:* Endangered Species Act (ESA) [16 U.S.C. 1531–1544 and 1536]; Marine Mammal Protection Act [16 U.S.C. 1361–1423h], Anadromous Fish Conservation Act [16 U.S.C. 757(a)–757(f)]; Fish and Wildlife Coordination Act [16 U.S.C. 661–667(d)]; Migratory Bird Treaty Act (MBTA) [16 U.S.C. 703–712]; Magnuson-Stevenson Fishery Conservation and Management Act of 1976, as amended [16 U.S.C. 1801–1891d], with Essential Fish Habitat requirements [16 U.S.C. 1855(b)(2)].

6. *Historic and Cultural Resources:* Section 106 of the National Historic Preservation Act of 1966, as amended [54 U.S.C. 3006101 *et seq.*]; Archaeological Resources Protection Act of 1979 (ARPA) [16 U.S.C. 470(aa)–470(II)]; Preservation of Historical and Archaeological Data [54 U.S.C. 312501–312508]; Native American Grave Protection and Repatriation Act (NAGPRA) [25 U.S.C. 3001–3013; 18 U.S.C. 1170].

7. *Social and Economic:* Civil Rights Act of 1964 [42 U.S.C. 2000d–2000d–1]; American Indian Religious Freedom Act [42 U.S.C. 1996]; Farmland Protection Policy Act (FPPA) [7 U.S.C. 4201–4209].

8. *Wetlands and Water Resources:* Clean Water Act (Section 319, Section 401, Section 404) [33 U.S.C. 1251–1387]; Coastal Barriers Resources Act (CBRA) [16 U.S.C. 3501–3510]; Coastal Zone Management Act (CZMA) [16 U.S.C. 1451–1466]; Safe Drinking Water Act (SDWA) [42 U.S.C. 300f–300j–26]; Rivers and Harbors Act of 1899 [33 U.S.C. 401–406]; Wild and Scenic Rivers Act [16 U.S.C. 1271–1287]; Emergency Wetlands Resources Act [16 U.S.C. 3921, 3931]; Wetlands Mitigation, [23 U.S.C. 119(g) and

133(b)(3)]; Flood Disaster Protection Act [42 U.S.C. 4001–4130].

9. *Hazardous Materials:* Comprehensive Environmental Response, Compensation, and Liability Act (CERCLA) [42 U.S.C. 9601–9675]; Superfund Amendments and Reauthorization Act of 1986 (SARA); Resource Conservation and Recovery Act (RCRA) [42 U.S.C. 6901–6992(k)].

10. *Executive Orders:* E.O. 11990 Protection of Wetlands; E.O. 11988 Floodplain Management; E.O. 12898, Federal Actions to Address Environmental Justice in Minority Populations and Low Income Populations; E.O. 11593 Protection and Enhancement of Cultural Resources; E.O. 13007 Indian Sacred Sites; E.O. 13287 Preserve America; E.O. 11514 Protection and Enhancement of Environmental Quality; E.O. 13112 Invasive Species.

(Catalog of Federal Domestic Assistance Program Number 20.205, Highway Planning and Construction. The regulations implementing Executive Order 12372 regarding intergovernmental consultation on Federal programs and activities apply to this program.)

(Authority: 23 U.S.C. 139(l)(1)).

Issued on: September 15, 2021.

**Karen M. Brunelle,**

*Director, Office of Project Development, Federal Highway Administration, Tallahassee, Florida.*

[FR Doc. 2021–21087 Filed 10–7–21; 8:45 am]

**BILLING CODE 4910–RY–P**

## DEPARTMENT OF TRANSPORTATION

### Federal Highway Administration

### Notice of Final Federal Agency Actions on Proposed Transportation Project in Florida

**AGENCY:** Federal Highway Administration (FHWA), DOT.

**ACTION:** Notice of limitation on claims for judicial review.

**SUMMARY:** The FHWA, on behalf of the FDOT, is issuing this notice to announce actions taken by FDOT and other Federal Agencies that are final agency actions. These actions relate to the proposed SW 10th Street Connector Project Development and Environment (PD&E) Study (Financial Management Number 439891–1–22–02). The project includes dual facilities within the existing SW 10th Street right-of-way: A limited access, high-speed connection (Connector Lanes) from Sawgrass Expressway to I–95, and local SW 10th Street. Access points to and from the Connector Lanes from SW 10th Street, just east of Military Trail, are also included in the project. These actions grant licenses, permits, or approvals for the project.

**DATES:** By this notice, the FHWA, on behalf of FDOT, is advising the public of final agency actions subject to 23 U.S.C. 139(l)(1). A claim seeking judicial review of the Federal Agency actions on the listed highway project will be barred unless the claim is filed on or before March 7, 2022. If the Federal law that authorizes judicial review of a claim provides a time period of less than 150 days for filing such claim, then that shorter time period still applies.

**FOR FURTHER INFORMATION CONTACT:** For FDOT: Jennifer Marshall, P.E., Director, Office of Environmental Management, FDOT, 605 Suwannee Street, MS 37, Tallahassee, Florida 32399; telephone (850) 414–4316; email: *Jennifer.Marshall@dot.state.fl.us.* The FDOT Office of Environmental Management's normal business hours are 8:00 a.m. to 5:00 p.m. (Eastern Standard Time), Monday through Friday, except State holidays.

**SUPPLEMENTARY INFORMATION:** Effective December 14, 2016, the FHWA assigned, and the FDOT assumed, environmental responsibilities for this project pursuant to 23 U.S.C. 327. Notice is hereby given that FDOT and other Federal Agencies have taken final agency actions subject to 23 U.S.C. 139(l)(1) by issuing licenses, permits, or approvals for the proposed improvement highway project. The actions by FDOT and other Federal Agencies on the project, and the laws under which such actions were taken are described in the Type 2 Categorical Exclusion approved on June 21, 2021 and in other project records for the listed project. The Type 2 Categorical Exclusion and other documents for the listed project are available by contacting FDOT at the address provided above. The Type 2 Categorical Exclusion and additional project documents can be viewed and downloaded from the project website at: *www.sw10street.com.*

The project subject to this notice is:

*Project Location:* Broward County, Florida, SW 10th Street Connector PD&E Study in the City of Deerfield Beach. The project improves SW 10th Street from Sawgrass Expressway to west of I–95, a distance of approximately three miles.

*Project Actions:* This notice applies to the Type 2 Categorical Exclusion, and all other Federal Agency licenses, permits, or approvals for the listed project as of the issuance date of this notice and all laws under which such actions were taken, including but not limited to:

1. *General:* National Environmental Policy Act (NEPA) [42 U.S.C. 4321 *et seq.*]; Federal-Aid Highway Act (FAHA) [23 U.S.C. 109 and 23 U.S.C. 128]; 23 CFR part 771.

2. *Air:* Clean Air Act (CAA) [42 U.S.C. 7401–7671(q)], with the exception of project level conformity determinations [42 U.S.C. 7506].

3. *Noise:* Noise Control Act of 1972 [42 U.S.C. 4901–4918]; 23 CFR772.

4. *Land:* Section 4(f) of the Department of Transportation Act of 1966 [23 U.S.C. 138 and 49 U.S.C. 303]; 23 CFR part 774; Land and Water Conservation Fund (LWCF) [54 U.S.C. 200302–200310].

5. *Wildlife:* Endangered Species Act (ESA) [16 U.S.C. 1531–1544 and 1536]; Marine Mammal Protection Act [16 U.S.C. 1361–1423h], Anadromous Fish Conservation Act [16 U.S.C. 757(a)–757(f)]; Fish and Wildlife Coordination Act [16 U.S.C. 661–667(d)]; Migratory Bird Treaty Act (MBTA) [16 U.S.C. 703–712]; Magnuson-Stevenson Fishery Conservation and Management Act of 1976, as amended [16 U.S.C. 1801–1891d], with Essential Fish Habitat requirements [16 U.S.C. 1855(b)(2)].

6. *Historic and Cultural Resources:* Section 106 of the National Historic Preservation Act of 1966, as amended [54 U.S.C. 3006101 *et seq.*]; Archaeological Resources Protection Act of 1979 (ARPA) [16 U.S.C. 470(aa)–470(II)]; Preservation of Historical and Archaeological Data [54 U.S.C. 312501–312508]; Native American Grave Protection and Repatriation Act (NAGPRA) [25 U.S.C. 3001–3013; 18 U.S.C. 1170].

7. *Social and Economic:* Civil Rights Act of 1964 [42 U.S.C. 2000 d–2000d–1]; American Indian Religious Freedom Act [42 U.S.C. 1996]; Farmland Protection Policy Act (FPPA) [7 U.S.C. 4201–4209].

8. *Wetlands and Water Resources:* Clean Water Act (Section 319, Section 401, Section 404) [33 U.S.C. 1251–1387]; Coastal Barriers Resources Act (CBRA) [16 U.S.C. 3501–3510]; Coastal Zone Management Act (CZMA) [16 U.S.C. 1451–1466]; Safe Drinking Water Act (SDWA) [42 U.S.C. 300f–300j–26]; Rivers and Harbors Act of 1899 [33 U.S.C. 401–406]; Wild and Scenic Rivers Act [16 U.S.C. 1271–1287]; Emergency Wetlands Resources Act [16 U.S.C. 3921, 3931]; Wetlands Mitigation, [23 U.S.C. 119(g) and 133(b)(3)]; Flood Disaster Protection Act [42 U.S.C. 4001–4130].

9. *Hazardous Materials:* Comprehensive Environmental Response, Compensation, and Liability

Act (CERCLA) [42 U.S.C. 9601–9675]; Superfund Amendments and Reauthorization Act of 1986 (SARA); Resource Conservation and Recovery Act (RCRA) [42 U.S.C. 6901–6992(k)].

10. *Executive Orders:* E.O. 11990 Protection of Wetlands; E.O. 11988 Floodplain Management; E.O. 12898, Federal Actions to Address Environmental Justice in Minority Populations and Low Income Populations; E.O. 11593 Protection and Enhancement of Cultural Resources; E.O. 13007 Indian Sacred Sites; E.O. 13287 Preserve America; E.O. 11514 Protection and Enhancement of Environmental Quality; E.O. 13112 Invasive Species.

(Catalog of Federal Domestic Assistance Program Number 20.205, Highway Planning and Construction. The regulations implementing Executive Order 12372 regarding intergovernmental consultation on Federal programs and activities apply to this program.)

(Authority: 23 U.S.C. 139(l)(1)).

Issued on: September 15, 2021.

**Karen M. Brunelle,**

*Director, Office of Project Development, Federal Highway Administration, Tallahassee, Florida.*

[FR Doc. 2021–21091 Filed 10–7–21; 8:45 am]

**BILLING CODE 4910–RY–P**

## DEPARTMENT OF TRANSPORTATION

### Maritime Administration

**[Docket No. MARAD–2019–0011]**

### Deepwater Port License Application: SPOT Terminal Services, LLC—Draft General Conformity Determination

**AGENCY:** Maritime Administration, Department of Transportation.

**ACTION:** Notice of Draft General Conformity Determination.

**SUMMARY:** The Maritime Administration (MARAD) and the U.S. Coast Guard (USCG) announce the availability of the Draft General Conformity Determination to ensure that the air emissions associated with the Sea Port Oil Terminal (SPOT) Deepwater Port Project (Project or SPOT Project) conform with the Texas State Implementation Plan (SIP). A Notice of Application that summarized the SPOT Deepwater Port License Application was published in the **Federal Register** on March 4, 2019. A Notice of Intent to Prepare an Environmental Impact Statement (EIS) and Notice of Public Scoping Meetings was published in the **Federal Register** on March 7, 2019. A Notice of Availability of the Draft Environmental Impact Statement (EIS) and Notice of Public Meetings was published in the **Federal Register** on February 7, 2020. This notice incorporates the aforementioned **Federal Register** notices by reference. The SPOT Project proposes to provide United States (U.S.) crude oil loading services on very large crude carriers (VLCCs) and other crude oil carriers for export to the global market. Publication of this notice begins a 30-day comment period, requests public participation in the general conformity review process, and provides information on how to participate in this process.

**DATES:** To ensure your comments are considered, MARAD and the USCG request that all comments be submitted to the *http://www.regulations.gov* website or the Federal Docket Management Facility as detailed in the **ADDRESSES** section below, 30 days from the date of publication.

**ADDRESSES:** The SPOT Deepwater Port License Application, the Draft EIS, this Draft General Conformity Determination, and other associated documents are available for viewing at the Federal eRulemaking portal at *http://www.regulations.gov* under docket number MARAD–2019–0011 (*https://www.regulations.gov/docket/MARAD-2019-0011*). The Final EIS and Final General Conformity Determination, when published, will be announced and be available at the *Regulations.gov* website.

The public docket for the SPOT Deepwater Port License Application is maintained by the U.S. Department of Transportation, Docket Management Facility, West Building, Ground Floor, Room W12–140, 1200 New Jersey Avenue SE, Washington, DC 20590. Comments on the Draft General Conformity Determination may be submitted to this address and must include the docket number for this project, which is MARAD–2019–0011. The Federal Docket Management Facility's telephone number is 202–366–9317 or 202–366–9826; the fax number is 202–493–2251.

We encourage you to submit comments electronically through the Federal eRulemaking Portal at *http://www.regulations.gov.* If you submit your comments electronically, it is not necessary to also submit a hard copy by mail. If you cannot submit material using *http://www.regulations.gov,* please contact either Mr. Matthew Layman, USCG, or Dr. Efrain Lopez, MARAD, as listed in the following **FOR FURTHER INFORMATION CONTACT** section of this document. This section provides alternate instructions for submitting written comments. Additionally, if you go to the online docket and sign up for email alerts, you will be notified when comments are posted.

**FOR FURTHER INFORMATION CONTACT:** Mr. Matthew Layman, Project Manager, USCG, telephone: 202–372–1421, email: *Matthew.D.Layman@uscg.mil;* or Dr. Efrain Lopez, Project Manager, Office of Deepwater Ports and Port Conveyance, MARAD, telephone: 202–366–9761, email: *Efrain.Lopez@dot.gov.*

**SUPPLEMENTARY INFORMATION:**

#### Request for Comments

We request public comments or other relevant information related to the Draft General Conformity Determination for the proposed SPOT deepwater port. These comments will be considered in development of the Final General Conformity Determination. MARAD and the USCG prefer that comments be submitted electronically. Regardless of the method you use to submit comments or material, all submissions will be posted without change to the Federal Docket Management Facility website (*https://www.regulations.gov/docket/MARAD-2019-0011*) and will include any personal information you provide. Therefore, submitting this information makes it public. You may wish to read the Privacy and Use Notice that is available on the *http://www.regulations.gov* website, and the Department of Transportation (DOT) Privacy Act Notice that appeared in the **Federal Register** on April 11, 2000 (65 FR 19477), see Privacy Act section of this document. You may view docket submissions at the DOT Docket Management Facility or electronically at the *http://www.regulations.gov* website.

#### Background

On January 31, 2019, MARAD and USCG received an application from SPOT for all Federal authorizations required for a license to own, construct, and operate a deepwater port for the export of oil. The proposed deepwater port would be located in Federal waters approximately 27.2 to 30.8 nautical miles off the coast of Brazoria County, Texas. Texas was designated as the Adjacent Coastal State for the SPOT license application.

The Federal agencies involved held a public scoping meeting in connection with the evaluation of the SPOT license application. The public scoping meeting was held in Lake Jackson, Texas on March 20, 2019. The transcript of the scoping meeting is included on the public docket located at *https://www.regulations.gov/document/MARAD-2019-0011-0019.* The Federal agencies also held a Draft EIS public

comment meeting to receive comments on the Draft EIS. The public comment meeting was held in Lake Jackson, Texas on February 26, 2020. A second 30-day public comment period due to COVID began on May 1, 2021 and ended on May 31, 2021. The transcripts of the DEIS public comment meetings are also included on the public docket at *https://www.regulations.gov/document/MARAD-2019-0011-0019-1192.*

The purpose of this Draft General Conformity Determination is to ensure that the air emissions associated with the SPOT Project conform with the Texas SIP in accordance with 40 CFR part 93, subpart B. The Draft General Conformity Determination is currently available for public review at the Federal docket website: *http://www.regulations.gov* under docket number MARAD–2019–0011.

This review and determination is triggered by air emissions from construction activities proposed by SPOT Terminals, LLC (the Applicant) that would exceed the applicable General Conformity *de minimis* threshold of 50 tons per year of nitrogen oxides or volatile organic compounds set by *Determinations of Attainment by the Attainment Date, Extensions of the Attainment Date, and Reclassification of Several Areas Classified as Moderate for the 2008 Ozone National Ambient Air Quality Standards,* published in the **Federal Register** on August 23, 2019 (84 FR 44238), within the Houston-Galveston-Brazoria (HGB) area. The HGB area includes Brazoria, Chambers, Fort Bend, Galveston, Harris, Liberty, Montgomery, and Waller counties, and extends 9 nautical miles offshore over state water.

**Summary of the License Application**

SPOT is proposing to own, construct, and operate a deepwater port terminal in the Gulf of Mexico to export domestically produced crude oil. Use of the deepwater port would include the loading of various grades of crude oil at flow rates of up to 85,000 barrels per hour (bph). The SPOT deepwater port would allow for up to two very large crude carriers (VLCCs) or other crude oil carriers to moor at single point mooring (SPM) buoys and connect with the deepwater port via floating crude oil hoses and floating vapor recovery hoses. The maximum frequency of loading VLCCs or other crude oil carriers would be 2 million barrels per day, 365 days per year.

The proposed SPOT Deepwater Port (DWP) would be located in Federal waters of the Gulf of Mexico, in Galveston Area Outer Continental Shelf lease blocks 463 and A–59, approximately 27.2 to 30.8 nautical miles off the coast of Brazoria County, Texas, in water depths of approximately 115 feet. Onshore components of the proposed Project would be located in both Brazoria and Harris counties.

The overall project would consist of both onshore and offshore marine components. The onshore components would consist of:

- Modifications to the existing Enterprise Crude Houston (ECHO) Terminal, including four electric motor-driven mainline crude oil pumps, four electric motor-driven booster crude oil pumps, and one measurement skid to support delivery of crude oil to the proposed Oyster Creek Terminal;
- One 50.1-mile, 36-inch-diameter ECHO to Oyster Creek Pipeline;
- One pipeline interconnection from the existing Rancho II 36-inch-diameter pipeline to the ECHO to Oyster Creek Pipeline (Rancho II Junction);
- A new Oyster Creek Terminal on approximately 140 acres of land, including six electric motor-driven mainline crude oil pumps with the capacity to push crude oil to the offshore pipelines at a rate of up to 85,000 bph, four electric motor-driven booster crude oil pumps, seven aboveground storage tanks (each with a capacity of 685,000 barrels [600,000 barrels of working storage]) for a total onshore storage capacity of approximately 4.8 million barrels (4.2 million barrels working storage) of crude oil, metering equipment, two permanent and one portable vapor combustion units, and a firewater system;
- Two collocated 12.2-mile, 36-inch-diameter Oyster Creek to Shore Pipelines; and
- Ancillary facilities for the onshore pipelines, including ten mainline valves, of which six would be along the ECHO to Oyster Creek Pipeline and four along the Oyster Creek to Shore Pipelines, pig launchers for the ECHO to Oyster Creek Pipeline, and pig launchers and receivers for the Oyster Creek to Shore Pipelines.

The offshore and marine components would consist of:

- Two collocated, bi-directional, 46.9-mile, 36-inch-diameter crude oil offshore pipelines for crude oil delivery from the Oyster Creek Terminal to the platform;
- One fixed offshore platform with eight piles, four decks, and three vapor combustion units;
- Two SPM buoys to concurrently moor two VLCCs or other crude oil carriers with capacities between 120,000 and 320,000 deadweight tonnage for loading up to 365 days per year, including floating crude oil and vapor recovery hoses;
- Four pipeline end manifolds (PLEMs)—two per SPM buoy—to provide the interconnection between the SPOT DWP and the SPM buoys;
- Four 0.66-nautical mile, 30-inch-diameter pipelines (two per PLEM) to deliver crude oil from the platform to the PLEMs;
- Four 0.66-nautical mile, 16-inch diameter vapor recovery pipelines (two per PLEM) to connect the VLCC or other crude oil carrier to the three vapor combustion units on the platform.
- Three service vessel moorings, located in the southwest corner of Galveston Area lease block 463; and
- An anchorage area in Galveston Area lease block A–59, which would not contain any infrastructure.

As stated, the purpose of this notice is to announce the availability of the Draft General Conformity Determination to ensure that the SPOT Project conforms with the Texas SIP. Comments are welcomed.

**Privacy Act**

Regardless of the method used for submitting comments or materials, all submissions will be posted, without change, to the *http://www.regulations.gov* website and will include any personal information you provide. Therefore, submitting this information to the docket makes it public. You may wish to read the Privacy and Security Notice and the User Notice that are available at *https://www.federalregister.gov/documents/2005/03/24/05-5823/establishment-of-a-new-system-of-records-notice-for-the-federal-docket-management-system.* The Privacy Act notice regarding the Federal Docket Management System is available in the March 24, 2005 issue of the **Federal Register** (70 FR 15086).

(Authority: 33 U.S.C. 1501 *et seq.,* 49 CFR 1.93(h)).

By Order of the Acting Maritime Administrator.

**T. Mitchell Hudson, Jr.,**

*Secretary, Maritime Administration.*

[FR Doc. 2021–22048 Filed 10–7–21; 8:45 am]

BILLING CODE 4910–81–P

## DEPARTMENT OF TRANSPORTATION

### National Highway Traffic Safety Administration

**[Docket No. NHTSA–2016–0096; Notice 2]**

### Forest River, Inc., Denial of Petition for Decision of Inconsequential Noncompliance

**AGENCY:** National Highway Traffic Safety Administration (NHTSA), Department of Transportation (DOT).

**ACTION:** Denial of petition.

**SUMMARY:** Forest River, Inc. (Forest River), has determined that certain model year (MY) 2012–2016 Starcraft and 2014–2016 StarTrans buses do not fully comply with Federal Motor Vehicle Safety Standard (FMVSS) No. 217, *Bus Emergency Exits and Window Retention and Release*. Forest River filed two separate noncompliance reports on April 14, 2016, and revised them both on June 7, 2016. Forest River also petitioned NHTSA on May 31, 2016, for a decision that the subject noncompliance is inconsequential as it relates to motor vehicle safety.

**FOR FURTHER INFORMATION CONTACT:** Daniel Lind, Office of Vehicle Safety Compliance, NHTSA, telephone (202) 366–7235, facsimile (202) 366–5930.

**SUPPLEMENTARY INFORMATION:**

### I. Overview

Forest River has determined that certain MY 2012–2016 Starcraft and 2014–2016 StarTrans buses do not fully comply with paragraph S5.5.1 of FMVSS No. 217, *Bus Emergency Exits and Window Retention and Release* (49 CFR 571.217). Forest River filed two separate noncompliance reports on April 14, 2016, and revised them both on June 7, 2016, pursuant to 49 CFR part 573, *Defect and Noncompliance Responsibility and Reports*. Forest River also petitioned NHTSA on May 31, 2016, pursuant to 49 U.S.C. 30118(d) and 30120(h) and 49 CFR part 556, for an exemption from the notification and remedy requirements of 49 U.S.C. chapter 301 on the basis that this noncompliance is inconsequential as it relates to motor vehicle safety.

Notice of receipt of the petition was published in the **Federal Register** (82 FR 47076), with a 30-day public comment period, on October 10, 2017. No comments were received. To view the petition and all supporting documents, log onto the Federal Docket Management System (FDMS) website at: *http://www.regulations.gov/*. Then follow the online search instructions to locate docket number ''NHTSA–2016–0096.''

### II. Buses Involved

Affected are approximately 476 MY 2014–2016 StarTrans Bus Senator 2, Senator HD, Candidate 2, President, and PS 2 model buses manufactured between May 16, 2014 and April 6, 2016; and approximately 7,716 MY 2012–2016 Starcraft Bus Xpress, Starquest, Starlite, Allstar, Allstar XL, MVP, Ultrastar, and XLT model buses manufactured between January 1, 2012 and April 6, 2016.

### III. Noncompliance

Forest River explains that the noncompliance results from the misplacement of the emergency egress labels on the rear emergency exit window of the subject buses. Specifically, the emergency egress labels on the affected buses were centered on the window and are located within 25 centimeters of each of the release mechanisms, and not within 16 centimeters, as required by paragraph S5.5.1 of FMVSS No. 217. The labels are approximately 9 centimeters (incorrectly specified as 11 centimeters in the petition) from where they are required to be on the rear emergency exit window.

### IV. Rule Requirements

Paragraph S5.5.1 of FMVSS No. 217 includes the requirements relevant to this petition:

- In buses other than school buses, and except for windows serving as emergency exits in accordance with paragraph S5.2.2.3(b) and doors in buses with a GVWR of 10,000 pounds or less, each emergency exit door shall have the designation ''Emergency Door'' or ''Emergency Exit,'' and every other emergency exit shall have the designation ''Emergency Exit'' followed by concise operating instructions describing each motion necessary to unlatch and open the exit, located within 16 centimeters of the release mechanism.

### V. Summary of Forest River's Arguments

Forest River described the subject noncompliance and stated its belief that the noncompliance is inconsequential as it relates to motor vehicle safety.

In support of its petition, Forest River submitted the following reasoning:

(a) Since the promulgation of the FMVSS No. 217 original final rule, the primary purpose in requiring the emergency exit markings to be located within a set distance from the release mechanism has been to ensure that they are: (1) Located near the point of release and (2) are visible to passengers. *See* 37 FR 9394, 9395 (May 10, 1972, final rule). Both of these safety objectives are still met in the affected Forest River vehicles.

(b) All of the emergency egress windows are located on the rear wall of the affected buses. The markings are readable and the instructions on how to operate the release mechanism are concise and understandable as currently installed. The release mechanism is painted red, and contrasts with the black window frame and hardware. The emergency exit marking, centered in the window, is unobstructed by any other part of the window or the vehicle and should be readily apparent to passengers. Consequently, the location of the emergency egress designation labels in relation to the release mechanism do not compromise safety with regard to a passenger's ability to identify an emergency egress location or easily operate the release mechanism.

(c) The affected vehicles are transit buses, generally operated by private companies and would typically have trained drivers operating the vehicles and present to assist passengers exiting the vehicle in the event of an emergency. With a trained professional driver present, an emergency exit marking that is located approximately 9 centimeters (stated as ''4 inches'' in the petition) further than allowed from the release mechanism is unlikely to have any tangible impact on passenger safety.

(d) The agency has previously granted petitions for inconsequential noncompliance under FMVSS No. 217 for conditions with the potential for a more direct and serious impact on safety. *See* 63 FR 32694, New Flyer of America, Inc. (granting petition for inconsequential noncompliance where buses were manufactured with only one emergency exit instead of two); and 70 FR 14748, IC Corporation (granting petition for inconsequential noncompliance where school buses were manufactured with two emergency doors under the same post and roof bow panel space).

(e) Forest River is not aware of any complaints, warranty claims, accidents, injuries, or other field incidents related to the emergency egress markings not meeting the requirements of the standard. Forest River has corrected the noncompliance on all the remaining windows in its possession. Forest River has also advised that Lippert Components, Inc. (LCI), the manufacturer of the windows and emergency exit marking labels, has corrected the noncompliance in its own production beginning on April 7, 2016.

Forest River's complete petition and all supporting documents are available by logging onto the Federal Docket Management System (FDMS) website at: *https://www.regulations.gov/* and following the online search instructions

to locate the docket number listed in the title of this notice.

In summation, Forest River believes that the described noncompliance in the subject buses is inconsequential as it relates to motor vehicle safety, and that its petition to exempt Forest River from providing notification of the noncompliance, as required by 49 U.S.C. 30118, and remedying the noncompliance, as required by 49 U.S.C. 30120, should be granted.

Prior to making a decision, NHTSA contacted Forest River for clarification on three aspects of its petition. First, NHTSA sought confirmation that Forest River's petition sought an exemption from the notification and remedy requirements for both StarTrans and Starcraft buses. Second, NHTSA sought clarification regarding the measured distance between the actual label location and the required location of the label. Third, NHTSA sought clarification regarding whether the rear emergency exit window can be opened by operating a single release mechanism. In response, Forest River verified that it sought an exemption for both Starcraft and StarTrans buses. Forest River also confirmed that the measured distance between the actual label location and the requirement should have read ''. . . a difference of approximately 9 centimeters. . . .'' Lastly, Forest River confirmed that both release mechanisms must be operated in order to open the rear emergency exit window.

## VI. NHTSA's Analysis

### *A. General Principles*

Congress passed the National Traffic and Motor Vehicle Safety Act of 1966 (the ''Safety Act'') with the express purpose of reducing motor vehicle accidents, deaths, injuries, and property damage. *See* 49 U.S.C. 30101. To this end, the Safety Act empowers the Secretary of Transportation to establish and enforce mandatory Federal Motor Vehicle Safety Standards (FMVSS). *See* 49 U.S.C. 30111. The Secretary has delegated this authority to NHTSA. *See* 49 CFR 1.95.

NHTSA adopts a FMVSS only after the agency has determined that the performance requirements are objective and practicable and meet the need for motor vehicle safety. *See* 49 U.S.C. 30111(a). Thus, there is a general presumption that the failure of a motor vehicle or an item of motor vehicle equipment to comply with a FMVSS increases the risk to motor vehicle safety beyond the level deemed appropriate by NHTSA through the rulemaking process. To protect the public from such risks, manufacturers whose products fail to comply with a FMVSS are normally required to conduct a safety recall under which they must notify owners, purchasers, and dealers of the noncompliance and provide a free remedy. *See* 49 U.S.C. 30118–30120. However, Congress has recognized that, under some limited circumstances, a noncompliance could be ''inconsequential'' to motor vehicle safety. It therefore established a procedure under which NHTSA may consider whether it is appropriate to exempt a manufacturer from its notification and remedy (*i.e.,* recall) obligations. *See* 49 U.S.C. 30118(d), 30120(h). The agency's regulations governing the filing and consideration of petitions for inconsequentiality exemptions are set out at 49 CFR part 556.

Under the Safety Act and Part 556, inconsequentiality exemptions may be granted only in response to a petition from a manufacturer, and then only after notice in the **Federal Register** and an opportunity for interested members of the public to present information, views, and arguments on the petition. In addition to considering public comments, the agency will draw upon its own understanding of safety-related systems and its experience in deciding the merits of a petition. An absence of opposing argument and data from the public does not require NHTSA to grant a manufacturer's petition. Neither the Safety Act nor Part 556 define the term ''inconsequential.'' Rather, the agency determines whether a particular noncompliance is inconsequential to motor vehicle safety based upon the specific facts before it in a particular petition. In some instances, NHTSA has determined that a manufacturer met its burden of demonstrating that a noncompliance is inconsequential to safety. For example, a label intended to provide safety advice to an owner or occupant may have a misspelled word, or it may be printed in the wrong format or the wrong type size. Where a manufacturer has shown that the discrepancy with the safety requirement is unlikely to lead to any misunderstanding, NHTSA has granted an inconsequentiality exemption, especially where other sources of correct information are available. *See, e.g.,* General Motors, LLC, Grant of Petition for Decision of Inconsequential Noncompliance, 81 FR 92963 (Dec. 20, 2016).

An important issue to consider in determining inconsequentiality based upon NHTSA's prior decisions on noncompliance issues was the safety risk to individuals who experience the type of event against which the recall would otherwise protect.[1] NHTSA also does not consider the absence of complaints or injuries to show that the issue is inconsequential to safety. ''Most importantly, the absence of a complaint does not mean there have not been any safety issues, nor does it mean that there will not be safety issues in the future.'' [2] ''[T]he fact that in past reported cases good luck and swift reaction have prevented many serious injuries does not mean that good luck will continue to work.'' [3]

Arguments that only a small number of vehicles or items of motor vehicle equipment are affected have also not justified granting an inconsequentiality petition.[4] Similarly, NHTSA has rejected petitions based on the assertion that only a small percentage of vehicles or items of equipment are likely to actually exhibit a noncompliance. The percentage of potential occupants that could be adversely affected by a noncompliance does not determine the question of inconsequentiality. Rather, the issue to consider is the consequence to an occupant who is exposed to the consequence of that noncompliance.[5]

[1] *See Gen. Motors, LLC; Grant of Petition for Decision of Inconsequential Noncompliance,* 78 FR 35355 (June 12, 2013) (finding noncompliance had no effect on occupant safety because it had no effect on the proper operation of the occupant classification system and the correct deployment of an air bag); *Osram Sylvania Prods. Inc.; Grant of Petition for Decision of Inconsequential Noncompliance,* 78 FR 46000 (July 30, 2013) (finding occupant using noncompliant light source would not be exposed to significantly greater risk than occupant using similar compliant light source).

[2] *Morgan 3 Wheeler Limited; Denial of Petition for Decision of Inconsequential Noncompliance,* 81 FR 21663, 21666 (Apr. 12, 2016).

[3] *United States* v. *Gen. Motors Corp.,* 565 F.2d 754, 759 (D.C. Cir. 1977) (finding defect poses an unreasonable risk when it ''results in hazards as potentially dangerous as sudden engine fire, and where there is no dispute that at least some such hazards, in this case fires, can definitely be expected to occur in the future'').

[4] *See Mercedes-Benz, U.S.A., L.L.C.; Denial of Application for Decision of Inconsequential Noncompliance,* 66 FR 38342 (July 23, 2001) (rejecting argument that noncompliance was inconsequential because of the small number of vehicles affected); *Aston Martin Lagonda Ltd.; Denial of Petition for Decision of Inconsequential Noncompliance,* 81 FR 41370 (June 24, 2016) (noting that situations involving individuals trapped in motor vehicles—while infrequent—are consequential to safety); *Morgan 3 Wheeler Ltd.; Denial of Petition for Decision of Inconsequential Noncompliance,* 81 FR 21663, 21664 (Apr. 12, 2016) (rejecting argument that petition should be granted because the vehicle was produced in very low numbers and likely to be operated on a limited basis).

[5] *See Gen. Motors Corp.; Ruling on Petition for Determination of Inconsequential Noncompliance,* 69 FR 19897, 19900 (Apr. 14, 2004); *Cosco, Inc.; Denial of Application for Decision of Inconsequential Noncompliance,* 64 FR 29408, 29409 (June 1, 1999).

*B. Response to Forest River's Arguments*

NHTSA reviewed Forest River's arguments that the subject noncompliance is inconsequential to motor vehicle safety. Forest River contends that the emergency egress label for the rear window exit being located 25 centimeters distant from the two red dual release mechanisms, rather than within the 16 centimeters required by FMVSS No. 217, poses little, if any, risk to motor vehicle safety. NHTSA does not agree, as described below:

The purpose of FMVSS No. 217 is to minimize the likelihood of occupants being thrown from the bus and to provide a means of *readily accessible emergency egress* (emphasis added) (*See* 49 CFR 571.217 S2). The requirements at S5.5.1, *Emergency Exit Identification,* of FMVSS No. 217, at issue here, are specific to identifying emergency exits, identifying the release mechanism(s) for emergency exits, and the associated operating instructions for the release mechanism(s). These requirements are threefold: (1) An exit must be identified as an ''Emergency Exit,'' (2) the identification as an ''Emergency Exit'' must be followed by ''concise operating instructions,'' and (3) both the ''Emergency Exit'' identification and ''concise operating instructions'' must be located ''within 16 centimeters'' of the release mechanism(s) for the associated emergency exit. In the present case, the rear emergency window is identified as an ''Emergency Exit'' via a sole label centered along the rear emergency window. However, this sole label fails to meet the other two requirements of S5.5.1—the label does not contain ''concise operating instructions describing each motion necessary to unlatch and open the exit,'' and the label is not ''within 16 centimeters of the release mechanism.'' These two points are further discussed below.

Regarding the instructions, the rear emergency exit window has two release mechanisms which operate independently of each other. As such, both mechanisms need to be operated to open the emergency exit window. The petitioner installed one label centered along the window that, in part, reads: ''Pull red handle up. Push window out.'' These instructions are incomplete, as they only reference a single red handle. Following the instructions on the label, a passenger would operate one release mechanism and attempt to push the window out. However, the emergency exit window would not open, as the second release mechanism would remain latched. As such, we are not persuaded by Forest River's statement that the instructions on how to operate the release mechanism are concise and understandable as currently installed, because there are indeed two such mechanisms that must be used for the emergency exit to open.

Regarding the location, the sole label is centered along the rear emergency exit window, with its outermost edge located at a distance of 25 cm from the nearest edge of the release mechanism. In its petition, Forest River argues that because the color of the release mechanism contrasts with the window frame and hardware, and the label is centered in the window and unobstructed, the label ''should be readily apparent to passengers.'' As a result of this presumption by Forest River, it concludes that the location of the label does not compromise safety with regard to a passenger's ability to identify an emergency egress location. However, the fundamental issue in this instance is not the identification of the emergency egress location, rather it is the identification of the two release mechanism locations. As such, NHTSA is not persuaded by Forest River's presumptive argument that the location of this label does not compromise safety, because it does not address the identification of the two release mechanism locations or state that both handles must be pulled.

Regarding the bus driver, NHTSA does not accept Forest River's argument that transit bus drivers can always be counted on to assist passenger emergency egress. The condition or availability of the bus driver is highly dependent on the severity of the event.

*C. Remaining Arguments*

Forest River referenced two inconsequential noncompliance petitions NHTSA had previously granted to support its petition. According to Forest River, these petitions had a direct and serious impact on safety. The first petition, from New Flyer of America, Inc. (*see* 63 FR 32694), involved transit buses that had only one emergency exit on the right side of the bus instead of two, as required. These buses had 3.28 times the required exit area, with two emergency exit windows on the left side, one emergency exit window on the right side and two roof exits. Thus, the buses had the minimum number of emergency exits required by FMVSS No. 217. However, these exits were not distributed properly. Instead of a second emergency exit on the right side, these buses had an additional roof exit. The agency decided that the additional roof exit provided for an additional level of safety during a rollover event, and granted the petition. NHTSA does not agree that granting this prior petition supports Forest River's arguments in this case. Here, the issue is identifying the emergency exit release mechanisms and their operation.

The second petition cited by Forest River involved two side emergency exit doors located opposite each other and within the same post and roof bow panel space. That petition argued that the requirement prohibiting two exit doors from being located opposite each other appeared to be related to the structural integrity of a bus body with this configuration. The petitioner indicated that it had no reports of any structural failures in the area around the emergency doors, but stated that it would extend to owners of the noncompliant vehicles a 15-year warranty for any structural or panel failures related to the location of the doors. NHTSA agreed with the petitioner that in that case, the noncompliance did not compromise safety in terms of emergency exit capability in proportion to maximum occupant capacity, access to side emergency doors, visibility of the exits, or the ability of bus occupants to exit after an accident. Again, NHTSA does not agree that granting this prior petition supports granting Forest River's petition here, because the identification of the emergency exits in that case was not at issue.

**VII. NHTSA's Decision**

In consideration of the foregoing, NHTSA finds that Forest River has not met its burden of persuasion that the subject FMVSS No. 217 noncompliance in the affected vehicles is inconsequential to motor vehicle safety. Accordingly, Forest River's petition is hereby denied and Forest River is obligated to provide notification of, and a free remedy for, that noncompliance under 49 U.S.C. 30118 and 30120.

(Authority: 49 U.S.C. 30118, 30120: delegations of authority at 49 CFR 1.95 and 501.8)

**Joseph Kolly,**

*Acting Associate Administrator for Enforcement.*

[FR Doc. 2021–22003 Filed 10–7–21; 8:45 am]

BILLING CODE 4910–59–P

## DEPARTMENT OF THE TREASURY

### List of Countries Requiring Cooperation With an International Boycott

In accordance with section 999(a)(3) of the Internal Revenue Code of 1986,

the Department of the Treasury is publishing a current list of countries which require or may require participation in, or cooperation with, an international boycott (within the meaning of section 999(b)(3) of the Internal Revenue Code of 1986).

On the basis of the best information currently available to the Department of the Treasury, the following countries require or may require participation in, or cooperation with, an international boycott (within the meaning of section 999(b)(3) of the Internal Revenue Code of 1986).

Iraq
Kuwait
Lebanon
Libya
Qatar
Saudi Arabia
Syria
Yemen

**Kevin Nichols,**

*International Tax Counsel, (Tax Policy).*

[FR Doc. 2021–22027 Filed 10–7–21; 8:45 am]

**BILLING CODE 4810–AK–P**

## DEPARTMENT OF VETERANS AFFAIRS

### Advisory Committee on the Readjustment of Veterans, Notice of Meeting, Amended

The Department of Veterans Affairs (VA) gives notice under the Federal Advisory Committee Act, 5 U.S.C. App. 2, that the Advisory Committee on the Readjustment of Veterans will hold three virtual meetings. The meetings will begin and end as follows:

| Date | Time | Open session |
|---|---|---|
| October 18, 2021 | 9:00 a.m. to 5:00 p.m. EST | Yes. |
| October 19, 2021 | 9:00 a.m. to 5:00 p.m. EST | Yes. |
| October 20, 2021 | 9:00 a.m. to 12:00 p.m. EST | Yes. |

The meeting sessions are open to public.

The purpose of the Committee is to advise the Department of Veterans Affairs (VA) regarding the provision by VA of benefits and services to assist Veterans in the readjustment to civilian life. In carrying out this duty, the Committee shall take into account the needs of Veterans who served in combat theaters of operation. The Committee assembles, reviews, and assesses information relating to the needs of Veterans readjusting to civilian life and the effectiveness of VA services in assisting Veterans in that readjustment.

The Committee, comprised of 13 subject matter experts, advises the Secretary, through the VA Readjustment Counseling Service, on the provision by VA of benefits and services to assist Veterans in the readjustment to civilian life. In carrying out this duty, the Committee assembles, reviews, and assesses information relating to the needs of Veterans readjusting to civilian life and the effectiveness of VA services in assisting Veterans in that readjustment, specifically taking into account the needs of Veterans who served in combat theaters of operation.

For public members wishing to join the meeting, please use the following Webex link: *https://veteransaffairs.webex.com/webappng/sites/veteransaffairs/meeting/download/d83ece0e56744b8ba40bbfa197756d6a?siteurl=veteransaffairs&MTID=mec58f4a2bdcbe7b8ac65c9b1e4f72597.*

No time will be allotted for receiving oral comments from the public; however, the committee will accept written comments from interested parties on issues outlined in the meeting agenda or other issues regarding the readjustment of Veterans. Parties should contact Mr. Richard Barbato via email at *VHA10RCSAction@va.gov,* or Department of Veterans Affairs, Readjustment Counseling Service (10RCS), 810 Vermont Avenue, Washington, DC 20420. Any member of the public seeking additional information should contact Mr. Barbato at the phone number or email addressed noted above.

Dated: October 5, 2021.

**Jelessa M. Burney,**

*Federal Advisory Committee Management Officer.*

[FR Doc. 2021–22050 Filed 10–7–21; 8:45 am]

**BILLING CODE P**

# FEDERAL REGISTER

Vol. 86 Friday,

No. 193 October 8, 2021


Part II

## Bureau of Consumer Financial Protection

12 CFR Part 1002

Small Business Lending Data Collection Under the Equal Credit Opportunity Act (Regulation B); Proposed Rule

**BUREAU OF CONSUMER FINANCIAL PROTECTION**

**12 CFR Part 1002**

**[Docket No. CFPB–2021–0015]**

**RIN 3170–AA09**

## Small Business Lending Data Collection Under the Equal Credit Opportunity Act (Regulation B)

**AGENCY:** Bureau of Consumer Financial Protection.

**ACTION:** Proposed rule; request for public comment.

**SUMMARY:** The Bureau of Consumer Financial Protection (Bureau) is publishing for public comment a proposed rule amending Regulation B to implement changes to the Equal Credit Opportunity Act (ECOA) made by section 1071 of the Dodd-Frank Wall Street Reform and Consumer Protection Act (Dodd-Frank Act). Consistent with section 1071, the Bureau is proposing to require covered financial institutions to collect and report to the Bureau data on applications for credit for small businesses, including those that are owned by women or minorities. The Bureau's proposal also addresses its approach to privacy interests and the publication of section 1071 data; shielding certain demographic data from underwriters and other persons; recordkeeping requirements; enforcement provisions; and the proposed rule's effective and compliance dates.

**DATES:** Comments must be received on or before January 6, 2022.

**ADDRESSES:** You may submit comments, identified by Docket No. CFPB–2021–0015 or RIN 3170–AA09, by any of the following methods:

- *Federal eRulemaking Portal: https://www.regulations.gov.* Follow the instructions for submitting comments.
- *Email: 2021-NPRM-1071@cfpb.gov.* Include Docket No. CFPB–2021–0015 or RIN 3170–AA09 in the subject line of the message.
- *Mail/Hand Delivery/Courier:* Comment Intake—Section 1071 Small Business Lending Data Collection, Bureau of Consumer Financial Protection, 1700 G Street NW, Washington, DC 20552.

*Instructions:* The Bureau encourages the early submission of comments. All submissions should include the agency name and docket number or Regulatory Information Number (RIN) for this rulemaking. Because paper mail in the Washington, DC area and at the Bureau is subject to delay, and in light of difficulties associated with mail and hand deliveries during the COVID–19 pandemic, commenters are encouraged to submit comments electronically. In general, all comments received will be posted without change to *https://www.regulations.gov.* In addition, once the Bureau's headquarters reopens, comments will be available for public inspection and copying at 1700 G Street NW, Washington, DC 20552, on official business days between the hours of 10 a.m. and 5 p.m. Eastern Time. At that time, you can make an appointment to inspect the documents by telephoning 202–435–7275.

All comments, including attachments and other supporting materials, will become part of the public record and subject to public disclosure. Proprietary information or sensitive personal information, such as account numbers or Social Security numbers, or names of other individuals, should not be included. Comments will not be edited to remove any identifying or contact information.

**FOR FURTHER INFORMATION CONTACT:** Camille Gray, Paralegal Specialist; Tola Adenuga, Regulatory Implementation and Guidance Specialist; Tarrian Ellis, Honors Attorney; Jaydee DiGiovanni, Counsel; Kristine M. Andreassen, Pavitra Bacon, Benjamin Cady, Joseph Devlin, Amy Durant, Gregory Evans, David Jacobs, Kathryn Lazarev, Lawrence Lee, Kristen Phinnessee, or Michael Scherzer, Senior Counsels, Office of Regulations, at 202-435-7700 or *https://reginquiries.consumerfinance.gov/.* If you require this document in an alternative electronic format, please contact *CFPB_Accessibility@cfpb.gov.*

**SUPPLEMENTARY INFORMATION:**

### I. Summary of the Proposed Rule

In 2010, Congress passed the Dodd-Frank Act. Section 1071 of that Act amended ECOA[1] to require that financial institutions collect and report to the Bureau certain data regarding applications for credit for women-owned, minority-owned, and small businesses.[2] Section 1071's statutory purposes are to (1) facilitate enforcement of fair lending laws, and (2) enable communities, governmental entities, and creditors to identify business and community development needs and opportunities of women-owned, minority-owned, and small businesses.

Section 1071 specifies a number of data points that financial institutions are required to collect and report, and also provides authority for the Bureau to require any additional data that the Bureau determines would aid in fulfilling section 1071's statutory purposes. Section 1071 also contains a number of other requirements, including those that address restricting the access of underwriters and other persons to certain 1071 data; recordkeeping; publication of 1071 data; and modifications or deletions of data prior to publication in order to advance a privacy interest.

Section 1071 directs the Bureau to prescribe such rules and issue such guidance as may be necessary to carry out, enforce, and compile data pursuant to section 1071, and permits the Bureau to adopt exceptions to any requirement or to exempt financial institutions from the requirements of section 1071 as the Bureau deems necessary or appropriate to carry out the purposes of section 1071. The Bureau is proposing to add a new subpart B to Regulation B to implement the requirements of section 1071.[3] Key aspects of the Bureau's proposal are summarized below.

If finalized, the Bureau's proposed rule would create the first comprehensive database of small business credit applications in the United States. This would include critical information about women-owned and minority-owned small businesses to help regulators and the public identify and address fair lending concerns. The database would also enable a range of stakeholders to better identify business and community development needs and opportunities for small businesses, including women-owned and minority-owned small businesses. Just as the Bureau works in other ways to help foster fairness and opportunity in consumer financial services markets for all consumers, the proposed 1071 rule is structured to realize these same goals for the small business market—for *all* small businesses within the scope of the rule, including those that are owned by women and minorities. Research indicates that minority-owned small businesses face particular obstacles, as do those that are women-owned, but the current lack of comprehensive, quantitative data has made it difficult to understand the extent of these obstacles and address them with responsive

[1] 15 U.S.C. 1691 *et seq.*

[2] Public Law 111–203, tit. X, section 1071, 124 Stat. 1376, 2056 (2010), codified at ECOA section 704B, 15 U.S.C. 1691c–2.

[3] The Bureau interpreted section 1071 to mean that obligations for financial institutions to collect, maintain, and submit data ''do not arise until the Bureau issues implementing regulations and those regulations take effect.'' *See* Letter from Leonard Kennedy, General Counsel, CFPB, to Chief Executive Officers of Financial Institutions under Section 1071 of the Dodd-Frank Act (Apr. 11, 2011), *https://files.consumerfinance.gov/f/2011/04/GC-letter-re-1071.pdf.*

policy. By shining a light on lending practices in this area, the Bureau believes that the 1071 data would not only foster a culture of compliance but bring particular attention to the underserved parts of the small business market that have traditionally faced the greatest obstacles to success. In this way, the proposed rule is intended to help small businesses drive inclusive and equitable growth.

*Scope.* The Bureau is proposing to require financial institutions to collect and report 1071 data regarding applications for credit for small businesses, including those that are owned by women and minorities. The Bureau is not proposing to require that financial institutions collect and report data regarding applications for women-owned and minority-owned businesses that are *not* small. Because most existing businesses are small businesses, covering small businesses necessarily means nearly all women-owned and minority-owned businesses will also be covered. The Bureau believes that this scope is consistent with the statute and will allow the rule to carry out section 1071's purposes without requiring collection of data that would be of limited utility.

*Covered financial institutions.* Consistent with language from section 1071, the Bureau is proposing to define a ''financial institution'' to include any partnership, company, corporation, association (incorporated or unincorporated), trust, estate, cooperative organization, or other entity that engages in any financial activity. Under the proposed definition, the Bureau's 1071 rule would apply to a variety of entities that engage in small business lending, including depository institutions (*i.e.,* banks, savings associations, and credit unions),[4] online lenders, platform lenders, community development financial institutions (both depository and nondepository institutions), lenders involved in equipment and vehicle financing (captive financing companies and independent financing companies), commercial finance companies, governmental lending entities, and nonprofit nondepository lenders.[5]

The Bureau's proposal uses the term ''covered financial institution'' to refer to those financial institutions that would be required to comply with section 1071's data collection and reporting requirements. The Bureau is proposing that a covered financial institution would be a financial institution that originated at least 25 covered credit transactions for small businesses in each of the two preceding calendar years. The Bureau is not proposing an asset-based exemption threshold for depository institutions, or any other general exemptions for particular categories of financial institutions.

The Bureau is also proposing to permit creditors that are not covered financial institutions to voluntarily collect and report data under section 1071 in certain circumstances.

*Covered credit transactions.* The Bureau is proposing to require that covered financial institutions collect and report data regarding covered applications from small businesses for covered credit transactions. The Bureau is proposing to define a ''covered credit transaction'' as one that meets the definition of business credit under existing Regulation B, with certain exceptions. Loans, lines of credit, credit cards, and merchant cash advances (including such credit transactions for agricultural purposes and those that are also covered by the Home Mortgage Disclosure Act of 1975 (HMDA)[6]) would all be covered credit transactions within the scope of this proposed rule. The Bureau is proposing to exclude trade credit, public utilities credit, securities credit, and incidental credit. Factoring, leases, consumer-designated credit used for business purposes, and credit secured by certain investment properties would also not be covered credit transactions.

*Covered applications.* The Bureau is proposing to define a ''covered application''—which would trigger data collection and reporting and related requirements—as an oral or written request for a covered credit transaction that is made in accordance with procedures used by a financial institution for the type of credit requested. This proposed definition of covered application is largely consistent with the existing Regulation B definition of that term. However, the Bureau is also proposing that certain circumstances would not be covered applications, even if they are considered applications under existing Regulation B. Specifically, the Bureau is proposing that a covered application does not include (1) reevaluation, extension, or renewal requests on an existing business credit account, unless the request seeks additional credit amounts; or (2) inquiries and prequalification requests.

*Small business definition.* The Bureau is proposing to define a ''small business,'' about whose applications for credit data must be collected and reported, by reference to the definitions of ''business concern'' and ''small business concern'' as set out in the Small Business Act[7] and Small Business Administration (SBA) regulations. However, in lieu of using the SBA's size standards for defining a small business concern, the Bureau's proposed definition would look to whether the business had $5 million or less in gross annual revenue for its preceding fiscal year. The Bureau is seeking SBA approval for its alternate small business size standard pursuant to the Small Business Act.[8]

*Data to be collected and reported.* The Bureau's proposal addresses the data points that must be collected and reported by covered financial institutions for covered applications from small businesses. Many of the proposed data points are specifically enumerated in section 1071; for the others, the Bureau is proposing to use the authority granted by section 1071 to require financial institutions to collect and report any additional data that the Bureau determines would aid in fulfilling the purposes of section 1071. Certain of these data points are or could be collected from the applicant (or otherwise determined based on information provided or authorized by the applicant); other data points are based on information solely within the financial institution's control. The Bureau is proposing that covered financial institutions maintain procedures to collect applicant-provided data at a time and in a manner that is reasonably designed to obtain a response. The Bureau's proposal also addresses what financial institutions should do if, despite having such procedures in place, they are unable to obtain certain data from an applicant. A financial institution would be permitted to rely on statements made by an

[4] For purposes of this notice of proposed rulemaking, the Bureau is using the term depository institution to mean any bank or savings association defined by the Federal Deposit Insurance Act, 12 U.S.C. 1813(c)(1), or credit union defined pursuant to the Federal Credit Union Act, 12 U.S.C. 1751 *et seq.,* as implemented by 12 CFR 700.2. The Bureau notes that the Dodd-Frank Act defines a depository institution to mean any bank or savings association defined by the Federal Deposit Insurance Act, 12 U.S.C. 1811 *et seq.;* there, that term does not encompass credit unions. 12 U.S.C. 5301(18)(A), 1813(c)(1). To facilitate analysis and discussion, the Bureau is referring to banks and savings associations together with credit unions as depository institutions throughout this notice, unless otherwise specified.

[5] The Bureau's rules, including this proposed rule to implement section 1071, generally do not apply to motor vehicle dealers, as defined in section 1029(f)(2) of the Dodd-Frank Act, that are predominantly engaged in the sale and servicing of motor vehicles, the leasing and servicing of motor vehicles, or both. 12 U.S.C. 5519.

[6] 12 U.S.C. 2801 *et seq.*

[7] 15 U.S.C. 631 *et seq.*

[8] *See* 15 U.S.C. 632(a)(2)(C).

applicant (whether in writing or orally) or information provided by an applicant when collecting and reporting 1071 data, although for most data points if the financial institution verifies the information provided it must report the verified information. The Bureau's proposal would also permit financial institutions to reuse certain previously collected data in certain circumstances.

As noted above, the Bureau's proposal includes certain data points that are, or could be, provided by the applicant. Some data points specifically relate to the credit being applied for: The credit type (which includes information on the credit product, types of guarantees, and loan term); The credit purpose; and the amount applied for. There are also data points that relate to the applicant's business: A census tract based on an address or location provided by the applicant; gross annual revenue for the applicant's preceding full fiscal year; the 6-digit North American Industry Classification System (NAICS) code appropriate for the applicant; the number of workers that the applicant has (*i.e.,* non-owners working for the applicant); the applicant's time in business; and the number of principal owners of the applicant.

There are also data points that would be provided by the applicant addressing the demographics of the applicant's ownership: Whether the applicant is a minority-owned business; whether the applicant is a women-owned business; and the ethnicity, race, and sex of the applicant's principal owners. The Bureau refers to these data points collectively as an applicant's ''protected demographic information.'' The Bureau is proposing that principal owners' ethnicity and race be collected from applicants using aggregate categories as well as disaggregated subcategories. The Bureau is proposing to permit principal owners to self-describe their sex (instead of or in addition to choosing male and/or female), and is seeking comment on whether and, if so, how its collection of principal owners' sex should incorporate sexual orientation and gender identity in light of the recent Supreme Court decision in *Bostock* v. *Clayton County* [9] and the Bureau's subsequent ECOA interpretive rule.[10] If an applicant does not provide any ethnicity, race, or sex information for any principal owners, the Bureau is proposing that the financial institution must collect at least one principal owner's race and ethnicity (but not sex) via visual observation or surname, but only if the financial institution meets with any principal owners in person or via electronic media with an enabled video component. The Bureau is proposing detailed instructions to assist financial institutions in collecting and reporting applicants' protected demographic information pursuant to section 1071. The Bureau is also proposing a sample data collection form, which would include a required notice to applicants that the financial institution cannot discriminate on the basis of an applicant's minority- or women-owned business status or any principal owner's ethnicity, race, or sex.

In addition, the Bureau's proposal includes data points that would be generated or supplied solely by the financial institution. These data points include, for all applications: A unique identifier for each application for or extension of credit; the application date; the application method (*i.e.,* the means by which the applicant submitted its application); the application recipient (that is, whether the financial institution or its affiliate received the application directly, or whether it was received by the financial institution via a third party); the action taken by the financial institution on the application; and the action taken date. For denied applications, there is also a data point for denial reasons. For applications that are originated or approved but not accepted, there is a data point for the amount originated or approved, and a data point for pricing information (which would include, as applicable, interest rate, total origination charges, broker fees, initial annual charges, additional cost for merchant cash advances or other sales-based financing, and prepayment penalties).

*Firewall.* The Bureau's proposal includes a section to implement the requirement in section 1071 that certain data collected be shielded from underwriters and certain other persons; the Bureau refers to this as the ''firewall.'' An employee or officer of a financial institution or a financial institution's affiliate that is involved in making any determination concerning the application would be prohibited from accessing an applicant's responses to inquiries that the financial institution makes pursuant to section 1071 regarding whether the applicant is a minority-owned or women-owned business, and the ethnicity, race, and sex of the applicant's principal owners.

This prohibition would not apply to an employee or officer, however, if the financial institution determines that it is not feasible to limit that employee's or officer's access to an applicant's responses to the financial institution's inquiries regarding the applicant's protected demographic information, and the financial institution provides a notice to the applicant regarding that access. It would not be feasible to limit access if the financial institution determines that an employee or officer involved in making any determination concerning a covered application should have access to one or more applicants' responses to inquiries regarding protected demographic information. The notice must be provided to each applicant whose information will be accessed or, alternatively, the financial institution could provide the notice to all applicants whose information could be accessed. The Bureau is proposing sample language that a financial institution could use in providing this notice.

*Reporting data to the Bureau; publication of data by the Bureau; and privacy considerations.* The Bureau is proposing to require that 1071 data be collected on a calendar year basis and reported to the Bureau on or before June 1 of the following year. Financial institutions reporting data to the Bureau would be required to provide certain identifying information about themselves as part of their submission. The Bureau is proposing to provide technical instructions for the submission of 1071 data in a *Filing Instructions Guide* and related materials.

The Bureau is proposing to make available to the public, on an annual basis and on the Bureau's website, the data submitted to it by financial institutions, subject to modifications or deletions made by the Bureau, at its discretion, to protect privacy interests. To determine whether and how the Bureau might use its discretion to modify or delete data prior to publication, the Bureau is proposing a ''balancing test'' that would assess the risks and benefits of public disclosure. After the Bureau receives at least one full year of 1071 data following the compliance date of the final rule, the Bureau plans to issue a policy statement in which it would set forth its intended modifications and deletions. The Bureau is also proposing that the Bureau's publication of the data would satisfy financial institutions' statutory obligation to make data available to the public upon request.

*Recordkeeping, enforcement, severability, and effective and compliance dates.* The Bureau's proposal addresses issues related to recordkeeping and to severability of the rule. It also addresses enforcement of violations of the rule, along with provisions regarding bona fide errors

[9] 140 S. Ct. 1731 (2020).

[10] 86 FR 14363 (Mar. 16, 2021).

under the rule as well as several safe harbors.

Finally, the Bureau is proposing that its final rule to implement section 1071 would become effective 90 days after publication in the **Federal Register**, though compliance with the rule would not be required until approximately 18 months after publication in the **Federal Register**. The Bureau is also proposing several related transitional provisions that would permit covered financial institutions to begin collecting applicants' protected demographic information prior to the compliance date and would permit financial institutions to use a different time period to determine whether they will be covered by the rule as of the compliance date.

## II. Background

As discussed above, in 2010, Congress enacted the Dodd-Frank Act. Section 1071 of the Dodd-Frank Act, which amended ECOA, requires financial institutions to collect and report to the Bureau data regarding applications for credit for women-owned, minority-owned, and small businesses. Section 1071 was adopted for the dual purposes of facilitating fair lending enforcement and enabling communities, governmental entities, and creditors to identify business and community development needs and opportunities of such businesses. Section 1071 complements other Federal efforts to ensure fair lending and to promote community development for small businesses, including through ECOA, the Community Reinvestment Act of 1977 (CRA),[11] and the Community Development Financial Institutions (CDFI) Fund.[12]

The collection and subsequent publication of more robust and granular data regarding credit applications for small businesses, including those that are women- and minority-owned, will provide much-needed transparency to the small business lending market. The current COVID–19 pandemic has shown that transparency is essential, particularly at a time of crisis, when small businesses, especially those owned by women and minorities, may be in urgent need of credit in order to recover from economic shocks.

Furthermore, in the years and decades to come, the collection and publication of these data will be helpful in identifying potential fair lending violations and in facilitating the enforcement of anti-discrimination laws. It will also help governments, community groups, financial institutions, and other stakeholders to identify opportunities and gaps in the market, thereby enhancing business and community development and boosting broad-based economic activity and growth.

*Overview*

Small businesses are a cornerstone of the U.S. economy. There were over 30 million small businesses in the U.S. in 2017, employing almost half of all private sector employees.[13] Small businesses, particularly start-ups, also generated 65 percent of new jobs since 2000.[14] Small businesses were hit hard by two major shocks in the last two decades. First, the Great Recession, which began in 2007, disproportionately affected small businesses.[15] Between 2007 and 2009, employment at businesses with under 50 employees fell by 10.4 percent, compared with 7.5 percent at larger firms,[16] while between 2008 and 2011 lending to small firms fell by 18 percent, compared with 9 percent at larger firms.[17] Small businesses suffered again because of the COVID–19 pandemic. Around 40 percent of small businesses were temporarily closed in late March and early April 2020, due primarily to demand shocks and employee health concerns.[18] Across the first year of the pandemic, ''excess'' business establishment exits from the market, in comparison to exits over the same period from prior years, numbered up to 200,000.[19] As of mid-2021, loan approvals (other than for government emergency programs) still remained low, and some 845,000 non-farm private sector jobs had not yet been recovered.[20]

During the last two decades, the small business lending landscape has also transformed. Traditional providers—namely banks—consolidated, leading to branch closures. The number of banks in the U.S. has declined from over 18,000 in 1986 to under 5,200 today and the number of branches declined by 14 percent from 2009 to 2020.[21] Meanwhile, new providers and products, such as fintechs and merchant cash advances (MCAs), have become increasingly prevalent in the small business lending market. Financing by MCA providers is estimated to have increased from $8.6 billion in volume during 2014 to $15.3 billion in 2017.[22] From 2017 to 2019, the volume may

[11] 12 U.S.C. 2901 *et seq.*

[12] The Riegle Community Development Banking and Financial Institutions Act of 1994, 12 U.S.C. 4701 *et seq.,* authorized the Community Development Financial Institution Fund (CDFI Fund). The CDFI Fund is discussed in more detail in part II.F.2.ii below.

[13] Off. of Advocacy, Small Bus. Admin., *2020 Small Business Profile* (May 2020), *https://cdn.advocacy.sba.gov/content/uploads/2020/06/04144214/2020-Small-Business-Economic-Profile-States-Territories.pdf* (estimating 31.7 million small businesses in the United States).

[14] Off. of Advocacy, Small Bus. Admin., *Frequently Asked Questions About Small Business,* at 1 (Oct. 2020), *https://cdn.advocacy.sba.gov/wp-content/uploads/2020/11/05122043/Small-Business-FAQ–2020.pdf* (SBA OA 2020 FAQs) (small businesses accounted for 65.1 percent of new jobs since 2000). *See generally* Congressional Research Serv., *Small Business Administration and Job Creation* (updated June 23, 2021), *https://fas.org/sgp/crs/misc/R41523.pdf (discussing small business job creation); Jon Haltiwanger et al., Who Creates Jobs? Small Versus Large Versus Young, 95 Rev. Econ. Stat. 347, 347–48 (May 2013), https://direct.mit.edu/rest/article/95/2/347/58100/Who-Creates-Jobs-Small-versus-Large-versus-Young (finding that young firms, which are generally small, contribute disproportionately to both gross and net job creation).*

[15] Jason Dietrich *et al.,* Bureau of Consumer Fin. Prot., *Data Point: Small Business Lending and the Great Recession,* at 9 (Jan. 23, 2020), *https://files.consumerfinance.gov/f/documents/cfpb_data-point_small-business-lending-great-recession.pdf* (finding that small business lending fell sharply during the Great Recession and recovered slowly, still not reaching pre-Recession levels by 2017).

[16] Ayşegül Şahin *et al.,* Fed. Reserve Bank of N.Y., Current Issues in Economics & Finance, *Why Small Businesses Were Hit Harder by the Recent Recession,* at 1 (Vol. 17, No. 4, 2011), *https://www.newyorkfed.org////_issues/ci17-4.pdf.*

[17] Rebel A. Cole, Off. of Advocacy, Small Bus. Admin, *How Did the Financial Crisis Affect Small Business Lending in the United States?,* at 2 (Nov. 2012), *https://www.microbiz.org/content/ploads//04/SmallBizLending-and-FiscalCrisis.pdf.*

[18] Alexander W. Bartik *et al., The Impact of COVID–19 on Small Business Outcomes and Expectations,* 117 Proc. Nat'l Acad. Sci. 17656, 17656 (July 2020), *https://www.pnas.org/content/pnas/117/30/17656.full.pdf.*

[19] Leland D. Crane *et al.,* Bd. of Governors of the Fed. Reserve Sys., Finance and Economics Discussion Series, 2020–089, *Business Exit During the COVID–19 Pandemic: Non-Traditional Measures in Historical Context,* at 4 (2020), *https://www.federalreserve.gov/econres/feds/files/2020089r1pap.pdf* (estimating excess establishment exits and analyzing other estimates of small business exits during the pandemic). The paper defines ''exit'' as permanent shutdown and calculates ''excess'' exits by comparing the number of exits during the 12-month period from March 2020 to February 2021 with previous years. *Id.* at 2–4.

[20] ADP Research Inst., *ADP National Employment Report* (May 2021), *https://adpemploymentreport.com////May-2021.aspx* (non-farm private sector jobs as of June 2021 as compared to Feb. 2020); Biz2Credit, *Biz2Credit Small Business Lending Index Finds April 2021 Non-PPP Loan Approval Rates Move Little for All Types of Lenders* (Apr. 2021), *https://www.biz2credit.com/business-lending-index/april-2021* (approvals as of May 2021).

[21] Congressional Research Serv., *Small Business Credit Markets and Selected Policy Issues,* at 6 (Aug. 20, 2019), *https://fas.org/sgp//misc/R45878.pdf* (decline since 1986); Bruce C. Mitchell *et al.,* Nat'l Cmty. Reinvestment Coal., *Relationships Matter: Small Business and Bank Branch Locations, https://ncrc.org/relationships-matter-small-business-and-bank-branch-locations/* (last visited Aug. 24, 2021) (branch closures).

[22] PYMNTS, *How Long Can MCAs Avoid the 'Loan' Label?* (Jan. 20, 2016), *https://www.pymnts.com/in-depth/2016/how-long-can-mcas-avoid-the-loan-label/.*

have increased further to $19 billion.[23] Meanwhile, financing by fintechs [24] is estimated to have increased from $1.4 billion [25] in outstanding balances in 2013 to approximately $25 billion [26] in 2019.

Both recent economic shocks and changes in patterns of small business financing have had fair lending and community development implications. In terms of the effect of economic shocks, data suggest that women-owned and minority-owned small businesses were impacted disproportionately by the economic crises of the last two decades.[27] Data further suggest that women-owned and minority-owned small businesses, compared to other small businesses, had fewer cash reserves and faced steeper hurdles in accessing credit that would have allowed them to better weather these crises.[28]

Regarding trends in the small business financing landscape, the shift away from traditional providers of small business credit toward newer types of providers gives rise to both potential harm and opportunity. In terms of potential harms, bank closures may have made it more difficult for small businesses, particularly women-owned and minority-owned small businesses, to access credit and remain open—particularly in low- and moderate-income areas and rural communities. Newer providers, often offering newer products, have less experience complying with both Federal and State lending laws and regulations. Additionally, they may use algorithms and artificial intelligence (AI), which may create or heighten ''risks of unlawful discrimination, unfair, deceptive, or abusive acts or practices . . . or privacy concerns.'' [29] In addition, opaque product terms and high interest rates could trap business owners in cycles of debt.

In terms of opportunity, innovative products and lending models, including the use of AI, may yield benefits of more accurate, lower-cost, and faster underwriting, as well as expanded credit access for small businesses that may not have obtained credit under traditional credit underwriting approaches.[30] Specifically, newer providers and approaches may permit those with low or nonexistent personal or business credit scores—including women and minorities who own or seek to start small businesses but on average have relatively lower personal credit scores than male and white business owners [31]—to more easily access credit.[32] Non-traditional credit providers may help offset decreases in lending associated with the closure of bank branches. For instance, fintechs may help provide financing to small businesses in rural communities that lack bank branches.

The precise impacts of these broader trends are not well understood at present because there are no comprehensive, comparable, and application-level data across the fragmented and complex small business lending market. Some small business lending data exist, provided mostly by Federal regulators, but available data are incomplete in certain ways. Some do not include lending by certain categories of institutions, such as smaller depository institutions. And none include lending by nondepository institutions, which comprises almost half of all small business financing.[33]

The datasets that do exist both over- and underestimate small business lending in certain respects by including small dollar loans to non-small businesses and by excluding larger loans to small businesses.[34] Further, these datasets all concern originated loans; they do not include information on applications that do not result in originated loans. Nor do they generally include borrower demographics. Other public, private, and nonprofit datasets offer only partial snapshots of particular areas of the market. Finally, much of the publicly available data are aggregated, which does not permit more granular, loan- or application-level analysis that

[23] Paul Sweeney, *Gold Rush: Merchant Cash Advances are Still Hot,* deBanked (Aug. 18, 2019), *https://debanked.com/2019/08/gold-rush-merchant-cash-advances-are-still-hot/.* Although the article does not specify one way or the other, estimates by the underlying source, Bryant Park Capital, appear to reference origination volumes rather than outstanding balances. *See* Nimayi Dixit, S&P Global Market Intelligence, *Payment Fintechs Leave Their Mark On Small Business Lending* (Aug. 28, 2018), *https://www.spglobal.com/marketintelligence/en/news-insights/research/payment-fintechs-leave-their-mark-on-small-business-lending.* Depending on credit multiplier effects, the value of annual origination volumes could be smaller or greater than outstanding balances. Without information on outstanding balances and for the purposes of calculating a market size for small business financing in 2019, the Bureau assumes in this paper a 1:1 ratio between annual origination volumes and outstanding balances for MCA products. See part II.D below for discussion of credit multiplier effects and for market size calculations for MCA and other small business financing products in 2019.

[24] Fintechs are defined as ''technology companies providing alternatives to traditional banking services, most often exclusively in an online environment,'' and may overlap in part with other categories of financial institution, such as commercial finance companies and/or providers of specialized products, including factoring and MCAs. Brett Barkley & Mark Schweitzer, *The Rise of Fintech Lending to Small Businesses: Businesses' Perspectives on Borrowing,* 17 Int'l J. Cent. Banking 35, 35–36 (Mar. 2021), *https://www.ijcb.org/journal/ijcb21q1a2.pdf.*

[25] *Id. (citing* Katie Darden *et al.,* S&P Global Market Intelligence, *2018 US Fintech Market Report,* at 5, *https://www.spglobal.com/marketintelligence/en/documents/2018-us-fintech-market-report.pdf (2018 US Fintech Market Report)). This figure annualizes $121 million in estimated 2013 quarterly originations to $484 million in annual originations and scales up to estimated outstanding balances using the ratio between the FFIEC Call Report and the CRA data discussed in part II.D below.*

[26] 2018 US Fintech Market Report at 6. This figure scales up $9.3 billion in estimated 2019 credit originations for small to medium sized enterprise (SME) borrowers to outstanding balances *using the ratio methodology discussed in part II.D below.*

[27] *See* part II.E below.

[28] *Id.*

[29] 86 FR 16837, 16839 (Mar. 31, 2021).

[30] *Id. See also* Patrice Ficklin *et al.,* Bureau of Consumer Fin. Prot., *Innovation Spotlight: Providing Adverse Action Notices When Using AI/ML Models* (July 7, 2020), *https://www.consumerfinance.gov/about-us/blog/innovation-spotlight-providing-adverse-action-notices-when-using-ai-ml-models/* (discussing potential benefits and risks from financial institutions using AI in credit underwriting and other areas).

[31] Geng Li, Bd. of Governors of the Fed. Reserve Sys., *FEDS Notes: Gender-Related Differences in Credit Use and Credit Scores* (June 22, 2018), *https://www.federalreserve.gov/econres/notes/feds-notes/gender-related-differences-in-credit-use-and-credit-scores-20180622.htm* (finding that single women on average have lower credit scores than single men); Alicia Robb, Off. of Advocacy, Small Bus. Admin., *Minority-Owned Employer Businesses and their Credit Market Experiences in 2017,* at 4 (July 22, 2020), *https://cdn.advocacy.sba.gov/wp-content/uploads/2020/07/22172533/Minority-Owned-Employer-Businesses-and-their-Credit-Market-Experiences-in-2017.pdf* (finding that Black and Hispanic small business borrowers are disproportionately denied credit or discouraged from applying for credit on the basis of their credit score).

[32] *See* Jessica Battisto *et al., Who Benefited from PPP Loans by Fintech Lenders?,* Liberty Street Economics (May 27, 2021), *https://libertystreeteconomics.newyorkfed.org/2021/05/who-received-ppp-loans-by-fintech-lenders.html (showing that fintech lenders were an important source of credit for Black owners during the COVID–19 pandemic).*

[33] The Bureau estimates that nondepository private business financing totaled approximately $550 billion out of around $1.2 trillion in total private outstanding balances in 2019 (47 percent). This $550 billion figure includes estimated financing by fintechs (around $25 billion), commercial finance companies (around $160 billion), nondepository CDFIs (around $1.5 billion), MCA providers (around $19 billion), factors (around $100 billion), equipment leasing providers (around $160 billion), nondepository mortgage lenders originating loans for 5+ unit residential developments (around $30 billion), and non-financial trade creditors (around $50 billion). There may additionally be lending by equipment and vehicle dealers originating loans in their own name that is not captured here. Public lenders include the Small Business Association (SBA), the Federal Housing Association (FHA), Fannie Mae and Freddie Mac, and the Farm Credit System (FCS), with public lending totaling around $210 billion in traditional lending programs plus $1 trillion in emergency COVID–19 SBA lending programs. See part II.D below for methodology and sources regarding market size estimates for each lending category.

[34] *See* part II.B below.

would facilitate fair lending or business and community development analysis by stakeholders other than those that collected the data. See part II.B below for a detailed discussion on existing data on small business financing.

The remainder of this part II focuses on several broad topics that explain, in more detail, the need for the small business lending data that the proposed rule to implement section 1071 would provide: (A) The role of small businesses in the U.S. economy; (B) existing data on small business financing; (C) the landscape of small business financing; (D) estimating the size of the small business financing market despite limited data; (E) the particular challenges faced by women-owned and minority-owned small businesses; and (F) the purposes and impact of section 1071.

*A. Small Businesses in the United States*

Small businesses are an important, dynamic, and widely diverse part of the U.S. economy. They are critical to employment, innovation, and economic growth and stability, both overall and specifically for minority and women entrepreneurs.

The Small Business Act, as implemented by the SBA, defines a small business using size standards that generally hinge on the average number of employees or average annual receipts of the business concern and are customized industry by industry across 1,057 6-digit North American Industry Classification System (NAICS) codes.[35] Size standards based on average number of employees are used in all industries in the manufacturing and wholesale trade sectors, as well as in certain industries across a variety of other sectors as well. Employee-based size standards range from 100 (used almost entirely in certain industries within the wholesale trade sector) to 1,000 (used in industries across a variety of sectors including, for example, petroleum refineries, automobile manufacturing, and greeting card publishers).[36] Size standards based on average annual receipts are used in nearly all other industries, and range from $1 million (used in most industries in the crop production and animal production and aquaculture subsectors) to $41.5 million (used in industries across a variety of sectors including, for example, passenger car leasing, television broadcasting, and general medical and surgical hospitals).[37]

Simpler definitions of what constitutes a small business are used in certain contexts. For example, in certain annual research releases the SBA's Office of Advocacy defines a small business as one that has fewer than 500 employees.[38] According to the Office of Advocacy, and based on this definition of a small business, there are 31.7 million such businesses in the U.S. that represent 99.9 percent of all U.S. firms and employ over 60 million Americans.[39] Six million of these small businesses have paid employees, while 25.7 million are non-employer businesses (*i.e.,* the owner(s) are the only people involved in the business).[40] From 2000 to 2019, small businesses, particularly young businesses and start-ups, created 10.5 million net new jobs in the U.S., while large businesses created 5.6 million.[41]

Nearly one third of all businesses are minority-owned and more than one third are women-owned, though minorities and women own a smaller share of employer firms. As of 2018, minorities owned over one million employer firms in the U.S. (amounting to 18.3 percent of all employer firms)[42] and, as of 2017, approximately 8.2 million non-employer firms.[43] Likewise, as of 2018, women owned about 1.1 million employer firms (19.9 percent of all employer firms)[44] and, as of 2017, approximately 10.6 million non-employer firms.[45]

Businesses are legally structured in several ways. In 2017, 87 percent of non-employer businesses were sole proprietorships, which means that the business is not distinguishable from the owner for tax and legal purposes; the owner receives profits directly but is also legally responsible for the business's obligations.[46] Seven percent of non-employer businesses were partnerships, which can be structured to limit the personal liability of some or all owners; limited partners may exchange control for limited liability, while general partners that run the business may remain personally liable.[47] Six percent of non-employer businesses were structured as corporations—4.6 percent are S-corporations and 1.5 percent are C-corporations—which are independent legal entities owned by shareholders who are not personally liable for the corporation's obligations.[48] In 2017, most small employer businesses were corporations, with 50.5 percent choosing to be S-corporations and 16.8 percent preferring C-corporation status, although sole proprietorship and partnership structures remained relatively popular at 12.9 percent and 11.8 percent respectively. By contrast, 74.2 percent of large employer businesses chose to be C-corporations, with 9.3 percent preferring a partnership structure and 8.1 percent S-corporation status.[49]

Small businesses are particularly important in specific sectors of the economy. In 2016, in the services sector, small businesses supplied 45 percent of 19.7 million healthcare and social services jobs, over 60 percent of 13.7 million accommodation and food services jobs, and over 80 percent of 6.3 million construction jobs.[50] In the same year, in manufacturing, small businesses made up 44 percent out of 11.6 million

[35] *See* Small Bus. Admin., *Table of Small Business Size Standards Matched to North American Industry Classification System Codes* (effective Aug. 19, 2019), *https://www.sba.gov/sites/default/files/2019-08/SBA%20%20%20Size%20Standards_Effective%20Aug%2019%2C%202019_Rev.pdf.*

[36] *See id.*

[37] A small number of industries use a size standard based on a metric other than average annual receipts or average number of employees. For example, the commercial banking industry (NAICS 522110) is subject to an asset-based size standard. *See id.*

[38] *See* SBA OA 2020 FAQs at 1.

[39] *See id.*

[40] *See id.*

[41] *See id.; see also Haltiwanger et al., 95 Rev. Econ. Stat. at 347–48 (finding that young firms, which are generally small, contribute disproportionately to both gross and net job creation).*

[42] *See* Press Release, U.S. Census Bureau, *Annual Business Survey Release Provides Data on Minority-Owned, Veteran-Owned and Women-Owned Businesses* (Jan. 28, 2021), *https://www.census.gov/newsroom/press-releases//business-survey.html.*

[43] Minority Bus. Dev. Agency, U.S. Dep't of Com., *The Number of Minority Nonemployer Firms Grew by Nearly 17% between 2014 and 2017* (Dec. 18, 2020), *https://www.mbda.gov/news/press-releases/2020/12/the-number-of-minority-nonemployer* (stating that the nearly 8.2 million minority non-employer firms in the U.S. generated $279.3 billion in revenues in 2017, and grew in number at four times the rate of non-minority non-employer firms between 2014 and 2017). *See also* SBA OA 2020 FAQs at 3 (showing over 7.6 million minority-owned non-employer firms as of 2016).

[44] *See* Press Release, U.S. Census Bureau, *Annual Business Survey Release Provides Data on Minority-Owned, Veteran-Owned and Women-Owned Businesses* (Jan. 28, 2021), *https://www.census.gov/newsroom/press-releases//business-survey.html.*

[45] *See* Press Release, Nat'l Women's Bus. Council, *NWBC Shares 2017 Nonemployer Statistics by Demographics Estimates for Women-Owned Businesses* (Dec. 17, 2020), *https://www.nwbc.gov/2020/12/17/nwbc-shares-2017-nonemployer-statistics-by-demographics-estimates-for-women-owned-businesses/* (also stating that these 10.6 million non-employer firms generate $286.1 billion in revenue, and that nearly half of all women-owned non-employer firms generate less than $10,000 in annual receipts, while only 0.05 percent generate $1 million or more in revenue).

[46] *See* SBA OA 2020 FAQs at 3.

[47] *Id.* at 4.

[48] *Id.*

[49] *Id.*

[50] *See* Off. of Advocacy, Small Bus. Admin., *2019 Small Business Profile* (Apr. 2019), *https://cdn.advocacy.sba.gov/wp-content/uploads/2019/04/23142719/2019-Small-Business-Profiles-US.pdf* (2019 Small Business Profile).

jobs.[51] Finally, in 2016, small family farms totaled 96 percent out of 2.2 million farms,[52] and small businesses provided over 80 percent of agriculture, forestry, and fishing and hunting jobs out of 161,000.[53] As such, the financial health of small businesses is essential to the U.S. economy, especially to the supply of critical and basic goods and services—from producing food to serving it at restaurants, and from home building to healthcare.

Small businesses have been especially hard-hit by the COVID–19 pandemic. At a low point in the pandemic in April 2020, 20 percent of self-employed workers had temporarily exited the labor market.[54] Industries in which small businesses played a large role have been particularly impacted. For example, comparing April 2020 with April 2019, employment declined by almost 50 percent in the leisure and hospitality industries (also declining by 50 percent among food services and drinking establishments within the leisure and hospitality industry), in which small businesses employ 60 percent of workers.[55]

*B. Existing Data on Small Business Lending*

While small businesses are a critical part of the U.S. economy and require financial support, it is still true, as it was in 2017 when the Bureau published its White Paper on small business lending, that it is not possible with current data to confidently answer basic questions regarding the state of small business lending. This limitation is especially the case with regard to the race, sex, and ethnicity of small business owners, applications as opposed to originations, and for small business financing products that are not currently reported in Call Report data.[56]

Data on small business lending are fragmented, incomplete, and not standardized, making it difficult to conduct meaningful comparisons across products and over time. This hinders attempts by policymakers and other stakeholders to understand the size, shape, and dynamics of the small business lending marketplace, including the interaction of supply and demand, as well as potentially problematic lending practices, gaps in the market, or trends in funding that may be holding back some communities.[57] For example, absent better data, it is hard to determine if relatively lower levels of bank loans to small businesses in the decade before the pandemic began were reflective of a net relative decline in lending to small businesses as compared to large businesses or rather a shift within small business lending from banks to alternative lenders.[58] To the extent there may have been a relative decline, it is difficult to assess if that decline affected certain types of small businesses more than others, including women-owned and minority-owned small businesses.[59]

The primary sources of information on lending by depository institutions are the Federal Financial Institutions Examination Council (FFIEC) and National Credit Union Administration (NCUA) Consolidated Reports of Condition and Income (Call Reports), as well as reporting under the CRA. Under the FFIEC and CRA reporting regimes, small loans to businesses of any size are used in whole or in part as a proxy for loans to small businesses. The FFIEC Call Report captures banks' outstanding number and amount of small loans to businesses (that is, loans originated under $1 million to businesses of any size; small loans to farms are those originated under $500,000).[60] The CRA requires banks and savings associations with assets over a specified threshold to report loans in original amounts of $1 million or less to businesses; reporters are asked to indicate whether the borrower's gross annual revenue is $1 million or less, if they have that information.[61] The NCUA Call Report captures data on all loans over $50,000 to members for commercial purposes, regardless of any indicator about the business's size.[62] There are no similar sources of information about lending to small businesses by nondepository institutions. The SBA also releases data concerning its loan programs, but these typically do not include demographic information, and this covers only a small portion of the overall small business financing market.

These public data sources provide some of the most extensive information currently available on small business lending. However, they suffer from four material limitations, namely that the data capture only parts of the market, are published at a high level of aggregation, do not permit detailed analysis across the markets, and lack standardization across different agencies.

First, these datasets exclude entire categories of lenders. For example, banks under $1.322 billion in assets do not have to report under the CRA.[63] The FFIEC and NCUA Call Reports and CRA data do not include lending by nondepository financial institutions, which the Bureau estimates to represent 40 percent of the small business financing market and is rapidly growing.[64]

[51] *Id.* at 3.

[52] Nat'l Inst. of Food & Agric., U.S. Dep't of Agric., *Family Farms, https://nifa.usda.gov/family-farms (last visited July 26, 2021)* (classifying family farms as any farm organized as a sole proprietorship, partnership, or family corporation. Family farms exclude farms organized as non-family corporations or cooperatives, as well as farms with hired managers.).

[53] 2019 Small Business Profile at 3.

[54] Daniel Wilmoth, Off. of Advocacy, Small Bus. Admin., *The Effects of the COVID–19 Pandemic on Small Businesses* (Issue Brief No. 16) (Mar. 2021), *https://cdn.advocacy.sba.gov/wp-content/uploads/2021/03/02112318/COVID-19-Impact-On-Small-Business.pdf.*

[55] *Id. By August 2021, many of these jobs had since returned as mandatory closure orders ended and the economy began to recover.*

[56] Bureau of Consumer Fin. Prot., *Key dimensions of the small business lending landscape,* at 39–40 (May 2017), *https://files.consumerfinance.gov/f/documents/201705_cfpb_Key-Dimensions-Small-Business-Lending-Landscape.pdf* (White Paper).

[57] While Call Report and CRA data provide some indication of the level of supply of small business credit, the lack of data on small business credit applications makes demand for credit by small businesses more difficult to assess, including with respect to local markets or protected classes.

[58] Rebel A. Cole, Off. of Advocacy, Small Bus. Admin., *How Did Bank Lending to Small Business in the United States Fare After the Financial Crisis?,* at 26 (Jan. 2018), *https://cdn.advocacy.sba.gov/wp-content/uploads/2019/05/09134658/439-How-Did-Bank-Lending-to-Small-Business-Fare.pdf* (showing a decline in bank loans to small businesses from 2008 to 2015 from $710 billion to $600 billion). The level of bank lending to small businesses has recovered somewhat since a trough in 2012–13 that represented the lowest amount of lending since 2005. Fed. Deposit Ins. Corp., *https://www.fdic.gov/analysis/quarterly-banking-profile/qbp/timeseries/small-business-farm-loans.xlsx* (last visited July 22, 2021).

[59] White Paper at 40.

[60] *See* Fed. Fin. Insts. Examination Council, *Reporting Forms 31, 41, and 51* (last modified Mar. 16, 2021), *https://www.ffiec.gov/ffiec_report_forms.htm* (FFIEC Call Report).

[61] *See* Fed. Fin. Insts. Examination Council, *A Guide to CRA Data Collection and Reporting,* at 11, 13 (2015), *https://www.ffiec.gov/cra/pdf/2015_CRA_Guide.pdf* (2015 FFIEC CRA Guide). Small business loans are defined for CRA purposes as loans whose original amounts are $1 million or less and that were reported on the institution's Call Report or Thrift Financial Report as either ''Loans secured by nonfarm or nonresidential real estate'' or ''Commercial and industrial loans.'' Small farm loans are defined for CRA purposes as loans whose original amounts are $500,000 or less and were reported as either ''Loans to finance agricultural production and other loans to farmers'' or ''Loans secured by farmland.'' *Id.* at 11. Beginning in 2023, national banks supervised by the OCC with assets greater than $2.5 billion will be required to report loans of $1.6 million or less and indicate whether the borrower's gross annual review is $1.6 million or less. *See* 85 FR 34734 (June 5, 2020).

[62] *See* Nat'l Credit Union Admin., *Call Report Form 5300* (June 2020), *https://www.ncua.gov/files/publications/regulations/form-5300-june-2020.pdf.*

[63] Fed. Fin. Insts. Examination Council, *Community Reinvestment Act 2021 Reporting Criteria, https://www.ffiec.gov/cra/reporter21.htm* (last visited Aug. 5, 2021).

[64] Nondepository lending is estimated to total approximately $550 billion out of $1.4 trillion in total lending, excluding $1 trillion in COVID–19 emergency program lending. *See* part II.D below

Second, Federal agencies publish summary data at a high level in a manner that does not facilitate independent analysis by other agencies or stakeholders. The FFIEC and NCUA Call Reports and the CRA data are all available at a higher level of aggregation than loan-level, limiting fair lending and detailed geographic analyses since race, sex, and ethnicity as well as business location data are rarely disclosed.

Third, the detailed data collected by these Federal sources have significant limitations as well, preventing any analysis into certain issues or types of borrowers, even by the regulators possessing these data. Neither Call Report nor CRA data include applications, which limits insights into any potential discrimination or discouragement in application processes as well as into the interaction between credit supply and demand. The Call Report and CRA data separately identify loans of under $1 million in value, and CRA data also identify loans to businesses with annual revenues of $1 million or less.[65] However, the Call Report definition of small business loans as those with a loan size of $1 million or less at origination is both overinclusive, as it counts small loans to businesses of all sizes, and underinclusive, as it excludes loans over $1 million made to small businesses. Credit unions report any loans under $50,000 as consumer loans and not as commercial loans,[66] potentially excluding from measurement an important source of funding for many small businesses, particularly the smallest and often most underserved.

Finally, the Federal sources of small business lending data are not standardized across agencies and cannot be easily compared. For example, the FFIEC Call Report collects small loans to businesses as a proxy for small business lending, whereas the NCUA Call Report collects loans to members for commercial purposes above $50,000 but with no upper limit. The loan-level data for the Paycheck Protection Program (PPP) offer an unprecedented level of insight into small business lending, but this dataset is a one-off snapshot into the market for a specific lending program at an acute moment of crisis and is also limited in utility by relatively low response levels to demographic questions concerning borrowers.[67]

The Federal government also conducts and releases a variety of statistics, surveys, and research reports on small business lending through the member banks for the Federal Reserve System, the FDIC, CDFI Fund, and the U.S. Census Bureau. These data sources offer insights into broad trends and specific small business lending issues but are less useful for detailed fair lending analyses or identification of specific areas, industries, or demographic groups being underserved. Periodic changes in survey methodology and questions can also limit comparability and the ability to track developments over time.

There are also a variety of non-governmental data sources, issued by both private and nonprofit entities, that cover small businesses and/or the small business financing market. These include datasets and surveys published by commercial data and analytics firms, credit reporting agencies, trade associations, community groups, and academic institutions. Certain of these data sources are publicly available and track specific topics, such as small business optimism,[68] small business employment,[69] rates of small business credit application approvals,[70] small business lending and delinquency levels,[71] and rates of small business closure.[72] Other databases have more granularity and provide detailed information on individual businesses, including revenue, credit utilization, industry, and location.[73]

While these non-public sources of data on small businesses may provide a useful supplement to existing Federal sources of small business lending data, these private and nonprofit sources often do not have lending information, may rely in places on unverified research based on public internet sources, and/or narrowly limit use cases for parties accessing data. Further, commercial datasets are generally not free to public users and can be costly, raising equity issues for stakeholders who cannot afford access.

### *C. The Landscape of Small Business Finance*

Notwithstanding the lack of data on the market, it is clear that financing plays an important role in enabling small businesses to grow and contribute to the economy. When it is available, financing not only provides resources for small businesses to smooth cash flows for current operations, but also affords business owners the opportunity to invest in business growth. An analysis by the National Small Business Association, which examined data from 1993 through 2016, found a correlation between small business owners' ability to access credit and their ability to hire.[74] This same study found that, while not the sole cause, the inability to secure financing may have led 16 percent of small businesses to reduce their number of employees and approximately 10 percent of small businesses to reduce employee benefits. Lack of access to financing also contributed to a further 10 percent of small businesses being unable to increase store inventory in order to meet existing demand.[75]

To support their growth or to make it through harder times, small businesses look to a variety of funding sources. Especially when starting out, entrepreneurs often rely on their own

(providing a detailed breakdown and methodology of estimates across lending products).

[65] Fed. Fin. Insts. Examination Council, *Schedule RC–C, Part II Loans to Small Businesses and Farms,* at 1, *https://www.fdic.gov/regulations/resources/call/crinst-031-041/2017/2017-03-rc-c2.pdf* (detailing the Call Report loan size threshold of $1 million at origination for loans to small businesses); 2015 FFIEC CRA Guide at 11 (detailing the CRA size thresholds of $1 million both for loan amount at origination and for revenue of small business borrowers).

[66] Nat'l Credit Union Admin., *Call Report Form 5300 Instructions,* at 26 (effective Mar. 31, 2021), *https://www.ncua.gov/files/publications/regulations/call-report-instructions-march-2021.pdf.*

[67] Zachary Warmbrodt, *Tracking the Money: Bid to Make Business Rescue More Inclusive Undercut by Lack of Data,* Politico (Mar. 2, 2021), *https://www.politico.com/news/2021/03/02/businesses-inclusive-coronavirus-relief-money-data-472539* (reporting that 75 percent of PPP recipients did not report their ethnicity and 58 percent did not reveal their gender).

[68] Nat'l Fed'n of Indep. Bus., *Small Business Optimism Index* (June 2021), *https://www.nfib.com/surveys/small-business-economic-trends/.*

[69] ADP, *Employment Reports, https://adpemploymentreport.com/* (last visited July 22, 2021).

[70] Biz2Credit, *Biz2Credit Small Business Lending Index, https://www.biz2credit.com/small-business-lending-index* (last visited July 27, 2021).

[71] PayNet, *Small Business Lending Index, https://sbinsights.paynetonline.com/lending-activity/* (last visited July 27, 2021).

[72] Opportunity Insights Economic Tracker, *https://tracktherecovery.org/* (last visited July 27, 2021). The Opportunity Insights Economic Tracker and similar data sources may materially overestimate the number of business closures by not controlling for attrition in the small business client base of data providers. *See* Leland D. Crane *et al.,* Bd. of Governors of the Fed. Reserve Sys., Finance and Economics Discussion Series, 2020–089, *Business Exit During the COVID–19 Pandemic: Non-Traditional Measures in Historical Context,* at 21–22 (2020), *https://www.federalreserve.gov/econrest/feds/files2020089r1pap.pdf.*

[73] *See, e.g.,* Dun & Bradstreet, *https://www.dnb.com/* (data provider and credit reporter); Data Axle, *https://www.data-axle.com/* (data provider); Equifax, *https://www.equifax.com/business/business-credit-reports/* (credit reporter); Experian, *https://www.experian.com/small-business/business-credit-reports* (credit reporter).

[74] Nat'l Small Bus. Ass'n, *2016 Year-End Economic Report* (July 2017), *https://www.nsba.biz/wp-content/uploads/2017/02/Year-End-Economic-Report-2016.pdf.*

[75] *Id.*

savings and help from family and friends. If a business generates a profit, its owners may decide to reinvest retained earnings to fund further growth. However, for many aspiring business owners—and their personal networks—savings and retained earnings may not be sufficient to fund a new venture or grow it, leading owners to seek other sources of funding. This is particularly true for minority- and women-led households, which on average have less wealth than their white- and men-led counterparts.[76]

One such source of funding comes from others besides family and friends, whether high net worth individuals or ''angel investors,'' venture capital funds, or, in a more recent development usually facilitated by online platforms, via crowdsourcing from retail investors. Often, these early investments take the form of equity funding, which business owners are not obligated to repay to investors. However, equity funding requires giving up some ownership and control to investors, which certain entrepreneurs may not wish to do. For small businesses, equity funding also tends to be somewhat more expensive than debt financing in the longer run. This is for a number of reasons, including that loan interest payments, unlike capital gains, are tax-deductible.[77] Finally, equity investments from others besides family and friends are available to only a minority of small businesses.

Many small businesses instead seek debt financing from a wide range of providers. These providers include depository institutions, such as banks, savings associations, and credit unions,[78] as well as fintechs and commercial finance companies, specialized providers of specific financing products, and a range of government and government-sponsored enterprises, among others.

In the past, small businesses principally sought credit from banks; however, as banks have merged and consolidated, particularly in the wake of the Great Recession, they have provided less financing to small businesses.[79] As noted earlier, the number of banks has declined significantly since a post-Great Depression peak in 1986 of over 18,000 institutions to around 5,200 institutions today,[80] while 13,500 branches closed from 2009 to mid-2020, representing a 14 percent decrease.[81] Although nearly half of counties either gained bank branches or retained the same number between 2012 and 2017, the majority lost branches over this period.[82] Out of 44 counties that were deeply affected by branch closures, defined as having 10 or fewer branches in 2012 and seeing five or more of those close by 2017, 39 were rural counties.[83] Of rural counties, just over 40 percent lost bank branches in that period; the rural counties that experienced substantial declines in bank branches tend to be lower-income and with a higher proportion of African-American residents relative to other rural counties,[84] raising concerns about equal access to credit.

As banks and branches have merged and/or closed, the share of banking assets has also become increasingly concentrated in the largest institutions, with banks of over $10 billion in assets representing 84 percent of all industry assets in 2018,[85] totaling $15.1 out of $17.9 trillion.[86] Nevertheless, banks of under $10 billion in assets continue to hold approximately half of all small business loans (using the FFIEC Call Report definition of loans of under $1 million), highlighting the importance of smaller banks to the small business lending market.[87] Since smaller bank credit approvals have traditionally been close to 50 percent, while large banks approve only 25–30 percent of applications, bank consolidation may have implications for small business credit access.[88] Since institutions under $1.322 billion in assets are not required to report on lending under the CRA,[89] it is difficult to precisely assess the

[76] Emily Moss *et al., The Black-White Wealth Gap Left Black Households More Vulnerable,* Brookings Inst. (Dec. 8, 2020), *https://www.brookings.edu/blog/up-front/2020/12/08/the-black-white-wealth-gap-left-black-households-more-vulnerable/* (detailing wealth gaps in 2019 by race and sex that show white male households with more wealth than white female or Black male or female households at all age brackets). *See also* Erin Ruel & Robert Hauser, *Explaining the Gender Wealth Gap,* 50 Demography 1155, 1165 (Dec. 2012), *https://read.dukeupress.edu/demography/article/50/4/1155/169553/Explaining-the-Gender-Wealth-Gap* (finding a gender wealth gap of over $100,000 in a longitudinal study over 50 years of a single age cohort in Wisconsin); Neil Bhutta *et al.,* Bd. of Governors of the Fed. Reserve Sys., *Disparities in Wealth by Race and Ethnicity in the 2019 Survey of Consumer Finances* (Sept. 28, 2020), *https://www.federalreserve.gov/econres/notes/feds-notes/disparities-in-wealth-by-race-and-ethnicity-in-the-2019-survey-of-consumer-finances-20200928.htm* (finding median white family wealth in 2019 of $188,200 compared with $24,100 for Black families and $36,100 for Hispanic families).

[77] Jim Woodruff, *The Advantages and Disadvantages of Debt and Equity Financing,* CHRON (updated Mar. 4, 2019), *https://smallbusiness.chron.com/advantages-disadvantages-debt-equity-financing-55504.html.*

[78] For purposes of this notice of proposed rulemaking, the Bureau is using the term depository institution to mean any bank or savings association defined by section 3(c)(1) of the Federal Deposit Insurance Act, 12 U.S.C. 1813(c)(1), or credit union defined pursuant to the Federal Credit Union Act, as implemented by 12 CFR 700.2. The Bureau notes that the Dodd-Frank Act defines a depository institution to mean any bank or savings association defined by the Federal Deposit Insurance Act; there, that term does not encompass credit unions. 12 U.S.C. 5301(18)(A), 1813(c)(1). The Bureau is referring to banks and savings associations together with credit unions as depository institutions throughout this notice, unless otherwise specified, to facilitate analysis and discussion.

[79] Rebel A. Cole, Off. of Advocacy, Small Bus. Admin., *How Did Bank Lending to Small Business in the United States Fare After the Financial Crisis?,* at 26 (Jan. 2018), *https://cdn.advocacy.sba.gov/wp-content/uploads/2019/05/09134658/439-How-Did-Bank-Lending-to-Small-Business-Fare.pdf* (showing a decline in bank loans to small businesses from 2008 to 2015 from $710 billion to $600 billion). The level of bank lending to small businesses has recovered somewhat since a trough in 2012–13 that represented the lowest amount of lending since 2005. Fed. Deposit Ins. Corp., *https://www.fdic.gov/analysis/quarterly-banking-profile/qbp/timeseries/small-business-farm-loans.xlsx* (last visited July 22, 2021).

[80] Congressional Research Serv., *Small Business Credit Markets and Selected Policy Issues,* at 6 (Aug. 20, 2019), *https://fas.org/sgp/crs/misc/R45878.pdf.*

[81] Bruce C. Mitchell *et al.,* Nat'l Cmty. Reinvestment Coal., *Relationships Matter: Small Business and Bank Branch Locations,* at 6 (2020), *https://ncrc.org/relationships-matter-small-business-and-bank-branch-locations/* (stating that in 2009 there were 95,596 brick and mortar full-service branches or retail locations but, as of June 30, 2020, that number had fallen to 82,086).

[82] Bd. of Governors of the Fed. Reserve Sys., *Perspectives from Main Street: Bank Branch Access in Rural Communities,* at 1, 3–4, 19 (Nov. 2019), *https://www.federalreserve.gov/publications/files/bank-branch-access-in-rural-communities.pdf.*

[83] *Id.*

[84] *Id.*

[85] Congressional Research Serv., *Small Business Credit Markets and Selected Policy Issues,* at 6 (Aug. 20, 2019), *https://fas.org/sgp/crs/misc/R45878.pdf.*

[86] Fed. Deposit Ins. Corp., *Bank Data and Statistics, https://www.fdic.gov/bank/statistical/* (last visited Aug. 22, 2021).

[87] Speech by Board Governor Lael Brainard: *Community Banks, Small Business Credit, and Online Lending* (Sept. 30, 2015), *https://www.federalreserve.gov/newsevents/speech/brainard20150930a.htm.* Banks with under $10 billion in assets are often referred to as ''community banks.'' Congressional Research Serv., *Over the Line: Asset Thresholds in Bank Regulation,* at 2–3 (May 3, 2021), *https://fas.org/sgp/crs/misc/R46779.pdf* (noting that the Board of Governors of the Federal Reserve System (Board) and the Office of the Comptroller of the Currency (OCC) define community banks as having under $10 billion in assets, although there may be other criteria, with the FDIC considering also geographic footprint and a relative emphasis on making loans and taking deposits as opposed to engaging in securities and derivatives trading). Community banks are also more likely to engage in relationship-based lending. *See id.* at 3.

[88] Biz2Credit, *Biz2Credit Small Business Lending Index, https://www.biz2credit.com/small-business-lending-index* (last visited July 22, 2021). These historical approval rates are reflected in pre-pandemic Small Business Lending Index releases by Biz2Credit. *See, e.g.,* Biz2Credit, *Small Business Loan Approval Rates at Big Banks Remain at Record High in February 2020: Biz2Credit Small Business Lending Index, https://www.biz2credit.com/small-business-lending-index/february-2020* (last visited July 29, 2021) (showing large bank approvals of 28.3 percent in February 2020 and of 27.2 percent in February 2019 and smaller bank approvals of 50.3 percent in February 2020 and of 48.6 percent in February 2019).

[89] *See* part II.B above.

impact of bank consolidation and shuttered branches on small business lending and access to credit in local areas.[90] By contrast, credit unions increased their small business lending from $30 billion in 2008 to at least $55 billion in 2019.[91] Like banks, credit unions typically receive high satisfaction scores among small business borrowers, reflecting more high-contact, relationship-based lending models.[92]

Certain banks and credit unions choose to be mission-based lenders, as CDFIs or Minority Depository Institutions (MDIs).[93] Mission-based lenders focus on providing credit to traditionally underserved and low-income communities and individuals to promote community development and expand economic opportunity, making them a relatively smaller by dollar value but essential part of the small business lending market. There were over 1,200 CDFIs (around half of which are depository institutions) as of May 2021 and over 140 MDIs as of March 2021.[94]

During a period in which that depository institutions have been providing relatively less funding to small businesses,[95] small businesses have increasingly relied on other nondepository institutions for financing. Since nondepositories typically do not report their small business financing activities to regulators, however, there are no authoritative sources for either the number of such entities or the dollar value of financing they provide to small businesses.[96] However, what data are available make clear that fintech firms are rapidly increasing their share of the small business financing market.[97]

Whether depository or nondepository, each provider of small business financing assesses a variety of different criteria to determine whether and on what terms to grant an extension of credit or other financing product, including business and financial performance, the credit history of the business and its owner(s), the time in business, and the industry, among other factors. Protections such as guarantees, collateral, and insurance can mitigate perceived risks, potentially enabling a lender to offer better terms or facilitating an extension of credit that would otherwise not meet lending limit or underwriting criteria. Often, government agencies, including the SBA, FHA, and USDA, guarantee or insure loans themselves to encourage lenders to provide credit to borrowers that may not otherwise be able to obtain credit, either on affordable terms and conditions or at all.[98] Different lenders also employ diverse methods for assessing risk, with smaller banks generally relying more on traditional underwriting methods and typically managing multi-product relationships. Fintechs increasingly use algorithms, automation, and even AI and machine learning to assess risk and make underwriting decisions, with originations typically being less relationship-based in nature.

As well as diversity in underwriting methodology and criteria, there are also considerable differences across small business financing products and providers with respect to pricing methods and repayment structures. As a result, it can be challenging to compare the competitiveness of product pricing and terms. The Bureau understands that term loans, lines of credit, and credit cards typically disclose annualized interest rates; leases often take into account depreciation; factoring products discount an invoice's value and add a fee; and MCAs apply a multiple to the value of the up-front payment.[99] Moreover, providers may add additional fees that are not standardized within industries, much less across them. The Bureau believes that this complexity may confuse business owners and render them unable to secure more favorable rates due to opacity in offers presented—which in some cases may even be deliberate [100]—and a corresponding inability to effectively compare across different financing options.[101] This may impair applicants' ability to make informed choices.

### *D. Estimating the Size and Scope of the Small Business Financing Market*

In light of the lack of data and the heterogeneity of products and providers within the small business financing market, it can be difficult to get a clear sense of the size and scope of the market. In this section, the Bureau describes its estimates of the total outstanding balances of credit in the market, the number of institutions that are active in the small business

[90] Bruce C. Mitchell *et al.,* Nat'l Cmty. Reinvestment Coal., *Relationships Matter: Small Business and Bank Branch Locations, https://ncrc.org/relationships-matter-small-business-and-bank-branch-locations/* (last visited July 27, 2021).

[91] Rebel A. Cole, Off. of Advocacy, Small Bus. Admin., *How Did Bank Lending to Small Business in the United States Fare After the Financial Crisis?,* at 26 (Jan. 2018), *https://cdn.advocacy.sba.gov/wp-content/uploads/2019/05/09134658/439-How-Did-Bank-Lending-to-Small-Business-Fare.pdf.*

[92] Fed. Reserve Banks, *Small Business Credit Survey, 2021 Report On Employer Firms* (2021), *https://www.fedsmallbusiness.org/medialibrary/FedSmallBusiness/files/2021/2021-sbcs-employer-firms-report.*

[93] According to the FDIC, FDIC-insured MDIs and CDFI banks are banks, savings banks, and savings associations (collectively, banks) that serve minority, low- or moderate-income (LMI), and rural communities at higher rates than mainstream banks. MDIs serve minority communities including African American, Asian American, Hispanic American, and Native American. CDFI banks are certified through the U.S. Department of the Treasury by demonstrating they serve LMI communities. *See, e.g.,* Fed. Deposit Ins. Corp. Minority Depository Institutions Program website, *https://www.fdic.gov/regulations/resources/minority/mission-driven/index.html* (last visited July 11, 2021).

[94] Cmty. Dev. Fin. Inst., *CDFI Certification, https://www.cdfifund.gov/programs-training/certification/cdfi* (last visited July 21, 2021); Fed. Deposit Ins. Corp., *Minority Depository Institutions Program* (last updated June 9, 2021), *https://www.fdic.gov/regulations/resources/minority/mdi.html.*

[95] *See* Rebel A. Cole, Off. of Advocacy, Small Bus. Admin., *How Did Bank Lending to Small Business in the United States Fare After the Financial Crisis?,* at 26 (Jan. 2018), *https://cdn.advocacy.sba.gov/wp-content/uploads/2019/05/09134658/439-How-Did-Bank-Lending-to-Small-Business-Fare.pdf* (showing a decline in bank loans to small businesses from 2008–15 from $710 billion to $600 billion). The level of bank lending to small businesses has recovered somewhat since a trough in 2012–13 that represented the lowest amount of lending since 2005. *See also* Fed. Deposit Ins. Corp., *https://www.fdic.gov/analysis/quarterly-banking-profile/qbp/timeseries/small-business-farm-loans.xlsx* (last visited July 21, 2021) (tabulating outstanding balances for credit extended to small- and non-small business lending by banks and thrifts over time).

[96] *See* part II.B above.

[97] *See* part II.D below.

[98] Congressional Research Serv., *Small Business Administration 7(a) Loan Guaranty Program* (updated June 21, 2021), *https://fas.org/sgp/crs/misc/R41146.pdf* (discussing the SBA's flagship 7(a) loan guarantee program); U.S. Dep't of Hous. & Urban Dev., *Descriptions Of Multifamily Programs, https://www.hud.gov/program_offices/housing/mfh/progdesc* (last visited July 27, 2021) (listing FHA mortgage insurance programs for 5+ unit residential developments); Farm Serv. Agency, U.S. Dep't of Agric., *Guaranteed Loan Program Fact Sheet* (Mar. 2020), *https://www.fsa.usda.gov/Assets/USDA-FSA-Public/usdafiles/FactSheets/guaranteed_loan_program-factsheet.pdf* (discussing the USDA's Farm Service Agency guaranteed loan program).

[99] See part II.D below for definitions of the different product categories.

[100] Press Release, Fed. Trade Comm'n, *Cash Advance Firm to Pay $9.8M to Settle FTC Complaint It Overcharged Small Businesses* (Apr. 22, 2021), *https://www.ftc.gov/news-events/press-releases/2021/04/cash-advance-firm-pay-98m-settle-ftc-complaint-it-overcharged* (settling a lawsuit between the Federal Trade Commission (FTC) and an MCA provider for $9.8 million where the complaint alleged that the provider ''deceived'' and ''misle[d]'' business borrowers about the amount and terms of financing); Bd. of Governors of the Fed. Reserve Sys., *Record of Meeting: Community Advisory Council and the Board of Governors,* at 7 (Oct. 5, 2018), *https://www.federalreserve.gov/aboutthefed/files/cac-20181005.pdf* (noting a growing trend of small business owners facing difficulty with expensive loan products such as MCAs where the pricing and structure of the loans is often deliberately obscured).

[101] Fed. Trade Comm'n, *'Strictly Business' Forum, Staff Perspective,* at 5 (Feb. 2020), *https://www.ftc.gov/system/files/documents/reports/staff-perspective-paper-ftcs-strictly-business-forum/strictly_business_forum_staff_perspective.pdf* (discussing the difficulty in comparing across financing products with widely differing methods for calculating and describing key features).

financing market, and how the Bureau arrived at these estimates. Where possible, the Bureau tries to estimate the state of the small business financing market at the end of 2019 in order to estimate the state of the market during a year unaffected by the COVID–19 pandemic.

One challenge is that some of the data report the dollar value of originations and some report outstanding balances. For the purposes of this exercise and for most, but not all, products, the Bureau assumes that for every $1 originated in the market in a given year, there is approximately a corresponding $3 of outstanding balances. This assumption is based on the ratio of the 2019 FFIEC Call Report data, which totaled $721 billion in outstanding balances on bank loans to small businesses and small farms, and the 2019 CRA data, which recorded $264 billion in bank loan originations to small businesses and small farms.[102] This assumption is limited by the extent to which other small business financing products differ from loans and lines of credit, which make up the majority of financing products captured by the FFIEC Call Report data and the CRA data.[103]

As detailed in this section, the Bureau estimates that the market for small business financing products totaled $1.4 trillion in outstanding balances in 2019. The Bureau estimates that small business financing by depository institutions makes up just over half of small business financing by private institutions. In 2020 and 2021, COVID–19 emergency lending programs added a further $1 trillion to this value, bringing the overall size of the small business financing market up to $2.4 trillion. Below, the Bureau estimates the market share for different small business financing products.

Since the available data regarding depository institutions' small loans to businesses address term loans, lines of credit, and credit cards together, the respective share of different products in the overall small business financing market is difficult to assess. As detailed in this section, the Bureau estimates that together, private term loans and lines of credit constitute the largest small business credit product by value, totaling approximately $770 billion in outstanding balances in 2019, although PPP and EIDL Program loans have since added $1 trillion to this figure.

Lending by banks, saving associations, and credit unions comprises the largest part of this total amount for private term loans and lines of credit. Using FFIEC Call Report data for December 2019, the Bureau estimates that banks and savings associations account for a total of about $721 billion in outstanding credit to small businesses and small farms as of December 2019.[104] Using NCUA Call Report data for December 2019, the Bureau estimates that credit unions account for a total of about $55 billion in outstanding credit to members for commercial purposes.[105] From this value, the Bureau subtracts $62 billion in credit card lending to arrive at $713 billion in outstanding balances for term loans and lines of credit. From this value, the Bureau further subtracts $134 billion in SBA guaranteed loans to arrive at $580 billion in outstanding balances for private term loans and lines of credit extended by depository institutions (*i.e.,* banks, savings associations, and credit unions) as of December 2019.

The remaining $190 billion in outstanding balances for private term loans and lines of credit was extended by various nondepository institutions, namely commercial finance companies, fintechs, and nondepository CDFIs.[106]

Commercial finance companies specialize in financing equipment and vehicle purchases. The Bureau estimates that the value of outstanding balances on credit extended by commercial finance companies totaled approximately $160 billion. Using data from the Federal Reserve Board's Finance Company Business Receivables data on owned assets as of December 2019, the Bureau estimates commercial finance companies outstanding credit for commercial purposes as the value of retail motor vehicle loans plus equipment loans and other business receivables, which totaled about $215 billion.[107] The Bureau further assumes that about 75 percent of this value, or $162 billion, can be attributed to loans to small businesses.[108]

Typical fintech providers are characterized primarily by providing banking services exclusively in an online environment.[109] The Bureau estimates that total outstanding loan balances for fintech providers reached around $25 billion in 2019. In a 2018 report, S&P Global projected that online

[102] FFIEC Call Report data records outstanding balances on loans with origination amounts less than $1 million across Commercial & Industrial, Nonfarm Nonresidential, Agricultural, and Secured by Farmland lending categories. *See* FDIC Quarterly Banking Profile Time Series, *https://www.fdic.gov/analysis/quarterly-banking-profile/qbp/timeseries/small-business-farm-loans.xlsx* (last visited August 29, 2021).

[103] FFIEC Call Report data and CRA data on small business credit products also include business credit card products, but loans and lines of credit made up $713 billion out of $775 billion in outstanding balances on bank, savings association, and credit union loans to small businesses in 2019. One important caveat to this assumption is that products with materially shorter average term lengths, for example credit cards, factoring products, and MCAs, may have an inverse ratio of originations to outstanding balances. For example, top issuers of general purpose credit cards recorded purchase volumes of two to seven times their outstanding balances in 2020. Nilson Report, Issue 1192, at 6 (Feb. 2021), *https://nilsonreport.com/publication_newsletter_archive_issue.php?issue=1192*. If business-purpose credit cards, factoring products, and MCAs behaved similarly with respect to the ratio of originations to outstanding balances, then for every $1 originated in the market in a given year, there could be a corresponding $0.14–0.50 in outstanding balances for such products ($1 divided by two to seven).

[104] Calculated from FFIEC Call Report data accessed on June 8, 2021. The Bureau notes that, as discussed in part II.B above, these estimates rely on small loans to businesses as a proxy for loans to small businesses. As such, the Bureau acknowledges that the true outstanding value of credit extended to small businesses by such institutions may be different than what is presented here. For example, the small loans to businesses proxy would overestimate the value of outstanding credit if a significant number of small loans to businesses and farms are to businesses or farms that are actually large. Alternatively, the proxy would underestimate the value of outstanding credit to small businesses if a significant number of businesses and farms that are small under the proposed rule take out loans that are larger than $1 million or $500,000, for businesses and farms, respectively.

[105] Nat'l Credit Union Admin., *2019 Call Report Quarterly Data, https://www.ncua.gov/analysis/credit-union-corporate-call-report-data/quarterly-data* (last visited Aug. 24, 2021) (2019 NCUA Call Report). The Bureau notes that, as discussed in part II.B above, credit unions only report credit transactions made to members for commercial purposes with values over $50,000. The Bureau uses this value as a proxy for small business credit. The Bureau acknowledges that the true value of small business credit extended by credit unions may be different than what is presented here. For example, this proxy may overestimate the value of outstanding small business credit because some members are taking out loans for large businesses. Alternatively, this proxy may underestimate the value of outstanding small business credit if credit unions originate a substantial number of small business loans with origination values of under $50,000. For this analysis, the Bureau includes all types of commercial loans to members except construction and development loans and multifamily residential property. This includes loans secured by farmland; loans secured by owner-occupied, non-farm, non-residential property; loans secured by non-owner occupied, non-farm, non-residential property; loans to finance agricultural production and other loans to farmers; commercial and industrial loans; unsecured commercial loans; and unsecured revolving lines of credit for commercial purposes. The Bureau does include multifamily in part VII below.

[106] There may additionally be lending by equipment and vehicle dealers originating loans in their own name that is not captured here.

[107] Bd. of Governors of the Fed. Reserve Sys., *Finance Companies—G.20* (updated July 15, 2021), *https://www.federalreserve.gov/releases/g20/hist/fc_hist_b_levels.html*. The Bureau does not include leases, since they are already counted within the product category of equipment and vehicle leasing, or wholesale loans, which it assumes are typically made to non-small businesses.

[108] This methodology is consistent with the approach taken by Gopal and Schnabl (2020).

[109] Barkley & Schweitzer, 17 Int'l J. Cent. Banking at 35–36.

platform lenders would originate about $9.3 billion in credit to small and medium enterprises in 2019.[110] Using this estimate, the Bureau scales up the value of originations to $25 billion in estimated outstanding balances, under the assumptions discussed above.[111] At the beginning of the COVID–19 pandemic and financial crisis, fintechs originated around $22 billion in PPP loans to small businesses from March to August 2020 [112] and likely continued to originate billions more during the third wave of PPP loans in 2021, which represents an almost 90 percent increase or more in outstanding balances since 2019.[113] This follows already rapid growth from $1.4 billion in estimated outstanding balances in 2013.[114]

The Bureau estimates the value of outstanding balances on credit extended by nondepository CDFIs to small business borrowers to be around $1.5 billion. Using reporting by the CDFI Fund for 2019, the Bureau scales down the outstanding balances for loan funds of $13.8 billion and for venture capital funds of $0.3 billion by the proportion of all CDFI lending attributable to business borrowers, which totaled $15.4 billion out of $141.2 billion.[115]

Categorized here separately so as to distinguish residential from non-residential loans, the Bureau estimates outstanding balances for loans on 5+ unit residential dwellings to total over $30 billion.[116] Using data from the Mortgage Bankers Association, the Bureau scales up $11 billion in 2019 annual originations on loans of under $1 million in value at origination for 5+ unit residential dwellings to $30 billion in estimated outstanding balances, using the ratio between the FFIEC Call Report and the CRA data discussed above.[117]

Also categorized separately from depository institution totals so as to distinguish private from government and government-sponsored loans, the Bureau estimates that outstanding balances for loans extended by the Small Business Administration and the Farm Credit System totaled around $200 billion in 2019.[118]

The SBA, through its traditional 7(a), 504, and microloan programs as well as the Economic Impact Disaster Loan (EIDL) program and funding for Small Business Investment Companies (SBICs), is the largest governmental lender by value, with $143.5 billion in outstanding balances at the end of fiscal 2019.[119] However, since the outbreak of the COVID–19 pandemic, SBA lending has increased in size by over $1 trillion due to the PPP, which totaled $800 billion, and the EIDL Program, which totaled $210 billion.[120]

The Farm Credit System is another important government-related part of the small business credit landscape. The Bureau estimates that Farm Credit System members had around $55 billion in outstanding balances of credit extended to small farms in 2019. Using the same small loan to farms proxy as is used in the FFIEC Call Report, the Bureau estimates credit to farms with an origination value of less than $500,000. Based on the Farm Credit System's 2019 Annual Information Statement of the Farm Credit System, the Bureau estimates that outstanding balances of such small credit to farms totaled $55 billion at the end of 2019.[121] The Bureau notes that, as with the FFIEC Call Report proxy, this number may include credit to non-small farms and may exclude larger credit transactions extended to small farms.

Mostly extended by depository institutions, the Bureau estimates that the market for small business credit cards totaled over $60 billion in outstanding balances for 2020.[122] Using data from Y–14 Form submissions to the Federal Reserve Board, the Bureau estimates the value of outstanding balances for small business credit card accounts where the loan is underwritten

[110] 2018 US Fintech Market Report at 6.

[111] The Bureau notes that this figure may underestimate the total value of fintech lending because it focuses on platform lenders and may overestimate the value of lending to small businesses because it also includes credit to medium businesses. Additionally, the Bureau notes that fintechs often offer products besides loans and lines of credit, and that there is no clear demarcation between fintech, commercial finance company, and MCA provider, limiting the precision of market size estimates. Finally, fintechs often sell loans once originated to other entities, securitize their originations, or purchase loans that banks have originated, which may further present challenges to the precision of market size estimates for this market segment.

[112] Jessica Battisto *et al., Who Benefited from PPP Loans by Fintech Lenders?,* Liberty Street Economics (May 27, 2021), *https://libertystreeteconomics.newyorkfed.org/2021/05/who-received-ppp-loans-by-fintech-lenders.html;* Small Bus. Admin., *Paycheck Protection Program (PPP) Report* (approvals through 12 p.m. EST Apr. 16, 2020), *https://www.sba.gov/sites/default/files/2020-06/PPP%20Deck%20copy-508.pdf*; Small Bus. Admin., *Paycheck Protection Program (PPP) Report* (approvals through Aug. 8, 2020), *https://www.sba.gov/sites/default/files/2020-08/PPP_Report%20-%202020-08-10-508.pdf.*

[113] Per the program's intent, many PPP loans have been forgiven since the program began, which may mean that outstanding balances on PPP loans extended by fintech providers have since declined.

[114] Barkley & Schweitzer, 17 Int'l J. Cent. Banking at 35–36 (citing 2018 US Fintech Market Report at 5). This figure annualizes $121 million in estimated 2013 quarterly originations to $484 million in annual originations and scales up to estimated outstanding balances using the ratio between the FFIEC Call Report and the CRA data discussed above.

[115] CDFI Fund, *CDFI Annual Certification and Data Collection Report (ACR): A Snapshot for Fiscal Year 2019,* at 17, 22 (Oct. 2020), *https://www.cdfifund.gov/sites/cdfi/files/2021-01/ACR-Public-Report-Final-10292020-508Compliant.pdf.* To the extent that CDFI loan funds and venture capital funds extend credit to business customers at different rates than CDFI banks and credit unions, this calculation may over- or underestimate the value of lending to small businesses by nondepository CDFIs. This figure also assumes that all CDFI lending is for small businesses.

[116] Depository institutions, discussed above, extend a sizeable proportion of loans for 5+ unit residential dwellings; both nondepository and depository institutions are included in the total for 5+ unit outstanding balances.

[117] *See* Mortg. Bankers Ass'n, *Annual Report on Multi-Family Lending—2019,* at 5 (2020), *https://www.mba.org/store/products/research/general/report/2019-annual-report-on-multifamily-lending.* This includes both private loans, estimated at around $18 billion, and loans extended by Fannie Mae, Freddie Mac, and the FHA, estimated at around $13 billion. The share of 5+ unit residential dwelling loans of all sizes extended by governmental or government-sponsored entities was 41 percent. The Bureau assumes for the purposes of this exercise that the same share is reflected in loans of under $1 million in value at origination, although arguably this share would be higher if government and government-sponsored entities are extended disproportionately smaller dollar value loans on average.

[118] The grand total for lending by government and government-sponsored entities would be approximately $210 billion, including 5+ unit residential dwelling loans extended by Fannie Mae, Freddie Mac, and the FHA, which are separately recorded within the 5+ unit residential dwelling loan product category.

[119] Small Bus. Admin., *Small Business Administration Loan Program Performance* (effective Mar. 31, 2021), *https://www.sba.gov/document/report-small-business-administration-loan-program-performance.* SBA guaranteed loans comprised $134 billion out of this total, which amount has been deducted from the totals for depository institutions to avoid double counting.

[120] Small Bus. Admin., *Paycheck Protection Program (PPP) Report* (approvals through May 31, 2021), *https://www.sba.gov/sites/default/files/2021-06/PPP_Report_Public_210531-508.pdf;* Small Bus. Admin., *Disaster Assistance Update—Nationwide COVID EIDL, Targeted EIDL Advances, Supplemental Targeted Advances* (June 3, 2021), *https://www.sba.gov/sites/default/files/2021-06/COVID-19%20EIDL%20TA%20STA_6.3.2021_Public-508.pdf;* Small Bus. Admin., *Disaster Assistance Update—Nationwide EIDL Loans* (Nov. 23, 2020), *https://www.sba.gov/sites/default/files/2021-02/EIDL%20COVID-19%20Loan%2011.23.20-508_0.pdf.*

[121] Fed. Farm Credit Banks Funding Corp., *Farm Credit 2019 Annual Information Statement of the Farm Credit System,* at 54, *https://www.farmcreditfunding.com/ffcb_live/investorResources/informationStatements.html* (last visited Aug. 13, 2021).

[122] *See* Bd. of Governors of the Fed. Reserve Sys., Report Forms FR Y–14M, *https://www.federalreserve.gov/apps/reportforms/reportdetail.aspx?sOoYJ+5BzDYnbIw+U9pka3sMtCMopzoV* (last visited July 12, 2021). The Board's data are received from bank holding companies over $50 billion in assets, which represent 70 percent of outstanding balances for consumer credit cards; the corresponding percent of balances captured for small business cards is not known, so the total small business-purpose credit card market could be substantially higher or lower. *See* Bureau of Consumer Fin. Prot., *The Consumer Credit Card Market,* at 18 (Aug. 2019), *https://files.consumerfinance.gov/f/documents/cfpb_consumer-credit-card-market-report_2019.pdf.*

with the sole proprietor or primary business owner as an applicant.[123]

Equipment and vehicle leasing, whereby businesses secure the right to possess and use a piece of equipment or vehicle for a term in return for consideration, is another important product category that is estimated to value roughly $160 billion in outstanding balances in 2019. Using data from the Equipment Leasing and Financing Foundation for 2019, the Bureau estimates the total size of the equipment and vehicle leasing market for all sized businesses in 2019 to be approximately $900 billion.[124] The Bureau further assumes that small businesses comprise around 18 percent of the total equipment and vehicle leasing market.[125]

Factoring is a similarly significant product type, estimated at around $100 billion in market size for 2019.[126] In a factoring transaction, factors purchase, at a discount, a legally enforceable claim for payment (*i.e.,* accounts receivables or invoices) for goods already supplied or services already rendered by a business for which payment has not yet been made; hence, a factor's risk related to repayment often lies with the business's customer and not the business itself. In most cases, specific companies, called factors, provide factoring products.

The market for MCAs is developing rapidly and data are even more scarce than for other segments of the small business lending market. This limits the reliability of estimates as to the MCA market's size. Based on market research conducted by Bryant Park Capital (BPC) and reported on by *deBanked.com*, the Bureau estimates the 2019 market size to be around $20 billion.[127] The MCA market is also of particular significance for smaller and traditionally underserved businesses that may not qualify for other types of credit.[128] MCAs are typically structured to provide a lump sum payment up front (a cash advance) in exchange for a share of future revenue until the advance, plus an additional amount, is repaid. Unlike the majority of other small business financing products, MCAs typically purport to be for short durations.[129] The Bureau understands that MCAs also tend to be relatively high-cost products.[130] Two States, New York and California, will soon implement laws that will require providers of ''sales-based financing,'' such as MCAs, to provide disclosures (including estimated APR) similar to those required under the Truth in Lending Act (TILA),[131] which generally only applies to consumer credit.[132]

Finally, trade credit is another significant market, which the Bureau estimates to total $51 billion in outstanding balances in 2019. Using a report by Fundbox/PYMNTS, the Bureau estimates the trade credit market size by adding the total accounts payable for businesses under $1 million in annual revenue.[133] Considering the total value of accounts payable for businesses between $1 million and $5 million would increase the market size by $88 billion.[134] Trade credit is an often informal, business-to-business transaction, usually between non-financial firms whereby suppliers allow their customers to acquire goods and/or

[123] Off. of Mgmt. & Budget, *Instructions for the Capital Assessments and Stress Testing Information Collection (Reporting Form FR–Y14M),* OMB No. 7100–0341, at 148 (Mar. 2020), *https://omb.report/icr/202101-7100-006/doc/108187801.*

[124] *See* Equip. Leasing & Fin. Found., *Horizon Report, https://www.leasefoundation.org/industry-resources/horizon-report/* (last updated Apr. 22, 2021).

[125] *See* Karen Mills, Harvard Bus. Sch., *State of Small Business Lending,* at 29 (July 2014), *https://www.hbs.edu/ris/Supplemental%20Files/15-004%20HBS%20Working%20Paper%20Chart%20Deck_47695.pdf* (estimating equipment leasing outstanding balances for small business borrowers at approximately $160 billion at Dec. 31, 2013); Monitor Daily, *SEFI Report Finds Strong Performance Despite Challenges, https://www.monitordaily.com/news-posts/sefi-report-finds-strong-performance-despite-challenges/* (last visited July 27, 2021) ($903 billion market in 2014, commensurate with an 18 percent market share for small business borrowers at the time of the Karen Mills report).

[126] *See* Secured Fin. Found., *2019 Secured Finance: Market Sizing & Impact Study Extract Report,* at 7 (June 2019), *https://www.sfnet.com/docs/default-source/data-files-and-research-documents/sfnet_market_sizing___impact_study_extract_f.pdf?sfvrsn=72eb7333_2.* This study estimated the total volume of the U.S. factoring market to be $101 billion. To the extent that factoring volumes differ from outstanding balances, the value of outstanding balances may be higher or lower than this estimate. Also, this estimate captures factoring for business borrowers of all sizes, not just small business borrowers. The Bureau assumes that most factoring is provided to small business customers.

[127] Paul Sweeney, *Gold Rush: Merchant Cash Advances are Still Hot,* deBanked (Aug. 18, 2019), *https://debanked.com/2019/08/gold-rush-merchant-cash-advances-are-still-hot/.* BPC estimates appear to reference origination volumes rather than outstanding balances. *See* Nimayi Dixit, S&P Global Market Intelligence, *Payment Fintechs Leave Their Mark On Small Business Lending* (Aug. 28, 2018), *https://www.spglobal.com/marketintelligence/en/news-insights/research/payment-fintechs-leave-their-mark-on-small-business-lending.* Depending on credit multiplier effects, the value of annual origination volumes could be smaller or greater than outstanding balances. Without information on outstanding balances and for the purposes of calculating a market size for small business financing in 2019, the Bureau assumes in this paper a 1:1 ratio between annual origination volumes and outstanding balances for MCA products. See above for discussion of credit multiplier effects.

[128] *Cf.* Barbara Lipman & Ann Marie Wiersch, Bd. of Governors of the Fed. Reserve Sys., *Uncertain Terms: What Small Business Borrowers Find When Browsing Online Lender websites,* at 3 (Dec. 2019), *https://www.federalreserve.gov/publications/files/what-small-business-borrowers-find-when-browsing-online-lender-websites.pdf* (observing that online lenders, including providers of MCA products, position themselves as offering financing to borrowers underserved by traditional lenders).

[129] *See id.* (stating that MCAs are generally repaid in three to 18 months).

[130] *Id.* (stating that annual percentage rates on MCA products can exceed 80 percent or rise to triple digits). *See also* Fed. Trade Comm'n, *'Strictly Business' Forum, Staff Perspective,* at 5 (Feb. 2020), *https://www.ftc.gov/system/files/documents/report/staff-perspective-paper-ftcs-strictly-business-forum/strickly_business__forum_staff_perspective.pdf* (observing stakeholder concern about the high-cost of MCAs that can reach triple digit annual percentage rates).

[131] 15 U.S.C. 1601 *et seq.*

[132] New York State law will require, as of January 1, 2022, that providers of ''sales-based financing'' provide disclosures to borrowers which would include calculations of an estimated annual percentage rate in accordance with the Bureau's Regulation Z, 12 CFR part 1026. *See* New York S.898, section 803(c) (signed Jan. 6, 2021) (amending S.5470–B), *https://legislation.nysenate.gov/pdf/bills/2021/s898.* Similarly, California's Department of Financial Protection and Innovation is in the process of issuing a rule to implement a California law requiring disclosures by commercial financing companies, including those providing sales-based financing. *See* 10 Cal. Code Reg. 2057(a)(22) (defining sales-based financing as ''a commercial financing transaction that is repaid by a recipient to the financer as a percentage of sales or income, in which the payment amount increases and decreases according to the volume of sales made or income received by the recipient'' and including ''a true-up mechanism''); 10 Cal. Code Reg. 2065(a)(3) and 3001 (requiring sales-based financing providers disclosure estimated annual percentage rate according to Regulation Z, 12 CFR part 1026). Under these laws, providers of commercial financing generally will be required to disclose: (1) The total amount financed, and the amount disbursed if it is different from the total amount financed; (2) the finance charge; (3) the APR (or the estimated APR for sales-based financing and factoring transactions), calculated in accordance with TILA and Regulation Z; (4) the total repayment amount; (5) the term (or the estimated term for sales-based financing) of the financing; (6) periodic payment amounts; (7) prepayment charges; (8) all other fees and charges not otherwise disclosed; and (9) any collateral requirements or security interests. *See* Cal. S.B. 1235 (Sept. 30, 2018), *https://leginfo.legislature.ca.gov/faces/billTextClient.xhtml?bill_id=201720180SB1235;* N.Y. S.B. S5470B (July 23, 2020), *https://legislation.nysenate.gov/pdf/bills/2019/S5470B.*

[133] *See Fundbox/PYMNTS.com, The Trade Credit Dilemma,* at 11 (May 2019), *https://www.pymnts.com/wp-content/uploads/2019/05/Trade-Credit-Dilemma-Report.pdf* (estimating accounts payable for businesses with revenue of under $250,000 at $6.7 billion and for businesses with revenue of $250,000 to $999,000 at $44.6 billion).

[134] *Id.* The trade credit market is estimated to total $1.6 trillion across all business sizes in the United States. In the overall $1.4 trillion market size total for all small business financing products, the Bureau has included only the trade credit market for businesses of up to $1 million in revenue for consistency with its White Paper.

services without requiring immediate payment.

The Bureau estimates that there were approximately 8,100 financial institutions extending small business financing in 2019, almost 80 percent of which were depository institutions.

Based on FFIEC Call Report data for December 2019, the Bureau estimates that about 5,100 banks and savings associations are active in the small business lending market, out of a total of about 5,200 banks and savings associations.[135] The Bureau assumes that a bank or savings association is ''active'' in the market if it reports a positive outstanding balance of small loans, lines of credit, and credit cards to businesses.

Based on the NCUA Call Report data for December 2019, the Bureau estimates that about 1,200 out of 5,300 total credit unions were active in the small business lending market.[136] The Bureau defines a credit union as ''active'' in the market if it reported a positive number of originations of loans, lines of credit, and credit cards to members for commercial purposes in 2019.

The Bureau estimates that there are about 1,800 nondepository institutions active in the small business financing market,[137] accounting for around $550 billion in outstanding credit to small businesses.

The Bureau estimates that about 300 commercial finance companies are engaged in small business lending. By searching UCC filings, Manasa Gopal and Philipp Schnabl identified almost 300 commercial finance companies, including both independent and captive finance companies, with at least 1,500 small business loans between 2006 and 2016.[138] The Bureau also estimates there to be about 30 or more fintechs currently active in the small business lending market, not including MCA providers. Using the same methodology as for commercial finance companies, Gopal and Schnabl identified 19 fintech companies.[139] The Bureau conservatively increases this estimate to 30 to account for rapid growth in the industry from 2016 to 2019.

The Bureau estimates that 340 nondepository CDFIs are engaged in small business lending. Both depository and nondepository institutions can be CDFIs. Depository CDFIs are counted in the numbers of banks, savings associations, and credit unions engaged in small business lending. According to the CDFI fund, 487 nondepository funds (*i.e.,* loan funds and venture capital funds) reported as CDFIs in 2019.[140] Of these, 340 institutions reported that business finance or commercial real estate finance were a primary or secondary line of business in 2019.[141]

The Bureau estimates that about 270 nondepository mortgage lenders participated in the credit market for 5+ unit residential dwellings in 2019 and that about 50 of these institutions extended 25 or more of these loans to small businesses. In its ''2019 Multifamily Lending Report,'' the Mortgage Bankers Association lists annual multifamily lending volumes by institution, including a distinction for loans of under $1 million in value at origination.[142] Using the same small loan to business proxy as is used in the FFIEC Call Report, the Bureau estimates the number of nondepository mortgage lenders by counting the number of institutions that appear on this list that are not depository institutions and that extended at least 50 loans in 2019. The Bureau counts institutions extending at least 50 loans of any size in order to estimate institutions extending at least 25 small loans, based on the assumption that some 50 percent of these loans may have been for values greater than $1 million.

Based on data from UCC filings collected by deBanked.com, the Bureau estimates that about 100 institutions were active in the market for providing MCA products to small businesses in 2021.[143]

The Bureau estimates the number of factors to be between 700–900 and assumes that most factors are providing financing to small business.[144]

Finally, many government agencies and government-sponsored enterprises provide or facilitate a significant proportion of small business credit. As the flagship government lender, the Small Business Administration managed in 2019 a portfolio of over $140 billion in loans to small businesses, to which it added over $1 trillion in loans extended as part of the COVID–19 emergency lending programs. Across Federal, State, and municipal governments, the Bureau estimates that there are likely over 100 government small business lending programs.[145] Additionally, the Farm Credit System reports that, as of December 2019, the Farm Credit System contains a total of 72 banks and associations.[146] The Bureau assumes that all of these Farm Credit System institutions are engaged in lending to small farms.

[135] Calculated from FFIEC Call Report data accessed on June 8, 2021.

[136] 2019 NCUA Call Report. (One hundred twelve credit unions were not federally insured as of December 2019 but are included here as depository institutions. Calculated from NCUA Call Report data accessed on June 8, 2021.)

[137] There may also be cooperative or nonprofit lenders as well as equipment and vehicle finance dealers originating in their own name that are not captured by the Bureau in these figures. For example, by searching Uniform Commercial Code (UCC) filings, Manasa Gopal and Philipp Schnabl identified 19 cooperative lenders that originated at least 1,500 loans over the period from 2006 to 2016. Manasa Gopal & Philipp Schnabl, *The Rise of Finance Companies and FinTech Lenders in Small Business Lending,* N.Y.U. Stern Sch. of Bus., at 18 (May 13, 2020), *https://ssrn.com/abstract=3600068.* Additionally, these figures do not include trade creditors, which are non-financial companies that extend credit by allowing customers a period of time in which to pay and which are much greater in number since the practice is widespread across the economy.

[138] *Id. This figure combines* 192 independent finance companies with 95 captive finance companies. Since this estimate captures only those commercial finance companies averaging at least 150 loans per year over the 2006 to 2016 period, it may exclude smaller volume lenders and should be considered conservative.

[139] *Id.* Since this estimate captures only those fintechs averaging at least 150 loans per year over the 2006 to 2016 period, it may exclude smaller volume lenders and should be considered conservative. On the other hand, since 2019, the COVID–19 economic shock may have led to some fintechs scaling back or exiting the small business financing market. *See, e.g.,* Ingrid Lunden, *Amex Acquires SoftBank-backed Kabbage After Tough 2020 for the SMB Lender,* TechCrunch (Aug. 17, 2020), *https://techcrunch.com/2020/08/17/amex-acquires-softbank-backed-kabbage-after-tough-2020-for-the-smb-lender/* (noting that Kabbage temporarily shut down credit lines to small businesses during April 2020 and then spun off its small business loan portfolio when it was subsequently acquired by American Express).

[140] CDFI Fund, *CDFI Annual Certification and Data Collection Report (ACR): A Snapshot for Fiscal Year 2019,* at 8 (Oct. 2020), *https://www.cdfifund.gov/sites/cdfi/files/2021-01/ACR-Public-Report-Final-10292020-508Compliant.pdf.*

[141] *Id.* at 15–16.

[142] *See* Mortg. Bankers Ass'n, *Annual Report on Multi-Family Lending—2019,* at 9–66 (2020), *https://www.mba.org/store/products/research/general/report/2019-annual-report-on-multifamily-lending.*

[143] deBanked, *UCC–1 and UCC–3 Filings by Merchant Cash Advance Companies & Alternative Business Lenders, https://debanked.com/merchant-cash-advance-resource/merchant-cash-advance-ucc/* (last visited July 11, 2021).

[144] *See* Secured Fin. Found., *2019 Secured Finance: Market Sizing & Impact Study Extract Report,* at 15 (June 2019), *https://www.sfnet.com/docs/default-source/data-files-and-research-documents/sfnet_market_sizing___impact_study_extract_f.pdf?sfvrsn=72eb7333_2* (estimating the number of factors at between 700 and 900).

[145] In addition to several Federal small business lending programs, States and major municipalities also often have one or more programs of their own. One State and one municipal program in each State would already total 100 government lending programs across Federal, State, and municipal governments.

[146] Fed. Farm Credit Banks Funding Corp., *Farm Credit 2019 Annual Information Statement of the Farm Credit System,* at 7 (Feb. 28, 2020), *https://www.farmcreditfunding.com/ffcb_live/serve/public/pressre/finin/.pdf?assetId=395570.* The Bureau notes that Farm Credit System banks do not report FFIEC Call Reports and are thus not counted in the number of banks and savings associations discussed above.

*E. Challenges for Women-Owned and Minority-Owned Small Businesses*

Within the context of small business financing, women-owned and minority-owned businesses often face relatively more challenges than their counterparts. Specifically, women-owned and minority-owned small businesses can be even more susceptible to the impact of economic shocks and have a harder time accessing credit to survive and thrive in better times.

Although women-owned and minority-owned businesses are found in many industry sectors, women-owned businesses are concentrated in the health care and social assistance sector, while minority-owned businesses are primarily concentrated in the service sector, the healthcare and social assistance sector, and the administrative support, waste management and remediation sectors.[147] During economic downturns, such as the Great Recession and the financial crisis resulting from the COVID–19 pandemic, women-owned and minority-owned small businesses tend to fare worse than other small businesses. Women and minority business owners have been disproportionately hurt by the COVID–19 pandemic, with rates of business ownership dropping from February to April 2020 by 41 percent, 32 percent, and 26 percent for African American, Latinx, and Asian individuals, respectively, compared with 17 percent for white individuals.[148] Female business ownership declined by 25 percent, compared with 20 percent for male ownership.[149]

Women-owned and minority-owned small businesses often have smaller cash reserves on average, leaving them less able to weather downturns and credit crunches. For example, in February 2021, 39 percent of women-owned businesses had one month or less in cash reserves, compared with 29 percent of men-owned firms.[150] And in around 90 percent of majority Black and Hispanic communities, most businesses have fewer than 14 days of cash buffer, while this is true of only 35 percent of majority white communities.[151] As a result, many small businesses, especially those owned by women and minorities, may have had a greater need for financing just as small business lenders began to approve fewer loans in response to economic uncertainty. Loan approvals at smaller banks dropped from 50 percent pre-pandemic to 12 percent in April 2020 and have settled between 18 and 19 percent since June 2020; the trend is similar for large banks, credit unions, and fintechs.[152]

The PPP—part of the Federal government's response to the pandemic—helped to keep many small businesses afloat, but a number of factors prevented minority-owned small businesses from accessing PPP loans as easily as other firms. For example, established banking relationships between applicants and lending providers were often critical to approvals in early PPP underwriting;[153] many minority-owned businesses did not have such relationships.[154] Further, many minority-owned firms are sole proprietorships and independent contractors, both of which received delayed access to PPP loans.[155] Unprofitable non-employer firms were also initially barred from receiving loans.[156] Although Black-owned firms are more likely to use fintech providers, these lenders were only belatedly allowed to disburse PPP funds.[157] However, once fintech providers were allowed to disburse PPP loans, Black borrowers in particular benefited from this access, highlighting the ability of fintech firms to reach minority-owned business borrowers.[158]

Finally, applicants whose owners belong to protected categories may have received different credit outcomes when applying for PPP loans, although limitations in demographic information for PPP loans have hindered fair lending analyses.[159]

Given the severity of the COVID–19 pandemic for small businesses generally and its potentially disproportionate impact on women-owned and minority-owned small businesses, it is essential to better understand the small business financing landscape to maintain support for this key part of the U.S. economy both during and after the pandemic.

[147] White Paper at 12, 15.

[148] Robert Fairlie, Stanford Inst. for Economic Policy Research, Working Paper No. 20–022, *The Impact of COVID–19 on Small Business Owners: Evidence of Early Stage Losses from the April 2020 Current Population Survey,* at 5 (May 2020), *https://siepr.stanford.edu/sites/default/files/publications/20-022.pdf.* The authors define the rate of business ownership as the percentage of the labor force that owns and is actively employed in a business as their main job in the survey month. *Id.* at 3. As such, the decline in business ownership could reflect owners not only exiting the labor market but also switching to a different (wage and salary) job. In many cases, these exit or switching trends were temporary reactions to public health lockdowns and have since partially reversed.

[149] *Id.* at 6, 8.

[150] Eric Groves, *Cash Strapped SMBs, While 75% Of PPP Is Still Available,* Alignable (Feb. 9, 2021), *https://www.alignable.com/forum/alignable-road-to-recovery-report-february-2021?utm_campaign=February&utm_medium=Press&utm_source=Press.*

[151] JPMorgan Chase Inst., *Place Matters: Small Business Financial Health in Urban Communities,* at 5 (Sept. 2019), *https://www.jpmorganchase.com/content/dam/jpmc/jpmorgan-chase-and-co/institute/pdf/institute-place-matters.pdf.*

[152] Biz2Credit, *Small Business Lending Index, https://www.biz2credit.com/small-business-lending-index* (last visited July 27, 2021).

[153] Sara Savat, *Who you know matters, even when applying for PPP loans,* The Source, Newsroom, Wash. Univ. in St. Louis (Feb. 15, 2021), *https://source.wustl.edu/2021/02/who-you-know-matters-even-when-applying-for-ppp-loans/* (previous lender relationship increased likelihood of obtaining a PPP loan by 57 percent). *See generally* 86 FR 7271, 7280 (Jan. 27, 2021) (noting that many banks restricted access to PPP loans to existing customers, which may run a risk of violating the ECOA and Regulation B).

[154] Claire Kramer Mills, Fed. Reserve Bank of N.Y., *Double Jeopardy: COVID–19's Concentrated Health and Wealth Effects in Black Communities,* at 6 (Aug. 2020), *https://www.newyorkfed.org/medialibrary/media/smallbusiness/DoubleJeopardy_COVID19andBlackOwned Businesses* (arguing that a lack of strong banking relationships among Black-owned firms may have led to relatively lower rates of access to PPP loans for such firms); Fed. Reserve Banks, *Small Business Credit Survey: 2021 Report on Firms Owned by People of Color,* at ii (Apr. 15, 2021), *https://www.fedsmallbusiness.org/medialibrary/FedSmallBusiness/files/2021/sbcs-report-on-firms-owned-by-people-of-color* (Small Business Credit Survey of Firms Owned by People of Color) (finding that ''firms owned by people of color tend to have weaker banking relationships'').

[155] Greg Iacurci, *Coronavirus loan program delayed for independent contractors and self-employed workers,* CNBC (Apr. 3, 2020), *https://www.cnbc.com/2020/04/03/delays-in-sba-loans-for-independent-contractors-self-employed-workers.html.*

[156] Stacy Cowley, *'It Was a Joke': Some Small Businesses Got $1 Relief Loans,* N.Y. Times (Jan. 11, 2021), *https://www.nytimes.com/2021/01/11/business/small-businesses-ppp-covid.html* (observing that sole proprietorships were initially eligible for PPP loans only if they were profitable); *see also* Stacy Cowley, *Minority Entrepreneurs Struggled to Get Small-Business Relief Loans,* N.Y. Times (Apr. 4, 2021), *https://www.nytimes.com/2021/04/04/business/ppp-loans-minority-businesses.html* (noting that sole proprietorships and independent contractor business structures are particularly prevalent among minority-owned businesses, which led to minority-owned businesses being disproportionately restricted from accessing PPP loans during initial roll-out of the program).

[157] Claire Kramer Mills, Fed. Reserve Bank of N.Y., *Double Jeopardy: COVID–19's Concentrated Health and Wealth Effects in Black Communities,* at 5–7 (Aug. 2020), *https://www.newyorkfed.org/medialibrary/media/smallbusiness/DoubleJeopardy_COVID19andBlackOwned Businesses.*

[158] Jessica Battisto *et al.,* Liberty Street Economics, Fed. Reserve Bank of N.Y., *Who Benefited from PPP Loans by Fintech Lenders?* (May 27, 2021), *https://libertystreeteconomics.newyorkfed.org/2021/05/who-benefited-from-ppp-loans-by-fintech-lenders.html.*

[159] Rocio Sanchez-Moyano, Fed. Reserve Bank of S.F., *Paycheck Protection Program Lending in the Twelfth Federal Reserve District* (Mar. 3, 2021), *https://www.frbsf.org/community-development/publications/community-development-research-briefs/2021/february/ppp-lending-12th-district/* (citing matched-pair audit studies that found discouragement and provision of incomplete information for minority business owners seeking PPP loans); 86 FR 7271, 7280 (Jan. 27, 2021) (noting that facially neutral PPP policies such as limiting loans to businesses with pre-existing relationships may run a risk of violating the ECOA and Regulation B due to a disproportionate impact on a prohibited basis).

*F. The Purposes and Impact of Section 1071*

The Dodd-Frank Act sets forth the Bureau's purposes and mission. It provides that a key component of the Bureau's fair lending work is to ensure fair, equitable, and nondiscriminatory access to credit for both individuals and their communities.[160] And in passing section 1071, Congress articulated two purposes for requiring the Bureau to collect data on small business credit applications and loans—to ''facilitate enforcement of fair lending laws'' and to ''enable communities, governmental entities, and creditors to identify business and community development needs and opportunities of women-owned, minority-owned, and small businesses.'' [161] Although the Dodd-Frank Act does not further explain or clarify these dual statutory purposes, other Federal laws shed light on both purposes. That is, a set of existing Federal laws form the backdrop for the use of 1071 data to facilitate the enforcement of fair lending laws, and to identify business and community development needs of small businesses across the United States.

1. Facilitating Enforcement of Fair Lending Laws

Congress intended for section 1071 to ''facilitate enforcement of fair lending laws,'' [162] which include ECOA, the Home Mortgage Disclosure Act of 1975 (HMDA),[163] the Fair Housing Act (FHAct),[164] and other Federal and State anti-discrimination laws.

i. Equal Credit Opportunity Act (ECOA)

ECOA, which is implemented by Regulation B, applies to all creditors. Congress first enacted ECOA in 1974 to require financial institutions and other firms engaged in the extension of credit to ''make credit equally available to all creditworthy customers without regard to sex or marital status.'' [165] Two years later, Congress expanded ECOA's scope to include age, race, color, religion, national origin, receipt of public assistance benefits, and exercise of rights under the Federal Consumer Credit Protection Act.[166]

ECOA makes it unlawful for any creditor to discriminate against any applicant with respect to any aspect of a credit transaction (1) on the basis of race, color, religion, national origin, sex (including sexual orientation and gender identity),[167] marital status, or age (provided the applicant has the capacity to contract); (2) because all or part of the applicant's income derives from any public assistance program; or (3) because the applicant has in good faith exercised any right under the Consumer Credit Protection Act.[168] In keeping with the broad reach of the statute's prohibition, Regulation B covers creditor activities before, during, and after the extension of credit.[169] Regulation B also bars creditors from making any oral or written statement, in advertising or otherwise, to applicants or prospective applicants that would discourage, on a prohibited basis, a reasonable person from making or pursuing an application.[170] Regulation B also generally prohibits creditors from making inquiries about whether an applicant is a member of certain protected categories.[171]

The Bureau has recognized the following methods of proving lending discrimination under ECOA and Regulation B: Overt evidence of discrimination, evidence of disparate treatment, and evidence of disparate impact.[172] Overt evidence of discrimination exists when a creditor blatantly discriminates on a prohibited basis.[173] Disparate treatment occurs when a creditor treats an applicant differently based on a prohibited basis such as race or national origin.[174] Disparate impact occurs when a creditor employs facially neutral policies or practices that have an adverse effect or impact on a member of a protected class unless the facially neutral policies or practices meet a legitimate business need that cannot reasonably be achieved by means that are less disparate in their impact.[175]

Multiple Federal regulators can enforce violations of ECOA and Regulation B and apply various penalties. Enforcement and penalties for those who violate ECOA and Regulation B are set forth in 15 U.S.C. 1691e(b) and 12 CFR 1002.16. Violations may also result in civil money penalties, which are governed by 12 U.S.C. 5565(c)(3). The Bureau and multiple other Federal regulators have the statutory authority to bring actions to enforce the requirements of ECOA.[176] These regulators have the authority to engage in research, conduct investigations, file administrative complaints, hold hearings, and adjudicate claims through the administrative enforcement process regarding ECOA. Regulators also have independent litigation authority and can file cases in Federal court alleging violations of fair lending laws under their jurisdiction. Like other Federal regulators who are assigned enforcement authority under section 704 of ECOA, the Bureau is required to refer matters to the Department of Justice (DOJ) when it has reason to

[160] *See* 12 U.S.C. 5493(c)(2)(A) (directing the Office of Fair Lending and Equal Opportunity to provide ''oversight and enforcement of Federal laws intended to ensure the fair, equitable, and nondiscriminatory access to credit for both individuals and communities that are enforced by the Bureau,'' including ECOA and the Home Mortgage Disclosure Act).

[161] ECOA section 704B(a).

[162] *Id.*

[163] 12 U.S.C. 2801 *et seq.*

[164] 42 U.S.C. 3601 through 3619.

[165] Public Law 93–495, tit. V, section 502, 88 Stat. 1500, 1521 (1974).

[166] *See* Equal Credit Opportunity Act Amendments of 1976, Public Law 94–239, section 701(a), 90 Stat. 251, 251 (1976).

[167] In March 2021, the Bureau issued an interpretive rule clarifying that the scope of ECOA's and Regulation B's prohibition on credit discrimination on the basis of sex encompasses discrimination based on sexual orientation and gender identity, including discrimination based on actual or perceived nonconformity with sex-based or gender-based stereotypes and discrimination based on an applicant's associations. 86 FR 14363 (Mar. 16, 2021). *See also* Press Release, Bureau of Consumer Fin. Prot., *CFPB Clarifies That Discrimination by Lenders on the Basis of Sexual Orientation and Gender Identity Is Illegal* (Mar. 9, 2021), *https://www.consumerfinance.gov/about-us/newsroom/cfpb-clarifies-discrimination-by-lenders-on-basis-of-sexual-orientation-and-gender-identity-is-illegal/*. The interpretive rule states that an example of discriminatory sex-based or gender-based stereotyping occurs if a small business lender discourages a small business owner appearing at its office from applying for a business loan and tells the prospective applicant to go home and change because, in the view of the creditor, the small business customer's attire does not accord with the customer's gender. 86 FR at 14365.

[168] 15 U.S.C. 1601 *et seq.*

[169] *See* Regulation B § 1002.4(a) and (b).

[170] *Id.* § 1002.4(b).

[171] *Id.* § 1002.5(b) through (d).

[172] *See* Bureau of Consumer Fin. Prot., *CFPB Bulletin 2012–04 (Fair Lending), Lending Discrimination* (Apr. 18, 2012), *https://files.consumerfinance.gov/f/201404_cfpb_bulletin_lending_discrimination.pdf* (Interagency Policy Statement on Discrimination in Lending) (concurring with Interagency Task Force on Fair Lending, *Policy Statement on Discrimination in Lending,* 59 FR 18266 (Apr. 15, 1994)).

[173] *See* Interagency Policy Statement on Discrimination in Lending at 18268.

[174] *See* Regulation B comment 4(a)–1 (stating that ''[d]isparate treatment on a prohibited basis is illegal whether or not it results from a conscious intent to discriminate''); Bureau of Consumer Fin. Prot., *Equal Credit Opportunity Act (ECOA) Examination Procedures,* at 1 (Oct. 30, 2015), *https://files.consumerfinance.gov/f/documents/201510_cfpb_ecoa-narrative-and-procedures.pdf* (ECOA Examination Procedures); *see also* Interagency Policy Statement on Discrimination in Lending at 18268.

[175] *See* Regulation B comment 6(a)–2; ECOA Examination Procedures at 1; *see also* Interagency Policy Statement on Discrimination in Lending at 18269.

[176] These regulators include the OCC, the Board, the FDIC, the NCUA, the Surface Transportation Board, the Civil Aeronautics Board, the Secretary of Agriculture, the Farm Credit Administration, the Securities and Exchange Commission, the SBA, the Secretary of Transportation, the Bureau, and the FTC. *See* 15 U.S.C. 1691c; Regulation B § 1002.16(a).

believe that a creditor has engaged in a pattern or practice of lending discrimination.[177] Private parties may also bring claims under the civil enforcement provisions of ECOA, including individual and class action claims against creditors for actual and punitive damages for any violation of ECOA.[178]

ii. Home Mortgage Disclosure Act (HMDA)

HMDA, implemented by the Bureau's Regulation C (12 CFR part 1003), requires lenders who meet certain coverage tests to report detailed information to their Federal supervisory agencies about mortgage applications and loans at the transaction level. These reported data are a valuable resource for regulators, researchers, economists, industry, and advocates assessing housing needs, public investment, and possible discrimination as well as studying and analyzing trends in the mortgage market for a variety of purposes, including general market and economic monitoring. There may be some overlap between what is required to be reported under HMDA and what is covered by section 1071 for certain mortgage applications and loans for women-owned, minority-owned, and small businesses.

A violation of HMDA and Regulation C is subject to administrative sanctions, including civil money penalties. Compliance can be enforced by the Bureau, the U.S. Department of Housing and Urban Development (HUD), the FDIC, the Board, the National Credit Union Administration (NCUA), or the Office of the Comptroller of Currency (OCC). These regulators have the statutory authority to bring actions to enforce the requirements of HMDA and to engage in research, conduct investigations, file administrative complaints, hold hearings, and adjudicate claims through the administrative enforcement process regarding HMDA.

iii. Fair Housing Act (FHAct)

Title VIII of the Civil Rights Act of 1968, as amended (Fair Housing Act, or FHAct), prohibits discrimination in the sale, rental, or financing of dwellings and in other housing-related activities because of race, color, religion, sex (including sexual orientation and gender identity),[179] disability,[180] familial status, or national origin.[181] The Fair Housing Act[182] and its implementing regulations specifically prohibit discrimination in the making of loans,[183] the purchasing of loans,[184] and in setting the terms and conditions for making loans available,[185] without reference to consumers, legal entities, or the purpose of the loan being made, although these prohibitions relate exclusively to dwellings.[186] As with ECOA, the courts have recognized three methods of proof of lending discrimination under the FHAct: (1) Overt evidence of discrimination; (2) evidence of disparate treatment; and (3) evidence of disparate impact.[187]

The DOJ and HUD are jointly responsible for enforcing the Fair Housing Act. The Fair Housing Act authorizes the HUD Secretary to issue a Charge of Discrimination on behalf of aggrieved persons following an investigation and a determination that reasonable cause exists to believe that a discriminatory housing practice has occurred.[188] The DOJ may bring lawsuits where there is reason to believe that a person or entity is engaged in a ''pattern or practice'' of discrimination or where a denial of rights to a group of persons raises an issue of general public importance,[189] or where a housing discrimination complaint has been investigated by HUD, HUD has issued a Charge of Discrimination, and one of the parties to the case has ''elected'' to go to Federal court.[190] In FHAct cases, HUD and the DOJ can obtain injunctive relief, including affirmative requirements for training and policy changes, monetary damages and, in pattern or practice cases, civil penalties.[191]

Upon receipt of a complaint alleging facts that may constitute a violation of the FHAct or upon receipt of information from a consumer compliance examination or other information suggesting a violation of the FHAct, Federal executive agencies forward such facts or information to HUD and, where such facts or information indicate a possible pattern or practice of discrimination in violation of the FHAct, to the DOJ.[192] Private parties may also bring claims under the civil enforcement provisions of FHAct.[193]

iv. Other Fair Lending Laws

Several other Federal statutes seek to promote fair lending. The CRA seeks affirmatively to encourage institutions to help to meet the credit needs of the entire community served by each institution covered by the statute, and CRA ratings take into account lending discrimination by those institutions.[194] The Americans with Disabilities Act of 1990 prohibits discrimination against persons with disabilities in the provision of goods and services, including credit services.[195] Sections 1981[196] and 1982[197] of the Federal Civil Rights Acts are broad anti-discrimination laws that have been applied to many aspects of credit transactions.[198]

[177] *See* 15 U.S.C. 1691e(h).

[178] 15 U.S.C. 1691e(a); Regulation B § 1002.16(b)(1).

[179] *See* U.S. Dep't of Hous. & Urban Dev., *Implementation of Executive Order 13988 on the Enforcement of the Fair Housing Act* (Feb. 11, 2021), *https://www.hud.gov/sites/dfiles/PA/documents/HUD_Memo_EO13988.pdf.*

[180] The Bureau uses the term ''disability'' to refer to what the FHA and its implementing regulations term a ''handicap'' because that is the preferred term. *See, e.g., Hunt* v. *Aimco Props., L.P.,* 814 F.3d 1213, 1218 n.1 (11th Cir. 2016) (noting the term disability is generally preferred over handicap).

[181] 42 U.S.C. 3601 through 3619, 3631.

[182] 42 U.S.C. 3605(b) (noting that for purposes of 3605(a), a ''residential real estate-related transaction'' includes the making or purchasing of loans or providing other financial assistance for purchasing, constructing, improving, repairing, or maintaining a dwelling, or transactions secured by residential real estate).

[183] 24 CFR 100.120.

[184] 24 CFR 100.125.

[185] 24 CFR 100.130.

[186] A ''dwelling,'' as defined by the Fair Housing Act, is any building, structure, or portion thereof which is occupied as, or designed or intended for occupancy as, a residence by one or more families, and any vacant land which is offered for sale or lease for the construction or location thereon of any such building, structure, or portion thereof. 42 U.S.C. 3602(b).

[187] *See* Interagency Policy Statement on Discrimination in Lending at 18268. *See also* 78 FR 11459, 11459 (Feb. 15, 2013) (stating that HUD, which is statutorily charged with the authority and responsibility for interpreting and enforcing the Fair Housing Act and with the power to make rules implementing the Act, ''has long interpreted the Act to prohibit practices with an unjustified discriminatory effect, regardless of whether there was an intent to discriminate'').

[188] 42 U.S.C. 3610(g)(1) and (2).

[189] *See* 42 U.S.C. 3614(a).

[190] 42 U.S.C. 3612(o)(1).

[191] *See* 42 U.S.C. 3612, 3614.

[192] 59 FR 2939, 2939 (Jan. 17, 1994).

[193] *See* 42 U.S.C. 3613.

[194] *See* 12 U.S.C. 2901 *et seq.*

[195] *See* 42 U.S.C. 12101 *et seq.*

[196] 42 U.S.C. 1981(a).

[197] 42 U.S.C. 1982.

[198] *See, e.g., Jackson* v. *Novastar Mortg., Inc.,* 645 F. Supp. 2d 636 (W.D. Tenn. 2007) (motion to dismiss claim that defendants violated sections 1981 and 1982 by racial targeting and by offering credit on less favorable terms on the basis of race denied); *Johnson* v. *Equicredit Corp.,* No. 01–CIV–5197, 2002 U.S. Dist. LEXIS 4817 (N.D. Ill. Mar. 22, 2002) (predatory lending/reverse redlining case brought pursuant to section 1981); *Hargraves* v. *Cap. City Mortg. Corp.,* 140 F. Supp. 2d 7 (D.D.C. 2000) (predatory lending/reverse redlining case brought under both sections 1981 and 1982), *reconsideration granted in part, denied in part,* 147 F. Supp. 2d 1 (D.D.C. 2001) (section 1981 claim dismissed for lack of standing, but not section 1982 claim); *Doane* v. *Nat'l Westminster Bank USA,* 938

Many States and municipalities have also enacted fair lending, fair housing, and/or civil rights laws (often modeled on their Federal counterparts) that seek to broadly prohibit credit discrimination, including protections for business credit.[199] Some of these laws expressly enumerate protections beyond those expressly enumerated in the Federal statutes.[200]

v. Facilitating Enforcement

In order for the 1071 rule to facilitate enforcement of the fair lending laws discussed above, the Bureau believes that it must collect and make available sufficient data to help the public and regulators identify potentially discriminatory lending patterns that could constitute violations of fair lending laws. Financial regulators and enforcement agencies need a consistent and comprehensive dataset for all financial institutions subject to 1071 reporting in order to also use 1071 data in their initial prioritization, peer analysis, redlining reviews, and screening processes to select institutions for monitoring, examination, or investigation. Section 1071 data would facilitate more efficient fair lending examinations. For example, regulators could use pricing and other data to prioritize fair lending examinations—without such data, some financial institutions would face unnecessary examination burden while others whose practices warrant closer review would not receive sufficient scrutiny.

Moreover, as discussed in part V below, the Bureau believes specific aspects of its proposal offer particular benefits for the enforcement of fair lending laws. For example, the Bureau's proposal regarding transactional and institutional coverage would allow community groups and government agencies to include most of the small business financing market in fair lending analyses. The proposed inclusion of pricing data fields such as interest rate and fees would provide information on disparities in pricing outcomes, and data fields such as gross annual revenue, denial reasons, and time in business would allow for a more refined analysis and understanding of disparities in both underwriting and pricing outcomes. While 1071 data alone generally will not offer proof of compliance with fair lending laws, regulators, community groups, researchers, and financial institutions will be able to use 1071 data to identify potential disparities in small business lending based on disaggregated categories of race and ethnicity. Overall, the data collection under 1071 rule will allow, for the first time, for comprehensive and market-wide fair lending risk analysis.

2. Identifying Business and Community Development Needs

The second purpose of section 1071 is to enable communities, governmental entities, and creditors to identify business and community development needs and opportunities of women-owned, minority-owned, and small businesses.[201]

Section 1071 does not expressly define the phrase ''business and community development needs.'' However, other Federal statutes and regulations, including the CRA and the Riegle Community Development and Regulatory Improvement Act of 1994,[202] reference or define the phrases ''business development'' and ''community development'' and can help explain what it means to enable communities, governmental entities, and creditors to ''identify business and community development needs and opportunities.''

The Bureau believes, based on its consideration of these other Federal statutes and regulations, that the proposed 1071 rule would provide more data to the public—including communities, governmental entities, and creditors—for analyzing whether financial institutions are serving the credit needs of their small business customers. In addition, with 1071 data, the public would be better able to understand access to and sources of credit in particular communities or industries, such as a higher concentration of risky loan products in a given community, and to identify the emergence of new loan products, participants, or underwriting practices. The data would not only assist in identifying potentially discriminatory practices, but would also contribute to a better understanding of the experiences that members within certain communities may share in the small business financing market.

i. Community Reinvestment Act (CRA)

The CRA, a part of the Housing and Community Development Act, was passed by Congress in 1977, which found that ''regulated financial institutions have continuing and affirmative obligation to help meet the credit needs of the local communities in which they are chartered.'' [203] As such, one of the statutory purposes of the CRA is to encourage such institutions to help meet the credit needs of the local communities in which they are chartered consistent with the safe and sound operation of such institutions.[204]

The legislative history for the CRA suggests that the concerns motivating the Act's passage included certain practices by banks including redlining (*i.e.,* declining to extend credit in neighborhoods populated by ethnic or racial minorities) [205] and community

F. Supp. 149 (E.D.N.Y. 1996) (mortgage redlining case brought under sections 1981 and 1982); *Fairman* v. *Schaumberg Toyota, Inc.,* No. 94–CIV–5745, 1996 U.S. Dist. LEXIS 9669 (N.D. Ill. July 10, 1996) (section 1981 suit over allegedly predatory credit scheme targeting African Americans and Hispanics); *Steptoe* v. *Sav. of Am.,* 800 F. Supp. 1542 (N.D. Ohio 1992) (mortgage redlining case brought under sections 1981 and 1982 and the Fair Housing Act); *Evans* v. *First Fed. Sav. Bank of Ind.,* 669 F. Supp. 915 (N.D. Ind. 1987) (section 1982 can be used in mortgage lending discrimination case); *Assocs. Home Equity Servs.* v. *Troup,* 778 A.2d 529 (N.J. 2001) (predatory lending/reverse redlining case brought pursuant to section 1981).

[199] *See, e.g.,* Cal. Civ. Code 51 and 51.5 and Cal. Gov't Code 12955; Colo. Rev. Stat. 24–34–501(3) and 5–3–210; Conn. Gen. Stat. 46a-81e, 46a-81f, and 46a-98; Del. Code Ann. tit. 6, 4604; D.C. Code 2–1402.21; Haw. Rev. Stat. 515–3 and 515–5; 775 Ill. Comp. Stat. 5/1–102, 5/1–103, 5/4–102, 5/3–102, and 5/4–103; Iowa Code 216.8A and 216.10; Me. Rev. Stat. tit. 5, 4553(5–C) and (9–C), 4595 to 4598, and 4581 to 4583; Md. Code Ann. State Gov't 20–705, 20–707, and 20–1103; Mass. Gen. Laws ch. 151B, 4(3B), (14); Minn. Stat. 363A.03 (Subd. 44), 363A.09(3), 363A.16 (Subds. 1 and 3), and 363A.17; N.H. Rev. Stat. Ann. 354–A:10; N.J. Stat. Ann. 10:5–12(i); N.M. Stat. Ann. 28–1–7; N.Y. Civ. Rights Law 40-c(2); N.Y. Exec. Law 296–A; Or. Rev. Stat. 174.100(7) and 659A.421; R.I. Gen. Laws 34–37–4(a) through (c), 34–37–4.3, and 34–37–5.4; Va. Code Ann. 6.2–501(B)(1), 15.2–853, and 15.2–965; Vt. Stat. Ann. tit. 8, 10403 and tit. 9, 2362, 2410, and 4503(a)(6); Wash. Rev. Code 49.60.030, 49.60.040 (14), (26), and (27), 49.60.175, and 49.60.222; Wis. Stat. 106.50 and 224.77. There are also a number of municipalities that have enacted credit discrimination ordinances. *See, e.g.,* Austin City Code 5–1–1 *et seq.;* N.Y.C. Admin. Code 8–101 and 8–107 *et seq.;* S.F. Police Code 3304(a) *et seq.*

[200] *See, e.g.,* Mass. Gen. Laws ch. 151B, 4(3B) (prohibiting discrimination based on genetic information); N.J. Stat. Ann. 10:5–1 to 10:5–42 (same); D.C. Code 2–1401.02 and 2–1402.21 (extending protections from discrimination to domestic violence victims); Wis. Stat. 224.77 (same); N.Y. Exec. Law 296-a (prohibiting discrimination on the basis of military status) (credit transactions); N.Y. Exec. Law 296(5)(a) through (c) (same) (housing transactions); Wash. Rev. Code 49.60.176 (protecting veterans and honorably discharged service members); 775 Ill. Comp. Stat. 5/3–101 and 5/4–101 (prohibiting discrimination based on an applicant's unfavorable discharge from the military); 815 Ill. Comp. Stat. 140/1a (same). Several other State statutes also prohibit discrimination based on the geographic area of residence. *See, e.g.,* 815 Ill. Comp. Stat. 120/1 to 120/6; Iowa Code 535A.1 to 535A.9; Md. Code Ann., Com. Law 12–603 (West); Mich. Comp. Laws 445.1601 to 445.1614; Minn. Stat. 363A.09(3)(c); N.Y. Banking Law 9–f; Wash. Rev. Code 30.04.500 to 30.04.515.

[201] ECOA section 704B(a).

[202] Public Law 103–325, tit. I, section 102, 108 Stat. 2160, 2163 (1994) (12 U.S.C. 4701 through 4719).

[203] 12 U.S.C. 2901(a)(3).

[204] 12 U.S.C. 2901(b).

[205] *See* H.R. Rep. No. 561, 94th Cong., 1st Sess. 4 (1975) (''[The practice of redlining] increasingly

Continued

disinvestment (*i.e.,* taking deposits from lower-income areas, often populated by ethnic or racial minorities, without extending credit or banking services to residents of those areas).[206] The CRA requires the ''appropriate Federal financial supervisory agency'' of a given depository institution to ''prepare a written evaluation of the institution's record of meeting the credit needs of its entire community, including low- and moderate-income neighborhoods.'' [207] These requirements were first implemented by a 1978 rulemaking,[208] and were amended in 1995 [209] and 2005.[210] These rulemakings, adopted by each of the agencies responsible for ensuring compliance with the CRA, established specific performance measures,[211] requiring banks to disclose information about small business, small farm and community development lending.[212]

The agencies tasked with ensuring compliance—including the OCC,[213] the Board,[214] and the FDIC [215]—evaluate each insured depository institution's record in helping meet the credit needs of its entire community.[216] Overall, the CRA and its regulations generate data that help agencies and the public at large identify instances of redlining, community disinvestment, and geographical areas that are ''banking deserts.'' [217] The CRA regulations of the Board and the FDIC currently have the same definitions of ''community development'' that include banking and credit services that support the following: (1) Affordable housing for low- and moderate-income (LMI) individuals; [218] (2) community services for LMI individuals; [219] (3) activities that promote economic development by financing small business and small farms; [220] and (4) activities that revitalize or stabilize LMI geographies, disaster areas, and certain distressed or underserved middle-income areas based on other factors.[221]

In September 2020, the Board announced an advance notice of proposed rulemaking to update its CRA regulations, specifically to more effectively meet the needs of LMI communities and address inequities in credit access.'' [222] As part of this exercise, the Board requested feedback on potential revisions to its data collection and reporting requirements.[223] The Board suggested that more granular reporting of community development loan and investment data may be needed to aid community development and improve compliance with the CRA, noting that the lack of such data ''means that there is no aggregate community development data at a local level available to create the local benchmarks for the community development financing metric.'' [224] As such, the publication of 1071 data would also be a useful resource for supporting community development efforts under the CRA.

In June 2020, the OCC promulgated a final rule that adopted a broader definition of ''community development'' than the one used by the Board and the FDIC.[225] However, in July 2021, the OCC announced that it was reconsidering the June 2020 revisions to its CRA regulations,[226] and that it may join the Board's consideration of proposed revisions to strengthen bank compliance with CRA regulations.[227]

ii. Community Development Financial Institution Fund (CDFI Fund)

The Riegle Community Development and Regulatory Improvement Act of 1994 authorized the CDFI Fund.[228] In passing that statute, Congress found that many of the Nation's urban, rural, and Native American communities face ''critical social and economic problems arising in part from the lack of economic growth, people living in poverty, and the lack of employment and other opportunities.'' [229]

To address these problems, Congress created the CDFI Fund to ''promote economic revitalization and community development'' through investment in and assistance to CDFIs, including enhancing the liquidity of CDFIs.[230]

The concept of community development is central to the operation of the CDFI Fund. While CDFI Fund regulations do not directly define that term, any entity applying for CDFI certification must have ''promoting community development'' as its ''primary mission.'' [231] In making this determination, the CDFI Fund considers whether the activities of the entity are purposefully directed toward improving the social and/or economic conditions of underserved people, which may include low-income persons or persons

has served to polarize elements of our society . . . . As polarization intensifies, neighborhood decline accelerates.''), *reprinted in* 1975 U.S.C.C.A.N. 2303, 2305–06.

[206] Robert C. Art, *Social Responsibility in Bank Credit Decisions: The Community Reinvestment Act One Decade Later,* 18 Pac. L.J. 1071, 1076–77 & n.23 (1987) (citing 123 Cong. Rec. S8958 (daily ed. June 6, 1977), which stated that Sen. Proxmire, the congressional sponsor of the Act described redlining as ''the fact that banks and savings and loans will take their deposits from a community and instead of reinvesting them in that community, they will invest them elsewhere, and they will actually or figuratively draw a red line on a map around the areas of their city,'' further noting that those lines are drawn ''sometimes in the inner city, sometimes in the older neighborhoods, sometimes ethnic and sometimes black . . . .'').

[207] 12 U.S.C. 2906(a)(1).

[208] 43 FR 47144 (Oct. 12, 1978).

[209] 60 FR 22156 (May 4, 1995).

[210] 70 FR 44256 (Aug. 2, 2005).

[211] 12 CFR 228.11.

[212] *See, e.g.,* 12 CFR 25.42, 228.11.

[213] 12 CFR part 25.

[214] 12 CFR part 228.

[215] 12 CFR parts 345, 195.

[216] Most specifically, that record is taken into account in considering an institution's application for deposit facilities, including mergers and acquisitions with other financial institutions and the opening of bank branches.

[217] OCC regulations define ''CRA desert'' as an area that has ''significant unmet community development or retail lending needs'' and where: (1) Few banks have branches or non-branch deposit-taking facilities, (2) There is ''less retail or community development lending than would be expected based on demographic or other factors,'' or (3) The area ''lacks community development organizations or infrastructure.'' 12 CFR 25.03.

[218] 12 CFR 228.12(g)(1), 345.12(g)(1).

[219] 12 CFR 228.12(g)(2), 345.12(g)(2).

[220] 12 CFR 228.12(g)(3), 345.12(g)(3).

[221] 12 CFR 228.12(g)(4), 345.12(g)(4).

[222] 85 FR 66410 (Oct. 19, 2020).

[223] *Id.* at 66459–63.

[224] *Id.* at 66462.

[225] The FDIC initially joined the OCC in issuing its early 2020 proposed rule to expand the definition of ''community development'' for purposes of CRA compliance, but it did not join the OCC in its issuance of a rule finalizing that proposal. *Compare* 85 FR 1204 (Jan. 9, 2020) (joint FDIC–OCC proposal to amend the agencies' respective CRA regulations), *with* 85 FR 34734 (June 5, 2020) (OCC final rule amending CRA regulations). The rule added to the range of activities that comprise ''community development'' for purposes of the OCC's revisions to the CRA regulations. Specifically, the OCC expanded the qualifying activities criteria to capture activities the OCC stated were consistent with the statutory purpose of the CRA but that generally did not receive credit under CRA regulations prior to the OCC's revisions, including certain activities in identified ''areas of need beyond LMI areas (*i.e.,* underserved areas, distressed areas, disaster areas, Indian country and other tribal and native lands)'' as well as those activities that ''benefit a whole community, while maintaining an appropriate focus on LMI neighborhoods.'' 85 FR 34734, 34735 (June 5, 2020); *see also* 12 CFR 25.04(a)(1) (stating that a retail loan, a community development loan, a community development investment, or a community development service ''that helps to meet the credit needs of a bank's entire community, including low- and moderate-income communities, is a qualifying activity if it meets the criteria in this section at the time the activity is originated, made, or conducted''); 12 CFR 25.04(b)(3) (listing 12 sets of activities that qualify as community development loans, investments and services).

[226] Off. of the Comptroller of the Currency, *OCC Statement on Rescinding its 2020 Community Reinvestment Act Rule* (News Release 2021–76) (July 20, 2021), *https://www.occ.gov/news-issuances/news-releases/2021/nr-occ-2021-76.html* (stating that the OCC will propose rescinding its June 2020 CRA final rule).

[227] *Id.* (noting the crucial nature of strengthening the CRA jointly with the Board and FDIC and signaling intention to issue a joint notice of proposed rulemaking building on the ANPR proposed by the Board in September 2020).

[228] 12 U.S.C. 4701(b).

[229] 12 U.S.C. 4701(a)(1).

[230] 12 U.S.C. 4701(b).

[231] 12 CFR 1805.201(b)(1).

who lack adequate access to capital and financial services and residents of economically distressed communities.[232]

The CDFI Fund collects data from the recipients of its financial and technical assistance, shedding some light on the extent of community development in the areas where CDFIs operate.[233] The CDFI Fund also publishes the data it receives with appropriate redactions to protect privacy interests.[234] However, given that CDFIs comprise a relatively small share of the overall small business lending market, section 1071 would materially enhance understanding of the broader extent of community development outside of areas where CDFIs already operate. The data from a 1071 rulemaking would also likely augment the data the CDFI Fund already receives.

3. Potential Impact of Section 1071 Data

A section 1071 rule would provide on an annual basis application-level data on small business credit, including certain protected demographic information about applicants and their principal owners. This would include information on applications for credit that are originated, as well as those that are denied, withdrawn, incomplete, or approved by the financial institution but not accepted by the applicant. This information would enable stakeholders of all kinds in the small business lending market to gain unprecedented insight into trends in small business lending, specifically with respect to women-owned and minority-owned small businesses. It would also provide insight into the interaction of supply and demand over time.

In terms of facilitating fair lending enforcement, interested government agencies and other stakeholders would be able to use 1071 data to analyze potential instances of practices resulting in the disparate treatment of or disparate impact on women- and minority-owned small businesses, using statistical methods to identify possible fair lending risks.

Regarding the identification of business and community development needs, the data that would be made available by the Bureau under this rulemaking, if finalized as proposed, would help government entities and public and private lenders identify and target sub-segments of the market that remain underserved, facilitating entrepreneurship and business development in those communities.

The advancement of both statutory purposes of section 1071—facilitating fair lending enforcement and identifying business and community development needs—in turn will support small businesses across all sectors of the economy, which are fundamental to the economic health of the U.S. and which have been hard hit by recent economic and financial crises. The use of data that would be provided pursuant to regulations under section 1071 can both support the underlying purposes of section 1071 and help the economy as a whole. For example, according to one estimate, fair and equitable lending to Black entrepreneurs could have added $13 trillion in business revenue over the last 20 years and created 6 million jobs.[235] As the economy recovers from the effects of the COVID–19 pandemic, data collected and published pursuant to regulations implementing section 1071 would help to support equitable and sustainable growth and prosperity in all communities in the U.S.

4. Bureau Priorities

On June 2, 2021, the Bureau announced as priorities action to address issues of pervasive racial injustice and the long-term economic impacts of the COVID–19 pandemic on consumers.[236] The Acting Director explained that the Bureau will use all of its tools and authority—including rulemaking—to protect and fight for fairness for all consumers in financial markets.[237] The Bureau believes that implementing the section 1071 data collection, maintenance, and reporting obligations established in the Dodd-Frank Act would advance those priorities.

Congress enacted section 1071 for the purposes of facilitating enforcement of fair lending laws, and enabling communities, governmental entities, and creditors to identify business and community development needs and opportunities for women-owned, minority-owned, and small businesses. The Bureau believes that 1071 data will come to play an important role as HMDA data have done for the mortgage market. HMDA data have provided lenders, community groups, and others the tools to identify and address fair lending risks and strengthen fair lending oversight and enforcement. In a similar way, section 1071 data will allow diverse stakeholders to analyze lending patterns that are potentially discriminatory. By identifying and addressing discriminatory small business lending practices, the Bureau will help to ensure fair, equitable, and nondiscriminatory access to credit for both individuals and their communities.

HMDA data have also proven effective in creating transparency in the mortgage market that improves the understanding of credit needs, where they may remain unmet, and the relationship between mortgage lending and community development. The Bureau believes that the 1071 data will provide the Bureau and other stakeholders with critical insights into the small business lending market. The current COVID–19 pandemic has shown that transparency is essential at a time of crisis, when small businesses, especially those owned by women and minorities, may be in urgent need of credit in order to recover from the economic shocks. As at least one SER suggested, a 1071 rule would help lenders across the country better connect underserved entrepreneurs to working capital and resources in order to build a more inclusive economy.

## III. Outreach

In the years leading up to the release of this proposed rule, the Bureau held over 100 outreach meetings with financial institutions, trade associations, community groups, researchers, governmental entities, and other stakeholders regarding the 1071 rulemaking. The Bureau also took a number of other steps, beyond individual stakeholder meetings, to solicit feedback more broadly from the public on a 1071 rule.

*Request for information, field hearing, and White Paper on small business lending.* On May 10, 2017, the Bureau published a request for information (RFI) regarding the small business lending market[238] in which it sought public comment to understand more about the products that are offered to small businesses, the financial institutions that offer such credit, the small business lending data that currently are used and may be maintained by financial institutions, the potential complexity and cost of small business data collection and reporting,

[232] *Id.*

[233] 12 CFR 1805.803(e) (requiring recipients of technical and financial assistance to provide to the CDFI Fund certain information and documentation).

[234] 12 CFR 1805.803(e)(4).

[235] Citigroup, Citi GPS: Global Perspectives & Solutions, *Closing the Racial Inequality Gaps: The Economic Cost of Black Inequality in the U.S.,* at 4 (Sept. 2020), *https://ir.citi.com/NvIUklHPilz14Hwd3oxqZBLMn1_XPqo5FrxsZD0x6hhil84ZxaxEuJUWmak51UHvYk75VKeHCMI%3D.*

[236] Blog post, Dave Uejio, Acting Director, Bureau of Consumer Fin. Prot., *Addressing racial inequities in consumer finance markets* (June 2, 2021), *https://www.consumerfinance.gov/about-us/blog/addressing-racial-inequities-consumer-finance-markets/.*

[237] *See* Bureau of Consumer Fin. Prot., *https://www.consumerfinance.gov/about-us/racial-equity/.*

[238] 82 FR 22318 (May 15, 2017).

and privacy concerns related to the disclosure purposes of section 1071.[239] On the same date, the Bureau held a field hearing regarding section 1071 at which the RFI was announced and then-Director Richard Cordray noted the importance of a section 1071 rulemaking given the absence of systematic data on how small businesses are faring and whether or how much they are being held back by financing constraints.[240] Finally, at the same time, the Bureau also published its White Paper on small business lending,[241] which reflected the initial findings of the Bureau's research providing a preliminary understanding of the small business lending environment, with a particular emphasis on lending to women-owned and minority-owned small businesses.

*1071 Symposium.* In November 2019, the Bureau held a symposium on section 1071 to assist the Bureau in its policy development process and to receive feedback from experts, including academic, think tank, consumer advocate, industry, and government experts in the small business lending arena.[242] The symposium had two panels. The first panel focused on the evolution in the small business lending marketplace. The second panel included a discussion surrounding the implementation of section 1071, including issues raised in response to the Bureau's RFI.

*Small Business Advisory Review Panel.* Under the Small Business Regulatory Enforcement Fairness Act of 1996 (SBREFA),[243] which amended the Regulatory Flexibility Act (RFA), the Bureau must convene and chair a Small Business Advisory Review Panel (Panel) if it is considering a proposed rule that could have a significant economic impact on a substantial number of small entities.[244] The Panel considers the impact of the proposals under consideration by the Bureau and obtains feedback from representatives of the small entities that would likely be subject to the rule. The Panel is comprised of a representative from the Bureau, the Chief Counsel for Advocacy of the Small Business Administration (SBA), and a representative from the Office of Information and Regulatory Affairs (OIRA) in the Office of Management and Budget (OMB). Representatives from 20 small businesses were selected as small entity representatives (SERs) for this SBREFA process. These SERs were representatives of small businesses that are financial institutions that would likely be directly affected by a 1071 rule. These SERs did *not* represent the small business applicants for credit about whom information would be collected and reported under a 1071 rule.

On September 15, 2020, the Bureau issued its Outline of Proposals under Consideration and Alternatives Considered (Outline or SBREFA Outline) for the section 1071 rulemaking, a detailed document that discusses (1) the relevant law, (2) the regulatory process, (3) the rule proposals the Bureau was considering, and (4) an economic analysis of the potential impacts of those proposals on directly affected small entities.[245]

The Bureau convened the Panel for this proposed rule on October 15, 2020 and held a total of four meetings with SERs during October 19–22, 2020, conducted online via video conference (Panel Outreach Meetings). In preparation for the Panel Outreach Meetings and to facilitate an informed and detailed discussion of the proposals under consideration, discussion questions for the SERs were included throughout the Bureau's Outline.[246]

In advance of the Panel Outreach Meetings, the Bureau, SBA's Office of Advocacy, and OIRA held a series of video conferences with the SERs to describe the Small Business Review Process, obtain important background information about each SER's current business practices, and begin discussions on selected portions of the proposals under consideration.

All 20 SERs participated in the Panel Outreach Meetings. Representatives from the Bureau, SBA's Office of Advocacy, and OIRA provided introductory remarks. The meetings were then organized around discussions led by the Bureau about each aspect of the proposals under consideration and the potential impact on small businesses. The Bureau also invited SERs to submit written feedback by November 9, 2020; most SERs did so.

On December 15, 2020, the Bureau released the Final Report of the Small Business Review Panel on the CFPB's Proposals Under Consideration for the Small Business Lending Data Collection Rulemaking.[247] This report includes a summary of the feedback received from SERs during the panel process (including oral feedback received during the pre-Panel video conferences and Panel Outreach Meetings, as well as timely submitted written feedback) and findings and recommendations made by the Panel.[248] As required by the RFA, the Bureau considers the Panel's findings in its initial regulatory flexibility analysis, as set out in part VIII below.

The Bureau also invited other stakeholders to submit feedback on the SBREFA Outline by December 14, 2020. The Bureau received approximately 60 submissions from a variety of other stakeholders, including financial institutions, trade associations,

[239] In response to the RFI, the Bureau received over 2,000 comments in total, and over 100 unique comments offering detailed substantive responses on the topics raised in the RFI. These comments from the public helped to inform the Bureau's approach in its SBREFA Outline. *See* Bureau of Consumer Fin. Prot., *Request for Information Regarding the Small Business Lending Market,* Docket ID CFPB–2017–0011, *https://www.regulations.gov/docket/CFPB-2017-0011.*

[240] *See* Bureau of Consumer Fin. Prot., *Prepared Remarks of CFPB Director Richard Cordray at the Small Business Lending Field Hearing* (May 10, 2017), *https://www.consumerfinance.gov/about-us/newsroom/prepared-remarks-cfpb-director-richard-cordray-small-business-lending-field-hearing/.*

[241] Bureau of Consumer Fin. Prot., *Key dimensions of the small business lending landscape* (May 2017), *https://files.consumerfinance.gov/f/documents/201705_cfpb_Key-Dimensions-Small-Business-Lending-Landscape.pdf.*

[242] Bureau of Consumer Fin. Prot., *Symposium: Section 1071 of the Dodd-Frank Act* (held Nov. 6, 2019), *https://www.consumerfinance.gov/about-us/events/archive-past-events/cfpb-symposium-section-1071-dodd-frank-act/.*

[243] Public Law 104–121, 110 Stat. 857 (1996).

[244] 5 U.S.C. 609(b).

[245] Bureau of Consumer Fin. Prot., *Small Business Advisory Review Panel for Consumer Financial Protection Bureau Small Business Lending Data Collection Rulemaking, Outline of Proposals Under Consideration and Alternatives Considered* (Sept. 15, 2020), *https://files.consumerfinance.gov/f/documents/cfpb_1071-sbrefa_outline-of-proposals-under-consideration_2020-09.pdf* (SBREFA Outline). *See also* Bureau of Consumer Fin. Prot., *Consumer Financial Protection Bureau Releases Outline of Proposals Under Consideration to Implement Small Business Lending Data Collection Requirements* (Sept. 15, 2020), *https://www.consumerfinance.gov/about-us/newsroom/cfpb-releases-outline-proposals-implement-small-business-lending-data-collection-requirements/.*

[246] These questions also appeared in a shorter Discussion Guide for Small Entity Representatives. *See* Bureau of Consumer Fin. Prot., *Small Business Advisory Review Panel for Consumer Financial Protection Bureau Small Business Lending Data Collection Rulemaking, Discussion Guide for Small Entity Representatives* (Sept. 15, 2020), *https://files.consumerfinance.gov/f/documents/cfpb_1071-sbrefa_discussion-guide_2020-09.pdf.*

[247] Bureau of Consumer Fin. Prot., *Final Report of the Small Business Review Panel on the CFPB's Proposals Under Consideration for the Small Business Lending Data Collection Rulemaking* (Dec. 14, 2020), *https://files.consumerfinance.gov/f/documents/cfpb_1071-sbrefa-report.pdf* (SBREFA Panel Report). *See also* Bureau of Consumer Fin. Prot., *Consumer Financial Protection Bureau Releases Report on Implementing the Dodd-Frank Act's Small Business Lending Data Collection Requirement* (Dec. 15, 2020), *https://www.consumerfinance.gov/about-us/newsroom/consumer-financial-protection-bureau-releases-report-on-implementing-the-dodd-frank-acts-small-business-lending-data-collection-requirement/.* The Bureau's SBREFA Outline and related materials, as well as the Bureau's presentation slides framing the discussion during the Panel Outreach Meetings, are appended to the SBREFA Panel Report. *See* SBREFA Panel Report at app. C through F.

[248] The written feedback from SERs is appended to the Panel Report. *See id.* at app. A.

community groups, a think tank, and a government agency.[249] Feedback from these other stakeholders was not considered by the Panel and is not reflected in the Panel Report.

The Bureau has considered the feedback it received from SERs, the findings and recommendations of the Panel, and the feedback from other stakeholders in preparing this proposed rule. The feedback, findings, and recommendations are summarized throughout this notice where relevant.

*One-Time Cost Survey.* On July 22, 2020, the Bureau released a voluntary survey to measure the one-time costs of compliance with an eventual small business lending data collection rule.[250] The objective of the survey was to solicit, from institutions offering small business credit products that could potentially be covered by this rule, information about potential one-time costs to prepare to collect and report data. The survey did not cover potential on-going costs from actually collecting and reporting 1071 data, and assumed that reporting was required only for the 13 statutorily required data points and that compliance with the statutory firewall requirement was not required.[251] The deadline for responses was October 16, 2020. The Bureau received responses from 105 financial institutions.[252] The results of the survey inform the Bureau's analyses of the potential impacts of the proposed rule as set out in parts VII and VIII below.

*ECOA request for information.* On July 28, 2020, the Bureau issued a request for information to seek public input on ECOA and Regulation B.[253] In the RFI, the Bureau sought public comment on a number of topics, including small business lending and the ways that the Bureau, in light of its authority under ECOA and Regulation B, might support efforts to meet the credit needs of small businesses, particularly those that are minority-owned and women-owned.[254]

*Ongoing market monitoring.* The Bureau conducts outreach to industry and other stakeholders to understand their experiences with the small business finance market, economic conditions, and the collection and reporting of data regarding that market. A particular near-term priority in the Bureau's recent market monitoring has been the impacts of the pandemic and the effectiveness of the Federal government response. Findings from market monitoring activities inform the Bureau on matters affecting the small business sector.

*Technical outreach.* In the months before the publication of this proposed rule, the Bureau began conducting technical outreach with third party software providers that serve financial institutions and software and technology staff from financial institutions that are likely to have to report 1071 data to the Bureau. With these software vendors and technical staffs, the Bureau has held and, after publication of this proposed rule, will continue to hold discussions concerning the technical systems and procedures the Bureau will provide to collect 1071 data. The Bureau intends to understand the technology solutions currently provided by vendors to support the small business lending activities of financial institutions. The Bureau believes this information will be helpful in informing the Bureau in its design and implementation of a platform for intake and processing of 1071 data to help the platform integrate, to the degree possible, with existing systems and data collection procedures. These meetings also serve to raise awareness of technology providers as to their potential future role in supporting the 1071 rule as well as the lead time that may be necessary for some or all affected financial institutions to come into compliance with the requirements of a final section 1071 rule. The feedback that the Bureau is gathering is purely technical in nature. This outreach process is ongoing and will continue throughout the rulemaking.

## IV. Legal Authorities

The Bureau is issuing this proposed rule pursuant to its authority under section 1071. Some aspects of this rule are also proposed under the Bureau's more general rulemaking authorities in ECOA. Congress enacted ECOA to prohibit discrimination against any applicant, regarding any aspect of a credit transaction, on the basis of, amongst other things, race, color, national origin, and sex.[255] The Bureau has certain oversight, enforcement, and supervisory authority over ECOA requirements and has rulemaking authority under the statute.

ECOA is implemented in Regulation B.[256] Among other things, Regulation B generally prohibits creditors from inquiring about an applicant's race, color, religion, national origin, or sex, with limited exceptions, including if it is required by law.[257]

As discussed above, in the Dodd-Frank Act Congress amended ECOA by adding section 1071, which directs the Bureau to adopt regulations governing the collection and reporting of small business lending data. Specifically, section 1071 requires financial institutions to collect and report to the Bureau certain data on applications for credit for women-owned, minority-owned, and small businesses.[258] Congress enacted section 1071 for the purpose of (1) facilitating enforcement of fair lending laws and (2) enabling communities, governmental entities, and creditors to identify business and community development needs and opportunities of women-owned, minority-owned, and small businesses.[259] The Bureau often refers to these as section 1071's fair lending purpose and its business and community development purpose, respectively.

To advance these statutory purposes, section 1071 grants the Bureau general rulemaking authority for section 1071, providing that the Bureau shall prescribe such rules and issue such guidance as may be necessary to carry out, enforce, and compile data pursuant to section 1071.[260] ECOA section 704B(g)(2) also permits the Bureau to adopt exceptions to any requirement of section 1071 and to conditionally or unconditionally exempt any financial institution or class of financial institutions from the requirements of section 1071, as the Bureau deems necessary or appropriate to carry out the purposes of section 1071. The Bureau principally relies on its 704B(g)(1) authority in this proposed rule and relies on 704B(g)(2) when proposing specific exceptions or exemptions to section 1071's requirements. Section 704B(g)(3) directs the Bureau to issue guidance designed to facilitate compliance with the requirements of section 1071.

In addition, section 703(a) of ECOA gives the Bureau broad authority to prescribe regulations to carry out the purposes of ECOA, including provisions

[249] Feedback received from these stakeholders on the SBREFA Outline will be placed on the public docket for this notice.

[250] Bureau of Consumer Fin. Prot., *Survey: Small Business Compliance Cost Survey* (July 22, 2020), *https://files.consumerfinance.gov/f/documents/cfpb_1071-survey_2020-10.pdf.*

[251] *Id.* at 1.

[252] See part VI below for additional details regarding this survey.

[253] Bureau of Consumer Fin. Prot., *Consumer Financial Protection Bureau Requests Information on Ways to Prevent Credit Discrimination and Build a More Inclusive Financial System* (July 28, 2020), *https://www.consumerfinance.gov/about-us/newsroom/cfpb-rfi-prevent-credit-discrimination-build-more-inclusive-financial-system/.*

[254] 85 FR 46600, 46602 (Aug. 3, 2020).

[255] 15 U.S.C. 1691(a)(1).

[256] 12 CFR part 1002.

[257] Regulation B § 1002.5(a)(2).

[258] ECOA section 704B.

[259] ECOA section 704B(a).

[260] ECOA section 704B(g)(1).

that in the judgment of the Bureau are necessary or proper to effectuate the purposes of ECOA, to prevent circumvention or evasion thereof, or to facilitate or substantiate compliance therewith. That section also states that the Bureau may provide for such adjustments and exceptions for any class of transactions, as in the judgment of the Bureau are necessary or proper to effectuate the purposes of ECOA, to prevent circumvention or evasion thereof, or to facilitate or substantiate compliance therewith.

Section 1071 establishes requirements or obligations for financial institutions that the Bureau would implement in this proposed rule. These provisions include the requirement in ECOA section 704B(b) that a financial institution shall inquire whether an applicant for credit is a women-owned, minority-owned, or small business; that a financial institution must maintain a record of responses to such inquiry, separate from the application; that an applicant may refuse to provide any information requested regarding the inquiry under 704B(b); that a financial institution must limit access of loan underwriters, or other officers or employees of the financial institution or any affiliate, to applicant responses to inquiries under 704B(b); and that if a financial institution determines that a loan underwriter or other officer or employee should have access to any information provided by the applicant pursuant to a request under 704B(b) that the financial institution shall provide notice to the applicant of the access of the underwriter to such information, along with notice that the financial institution may not discriminate on the basis of such information.[261]

ECOA section 704B(e)(1) directs financial institutions to compile and maintain, in accordance with regulations of the Bureau, records of the information provided by applicants for credit pursuant to a request under 704B(b). Section 704B(e)(2) requires that the information compiled and maintained under 704B(e)(1) be itemized in order to clearly and conspicuously disclose an enumerated list of data points. Section 704B(e)(2)(H) requires financial institutions to compile and maintain any additional data that the Bureau determines would aid in fulfilling the purposes of section 1071.

Several provisions of section 1071 expressly refer to regulations that the Bureau shall promulgate to implement certain requirements, including in ECOA section 704B(e)(1) regarding how financial institutions must compile and maintain data pursuant to section 1071, and in 704B(f)(2)(B) and (C) regarding the form of information made available by financial institutions to the public and the form and manner in which the Bureau itself should make 1071 data available to the public generally.

Two provisions expressly give the Bureau discretion with respect to public availability of 1071 data. Specifically, ECOA section 704B(e)(4) states that the Bureau may, at its discretion, delete or modify 1071 data before making it available to the public if the Bureau determines that the deletion or modification of the data would advance a privacy interest. Section 704B(f)(3) gives the Bureau the discretion to compile and aggregate 1071 data for its own use, as well as to make public such compilations of aggregate data.

## V. Section-by-Section Analysis

*Overview*

In this *Overview* of part V, the Bureau first provides an overview of section 1071 and then a brief summary of the proposed rule. Each provision, along with its rationale and relevant feedback received through the SBREFA process, is discussed in detail in the section-by-section analyses that follow. The Bureau's proposed rule is largely consistent with, though more detailed than, its proposals under consideration in the SBREFA Outline. However, the Bureau has altered or refined its approach since SBREFA in certain respects, which are noted in the summary of the proposed rule below and discussed in detail in the section-by-section analyses that follow.

Next, the Bureau discusses the high-level and general comments regarding this rulemaking that it received from SERs and other stakeholders on its SBREFA Outline. Finally, the Bureau addresses several issues for which there is no proposed regulatory text or commentary.

The Bureau seeks comment on its proposed approach to implementing section 1071. Requests for comment on each provision and on particular issues are included throughout the section-by-section analyses in this part V.

*A. Overview of Section 1071*

As discussed above, section 1071 of the Dodd-Frank Act requires that financial institutions collect and report to the Bureau certain data regarding applications for credit for women-owned, minority-owned, and small businesses. Section 1071's statutory purposes are to (1) facilitate enforcement of fair lending laws, and (2) to enable communities, governmental entities, and creditors to identify business and community development needs and opportunities of women-owned, minority-owned, and small businesses.

Section 1071 specifies a number of data points that financial institutions are required to collect and report, and also provides authority for the Bureau to require any additional data that the Bureau determines would aid in fulfilling section 1071's statutory purposes. Section 1071 also contains a number of other requirements, including those that address restricting the access of underwriters and other persons to certain 1071 data and publication of 1071 data. In addition, section 1071 permits the Bureau, at its discretion, to modify or delete data prior to publication if it determines that such a deletion or modification would advance a privacy interest.

Section 1071 directs the Bureau to prescribe such rules, and issue such guidance as may be necessary to carry out, enforce, and compile data pursuant to section 1071. It also permits the Bureau to adopt exceptions to any requirement or to exempt financial institutions from the requirements of section 1071 as the Bureau deems necessary or appropriate to carry out the purposes of section 1071. Section 1071 also directs the Bureau to issue guidance designed to facilitate compliance with the requirements of section 1071. As discussed in part IV above and throughout the section-by-section analyses in this part V, most of the Bureau's proposal is dedicated to implementing these statutory provisions.

*B. Section 1071 in the Context of HMDA*

The Bureau's proposal for implementing section 1071 necessarily exists against the backdrop of HMDA[262] (as discussed in part II.F.1.ii above). With the passage of the Dodd-Frank Act in 2010, Congress enacted section 1071 at the same time that it amended HMDA and transferred HMDA rulemaking authority and other functions to the Bureau. HMDA is a data collection and reporting statute that requires certain depository institutions and for-profit nondepository institutions to collect, report, and disclose data about originations and purchases of mortgage loans, as well as mortgage loan applications that do not result in originations (for example, applications that are denied or withdrawn). The Bureau's Regulation C, 12 CFR part

[261] ECOA section 704B(b)(1), (b)(2), (c), (d)(1) and (2).

[262] 12 U.S.C. 2801 *et seq.*

1003, implements HMDA. In light of the similarities between 1071 and HMDA, the Bureau's section-by-section analyses in this part V often discusses how similar provisions are addressed in the context of HMDA.

HMDA's purposes are: (1) To help determine whether financial institutions are serving their communities' housing needs; (2) to assist public officials in distributing public investment to attract private investment; and (3) to assist in identifying potential discriminatory lending patterns and enforcing antidiscrimination statutes.

A covered institution for purposes of HMDA reporting is a depository or nondepository institution that meets the relevant coverage criteria set forth in the regulation. A depository institution is required to comply with Regulation C if it meets the asset-size threshold, location test, loan activity test, federally related test, and the loan-volume threshold for either closed-end loans or open-end lines of credit set forth in the regulation. A nondepository institution is required to comply with Regulation C if it meets the location test and the loan-volume threshold for either closed-end loans or open-end lines of credit set forth in the regulation.

A covered transaction under HMDA is generally a loan or line of credit secured (or, for applications, proposed to be secured) by a lien on a dwelling, that is not specifically excluded under Regulation C § 1003.3(c). The data points generally required to be reported about each covered transaction can be grouped into four broad categories: [263]

- Information about the applicants, borrowers, and underwriting process, such as ethnicity, race, and sex of the applicant,[264] the applicant's gross income and debt-to-income ratio, the application channel, action taken, and, if applicable, reason(s) for denial.
- Information about the property securing the loan or proposed to secure the loan, such as census tract and other property location information, construction method, property value, and additional information about manufactured and multifamily housing.
- Information about the features of the loan, such as the loan type, pricing information (including interest rate and origination charges), loan term, introductory rate period, and non-amortizing features.
- Certain unique identifiers, such as a universal loan identifier, loan originator identifier, and a legal entity identifier for the financial institution.

Covered institutions are required to submit their HMDA data by March 1 following the calendar year for which data are collected. Covered institutions with larger volumes of covered loans and applications are required to submit their HMDA data for each of the first three quarters of the year in addition to their annual submission.

Following the calendar year in which HMDA data are collected, a covered institution's disclosure statement [265] and modified loan/application register (LAR) become publicly available on the FFIEC's HMDA Platform.[266] In addition, aggregate reports for each Metropolitan Statistical Area and Metropolitan Division that show lending patterns by property location, age of housing stock, and income level, sex, ethnicity, and race become publicly available.

HMDA data are the primary source of information for regulators, researchers, economists, industry, and advocates analyzing the mortgage market both for HMDA's purposes and for general market monitoring. HMDA data are used by the Federal supervisory agencies to support a variety of activities. For example, Federal supervisory agencies use HMDA data as part of their fair lending [267] examination process, and also use HMDA data in conducting Community Reinvestment Act [268] performance evaluations. HMDA disclosures provide the public with information on the home mortgage lending activities of particular reporting entities and on activity in their communities. These disclosures are used by local, State, and Federal officials to evaluate housing trends and issues and by community organizations to monitor financial institution lending patterns.

*C. Summary of the Proposed Rule*

The Bureau is proposing to add a new subpart B to Regulation B to implement the requirements of section 1071 and to make conforming amendments to existing Regulation B. The Bureau's proposal is summarized below, in the order of the section-by-section analyses in this part V that follow.

1. General Provisions (§§ 1002.5(a)(4), 1002.101, and 1002.102)

*Changes to existing Regulation B (§ 1002.5(a)(4)).* The Bureau is proposing to amend existing § 1002.5(a)(4) to expressly permit voluntary collection and reporting of information regarding the ethnicity, race, and sex of applicants' principal owners, or whether the applicant is a minority-owned business or a women-owned business, in certain circumstances.

*Scope, purpose, and authority (§ 1002.101).* The Bureau is proposing in § 1002.101 to set forth the authority, purpose, and scope for proposed subpart B. Among other things, this proposed section would set forth section 1071's two statutory purposes of facilitating enforcement of fair lending laws and enabling communities, governmental entities, and creditors to identify business and community development needs and opportunities of women-owned, minority-owned, and small businesses.

*Definitions (§ 1002.102).* The Bureau is proposing in § 1002.102 a number of definitions for terms used in proposed subpart B, which generally fall into several categories. First, some proposed definitions refer to terms defined elsewhere in proposed subpart B—specifically, terms of particular importance including business, covered application, covered credit transaction, covered financial institution, financial institution, and small business. Second, some proposed definitions refer to terms defined elsewhere in existing Regulation B (*i.e.,* business credit, credit, and State) or other regulations (*i.e.,* the definition of dwelling and a portion of the definition of affiliate reference Regulation C and an SBA regulation, respectively). Finally, the remaining terms are defined in proposed § 1002.102, including

[263] Under the Economic Growth, Regulatory Relief, and Consumer Protection Act, Public Law 115–174, 132 Stat. 1296 (2018), as implemented in Regulation C § 1003.3(d), certain HMDA-covered institutions may be eligible for partial exemptions from some of the HMDA reporting requirements and only certain covered loans and applications are covered under partial exemptions. If a covered loan or application is covered under a partial exemption, the covered institution is not required to collect, record, and report certain data points.

[264] As with section 1071, collection of an applicant's ethnicity, race, and sex under HMDA is an exception to the general prohibition on inquiring into protected demographic information in existing § 1002.5(b).

[265] A disclosure statement contains aggregated data derived from loan-level data.

[266] A HMDA LAR contains the record of information required to be collected and the record submitted annually or quarterly, as applicable. A modified LAR is a covered institution's LAR modified by the Bureau, on its website, to protect applicant and borrower privacy. The Bureau interprets HMDA, as amended by the Dodd-Frank Act, to call for the use of a balancing test to determine whether and how HMDA data should be modified prior to its disclosure to the public in order to protect applicant and borrower privacy while also fulfilling HMDA's public disclosure purposes. *See* 80 FR 66127, 66133–34 (Oct. 28, 2015). In December 2018, the Bureau issued final policy guidance describing the modifications the Bureau intends to apply to the loan-level HMDA data that covered institutions report before the data are disclosed publicly. *See* 84 FR 649 (Jan. 31, 2019).

[267] *See* ECOA (15 U.S.C. 1691 through 1691f), Regulation B, 12 CFR part 1002, and FHA, 42 U.S.C. 3605, 24 CFR part 100.

[268] 12 U.S.C. 2901 through 2908, and 12 CFR parts 25, 195, 228, and 345.

applicant, closed-end credit transaction, minority individual, minority-owned business, open-end credit transaction, principal owner, small business lending application register, women-owned business, and a portion of the definition of affiliate.

2. Coverage (§§ 1002.103 Through 1002.106)

*Covered applications (§ 1002.103).* The Bureau is proposing § 1002.103 to define what is, and is not, a covered application under proposed subpart B; this definition would trigger the data collection and reporting requirements under subpart B for covered financial institutions. The Bureau is proposing to define a covered application in § 1002.103(a) as an oral or written request for a covered credit transaction that is made in accordance with procedures used by a financial institution for the type of credit requested. The Bureau is also proposing that a covered application does not include (1) reevaluation, extension, or renewal requests on an existing business credit account, unless the request seeks additional credit amounts; and (2) inquiries and prequalification requests.

*Covered credit transactions (§ 1002.104).* The Bureau is proposing to require that covered financial institutions collect and report data for all covered applications from small businesses for transactions that meet the definition of business credit under existing Regulation B, with certain exceptions. The Bureau is proposing § 1002.104(a) to define the term covered credit transaction as an extension of business credit that is not an excluded transaction under proposed § 1002.104(b). Loans, lines of credit, credit cards, and MCAs (including such credit transactions for agricultural purposes and those that are also covered by HMDA'' [269] (that is, HMDA-reportable transactions)) would all fall within the scope of this proposed rule. The Bureau is proposing in § 1002.104(b) to exclude from the requirements of proposed subpart B trade credit, public utilities credit, securities credit, and incidental credit. Factoring, leases, consumer-designated credit used for business purposes, and credit secured by certain investment properties would also not be covered credit transactions.

*Covered financial institutions (§ 1002.105).* The Bureau is proposing to define in § 1002.105(a) the term financial institution, consistent with the definition in section 1071, as any partnership, company, corporation, association (incorporated or unincorporated), trust, estate, cooperative organization, or other entity that engages in any financial activity. Under this proposed definition, proposed subpart B's requirements would apply to a variety of entities that engage in small business lending, including depository institutions (*i.e.,* banks, savings associations, and credit unions), online lenders, platform lenders, CDFIs, lenders involved in equipment and vehicle financing (captive financing companies and independent financing companies), commercial finance companies, governmental lending entities, and nonprofit nondepository lenders. The Bureau is not proposing to cover motor vehicle dealers.[270] The Bureau is proposing in § 1002.105(b) to define the term covered financial institution as a financial institution that originated at least 25 covered credit transactions for small businesses in each of the two preceding calendar years. Only financial institutions that meet this loan-volume threshold would be required to collect and report small business lending data under proposed subpart B.

*Small business definition (§ 1002.106).* The Bureau is proposing in § 1002.106 to adopt the SBA's definitions of ''business'' and ''small business'' as set out in the Small Business Act and SBA regulations. The Bureau is also proposing that, notwithstanding the small business size standards established by SBA regulations, for purposes of proposed subpart B, a business is a small business if and only if its gross annual revenue is $5 million or less for its preceding fiscal year. The Bureau is seeking SBA approval for this alternate small business size standard pursuant to the Small Business Act.

3. Compiling, Maintaining, and Reporting 1071 Data (§§ 1002.107 Through 1002.111)

*Compilation of reportable data (§ 1002.107).* The Bureau is proposing in § 1002.107 to address several aspects of collecting data on covered applications from small businesses. The Bureau is proposing in § 1002.107(a) to require financial institutions to compile and maintain the data points enumerated in § 1002.107(a)(1) through (21) regarding covered applications from small businesses. These data points would be collected and reported in accordance with the proposed official commentary and the *Filing Instructions Guide* that the Bureau anticipates later providing for the appropriate year. Certain of these data points are or could be collected from the applicant (or otherwise determined based on information provided or authorized by the applicant); other data points are based on information solely within the financial institution's control. Proposed appendix E would provide a sample data collection form for requesting from applicants their minority- and women-owned business status and the race, sex, and ethnicity of their principal owners. Proposed appendices F and G provide additional details and guidance regarding collecting those data points.

The Bureau is proposing in § 1002.107(c)(1) that covered financial institutions maintain procedures to collect applicant-provided data at a time and in a manner that is reasonably designed to obtain a response. The Bureau's proposal also addresses what financial institutions should do if, despite having such procedures in place, they are unable to obtain certain data from an applicant. Pursuant to proposed § 1002.107(b), financial institutions would be permitted to rely on statements made by an applicant (whether in writing or orally) or information provided by an applicant when collecting and reporting 1071 data, although for most data points if the financial institution verifies the information provided it must report the verified information. Proposed § 1002.107(c)(2) would also permit financial institutions to reuse certain previously collected data in certain circumstances.

*Firewall (§ 1002.108).* The Bureau is proposing § 1002.108 to implement the requirement in section 1071 that certain data collected be shielded from underwriters and certain other persons; the Bureau refers to this as the ''firewall.'' Pursuant to proposed § 1002.108(b), an employee or officer of a financial institution or a financial institution's affiliate that is involved in making any determination concerning the application would be prohibited from accessing an applicant's responses to inquiries that the financial institution makes pursuant to section 1071 regarding whether the applicant is a minority-owned or women-owned business, and the ethnicity, race, and sex of the applicant's principal owners.

However, pursuant to proposed § 1002.108(c), this prohibition would not apply to an employee or officer if the financial institution determines that it is not feasible to limit that employee's or officer's access to an applicant's

[269] 12 U.S.C. 2801 *et seq.*

[270] The Bureau is proposing that subpart B does not apply to a person excluded from coverage by section 1029 of the Consumer Financial Protection Act of 2010, title X of the Dodd-Frank Wall Street Reform and Consumer Protection Act, Public Law 111–203, 124 Stat. 1376, 2004 (2010).

responses to the financial institution's inquiries regarding the applicant's protected demographic information, and the financial institution provides a notice to the applicant regarding that access. It would not be feasible to limit access if the financial institution determines that an employee or officer involved in making any determination concerning a covered application should have access to one or more applicants' responses to inquiries regarding the applicant's protected demographic information. The notice must be provided to each applicant whose information will be accessed or, alternatively, the financial institution could provide the notice to all applicants whose information could be accessed. The Bureau is proposing sample language that a financial institution could use in providing this notice.

*Reporting data to the Bureau (§ 1002.109).* The Bureau is proposing § 1002.109 to address several aspects of financial institutions' obligations to report section 1071 data to the Bureau. First, the Bureau is proposing in § 1002.109(a) that 1071 data be collected on a calendar year basis and reported to the Bureau on or before June 1 of the following year. The Bureau also addresses collection and reporting requirements of subsidiaries of financial institutions and collection and reporting requirements of financial institutions where multiple financial institutions are involved in a transaction in proposed § 1002.109(a). Second, the Bureau lists in proposed § 1002.109(b) the information that financial institutions would be required to provide about themselves when reporting 1071 data to the Bureau, including the financial institution's name, headquarters address, contact person, Federal prudential regulator, institutional identifiers, and parent entity information. Finally, the Bureau is proposing § 1002.109(c) to address technical instructions for the submission of data to the Bureau, including information about the *Filing Instructions Guide,* which the Bureau anticipates later providing for the appropriate year.

*Publication of 1071 data by the Bureau (§ 1002.110).* The Bureau is proposing in § 1002.110 to address several issues regarding the publication of 1071 data. The Bureau is proposing in § 1002.110(a) that it shall make available to the public, on an annual basis and on the Bureau's website, the data submitted to it by financial institutions. The Bureau is proposing to make these data available subject to deletions or modifications made by the Bureau, at its discretion, if the Bureau determines that such deletions or modifications would advance a privacy interest. To determine whether and how the Bureau might use its discretion to modify or delete data prior to publication, the Bureau is proposing a ''balancing test'' that assesses the risks and benefits of public disclosure. The Bureau's proposed approach to the balancing test is discussed in detail in part VI below. Proposed § 1002.110(b) would state that the Bureau may, at its discretion, compile and aggregate data submitted by financial institutions and may publish such compilations or aggregations.

Proposed § 1002.110(c) would require a covered financial institution to publish on its website a statement that its 1071 data, as modified by the Bureau, are or will be available on the Bureau's website. Proposed § 1002.110(d) would set forth when a covered financial institution shall make this statement available and how long the financial institution shall maintain the statement on its website. These requirements would satisfy financial institutions' statutory obligation to make data available to the public upon request.

*Recordkeeping (§ 1002.111).* The Bureau is proposing § 1002.111 to address several aspects of the recordkeeping requirements for 1071 data. First, the Bureau is proposing § 1002.111(a) to require a covered financial institution to retain evidence of compliance with proposed subpart B, which includes a copy of its small business lending application register, for at least three years after the register is required to be submitted to the Bureau pursuant to proposed § 1002.109. Second, the Bureau is proposing § 1002.111(b) to require a financial institution to maintain, separately from the rest of an application for credit and accompanying information, an applicant's responses to a financial institution's inquiries regarding the applicant's protected demographic information. Finally, the Bureau is proposing § 1002.111(c) to require that, in compiling and maintaining its small business lending application register, a financial institution not include any personally identifiable information concerning any individual who is, or is connected with, an applicant.

4. Other Provisions (§§ 1002.112 Through 1002.114)

*Enforcement (§ 1002.112).* The Bureau is proposing § 1002.112 to address several issues related to the enforcement of proposed subpart B. First, the Bureau is proposing § 1002.112(a) to state that a violation of section 1071 or proposed subpart B is subject to administrative sanctions and civil liability as provided in sections 704 and 706 of ECOA. Second, the Bureau is proposing in § 1002.112(b) to provide that a bona fide error in compiling, maintaining, or reporting data with respect to a covered application is an error that was unintentional and occurred despite the maintenance of procedures reasonably adapted to avoid such an error, and that such an error is presumed not to be a violation of ECOA or proposed subpart B if the number of such errors does not exceed the thresholds set forth in proposed appendix H. Third, the Bureau is proposing in § 1002.112(c) to identify four safe harbors under which certain errors—specifically those regarding census tract, NAICS code, small business status, and application date—would not constitute violations of ECOA or Regulation B.

*Severability (§ 1002.113).* The Bureau is proposing in § 1002.113 to provide that the provisions of proposed subpart B are separate and severable from one another, and that if any provision is stayed or determined to be invalid, it is the Bureau's intent that the remaining provisions shall continue in effect.

*Effective date, compliance date, and special transitional rules (§ 1002.114).* The Bureau is proposing § 1002.114 to address several issues related to the Bureau's eventual final rule to implement section 1071. First, the Bureau is proposing in § 1002.114(a) that its final rule to implement section 1071 would become effective 90 days after publication in the **Federal Register**, but pursuant to proposed § 1002.114(b) compliance with the final rule would not be required until approximately 18 months after publication in the **Federal Register**. Second, the Bureau is proposing in § 1002.114(c) certain transitional provisions that would permit covered financial institutions to begin collecting protected applicants' demographic information beginning 12 months prior to the compliance date and would permit financial institutions to use a different time period to determine whether they will be covered by the rule as of the compliance date.

*D. High-Level and General Comments on the SBREFA Outline*

During the SBREFA process, SERs provided feedback on nearly all aspects of the Bureau's proposals under consideration as set forth in the SBREFA Outline. Other stakeholders did likewise in their written feedback on the SBREFA Outline. That feedback

is discussed in the section-by-section analyses of the proposed rule below. SERs and other stakeholders also provided feedback of a more general nature on the Bureau's section 1071 rulemaking. That feedback is summarized here; the SBREFA Panel Report provides a more complete summary of the SBREFA process and comments provided by SERs.[271]

Most SERs and stakeholders were generally supportive of the statutory purposes of section 1071.[272] Several SERs as well as a range of other stakeholders—including community groups, CDFIs, several community banks, and a State consumer financial protection agency—were supportive of the Bureau's statutory mandate to promulgate a section 1071 rule. Many stakeholders, including community groups, several CDFI banks, and a small community bank, expressly supported broad coverage of both financial institutions and products in the 1071 rulemaking. One community bank stakeholder stated that larger financial institutions should not be excluded; another community bank asserted that a 1071 rule should cover credit unions, governmental entities, commercial finance firms, and alternative online lenders.

Several trade association stakeholders supported a more limited approach to implementation of a 1071 rulemaking. A number of trade associations requested exemptions for the specific types of financial institutions they represented, including credit unions, vendor finance and dealer-related institutions, and community banks. One trade association argued that Federal credit union laws limited the extent to which credit unions could seek to expand their small business lending operations. Two trade association stakeholders suggested that the Bureau adopt a phased or staged approach to implementation, starting only with certain products and institutions. One trade association suggested that the Bureau adopt a high size-based exemption for institutions.

A number of SERs and stakeholders, including several CDFIs, a number of community groups and a community bank, expressed the view that data transparency in the small business lending market is critical to advance the goals of fair lending enforcement and access to credit for small businesses, especially those that are minority-owned and women-owned. One SER and several stakeholders, including two community groups and one small business trade association, stated that the limited data currently available show that the lending practices of many financial institutions exclude women-owned and minority-owned businesses, exacerbating a racial wealth gap, and that section 1071 has the opportunity to address such lending disparities, which are costly to businesses, lenders, and the economy as a whole. The SER also said that data transparency and fairness should be an advantage to smaller, local financial institutions, allowing them to better distinguish their value proposition compared to larger financial institutions or predatory lenders.[273] A CDFI stakeholder and a community group stakeholder emphasized that 1071 data would be an important supplement to CRA and HMDA data to determine community development needs. Another community group stakeholder and a small business trade association emphasized the importance of supporting access to credit for women-owned and minority-owned small businesses. One community group argued that the availability of 1071 data would spur innovation in the small business lending market.

Several SERs and several community groups and CDFI stakeholders stated that the completion of a 1071 rulemaking was welcome, given the many years stakeholders have been waiting for these data. Several SERs and other stakeholders, including community groups and CDFIs, supported a 1071 rulemaking as necessary to better understand the small business lending market, as the COVID–19 pandemic highlighted how the most vulnerable small businesses can be disproportionately impacted by economic shocks. Several community groups and a small business trade association stakeholders argued that the response to the COVID–19 pandemic, including the PPP program, exacerbated existing gender and racial disparities, and did not provide access to credit to excluded lower- and middle-income communities and women-owned or minority-owned small businesses. Two community bank trade associations noted the outsized importance of community banks and CDFIs in providing PPP loans to their local communities, including to minority-owned small businesses, and warned that an unintended consequence of a 1071 rulemaking may be to impair this existing lending. One trade association suggested that the Bureau delay issuing any proposal until the economic forces driven by the COVID–19 pandemic have subsided and recovery is evident.

Other stakeholders expressed concerns about the uses of data coming from a 1071 rulemaking. One trade association suggested that the collection of data on race and gender would create the perception among customers that these factors played a role in credit decisions. One community bank stakeholder asserted that 1071 data should not be used in regulatory oversight or examinations of financial institutions, but rather to better understand the small lending market and help regulators support lending. Several trade associations expressed concerns that misleading conclusions could be drawn from data from a 1071 rulemaking, and that small business lending was complex and varied.

SERs nearly uniformly suggested that the Bureau aim to draft simple regulations, and choose simpler options if possible, noting that more complex rules tend to make compliance more difficult and drive up compliance costs, which could potentially increase prices or reduce small businesses' access to credit. A number of stakeholders—including community banks, community groups, a small business trade association, and bank and credit union trade associations—similarly supported simple and clear regulations and requested that the Bureau avoid complex or ambiguous rules, which they asserted would make compliance more costly. One CDFI bank stakeholder asserted that existing ambiguities and conflicts in the law have caused financial institutions to avoid collecting the very data they would need to identify lending discrimination, and that mandating data collection and clarifying rules would be critical to addressing these concerns.

Many SERs and a community bank stakeholder requested clear written guidance and implementation support materials from the Bureau, such as small entity compliance guides, a ''help desk'' for questions, and sample disclosure language (translated into languages other than English for individuals with limited English proficiency). Several SERs also discussed the need for applicant-facing materials explaining what the section 1071 regulation is and why the financial institution must collect data. Relatedly, one SER requested that the Bureau educate and train currently unregulated financial institutions to help them implement the rule.

A number of SERs (representing financial institutions that operate primarily online as well as financial institutions that interact with small business applicants in-person) indicated their belief that financial institutions

[271] *See generally* SBREFA Panel Report.

[272] The SER feedback discussed herein can be found in the SBREFA Panel Report at 17–18.

[273] *Id.*

with extensive online lending operations would be able to comply with an eventual 1071 rule more easily, more quickly, and at lower cost due to their greater degree of automation than financial institutions with primarily in-person and/or paper-based operations. SERs and several stakeholders (including a community bank trade association, a community group, and a community bank) urged the Bureau to align with other Federal data reporting regimes—such as HMDA, CRA, CDFI Fund, or SBA—if possible, and thought that financial institutions with experience complying with these other Federal data reporting regimes would have an easier time complying with an eventual 1071 rule than would financial institutions, including some SERs, with no such experience. One trade association suggested that any comparisons with HMDA were misplaced, as the small business lending market is more varied and complex than the market for residential mortgage lending.

Several SERs stated that a 1071 rule should take into account the different types of financial institutions operating in the small business lending market. One SER suggested that the Bureau had not focused enough attention on the impact of a 1071 rule on nondepository institutions, which they said play a vital role in providing essential credit to small businesses in the United States, many of which are women-owned and minority-owned. Another SER and two trade associations asserted that the data collected from credit unions, which are bound by their charters (pursuant to Federal and State laws and regulations) to serve a specific field of membership, would likely be incomparable with data from other financial institutions that are permitted to serve any kind of customer.

Many SERs supported broad coverage of both financial institutions and products, as reflected in section 1071's language covering any application to a financial institution for credit for a women-owned, minority-owned, or small business.

The SBREFA Panel recommended that the Bureau issue implementation and guidance materials (including a small entity compliance guide as required by the RFA, as well as other materials), specifically to assist small financial institutions in complying with the eventual 1071 rule.[274] The Panel also recommended that the Bureau consider providing sample disclosure language related to the collection of ethnicity, race, and sex of applicants.[275]

The Bureau agrees with the general comments made in favor of keeping the scope of the proposed rule broad. In general, the Bureau believes that broad coverage of institutions and products as requested by a number of SERs and stakeholders would result in the collection of more data and would be consistent with the statutory purposes of section 1071. The Bureau does not believe that the request made by several trade association stakeholders to take a more limited approach to scope—including the various limitations on the coverage of certain types of financial institutions and products—would be consistent with the statutory purposes of section 1071. The Bureau addresses these issues directly in the section-by-section analyses of proposed §§ 1002.104 and 1002.105 below.

The Bureau agrees with the SERs and stakeholders that expressed the view that data transparency in the small business lending market is critical to advancing the statutory purposes of section 1071. The Bureau believes that the limited data that do exist, cited by one SER and several stakeholders, appear to support the existence of disparities in the small business lending markets, as identified in part II above. The Bureau agrees—as do other Federal regulators that the Bureau has consulted in developing this proposed rule—that 1071 data would be an important supplementation to CRA and HMDA data in helping a variety of parties determine and address business and community development needs. The Bureau agrees with the SERs and stakeholders that identified specific ways that the publication of 1071 data would advance this statutory purpose in helping the public identify business needs, including, as one SER suggested, creating data that would be useful to help smaller, local financial institutions distinguish their value proposition compared to other lenders, and could be used to spur innovation in the small business lending market.

Regarding the support of certain SERs and other stakeholders welcoming the completion of a 1071 rulemaking, the Bureau's views on this are best expressed in the section-by-section analyses of proposed §§ 1002.113 and 1002.114 concerning effective date and compliance date. Regarding the data cited by SERs and other stakeholders concerning lending disparities in the PPP program during the COVID–19 pandemic, the Bureau believes that the availability of data on PPP lending further supports the importance of collecting and publishing 1071 data; it was only the existence of PPP lending data, despite its limitations, that enabled these stakeholders to make arguments regarding the state of fair lending and business and community development under PPP.

The Bureau appreciates the concerns expressed by some stakeholders concerning the uses of 1071 data. The Bureau believes that the firewall provision of proposed § 1002.108, including the proposed notice provision, are intended to address the concern by one trade association stakeholder that the collection of ethnicity, race, and sex data may create the perception among customers that these factors play a role in credit decisions. The Bureau disagrees with the stakeholder that asserted that 1071 data should not be used in regulatory oversight or examinations. Such use is contemplated by ECOA section 704B(a)(2), which provides that the data are intended to facilitate the enforcement of fair lending laws. The Bureau does agree with the same stakeholder, however, that 1071 data should be used to help regulators better understand the small business lending markets and better support such lending. The Bureau does not disagree in the abstract with the assertions made by several trade associations that misleading conclusions could be drawn from 1071 data; the Bureau notes that these stakeholders did not cite any examples and that any source of data may be misinterpreted absent robust procedures and methodologies. The Bureau believes, given its experience with HMDA data, that such concerns are misplaced—overall, HMDA data have helped shed light on previously hidden issues and proven highly effective in accomplishing its congressionally mandated purposes.

The Bureau has attempted as much as possible to propose rules that are both simple and clear, as SERs and other stakeholders suggested. For instance, the Bureau is proposing a simple definition of small business in proposed § 1002.106 below. While the Bureau has endeavored to avoid unnecessary ambiguity and complexity in its proposed rule, complexity in the proposed rule reflects the inherent complexity of the subject, including the variations and diversity in the small business lending market as well as the complications of collecting data to conduct fair lending analyses and identify business and community development needs.

Regarding the request for clear written guidance and implementation support materials, the Bureau intends to develop various compliance materials, as it does with most major rules. These materials will include a small entity compliance

[274] *Id.* at 43.

[275] *Id.*

guide that will provide regulatory implementation guidance, and a *Filing Instructions Guide* that will provide technical instructions for the submission of 1071 data to the Bureau. With regard to the comment that the Bureau should provide applicant-facing materials, the Bureau proposes in appendix E a sample data collection form that can be used to collect from applicants their minority-owned business status, women-owned business status, and the ethnicity, race, and sex of their principal owners, along with the related required disclosures.

The Bureau generally agrees with the observation of a number SERs that financial institutions with extensive online lending operations would likely find compliance with a section 1071 rule easier than those with primarily in-person operations. The Bureau sets out its preliminary assessment of the costs of the rule on financial institutions in parts VII and VIII below.

The Bureau has attempted, whenever possible, to align or conform its proposed rule with other Federal data reporting regimes, as several SERs and other stakeholders requested. The Bureau references and, where possible, aligns the proposed rule with specific Federal data reporting regimes, as explained in the section-by-section analyses below. The Bureau appreciates the comments made by some SERs and other stakeholders that there are different types of financial institutions in the small business lending market and that the differences between institutional types may complicate data analysis. The Bureau notes, however, that simply excluding certain types of institutions from 1071 reporting requirements would be inconsistent with the statutory purposes of section 1071, and that it would be more congruent with section 1071 instead to collect information on financial institution type as set out in proposed § 1002.109(b)(9), for the reasons set out below.

*E. Cross-Cutting Interpretive Issues*

1. The Bureau's Approach to Non-Small Women-Owned and Minority-Owned Businesses in This Rulemaking

The Bureau is proposing to require financial institutions to collect and report data regarding applications for credit for small businesses; the Bureau is not, however, proposing to require financial institutions to collect and report data with respect to applicants that are *not* small businesses. ECOA section 704B(b) states that ''in the case of any application to a financial institution for credit for [a] women-owned, minority-owned, or small business,'' the financial institution must ''inquire whether the business is a women-owned, minority-owned or small business . . . .'' For the reasons set forth below, the Bureau is proposing this approach as an interpretation of the statute pursuant to its authority under 704B(g)(1), and, in the alternative, pursuant to its authority under 704B(g)(2) to adopt exceptions to any requirement of section 1071 as the Bureau deems necessary or appropriate to carry out the purposes of section 1071 and its implied *de minimis* authority.

The Bureau explained in the SBREFA Outline that in light of the comprehensive coverage of women-owned and minority-owned businesses within the scope of small businesses (discussed in more detail below), it was considering proposing that the data collection and reporting requirements of its eventual 1071 rule would apply to any application to a financial institution for credit only for small businesses as defined under the eventual 1071 rule.[276] The Bureau explained that it was concerned that a requirement to collect and report 1071 data on applications for women-owned and minority-owned businesses that are not small businesses could affect all aspects of financial institutions' commercial lending operations while resulting in limited information beyond what would already be collected and reported about women-owned and minority-owned small businesses. In addition, financing for large businesses can be much more varied and complex than are the products used for small business lending. Thus, under the approach the Bureau was considering proposing, financial institutions would collect and report lending data for all applicants that satisfy the Bureau's definition of a small business, including identifying women-owned and minority-owned businesses within that pool, but financial institutions would not be required to collect and report 1071 data for women-owned and minority-owned businesses that are not ''small.''

In the SBREFA Outline, the Bureau noted that most existing businesses, including almost all women-owned and minority-owned businesses, are ''small business concerns'' as that term is currently defined by the SBA.[277] Therefore, the Bureau posited that coverage of small businesses by this rule would necessarily include nearly all women-owned and minority-owned businesses. Based on the 2018 Annual Business Survey by the U.S. Census, the Bureau estimated that 5.72 million employer firms—99.6 percent of all employer firms—are small (defined for the purposes of the survey as having fewer than 500 employees). That same definition covers one million minority-owned employer firms (99.9 percent of all minority-owned firms) and 1.1 million women-owned employer firms (99.9 percent of all women-owned firms).[278] The Bureau estimated that, among non-small businesses, which are only 0.4 percent of all firms nationally, 10 percent of this small fraction are minority-owned firms and 13 percent are women-owned.[279]

A number of SERs expressed a belief that covering just small business applications would supply adequate or nearly complete lending data for purposes of section 1071.[280] However, other SERs stated that the Bureau's regulation should collect data regarding applications for credit for non-small minority-owned and women-owned businesses as well. One SER relayed first-hand observations in their community that larger minority-owned and women-owned businesses were excluded from full access to credit, and expressed an interest in the Bureau capturing and reporting that information. One SER observed that smaller financial institutions, or those that generally focus on small business lending, might find that collecting and reporting data for all business loan applications would be simpler than determining which applications would be within the scope of the eventual 1071 rule.

The SBREFA Panel recommended that the Bureau continue to explore whether the data collection and reporting requirements in its 1071 rule should be limited to any application to a financial institution for credit only for small businesses (as defined by the Bureau's regulation) or whether it should also extend to applications for women-owned and minority-owned businesses that are not small.[281] The Panel also recommended that the Bureau seek comment on the costs to small financial institutions of collecting and reporting 1071 data regarding applications for credit for women-owned and minority-owned businesses

[276] SBREFA Outline at 9.

[277] See the section-by-section analysis of proposed § 1002.106 below for additional discussion regarding the definition of ''small business'' for purposes of this rulemaking.

[278] SBREFA Outline at 9.

[279] *Id.*

[280] The SER feedback discussed in herein can be found in the SBREFA Panel Report at 18.

[281] *Id.* at 43.

that are not small (as defined by the Bureau's regulation).[282]

Feedback from other stakeholders generally supported the Bureau's approach to limiting 1071 data collection to small businesses, including identifying women- and minority-owned businesses within that pool. A number of commenters expressed support for the Bureau's approach under consideration, arguing that requiring data collection for non-small women- and minority-owned businesses would increase compliance burden without significantly contributing to 1071's purposes. Some responses also stated that this approach was consistent with legislative intent, positing that Congress did not intend for financial institutions to collect 1071 data on large companies. A community group noted that its support for the Bureau's approach was conditional on the Bureau adopting a broad definition of small business, thus limiting the likelihood of missing significant women- and minority-owned business application data. A joint comment from a number of community groups urged the Bureau to monitor the market and to reevaluate this approach if later publications of the Annual Business Survey show that the number of non-small women- and minority-owned businesses exceed current estimates. Another joint comment from community groups did not support the Bureau's approach under consideration, urging the Bureau to consider instead covering non-small women- and minority-owned businesses in the data collection and arguing that it might be easier for financial institutions to collect data for all applicants, as opposed to developing systems for screening out applicants that are not covered. Two banks suggested that 1071 data collection should extend to all businesses; one was concerned about fair lending disparities, while the other remarked that large business applicants should not be relieved of the burden of having their data collected under 1071.

The Bureau believes that section 1071 is ambiguous with respect to its coverage of applications for credit for non-small women- or minority-owned businesses, and the Bureau therefore proposes to interpret this ambiguity pursuant to ECOA section 704B(g)(1). The Bureau acknowledges that the plain language of 704B(b) could be read to require financial institutions to collect information from all women-owned and minority-owned businesses, including those that are not small businesses. But based on a close consideration of the text, structure, and purpose of the statute, and the interactions between section 1071 and other provisions of ECOA and Regulation B, the Bureau believes that the statute's coverage of, and Congress's intent with respect to, data regarding non-small businesses is ambiguous.

The Bureau interprets ECOA section 704B(b) and (b)(1) to require that financial institutions first determine whether an applicant is a small business within the scope of the rule's data collection before making the required inquiries that would otherwise be prohibited by existing Regulation B. There is a general prohibition in existing Regulation B (in § 1002.5(b)) which states that a ''creditor shall not *inquire* about the race, color, religion, national origin, or sex of an applicant or any other person in connection with a credit transaction, except'' if expressly permitted to do so by law or regulation.

In the introductory language to ECOA section 704B(b), Congress instructed that the 1071 data collection regime applies only ''*in the case of* any application to a financial institution for credit for women-owned, minority-owned, or small business'' (emphasis added). The Bureau believes that ''in the case of'' indicates Congress's intent to limit application of section 1071 to these types of businesses, rather than requiring financial institutions to make 1071-related inquiries of all business applicants for credit.[283] The next paragraph (704B(b)(1)) does not use the conditional phrase ''in the case of'' used in 704B(b); rather, it instructs a financial institution to ''inquire.'' The Bureau believes that the instruction to ''inquire'' in 704B(b)(1) is intended to provide the necessary exception to Regulation B's general prohibition against ''inquir[ing]'' as to protected demographic information in connection with a credit transaction.[284] Indeed, absent section 1071's lifting of the prohibition, generally, a financial institution could not determine, or even ask about, an applicant's women- or minority-owned status, because doing so would necessarily constitute ''inquir[ing] about the race, color, religion, national origin, or sex of an applicant'' in violation of existing § 1002.5(b). The Bureau believes that Congress likely intended to ensure that financial institutions could determine whether an applicant is covered by the 1071 data collection without risking a violation of other provisions of ECOA and Regulation B.

However, unlike with women- and minority-owned business status, there is no legal impediment to a financial institution's determining whether an applicant is a small business, and financial institutions can make that determination as a threshold matter without risking running afoul of ECOA and Regulation B. Therefore, the Bureau believes that the scope of the introductory ''in the case of'' language in ECOA section 704(b) is ambiguous as to coverage of non-small women- and minority-owned businesses. To resolve this ambiguity, the Bureau has applied its expertise to interpreting the language and structure of 1071 within the context of the general prohibition on inquiring into protected demographic information in existing § 1002.5(b), and concludes that ECOA section 704B(b)(1) is best read as only referring to questions about applicants' protected demographic information (*i.e.,* women- and minority-owned business status as well as the race, sex, and ethnicity of the principal owners of the business). The Bureau believes 704B(b)'s more general ''in the case of'' language should be understood to indicate the conditions under which 1071 data collection should take place, and requires financial institutions to make a threshold determination that an applicant is a small business before proceeding with an inquiry into the applicant's protected demographic information.

The Bureau also notes that the collection of data on applications for non-small women- or minority-owned businesses would not carry out either of section 1071's stated purposes because the data would be of only limited usefulness for conducting the relevant analyses of non-small businesses. Such analyses would necessitate comparing data regarding non-small women-owned and minority-owned business applicants to data regarding non-small non-women-owned and non-minority-owned business applicants, in order to control for lending outcomes that result from differences in applicant size. But section 1071 does not require or otherwise address the collection of data for non-small business applicants that

[282] *Id.*

[283] Merriam-Webster defines ''case'' as meaning ''a set of circumstances or conditions,'' ''a situation requiring investigation or action (as by the police),'' or ''the object of investigation or consideration.''

[284] As discussed in greater detail in the next section, the fact that the language of ECOA section 704B(b)(1) is designed to expressly permit inquiry into protected demographic information, which would otherwise be prohibited by existing § 1002.5(b), is also evidenced by the statute's three provisions creating special protections for responses to the inquiry: 704B(b)(2) requires that responses to protected inquiries remain separate from the application and accompanying information; 704B(c) requires that applicants have a right to refuse to answer the protected inquiry; and 704B(d) requires that certain underwriters or other employees involved in making determinations on an application not have access to the responses to protected inquiries.

are not women- or minority-owned. Therefore, the resulting data set will lack a control group, arguably the most meaningful comparator for any data on non-small women- or minority-owned businesses. It is unlikely that Congress intended, and the statute is reasonably read not to require, the collection of data that would be of limited utility.[285]

Finally, the Bureau notes that the title of section 1071 is ''Small Business Data Collection,'' and 1071 amends ECOA to add a new section titled ''Small Business Loan Data Collection.'' In the presence of ambiguity, these titles provide some additional evidence that Congress did not intend the statute to authorize the collection of data on businesses that are not small.[286]

For these reasons, the Bureau proposes to interpret ECOA section 704B(b) to cover the collection only of data with respect to small businesses, including those that are women- and minority-owned. Likewise, as discussed immediately below in E.2 of this *Overview* to part V, the Bureau is proposing to clarify that the 704B(b)(1) inquiry, when applicable, pertains to an applicant's minority-owned business status and women-owned business status as well as the race, sex, and ethnicity of its principal owners. For the same reasons, the Bureau believes that not requiring the collection of data with respect to applications for non-small businesses would be necessary or appropriate to carry out the purposes of section 1071; therefore, in the alternative, the Bureau proposes to exercise its exception authority in 704B(g)(2) to effect this outcome. Finally, because the Bureau believes that the collection of data on non-small women- and minority-owned businesses would ''yield a gain of trivial or no value,'' the Bureau proposes, in the alternative, to exercise its implied *de minimis* authority to create this exception.[287]

The Bureau seeks comment on its proposed approach to limiting the scope of data collection pursuant to subpart B to covered applications for small businesses, but not women- or minority-owned businesses that are not small. As recommended by the SBREFA Panel, the Bureau also seeks comment on the costs to small financial institutions of collecting and reporting 1071 data regarding applications for credit for women-owned and minority-owned businesses that are not small businesses as defined in proposed § 1002.106(b). See the section-by-section analysis of proposed § 1002.106(b) below, where the Bureau is seeking comment on the proposed definition of a small business.

2. The Meaning of ''information requested pursuant to subsection (b)''

Four different provisions of section 1071 refer to or rely on ''information requested pursuant to subsection (b)'' or similar language. First, ECOA section 704B(b)(2) provides that financial institutions must ''maintain a record of the responses to such inquiry'' and keep those records separate from the application and information that accompanies it. Second, 704B(c) states that applicants for credit ''may refuse to provide any information requested pursuant to subsection (b).'' Third, 704B(d) requires financial institutions to limit the access of certain employees to ''information provided by the applicant pursuant to a request under subsection (b),'' with certain exceptions. Fourth, 704B(e) instructs financial institutions that ''information provided by any loan applicant pursuant to a request under subsection (b) . . . shall be itemized in order to clearly and conspicuously disclose'' data including the loan type and purpose, amount of credit applied for and approved, and gross annual revenue.

In light of these four disparate provisions, the Bureau believes that section 1071 is ambiguous with respect to the meaning of ''any information provided by the applicant pursuant to a request under subsection (b).''[288] On the one hand, ECOA section 704B(b)(1) directs financial institutions to inquire whether a business is ''a women-owned, minority-owned, or small business,'' so the phrase could be interpreted as referring only to those three data points. Section 704B(e), however, indicates that the scope of 704B(b) could be much broader; it suggests that all of the information that financial institutions are required to compile and maintain—not simply an applicant's status as a women-owned, minority-owned, or small business—constitutes information provided by an applicant ''pursuant to a request under subsection (b).'' But as noted above, information deemed provided pursuant to subsection (b) is subject to the notable protections of separate recordkeeping under 704B(b)(2), a right to refuse under 704B(c), and the firewall under 704B(d). Applying these special protections to many of the data points in 704B(e), such as gross annual revenue or amount applied for, would be extremely difficult to implement, because this information is critical to financial institutions' ordinary operations in making credit decisions. Additionally, 704B(e) describes as ''provided by any loan applicant'' under 704B(b) data points that plainly must come from the financial institution itself, such as application number and action taken, further suggesting that Congress viewed this term as encompassing more information than lies within the four corners of 704B(b)(1). Finally, as noted above, the circular structure of 704B(b) complicates the question of what constitutes information provided ''pursuant to a request under subsection (b).'' Read together, the introductory language in 704B(b) and (b)(1) direct financial institutions, ''in the case of'' a credit application ''for [1] women-owned, [2] minority-owned, or [3] small business,'' to ''inquire whether the business is a [1] women-owned, [2] minority-owned, or [3] small business.'' The Bureau believes that this circularity further demonstrates the ambiguity of the phrase ''pursuant to a request under subsection (b).''

The Bureau believes that it is reasonable to resolve these ambiguities by giving different meanings to the phrase ''any information provided by the applicant pursuant to a request under subsection (b)'' (or similar) with respect to ECOA section 704B(e) as opposed to 704B(b)(2), (c), and (d).[289] With respect to 704B(e), the Bureau interprets the phrase to refer to all the data points now articulated in proposed § 1002.107(a). Section 704B(e) is the source of financial institutions' obligation to ''compile and maintain'' data that they must then submit to the

[285] *See, e.g., Pub. Citizen* v. *U.S. Dep't of Just.,* 491 U.S. 440, 454 (1989) (''Where the literal reading of a statutory term would 'compel an odd result,' *Green* v. *Bock Laundry Machine Co.,* 490 U.S. 504, 509 (1989), we must search for other evidence of congressional intent to lend the term its proper scope.'').

[286] *Almendarez-Torres* v. *United States,* 523 U.S. 224, 234 (1998) (''[T]he title of a statute and the heading of a section' are 'tools available for the resolution of a doubt' about the meaning of a statute.'') (quoting *Bhd. of R.R. Trainmen* v. *Balt. & Ohio R.R.,* 331 U.S. 519, 529 (1947)).

[287] *Waterkeeper All.* v. *EPA,* 853 F.3d 527, 530 (D.C. Cir. 2017) (quoting *Pub. Citizen* v. *FTC,* 869 F.2d 1541, 1556 (D.C. Cir. 1989)); *see Alabama Power Co.* v. *Costle,* 636 F.2d 323, 360–61 (D.C. Cir. 1979).

[288] The Bureau does not believe that the minor linguistic variations in these four provisions themselves have significance.

[289] While there is a presumption that a phrase appearing in multiple parts of a statute has the same meaning in each, ''this is no more than a presumption. It can be rebutted by evidence that Congress intended the words to be interpreted differently in each section, or to leave a gap for the agency to fill.'' *Catskill Mountains Chapter of Trout Unlimited, Inc.* v. *EPA,* 846 F.3d 492, 532 (2d Cir. 2017) (citing *Env't Def.* v. *Duke Energy Corp.,* 549 U.S. 561, 575 (2007)). Here, the Bureau believes Congress indicated such an intention by using the same phrase in the substantially different contexts of providing special protections for sensitive demographic information on the one hand and ''itemiz[ing]'' all collected data on the other.

Bureau, so it would be reasonable to interpret this paragraph as referring to the complete data collection Congress devised in enacting section 1071.

But with respect to the three statutory provisions creating special protections for certain information—the firewall in ECOA section 704B(d), separate recordkeeping in 704B(b)(2), and the right to refuse in 704B(c)—the Bureau interprets the phrase to refer to the data points in proposed § 1002.107(a)(18) (women-owned business status), (a)(19) (minority-owned business status), and (a)(20) (ethnicity, race, and sex of principal owners).[290] Each of these data points requests sensitive demographic information that has no bearing on the creditworthiness of the applicant, about which existing § 1002.5(b) would generally prohibit the financial institution from inquiring absent section 1071's mandate to collect and report that information, and with respect to which applicants are protected from discrimination. The Bureau accordingly believes that it would be reasonable to apply section 1071's special-protection provisions to apply to this information, regardless of whether the statutory authority to collect it originates in 704B(b)(1) (women-owned and minority-owned business status) or 704B(e)(2)(G) (race, sex, and ethnicity of principal owners). The Bureau similarly believes that it would have been unreasonable for Congress to have intended that these special protections would apply to any of the other data points now proposed in § 1002.107(a), which the financial institution is permitted to request regardless of coverage under section 1071 which are not the subject of Federal antidiscrimination law, and many of which financial institutions currently use for underwriting purposes.

The Bureau implements these interpretations of ''information requested pursuant to subsection (b)'' in several different section-by-section discussions. With respect to ECOA section 704B(e), the Bureau discusses its interpretation of the phrase in the section-by-section analysis of proposed § 1002.107(a). The Bureau's interpretation of 704B(d)'s firewall requirement is addressed at greater length in the section-by-section analysis of proposed § 1002.108, and the Bureau's interpretation of the separate recordkeeping requirement in 704B(b)(2) is addressed in the section-by-section analysis of proposed § 1002.111(b). The right to refuse in 704B(c) is discussed in the section-by-section analyses of the data points that the Bureau proposes to be subject to the right to refuse: Proposed § 1002.107(a)(18) (women-owned business status), (19) (minority-owned business status), and (20) (ethnicity, race, and sex of principal owners).

3. No Collection of Small Business Status as a Data Point

The Bureau notes that neither of its interpretations of ''information requested pursuant to subsection (b)'' reference a specific data point for an applicant's status as a small business, nor is the Bureau otherwise including in proposed § 1002.107(a) that financial institutions collect, maintain, or submit a data point whose sole function is to state whether the applicant is or is not a small business.

At SBREFA, the Bureau conveyed that it was considering proposing small business status as a separate data point. The Bureau also stated that it was considering not proposing to extend the right to refuse or firewall to a financial institution's specific inquiry regarding small business status;[291] the Bureau did not address in the SBREFA Outline whether small business status would be subject to the separate recordkeeping requirement. In lieu of further details about the potential data point on small business status, the Bureau noted that it was considering proposing that collection and reporting of whether an applicant for credit is a small business be based on applicant-reported information, but that the precise nature of the data point would depend on the ultimate definition of small business.

As discussed below in the section-by-section analysis of proposed § 1002.106(b), the Bureau is now proposing a definition of small business that largely adopts the SBREFA Outline's First Alternative Approach with a threshold of $5 million. After considering the implications of this approach, the Bureau now believes that it would render redundant any requirement that financial institutions also collect a standalone data point whose sole purpose is to state whether an applicant is a small business, because the gross annual revenue data point wholly encompasses whether an applicant is a small business. Indeed, under the proposed definition of small business, when a financial institution asks an applicant its gross annual revenue, that question is functionally identical to asking, ''are you a small business?'' The Bureau believes that it would be a reasonable interpretation of ECOA section 704B(b)'s query as to small business status for that question to take the form of, ''what is your gross annual revenue?'' Furthermore, as discussed above with respect to the Bureau's approach to non-small women- and minority-owned businesses, the Bureau is interpreting financial institutions' data collection obligations as attaching only in the case of applications from small businesses; if a financial institution determines that an applicant is not a small business, none of the obligations under this rule would apply. As such, a standalone data point that serves only to designate whether a business qualifies as small for purposes of the rule would be redundant with the mere fact that the 1071 data collection occurs at all, as well as with the collection of gross annual revenue.

The Bureau acknowledges that the plain language of ECOA section 704B(b) could be read to require financial institutions to ask applicants subject to the data collection the precise question, ''are you a small business?'' Upon further analysis, however, the Bureau believes that Congress's intended treatment of small business status as a standalone data point is ambiguous. As described in more detail above with respect to the rulemaking's coverage of women- and minority-owned businesses that are not small, 704B(b)'s introductory language and 704B(b)(1) appear to require financial institutions to know the answer to whether an applicant is women-owned, minority-owned, or small before they make their inquiry; to resolve this ambiguity, the Bureau interprets 704B(b)'s introductory language and 704B(b)(1) to require that financial institutions first straightforwardly assess whether an applicant is a small business before proceeding to inquire into the applicant's protected demographic information that would otherwise be prohibited by existing § 1002.5(b).

In sum, pursuant to its authority under ECOA section 704B(g)(1) to prescribe such rules as may be necessary to carry out, enforce, and compile data pursuant to section 1071, the Bureau interprets 704B(b) and (b)(1) to obviate the need for financial institutions to collect a standalone data point whose sole purpose is to note an applicant's small business status. For the same reasons, the Bureau believes that not requiring the collection of a separate data point on small business status would be necessary or appropriate to carry out the purposes of section 1071; therefore, in the alternative, the Bureau proposes to exercise its exception authority in 704B(g)(2) to effect this outcome.

[290] The Bureau's interpretations with respect to a separate data point for small business status are discussed in the next section.

[291] SBREFA Outline at 25.

Finally, because the Bureau believes that the collection of a standalone data point on small business status would ''yield a gain of trivial or no value,'' the Bureau proposes, in the alternative, to exercise its implied *de minimis* authority to create this exception.[292]

In light of the above, the Bureau seeks comment on whether a standalone data point solely dedicated to small business status might nonetheless be useful and, if so, how it might be implemented.

*F. Conforming Amendments to Existing Regulation B*

As discussed above, the Bureau is proposing to implement its section 1071 rule in a new subpart B of Regulation B. The content of existing Regulation B would become subpart A of Regulation B. This change would not affect the current section numbering in Regulation B. The Bureau believes it is appropriate to make this rule a part of Regulation B, as section 1071 is a part of ECOA. Nonetheless, the Bureau seeks comment on whether it should instead codify its section 1071 rule as a free-standing regulation with its own CFR part and, if so, why.

As noted above and as discussed in more detail below, the Bureau is proposing amendments to amend existing § 1002.5(a)(4) and associated commentary to expressly permit voluntary collection of minority-owned business status, women-owned business status, and the race, sex, and ethnicity of applicants' principal owners in accordance with the requirements of subpart B. In addition, the Bureau anticipates revising certain references to the entire regulation (which use the terms ''regulation'' or ''part'') in existing Regulation B to instead refer specifically to subpart A. The Bureau does not intend to make any substantive changes with these revisions, but rather intends to maintain the status quo.

Subpart A—General

Section 1002.5 Rules Concerning Requests for Information

5(a) General Rules

5(a)(4) Other Permissible Collection of Information

Background

ECOA prohibits creditors from discriminating against applicants, with respect to any aspect of a credit transaction, on the basis of—among other things—race, color, religion, national origin, sex or marital status, or age.[293] It also states that making an inquiry under 15 U.S.C. 1691c–2 (that is, section 1071), in accordance with the requirements of that section, shall not constitute discrimination for purposes of ECOA.[294] Regulation B, in existing § 1002.5(b), generally prohibits a creditor from inquiring about protected demographic information in connection with a credit transaction unless otherwise required by Regulation B, ECOA, or other Federal law or regulation.[295]

In 2017, the Bureau amended Regulation B, adding § 1002.5(a)(4) to allow creditors to collect ethnicity, race, and sex from mortgage applicants in certain cases where the creditor is not required to report under HMDA and Regulation C.[296] As part of this rulemaking, the Bureau added § 1002.5(a)(4) to expressly permit the collection of ethnicity, race, and sex information from mortgage applicants in certain cases where the creditor is not required to report under HMDA and Regulation C. For example, existing § 1002.5(a)(4) expressly permits the collection of ethnicity, race, and sex information for certain transactions for which Regulation C permits optional reporting. However, nothing in existing Regulation B (or in ECOA) expressly permits voluntary collection and reporting of information regarding the ethnicity, race, and sex of applicants' principal owners, or whether the applicant is a minority-owned business or women-owned business, under section 1071.

SBREFA Proposal Under Consideration and Feedback Received

During the SBREFA process, some SERs, primarily small CDFIs and mission-oriented community banks, stated that they would be inclined to collect and report 1071 data to the Bureau even if not required to do so, such as if they fell under loan-volume thresholds. These SERs expressed an intent to report data even if not required to out of a belief in the importance and utility of 1071 data.

Proposed Rule

The Bureau is proposing to amend existing § 1002.5(a)(4) to add three exemptions (in proposed § 1002.5(a)(4)(vii), (viii), and (ix)) that would permit certain creditors that are not covered financial institutions under the rule to collect small business applicants' protected demographic information under certain circumstances. The Bureau is also proposing to add comment 5(a)(2)–4 and to revise existing comment 5(a)(4)–1 to provide guidance on these proposed exemptions.

Proposed § 1002.5(a)(4)(vii) would provide that a creditor that was required to report small business lending data pursuant to proposed § 1002.109 for any of the preceding five calendar years but is not currently a covered financial institution under proposed § 1002.105(b) may collect information pursuant to proposed subpart B for a covered application as defined in proposed § 1002.103 regarding whether the applicant is a minority-owned business or a women-owned business, and the ethnicity, race, and sex of the applicant's principal owners if it complies with the requirements of proposed subpart B as otherwise required for covered financial institutions pursuant to proposed §§ 1002.107, 1002.108, 1002.111, 1002.112, and 1002.114 for that application. In short, proposed § 1002.5(a)(4)(vii) would permit a previously covered financial institution to collect such information for covered applications for up to five years after it fell below the loan-volume threshold of proposed § 1002.105(b), provided that it does so in accordance with the relevant requirements of proposed subpart B.

The Bureau expects that some creditors that are no longer covered financial institutions and thus no longer required to report 1071 data in a given reporting year may prefer to continue to collect applicants' protected demographic information in the event they become a covered financial institution again, in order to maintain consistent compliance standards from year to year. As it did in a similar context for HMDA reporting,[297] the Bureau believes that permitting such collection for five years provides an appropriate time frame under which a financial institution should be permitted to continue collecting the information without having to change its compliance processes. The Bureau believes that a five-year period is sufficient to help an institution discern whether it is likely to have to report 1071 data in the near future but not so long as to permit it to collect such information in a period too attenuated from previous 1071 reporting.

Therefore, the Bureau believes that it is an appropriate use of its statutory authority under sections 703(a)[298] and

[292] *Waterkeeper All.,* 853 F.3d at 530 (quoting *Pub. Citizen,* 869 F.2d at 1556); *see Alabama Power,* 636 F.2d at 360–61.

[293] 15 U.S.C. 1691(a).

[294] 15 U.S.C. 1691(b)(5).

[295] Existing § 1002.5(a)(2).

[296] *Equal Credit Opportunity Act (Regulation B) Ethnicity and Race Information Collection,* 82 FR 45680, 45684 (Oct. 2, 2017).

[297] Existing § 1002.5(a)(4)(iii).

[298] 15 U.S.C. 1691b(a).

704B(g)(1) of ECOA to permit creditors to collect the 1071 demographic information in the manner set out in proposed § 1002.5(a)(4)(vii). The proposal would effectuate the purposes of and facilitate compliance with ECOA and is necessary to carry out, enforce, and compile data pursuant to section 1071 because it would permit creditors to collect information without interruption from year to year, thereby facilitating compliance with the 1071 rule's data collection requirements and improving the quality and reliability of the data collected. The Bureau also believes that this provision is narrowly tailored and would preserve and respect the general limitations in existing § 1002.5(b) through (d).

Proposed § 1002.5(a)(4)(viii) would provide that a creditor that exceeded the loan-volume threshold in the first year of the two-year threshold period provided in proposed § 1002.105(b) may, in the second year, collect information pursuant to proposed subpart B for a covered application as defined in proposed § 1002.103 regarding whether the applicant is a minority-owned business or a women-owned business, and the ethnicity, race, and sex of the applicant's principal owners if it complies with the requirements of subpart B as otherwise required for covered financial institutions pursuant to proposed §§ 1002.107, 1002.108, 1002.111, 1002.112, and 1002.114 for that application.

The Bureau believes that its proposal would benefit creditors in certain situations in which the creditor has not previously reported 1071 data but expects to be covered in the following year and wishes to prepare for that future reporting obligation. For example, where a creditor surpasses the loan-volume threshold of proposed § 1002.105(b) for the first time in a given calendar year, it may wish to begin collecting applicants' protected demographic information for covered applications received in the next calendar year (second calendar year) so as to ensure its compliance systems are fully functional before it is required to collect and report information pursuant to proposed subpart B in the following calendar year (third calendar year).

The Bureau believes that it is an appropriate use of its statutory authority under sections 703(a) and 704B(g)(1) of ECOA to permit creditors to collect information under proposed § 1002.5(a)(4)(viii). A creditor likely would benefit from being able to collect applicants' protected demographic information with assurance of compliance with existing § 1002.5 regardless of whether it actually becomes subject to proposed subpart B reporting at the end of the two-year threshold period. The proposal would effectuate the purposes of and facilitate compliance with ECOA and is necessary to carry out, enforce, and compile data pursuant to section 1071 because it would facilitate compliance with the 1071 rule's data collection requirements and improve the quality and reliability of the data collected by financial institutions that may be transitioning into being required to collect and report 1071 data.

Proposed § 1002.5(a)(4)(ix) would state that a creditor that is not currently a covered financial institution under proposed § 1002.105(b), and is not otherwise a creditor to which proposed § 1002.5(a)(4)(vii) or (viii) applies, may collect information pursuant to proposed subpart B for a covered application as defined in proposed § 1002.103 regarding whether an applicant for a covered credit transaction is a minority-owned business or a women-owned business, and the ethnicity, race, and sex of the applicant's principal owners if the creditor complies with the requirements of proposed subpart B as otherwise required for covered financial institutions pursuant to proposed §§ 1002.107 through 1002.112 and 1002.114 for that application. The proposal would permit a financial institution that wishes to voluntarily report 1071 data to collect applicants' protected demographic information without running afoul of Regulation B. Unlike creditors subject to proposed § 1002.5(a)(4)(vii) or (viii), a creditor seeking to voluntarily collect applicant's protected demographic information under proposed § 1002.5(a)(4)(ix) would be required to report it to the Bureau.

The Bureau believes that permitting creditors to collect 1071 demographic information pursuant to proposed § 1002.5(a)(4)(vii) or (viii) would facilitate compliance and promote data quality in the event that creditors subject to those provisions later become covered financial institutions. For those creditors that wish to voluntarily report 1071 data, as well as others covered by proposed § 1002.5(a)(4)(ix) (where reporting is required when applicants' protected demographic information is collected), the reported data would be additional information that would further the intended purposes of the statute. An analysis of business and community development needs would benefit from the inclusion of voluntarily reported data from financial institutions below the reporting threshold. Such institutions more often serve sparsely populated rural, underserved communities or are member-owned organizations (such as credit unions). As some SERs suggested, the voluntary collection and reporting of 1071 data by such financial institutions may stem from a community development orientation and commitment to fair lending. Further, the reporting of such data would provide a more complete picture of total lending activity—and therefore enable a more complete analysis of fair lending risks as well as business and community development needs—especially given that larger financial institutions may be less likely to operate in sparsely populated, rural, and underserved communities, for the reasons set out in part II above. The Bureau is proposing § 1002.5(a)(4)(ix) in response to feedback from some stakeholders that indicated they might want to collect and report 1071 data even if they were not required to do so. The Bureau believes, for the reasons set out above, that it is an appropriate use of its general authority under sections 703(a) and 704B(g)(1) of ECOA to permit creditors to collect information under proposed § 1002.5(a)(4)(ix), as such collection would effectuate the purposes of and facilitate compliance with ECOA and is necessary to carry out, enforce, and compile data pursuant to section 1071. Further, the Bureau believes that permitting creditors to collect applicants' protected demographic information would result in the collection of additional information that could carry out section 1071's business and community development purpose.

Existing comment 5(a)(4)–1 currently addresses recordkeeping requirements for ethnicity, race, and sex information that is voluntarily collected for HMDA under the existing provisions of § 1002.5(a)(4). The Bureau is proposing to revise this comment by adding to it a parallel reference to proposed subpart B, along with a statement that the information collected pursuant to proposed subpart B must be retained pursuant to the requirements set forth in proposed § 1002.111.

Proposed comment 5(a)(2)–4 would state that proposed subpart B of Regulation B generally requires creditors that are covered financial institutions as defined in proposed § 1002.105(a) to collect and report information about the ethnicity, race, and sex of the principal owners of applicants for certain small business credit, as well as whether the applicant is minority-owned or women-owned as defined in proposed § 1002.102(m) and (s), respectively. The Bureau is proposing this comment for parity with existing comment 5(a)(2)–2, which

addresses the requirement to collect and report information about the race, ethnicity, and sex of applicants under HMDA. Existing comment 5(a)(2)–3 explains that persons such as loan brokers and correspondents do not violate ECOA or Regulation B if they collect information that they are otherwise prohibited from collecting, where the purpose of collecting the information is to provide it to a creditor that is subject to HMDA or another Federal or State statute or regulation requiring data collection. The Bureau believes that the reference to another Federal statute or regulation adequately encompasses section 1071 and proposed subpart B, and thus it does not propose to amend this existing comment in order to make clear that loan brokers and other persons collecting applicants' protected demographic information on behalf of covered financial institutions are not violating ECOA or Regulation B by doing so.

The Bureau seeks comment on these three proposed exemptions to be added to existing § 1002.5(a)(4), and associated commentary, including whether there are other specific situations that should be added to the list of exemptions in § 1002.5(a)(4) to permit the collection of applicants' protected demographic information, and whether any similar modifications to other provisions are necessary. In particular, the Bureau seeks comment on whether it should add another exemption to § 1002.5(a)(4) relating to proposed § 1002.114(c)(1), wherein the Bureau is proposing to permit financial institutions to collect, but would not require them to report, applicants' protected demographic information prior to the compliance date.

The Bureau also notes that, as discussed in the section-by-section analysis of proposed § 1002.104(a) below, it seeks comment on whether it should permit financial institutions to voluntarily collect and report 1071 data on applications for products that the Bureau is not proposing to cover. If the Bureau were to permit such voluntary collection and reporting, the Bureau expects to add a provision similar to proposed § 1002.5(a)(4)(ix) to address it.

## Subpart B—Small Business Lending Data Collection

### Section 1002.101 Authority, Purpose, and Scope

Proposed § 1002.101 would set forth the authority, purpose, and scope for proposed subpart B. Specifically, it would provide that proposed subpart B is issued by the Bureau pursuant to section 704B of ECOA (15 U.S.C. 1691c–2). It would further state that, except as otherwise provided therein, proposed subpart B applies to covered financial institutions, as defined in proposed § 1002.105(b), other than a person excluded from coverage of this part by section 1029 of the Dodd-Frank Act. It also would set out section 1071's two statutory purposes of facilitating fair lending enforcement and enabling the identification of business and community development needs and opportunities for women-owned, minority-owned, and small businesses.

The Bureau seeks comment on its proposed approach to this section, including whether any other information on the 1071 rule's authority, purpose, or scope should be addressed herein.

### Section 1002.102 Definitions

The Bureau is proposing a number of definitions for terms used in subpart B, in § 1002.102.[299] These definitions generally fall into several categories. First, some definitions in proposed § 1002.102 refer to terms defined elsewhere in proposed subpart B—specifically, the terms business, covered application, covered credit transaction, covered financial institution, financial institution, and small business are defined in proposed §§ 1002.106(a), 1002.103, 1002.104, 1002.105(b), 1002.105(a), and 1002.106(b), respectively. These terms are of particular importance in proposed subpart B, and the Bureau is proposing to define them in separate sections, rather than in proposed § 1002.102, for ease of reading.

Second, some terms in proposed § 1002.102 are defined by cross-referencing the definitions of terms defined in existing Regulation B—specifically, business credit, credit, and State are defined by reference to existing § 1002.2(g), (j), and (aa), respectively. Similarly, several definitions refer to terms defined in other regulations—specifically, a portion of the affiliate definition refers to the SBA's regulation at 13 CFR 121.103, and dwelling refers to the definition in Regulation C § 1003.2(f). These terms are each used in proposed subpart B, and the Bureau believes it is appropriate to incorporate them into the subpart B definitions in this manner.

Finally, the remaining terms are defined directly in proposed § 1002.102. These include applicant, closed-end credit transaction, minority individual, minority-owned business, open-end credit transaction, principal owner, small business lending application register, and women-owned business, as well as a portion of the definition of affiliate. Some of these definitions draw on definitions in existing Regulation B or elsewhere in Federal laws or regulations.

The Bureau believes that basing this proposal's definitions on previously defined terms (whether in Regulation B, Regulation C, or regulations promulgated by another agency), to the extent possible, would minimize regulatory uncertainty and facilitate compliance, particularly where the other regulations are likely to apply, in their own right, to the same transactions. However, as discussed further below, the Bureau is in certain instances proposing to deviate from the existing definitions for purposes of this proposal.

These definitions are each discussed in detail below. The Bureau is proposing these definitions pursuant to its authority under section 704B(g)(1) to prescribe such rules and issue such guidance as may be necessary to carry out, enforce, and compile data pursuant to section 1071. In addition, the Bureau is proposing certain of these definitions to implement particular definitions in section 1071 including the statutory definitions set out in 704B(h). Any other authorities that the Bureau is relying on to propose certain definitions are discussed in the section-by-section analysis of those specific definitions.

The Bureau seeks comment on its proposed approach to each of these definitions, as well as whether there are any other terms that the Bureau should define for purposes of proposed subpart B.

#### 102(a) Affiliate

Proposed § 1002.102(a) would define ''affiliate'' based on whether the term is used to refer to a financial institution or to an applicant.

Proposed § 1002.102(a) would define ''affiliate'' with respect to a financial institution as any company that controls, is controlled by, or is under common control with, another company, as set forth in the Bank Holding Company Act of 1956.[300] Existing Regulation B does not define affiliate. This proposed definition

[299] The Bureau notes that there are certain terms defined in proposed subpart B outside of proposed § 1002.102. This occurs where a definition is relevant only to a particular section. For example, the firewall provisions in proposed § 1002.108 use the phrases ''involved in making any determination concerning a covered application'' and ''should have access.'' Those phrases are defined in § 1002.108(a). Those definitions are discussed in detail in the section-by-section analysis of the provisions in which they appear.

[300] 12 U.S.C. 1841 *et seq.*

would provide a consistent approach with the Bureau's Regulation C, which applies the term to financial institutions, as defined in Regulation C, for certain reporting obligations.[301] The Bureau believes that this definition would be appropriate to define an affiliate of a financial institution, and that it should provide sufficient clarity for financial institutions when determining responsibilities under proposed subpart B.

Proposed § 1002.102(a) would define ''affiliate'' with respect to a business or an applicant as having the same meaning as described in 13 CFR 121.103, which is an SBA regulation titled ''How does SBA determine affiliation?'' This proposed definition would provide consistency with the Bureau's proposed approach to what constitutes a small business for purposes of section 1071, as discussed in the section-by-section analysis of proposed § 1002.106(b) below. As discussed in the section-by-section analysis of proposed § 1002.106(b) below, the Bureau is proposing to define a small business by reference to the SBA's regulations (with the exception of an alternate size standard, as set forth in proposed § 1002.106(b)). As discussed in the section-by-section analysis of proposed § 1002.107(a)(14), the Bureau is proposing to permit, but not require, a financial institution to report the gross annual revenue for the applicant in a manner that includes the revenue of affiliates as well. As discussed in the section-by-section analysis of proposed § 1002.107(a)(16), the Bureau is proposing that a financial institution, if asked, shall explain to the applicant that workers for affiliates of the applicant would only be counted if the financial institution were also collecting the affiliates' gross annual revenue. The Bureau is therefore proposing to define affiliate in subpart B for purposes of a business or an applicant by referring to the SBA's definition of affiliate.

The Bureau seeks comment on its proposed approach to this definition.

102(b) Applicant

Proposed § 1002.102(b) would define ''applicant'' to mean any person who requests or who has received an extension of business credit from a financial institution. The term ''applicant'' is undefined in section 1071. Proposed § 1002.102(b) is based on the definition of applicant in existing Regulation B, though for consistency with other parts of this proposed rule, it adds a limitation that the credit be business credit and uses the term financial institution instead of creditor. It also omits the references to other persons who are or may become contractually liable regarding an extension of credit such as guarantors, sureties, endorsers, and similar parties. The Bureau is concerned that including other such persons could exceed the scope of the data collection anticipated by section 1071. Including them could also make the data collection more difficult as financial institutions might need to report data points (such as gross annual revenue, NAICS code, time in business, and others) regarding multiple persons in connection with a single application. Collecting such information on guarantors, sureties, endorsers, and similar parties would likely not support 1071's business and community development purpose. Thus, the Bureau believes it is appropriate to limit the definition of applicant in proposed subpart B to only those persons who request, or have received, an extension of business credit from a financial institution.

The Bureau seeks comment on its proposed approach to this definition.

102(c) Business

Proposed § 1002.102(c) would refer to proposed § 1002.106(a) for a definition of the term ''business.'' See the section-by-section analysis of proposed § 1002.106(a) for a detailed discussion of that definition.

102(d) Business Credit

Proposed § 1002.102(d) would refer to existing § 1002.2(g) for a definition of the term ''business credit.'' The term ''credit'' is undefined in section 1071. Section 1071 does not use the term ''business credit,'' though it does define ''small business loan'' as a loan made to a small business. Existing § 1002.2(g) defines ''business credit'' as ''referring to extensions of credit primarily for business or commercial (including agricultural) purposes, but excluding extensions of credit of the types described in § 1002.3(a) through (d).'' The Bureau believes it is appropriate to define business credit by reference to the existing definition in Regulation B. The Bureau's proposal uses the term business credit principally in defining a covered credit transaction in proposed § 1002.104(a).

As described in the section-by-section analysis of proposed § 1002.104(a) below, loans, lines of credit, credit cards, and MCAs (including such credit transactions for agricultural purposes and those that are also covered by HMDA) would all fall under the proposed definition for business credit.

The Bureau notes existing § 1002.2(g) excludes public utilities credit, securities credit, incidental credit, and government credit (that is, extensions of credit made *to* governments or governmental subdivisions, agencies, or instrumentalities—not extensions of credit made *by* governments), as defined in existing § 1002.3(a) through (d), from certain aspects of existing Regulation B.[302] As described in the section-by-section analysis of proposed § 1002.104(b) below, for the purpose of subpart B, the Bureau is proposing complete exclusions for public utilities credit, securities credit, and incidental credit from the definition of a covered credit transaction in proposed § 1002.104(b). The Bureau is not proposing an exclusion for extensions of credit made to governments or governmental subdivisions, agencies, or instrumentalities, because governmental entities would not constitute small businesses under the proposed rule.[303] Moreover, as described in the section-by-section analysis of proposed § 1002.104(b) below, the Bureau believes it is appropriate to interpret section 1071 as not applying to factoring, leases, consumer-designated credit used for business purposes, or credit secured by certain investment properties.

The Bureau seeks comment on its proposed approach to this definition.

102(e) Closed-End Credit Transaction

Proposed § 1002.102(e) states that a closed-end credit transaction means an extension of credit that is not an open-end credit transaction under proposed § 1002.102(n). The Bureau's proposal specifies different requirements for collecting and reporting certain data points based on whether the application is for a closed-end credit transaction or an open-end credit transaction. See the section-by-section analysis of proposed § 1002.102(n) for a discussion of what constitutes an open-end credit transaction.

The Bureau seeks comment on its proposed approach to this definition.

102(f) Covered Application

Proposed § 1002.102(f) would refer to proposed § 1002.103 for a definition of the term ''covered application.'' See the

[301] *See* Regulation C comment 4(a)(11)–3.

[302] As explained in existing comment 3–1, under § 1002.3, procedural requirements of Regulation B do not apply to certain types of credit. The comment further states that all classes of transactions remain subject to § 1002.4(a) (the general rule barring discrimination on a prohibited basis) and to any other provision not specifically excepted.

[303] Government entities are not ''organized for profit'' and thus would not be a ''business concern'' under proposed § 1002.106(a).

section-by-section analysis of proposed § 1002.103 for a detailed discussion of that definition.

102(g) Covered Credit Transaction

Proposed § 1002.102(g) would refer to proposed § 1002.104 for a definition of the term ''covered credit transaction.'' See the section-by-section analysis of proposed § 1002.104 for a detailed discussion of that definition.

102(h) Covered Financial Institution

Proposed § 1002.102(h) would refer to proposed § 1002.105(b) for a definition of the term ''covered financial institution.'' See the section-by-section analysis of proposed § 1002.105(b) for a detailed discussion of that definition.

102(i) Credit

Proposed § 1002.102(i) would refer to existing § 1002.2(j) for a definition of the term ''credit.'' The term ''credit'' is undefined in section 1071. Existing § 1002.2(j), which largely follows the definition of credit in ECOA,[304] defines ''credit'' to mean the right granted by a creditor to an applicant to defer payment of a debt, incur debt and defer its payment, or purchase property or services and defer payment therefor. The Bureau believes that referring to this existing definition of credit for purposes of subpart B would help to foster consistency with existing Regulation B. The term credit in proposed subpart B is used in the context of what constitutes a covered credit transaction—that is, whether the application is reportable under the section 1071 rule. See the section-by-section analysis of proposed § 1002.104 below for more details.

The Bureau seeks comment on its proposed approach to this definition.

102(j) Dwelling

Proposed § 1002.102(j) would refer to Regulation C § 1003.2(f) for a definition of the term ''dwelling.'' That provision defines dwelling to mean a residential structure, whether or not attached to real property. The term includes but is not limited to a detached home, an individual condominium or cooperative unit, a manufactured home or other factory-built home, or a multifamily residential structure or community. Proposed comment 102(j)–1 would provide that Bureau interpretations that appear in supplement I to part 1003 containing official commentary in connection with § 1003.2(f) are generally applicable to the definition of a dwelling in proposed § 1002.102(j). Proposed comment 102(j)–2 would clarify that the definition of dwelling under existing § 1002.14(b)(2) applies to relevant provisions under existing Regulation B, and proposed § 1002.102(j) is not intended to repeal, abrogate, annul, impair, or interfere with any existing interpretations, orders, agreements, ordinances, rules, or regulations adopted or issued pursuant to existing § 1002.14(b)(2).

The Bureau believes that adopting the Regulation C definition of dwelling would streamline reporting and minimize compliance risks for financial institutions that are also reporting covered credit transactions under HMDA and would simplify data analysis for HMDA-reportable transactions. As an alternative, the Bureau considered adopting the existing Regulation B definition of dwelling, which is similar to the Regulation C definition. The Bureau understands that the existing Regulation B definition of dwelling is primarily applied in the context of the ECOA Valuations Rule[305] and would thus not streamline reporting and minimize compliance risks in the same way as would adopting the Regulation C definition, which is already being applied to data collection and reporting requirements. The existing Regulation B definition of dwelling is also not supported by the same level of clarifying commentary as the definition under Regulation C. The Bureau believes that proposed comment 102(j)–1 will address most if not all questions related to the definition of dwelling by incorporating the Bureau's official commentary related to § 1003.2(f). Proposed comment 102(j)–2 also seeks to avoid potential confusion by clarifying that proposed § 1002.102(j) does not affect the status of existing § 1002.14(b)(2), which defines the term ''dwelling'' for purposes of existing Regulation B.

The Bureau seeks comment on its proposed approach to this definition.

102(k) Financial Institution

Proposed § 1002.102(*l*) would refer to proposed § 1002.105(a) for a definition of the term ''financial institution.'' See the section-by-section analysis of proposed § 1002.105(a) for a detailed discussion of that definition.

102(l) Minority Individual

Background

ECOA section 704B(b)(1) requires a financial institution to ask whether an applicant is a minority-owned business. Additionally, 704B(h)(5) uses the term ''minority individual'' when defining the term minority-owned business. Although 704B(h)(5) defines the term ''minority,'' section 1071 does not define the term ''minority individual.'' Section 704B(h)(4) defines the term ''minority'' as having the same meaning as in section 1204(c)(3) of the Financial Institutions Reform, Recovery, and Enforcement Act of 1989 (FIRREA).[306] That statute defines ''minority'' to mean any Black American, Native American, Hispanic American, or Asian American.[307]

SBREFA Proposal Under Consideration and Feedback Received

In the SBREFA Outline, the Bureau stated that it was considering proposing guidance that would clarify that a minority individual is a natural person who is Black or African American, Asian, American Indian or Alaska Native, Native Hawaiian or Other Pacific Islander, and/or Hispanic or Latino[308] (*i.e.,* would mirror the aggregate race and ethnicity categories in Regulation C).thnsp;[309] The Bureau also stated it was considering proposing guidance clarifying that a multi-racial person would be considered a minority individual.

Several SERs supported clarifying the meaning of minority individual using the aggregate categories for race and ethnicity in Regulation C.[310] However, one SER suggested using the disaggregated categories in Regulation C, instead of the aggregate categories, for this purpose. Other stakeholders providing feedback on the SBREFA Outline generally supported using the aggregate categories when determining who is a minority individual for purposes of reporting whether a business is a minority-owned business.

The SBREFA Panel recommended clarifying that, consistent with the aggregate categories for race and ethnicity in Regulation C, a minority individual is a natural person who is Black or African American, Asian, American Indian or Alaska Native, Native Hawaiian or Other Pacific Islander, and/or Hispanic or Latino.[311]

Proposed Rule

Consistent with the approach that the Bureau took during the SBREFA process, proposed § 1002.102(1) would clarify that the term ''minority

[304] *See* 15 U.S.C. 1691a. Existing Regulation B uses the term ''applicant'' instead of ''debtor.''

[305] *See* 12 CFR 1002.14.

[306] Public Law 101–73, section 1204(c)(3), 103 Stat. 183, 521 (1989) (12 U.S.C. 1811 note).

[307] *Id.*

[308] SBREFA Outline at 18–19.

[309] Appendix B to 12 CFR part 1003.

[310] The SER feedback discussed in this section-by-section analysis can be found in the SBREFA Panel Report at 22.

[311] *Id.* at 44.

individual'' means a natural person who is American Indian or Alaska Native, Asian, Black or African American, Native Hawaiian or Other Pacific Islander, and/or Hispanic or Latino. The Bureau believes that these categories represent contemporary, more specific delineations of the categories described in section 1204(c)(3) of FIRREA.[312] Proposed comment 102(1)–2 would clarify that a multi-racial or multi-ethnic person would be a minority individual. Proposed comment 102(1)–1 would clarify that this definition would be used only when an applicant determines whether it is a minority-owned business pursuant to proposed §§ 1002.102(m) and 1002.107(a)(18). Proposed comment 102(1)–3 would clarify the relationship of the definition of minority individual to the disaggregated subcategories used to determine a principal owner's ethnicity and race. The Bureau's proposed approach is consistent with the SBREFA Panel's recommendation discussed above.

The Bureau believes this clarified terminology, which uses the aggregate ethnicity and race categories set forth in existing Regulation B [313] and Regulation C,[314] would avoid the potentially confusing situation where an applicant is using one set of aggregate race and ethnicity categories when answering questions about the principal owners' race and ethnicity but is asked to use a different set of aggregate categories when indicating whether a business is a minority-owned business. It also avoids creating a situation where a financial institution is required to use different race and ethnicity categories when complying with different portions of Regulation B and, if applicable, Regulation C. Consistency among race and ethnicity data collection regimes may also allow for better coordination among data users when reviewing data across multiple data collection regimes.[315]

The Bureau seeks comment on its proposed approach to this definition, including its proposed clarification of the definition of minority individual, and requests comment on whether additional clarification is needed. Additionally, in section-by-section analysis of proposed § 1002.107(a)(20), the Bureau is requesting comment regarding whether an additional category for Middle Eastern or North African should be added for purposes of responding to a financial institution's inquiry regarding a principal owner's ethnicity or race and, if so, how this category should be included and defined. The Bureau also seeks comment on whether the definition of minority individual should include a natural person who is Middle Eastern or North African, as well as whether the inclusion of a natural person who is Middle Eastern or North African in the definition of minority individual for purposes of proposed § 1002.102(*l*) should be dependent on whether Middle Eastern or North African is added as an aggregate category for purposes of proposed § 1002.107(a)(20).

102(m) Minority-Owned Business

Background

ECOA section 704B(b)(1) requires financial institutions to inquire whether applicants for credit are minority-owned businesses. For purposes of the financial institution's inquiry under 704B(b), 704B(h)(5) defines a business as a minority-owned business if (A) more than 50 percent of the ownership or control is held by one or more minority individuals, and (B) more than 50 percent of the net profit or loss accrues to one or more minority individuals. Section 1071 does not expressly define the related terms of ''ownership'' or ''control,'' nor does it describe what it means for net profits or losses to accrue to an individual.

SBREFA Proposal Under Consideration and Feedback Received

In the SBREFA Outline, the Bureau stated it was considering proposing use of the statutory definition of ''minority-owned business'' (as set forth above) with further clarification of the terms ''ownership'' and ''control.'' [316] The Bureau considered proposing use of concepts set forth in the Financial Crimes Enforcement Network's (FinCEN) Customer Due Diligence (CDD) rule [317] to clarify these terms.

Some SERs expressed concerns with certain aspects of the statutory definition of minority-owned business, asserting that the definition could cause confusion or pose particular complexities.[318] Several SERs and some other stakeholders providing feedback on the SBREFA Outline asked that the definition of minority-owned business be revised to align with the definition used by other agencies, such as the SBA and the CDFI Fund. These SERs and other commenters recommended that the Bureau use a ''50 percent or more'' threshold for ownership or control, instead of the ''more than 50 percent'' standard in the statutory definition. Conversely, two SERs and several other commenters supported using the statutory definition of minority-owned business, including the ''more than 50 percent'' portion of the definition.

A number of SERs recommended that the Bureau simplify the definition to ensure it is understandable to small business applicants and to thereby facilitate consistent data collection. SERs' suggestions included eliminating the portion of the definition that refers to accrual of net profits and losses, eliminating the portion of the definition that refers to control, and providing a simplified and standardized definition.

Several SERs supported using the concepts of ownership and control in FinCEN's CDD rule when defining minority-owned business; one SER said that doing so would be logical and efficient, while another said it would create regulatory consistency and ease compliance burden. One SER said that most credit unions are familiar with the CDD rule. Generally, other commenters supported use of the CDD concepts to clarify the terms ''ownership'' and ''control.'' They stated that small business applicants are familiar with the concepts in the CDD rule or that they appreciated the consistency with existing regulatory requirements. However, one trade association commenter requested that the Bureau provide simplified applicant-facing materials without clarifying the definition, and two other stakeholders suggested that applicants might not be familiar with the CDD rule or may not understand the CDD rule.

The SBREFA Panel recommended seeking comment on potential interpretations of the definition of minority-owned business to clarify the term and to ensure that small business applicants would be able to understand questions asking if they are minority-owned businesses.[319]

Proposed Rule

Proposed § 1002.102(m) would define a minority-owned business as a business for which more than 50 percent of its ownership or control is held by one or more minority individuals, and more than 50 percent of its net profits or

[312] *See, e.g.,* 80 FR 36356 (June 24, 2015) (NCUA interpretive ruling and policy statement implementing an identical FIRREA definition of minority using this same modern terminology).

[313] 12 CFR 1002.13(a)(1)(i).

[314] Appendix B to 12 CFR part 1003.

[315] For example, the OMB uses these same categories for the classification of Federal data on race and ethnicity. *See* Off. of Mgmt. & Budget, *Revisions to the Standards for the Classification of Federal Data on Race and Ethnicity,* 62 FR 58785 (Oct. 30, 1996).

[316] SBREFA Outline at 18–19.

[317] *See* 31 CFR 1010.230.

[318] The SER feedback discussed in this section-by-section analysis can be found in the SBREFA Panel Report at 22.

[319] *Id.* at 44.

losses accrue to one or more minority individuals. This definition is consistent with ECOA section 704B(h)(5) and the Bureau's proposal under consideration in the SBREFA Outline.

Proposed comment 102(m)–1 would explain that a business must satisfy both prongs of the definition to be a minority-owned business—that is, (A) more than 50 percent of the ownership or control is held by one or more minority individuals, and (B) more than 50 percent of the net profits or losses accrue to one or more minority individuals.

Proposed comment 102(m)–2 would clarify that the definition of minority-owned business is used only when an applicant determines if it is a minority-owned business for purposes of proposed § 1002.107(a)(18). A financial institution would provide the definition of minority-owned business when asking the applicant to provide minority-owned business status pursuant to proposed § 1002.107(a)(18), but a financial institution would not be permitted or required to make its own determination regarding whether an applicant is a minority-owned business for this purpose.

Proposed comment 102(m)–3 would further note that a financial institution would be permitted to assist an applicant when determining whether it is a minority-owned business but would not be required to do so, and could provide the applicant with the definitions of ownership, control, and accrual of net profits or losses set forth in proposed comments 102(m)–4 through –6. Additionally, for purposes of reporting an applicant's minority-owned business status, a financial institution would rely on the applicant's determinations of its ownership, control, and accrual of net profits and losses.

Consistent with the approach described during the SBREFA process, the Bureau is proposing to clarify ''ownership'' and ''control'' using concepts from the CDD rule. Proposed comment 102(m)–4 would clarify that a natural person owns a business if that natural person directly or indirectly, through any contract, arrangement, understanding, relationship or otherwise, has an equity interest in the business. Proposed comment 102(m)–4 would also provide examples of ownership and clarify that, where applicable, ownership would need to be traced or followed through corporate or other indirect ownership structures for purposes of proposed §§ 1002.102(m) and 1002.107(a)(18). Proposed comment 102(m)–5 would clarify that a natural person controls a business if that natural person has significant responsibility to manage or direct the business, and would provide examples of natural persons who control a business. Proposed comment 102(m)–6 would clarify that a business's net profits and losses accrue to a natural person if that natural person receives the net profits or losses, is legally entitled or required to receive the net profits or losses, or is legally entitled or required to recognize the net profits or losses for tax purposes.

The Bureau believes many small business applicants already respond to questions about who owns and who controls a business entity when completing CDD forms or otherwise responding to questions related to the CDD rule and thus should be familiar with the concepts in the CDD rule. Because the CDD rule does not address the second prong of the definition in ECOA section 704B(h)(5) (regarding accrual of net profit or loss), the Bureau is proposing in § 1002.102(m) that this prong of the definition be defined to mean that one or more minority individuals must receive or be legally entitled to receive the net profits or losses or that one or more minority individuals must be legally required to recognize the net profits and losses. However, the Bureau shares some SERs' concerns that the statutory definition of minority-owned business might, in some cases, be difficult for applicants to understand, which could in turn jeopardize the accuracy of reported data. Thus, consistent with the SBREFA Panel's recommendation, the Bureau seeks comment on the proposed definition of minority-owned business and possible alternatives that may clarify the term in order to help ensure that small business applicants can determine whether they are minority-owned businesses for purposes of section 1071 data collection.

102(n) Open-End Credit Transaction

Proposed § 1002.102(n) would state that open-end credit transaction means an open-end credit plan as defined in Regulation Z § 1026.2(a)(20), but without regard to whether the credit is consumer credit, as defined in § 1026.2(a)(12), is extended by a creditor, as defined in § 1026.2(a)(17), or is extended to a consumer, as defined in § 1026.2(a)(11). The term ''open-end credit transaction'' is undefined in section 1071. The Bureau's proposal specifies different rules for collecting and reporting certain data points based on whether the application is for a closed-end credit transaction or an open-end credit transaction. The Bureau believes its proposed definition is reasonable because it aligns with the definition of ''open-end credit transaction'' in Regulation Z § 1026.2(a)(20). The Bureau further believes that such alignment will minimize confusion and facilitate compliance.

The Bureau seeks comment on its proposed approach to this definition.

102(o) Principal Owner

Background

ECOA section 704B(e) requires financial institutions to compile and maintain the ethnicity, race, and sex of an applicant's principal owners. However, section 1071 does not expressly define who is a principal owner of a business.

SBREFA Proposal Under Consideration and Feedback

In the SBREFA Outline, the Bureau stated that it was considering proposing to define the term ''principal owner'' in a manner consistent with the CDD rule.[320] Under a definition consistent with the CDD rule, an individual would be a principal owner if the individual directly or indirectly, through any contract, arrangement, understanding, relationship or otherwise, owns 25 percent or more of the equity interests of the business.

Several SERs and other stakeholders providing feedback on the SBREFA Outline expressed familiarity with the CDD rule, and supported aligning with that rule's 25 percent ownership standard for defining a principal owner for the section 1071 rule.[321] One SER said that aligning definitions with the CDD rule would be logical and efficient. Another SER supported use of the CDD rule's concepts in determining who was a principal owner. Other SERs and stakeholders said they currently collect this information for beneficial owners at or above 20 percent in order to comply with SBA or other requirements and suggested aligning with that standard instead.

The SBREFA Panel recommended that the Bureau propose aligning the definition of principal owner with concepts of ownership and control that exist in other Federal regulations with which financial institutions are already complying, to the extent possible.[322]

Proposed Rule

Proposed § 1002.102(o) would define principal owner in a manner that is, in

[320] SBREFA Outline at 32.

[321] The SER feedback discussed in this section-by-section analysis can be found in the SBREFA Panel Report at 30.

[322] *Id.* at 46.

part, consistent with the CDD rule. Specifically, a natural person would be a principal owner if the natural person directly owns 25 percent or more of the equity interests of the business. However, as proposed comment 102(o)–1 would note, a natural person would need to directly own an equity share of 25 percent or more in the business in order to be a principal owner. Due to the potential complications with collecting a principal owner's ethnicity, race, and sex information when a trust or entity is an owner, the Bureau is proposing that entities not be considered principal owners and indirect ownership by individuals likewise not be considered when determining if someone is a principal owner for purposes of collecting and reporting principal owners' ethnicity, race, and sex or the number of principal owners. Thus, when determining who is a principal owner, ownership would not be traced through multiple corporate structures to determine if a natural person owns 25 percent or more of the applicant's equity interests. Additionally, because only a natural person would be a principal owner for the 1071 rule, entities such trusts, partnerships, limited liability companies, and corporations, would not be principal owners.

Proposed comment 102(o)–2 would clarify that a financial institution would provide an applicant with the definition of principal owner when asking the applicant to provide the number of its principal owners pursuant to proposed § 1002.107(a)(21) and the ethnicity, race, and sex of its principal owners pursuant to proposed § 1002.107(a)(20). If a financial institution meets in person with a natural person about a covered application, the financial institution may be required to determine if the natural person with whom it meets is a principal owner in order to collect and report the principal owner's ethnicity and race based on visual observation and/or surname. (See proposed comments 107(a)(20)–5 and –9.) Additionally, proposed comment 102(o)–2 would note that if an applicant does not provide the number of its principal owners in response to the financial institution's request pursuant to proposed § 1002.107(a)(21), the financial institution may need to determine the number of the applicant's principal owners and report that information based on other documents or information. (See proposed comments 107(a)(21)–1 through –3.)

Consistent with its approach in the SBREFA Outline and with the SBREFA Panel's recommendation, the Bureau is proposing that the definition of principal owner align with the 25 percent ownership definition in the CDD rule. The Bureau believes that this standard, which aligns with another Federal regulation, is already broadly in use and is likely to be familiar to most financial institutions and applicants. Banks, credit unions, and certain other financial institutions must comply with the CDD rule. The Bureau believes applicants, as a general matter, are more likely to be familiar with CDD requirements than SBA or CDFI Fund requirements because they have to complete CDD forms before opening an initial account (*i.e.,* loan or deposit account) at a bank or at certain other institutions. However, due to potential complications with collecting ethnicity, race, and sex information for principal owners, the Bureau is proposing that individuals that only indirectly own 25 percent or more of an applicant's equity interests, as well as entities and trusts, are not principal owners.

The Bureau notes that it is possible under its proposed approach that an applicant might not identify any principal owners as being women or minorities but nonetheless could be a women- and/or minority-owned business. This could occur, for example, if a white male owned 40 percent of a business while three Asian women each owned 20 percent. Only the white male would be designated as a principal owner, but the business would be nonetheless both women-owned and minority-owned. While the Bureau acknowledges that some applicants could find this approach confusing, it is consistent with the statutory language in section 1071. To help mitigate against potential confusion, the Bureau has proposed that the questions regarding minority-owned business status and women-owned business status appear in the proposed sample data collection form before questions about the race, sex, and ethnicity of principal owners.

The Bureau seeks comment on this proposed definition of a principal owner, including the proposal not to include individuals that only indirectly own 25 percent or more of an applicant's equity interests as principal owners. The Bureau requests comment on whether additional clarification on any aspect of the proposed definition is needed.

102(p) Small Business

Proposed § 1002.102(p) would refer to proposed § 1002.106(b) for a definition of the term ''small business.'' See the section-by-section analysis of proposed § 1002.106(b) for a detailed discussion of that definition.

102(q) Small Business Lending Application Register

Proposed § 1002.102(q) would define the term ''small business lending application register'' or ''register'' as the data reported, or required to be reported, annually pursuant to proposed § 1002.109. The Bureau did not include a definition of small business lending application register in the SBREFA Outline, though it did address proposals under consideration for compiling, maintaining, and reporting 1071 data to the Bureau.[323] See the section-by-section analysis of proposed § 1002.109 for a detailed discussion of the proposed rule's provisions addressing reporting data to the Bureau, including feedback received from SERs and other stakeholders on that subject. The Bureau's proposed definition refers only to the data that is reported, or required to be reported, annually; it does not refer to the data required to be collected and maintained (prior to reporting).[324]

The Bureau seeks comment on its proposed definition of ''small business lending application register'' or ''register'' in proposed § 1002.102(q).

102(r) State

Proposed § 1002.102(r) would refer to existing § 1002.2(aa) for a definition of the term ''State.'' Existing § 1002.2(aa) defines the term as any State, the District of Columbia, the Commonwealth of Puerto Rico, or any territory or possession of the United States. The Bureau did not include a definition of State in the SBREFA Outline nor did it receive any feedback on the term from SERs. This proposed definition of State would be consistent with existing Regulation B and familiar to financial institutions.

The Bureau seeks comment on its proposed approach to this definition.

102(s) Women-Owned Business

Background

ECOA section 704B(b)(1) requires financial institutions to inquire whether applicants for credit are women-owned businesses. For purposes of the financial institution's inquiry under 704B(b), 704B(h)(5) defines a business as a women-owned business if (A) more than 50 percent of the ownership or control is held by one or more women, and (B) more than 50 percent of the net profit or loss accrues to one or more women.

[323] SBREFA Outline at 39.

[324] In contrast, the term ''Loan/Application Register'' in Regulation C § 1003.2(k) refers to both the record of information required to be collected pursuant to § 1003.4 as well as the record submitted annually or quarterly, as applicable, pursuant to § 1003.5(a).

Section 1071 does not expressly define the related terms of ''ownership'' or ''control,'' nor does it describe what it means for net profits or losses to accrue to an individual.

SBREFA Proposal Under Consideration and Feedback Received

In the SBREFA Outline, the Bureau stated that it was considering proposing use of the statutory definition of a ''women-owned business'' (as set forth above) with further clarification of the terms ''ownership'' and ''control'' using concepts set forth in the CDD rule.[325]

Some SERs expressed concerns with certain aspects of the statutory definition of women-owned business, asserting that the definition could cause confusion or pose particular complexities.[326] Several SERs and some other stakeholders providing feedback on the SBREFA Outline asked that the definition of women-owned business be revised to align with the definition used by other agencies, such as the SBA and the CDFI Fund. Some SERs as well as some other commenters expressed concern that a business that is owned equally by a woman and a man would not be a ''women-owned business'' under the statutory definition of women-owned business because the woman would not own ''more than 50 percent'' of the business and the woman might not control more than 50 percent of the business. These SERs and other commenters recommended that the Bureau instead use a ''50 percent or more'' threshold for ownership or control as the standard. Conversely, two SERs and several other stakeholders supported using the statutory definition of women-owned business, including the ''more than 50 percent'' portion of the definition.

A number of SERs recommended that the Bureau simplify the definition to ensure it is understandable to small business applicants and to thereby facilitate consistent data collection. SERs' suggestions included eliminating the portion of the definition that refers to accrual of net profit and loss, eliminating the portion of the definition that refers to control, and providing a simplified and standardized definition.

Several SERs supported using the concepts of ownership and control in the CDD rule when defining women-owned business; one SER said that doing so would be logical and efficient, while another said it would create regulatory consistency and ease compliance burden. One SER said that most credit unions are familiar with the CDD rule. Generally, other commenters supported use of the CDD concepts to clarify the terms ''ownership'' and ''control.'' They stated that small business applicants are familiar with the concepts in the CDD rule or that they appreciated the consistency with existing regulatory requirements. However, one trade association commenter thought the Bureau should provide simplified applicant-facing materials without clarifying the definition, and two other stakeholders suggested that applicants might not be familiar with the CDD rule or may not understand the CDD rule.

The SBREFA Panel recommended seeking comment on potential interpretations of the definition of women-owned business to clarify the term and to ensure that small business applicants would be able to understand questions asking if they are a women-owned business.[327]

Proposed Rule

Proposed § 1002.102(s) would define a women-owned business as a business for which more than 50 percent of its ownership or control is held by one or more women, and more than 50 percent of its net profits or losses accrue to one or more women. This definition is consistent with ECOA section 704B(h)(6) and the Bureau's proposal under consideration in the SBREFA Outline.

Proposed comment 102(s)–1 would explain that a business must satisfy both prongs of the definition to be a women-owned business—that is, (A) more than 50 percent of the ownership or control is held by one or more women, and (B) more than 50 percent of the net profits or losses accrue to one or more women.

Proposed comment 102(s)–2 would clarify that the definition of women-owned business is used only when an applicant determines if it is a women-owned business for purposes of proposed § 1002.107(a)(19). A financial institution would provide the definition of women-owned business when asking the applicant to provide women-owned business status pursuant to proposed § 1002.107(a)(19), but a financial institution would not be permitted or required to make its own determination regarding whether an applicant is a women-owned business for this purpose.

Proposed comment 102(s)–3 would further note that a financial institution would be permitted to assist an applicant when determining whether it is a women-owned business but would not be required to do so, and could provide the applicant with the definitions of ownership, control, and accrual of net profits or losses set forth in proposed comments 102(s)–4 through –6. Additionally, for purposes of reporting an applicant's women-owned business status, a financial institution would rely on the applicant's determinations of its ownership, control, and accrual of net profits and losses.

Consistent with the approach during the SBREFA process, the Bureau is proposing to clarify ''ownership'' and ''control'' using concepts from the CDD rule. Proposed comment 102(s)–4 would clarify that a natural person owns a business if that natural person directly or indirectly, through any contract, arrangement, understanding, relationship or otherwise, has an equity interest in the business. Proposed comment 102(s)–4 would also provide examples of ownership and clarify that, where applicable, ownership would need to be traced or followed through corporate or other indirect ownership structures for purposes of proposed §§ 1002.102(s) and 1002.107(a)(19). Proposed comment 102(s)–5 would clarify that a natural person controls a business if that natural person has significant responsibility to manage or direct the business and would provide examples of natural persons who control a business. Proposed comment 102(s)–6 would clarify that a business's net profits and losses accrue to a natural person if that natural person receives the net profits, is legally entitled or required to receive the net profits or losses, or is legally entitled or required to recognize the net profits or losses for tax purposes.

The Bureau believes many small business applicants already respond to questions about who owns and who controls a business entity when completing CDD forms or otherwise responding to questions related to the CDD rule and would be familiar with the concepts in the CDD rule. Because the CDD rule does not address the second prong of the definition in ECOA section 704B(h)(6) (regarding accrual of net profit or loss), the Bureau is proposing in comment 102(s)–4 that this prong of the definition be defined to mean that one or more women must receive or be legally entitled to receive the net profits or losses or that one or more women must be legally required to recognize the net profits or losses. However, the Bureau shares some SERs' concerns that the statutory definition of women-owned business might, in some cases, be difficult for applicants to

[325] SBREFA Outline at 18–19.

[326] The SER feedback discussed in this section-by-section analysis can be found in the SBREFA Panel Report at 22.

[327] *Id.* at 44.

understand, which could in turn jeopardize the accuracy of reported data. Thus, consistent with the SBREFA Panel's recommendation, the Bureau seeks comment on the proposed definition of women-owned business and possible alternatives that may clarify the term in order to help ensure that small business applicants can determine whether they are a women-owned business for purposes of section 1071 data collection.

Section 1002.103 Covered Applications

ECOA section 704B(b) requires that financial institutions collect, maintain, and report to the Bureau certain information regarding ''any application to a financial institution for credit.'' For covered financial institutions, the definition of ''application'' will trigger data collection and reporting obligations with respect to covered credit transactions. However, section 1071 does not expressly define ''application.''

The Bureau is proposing § 1002.103 to define what is, and is not, a covered application for purposes of subpart B pursuant to its authority in ECOA section 704B(g)(1) to prescribe such rules and issue such guidance as may be necessary to carry out, enforce, and compile data pursuant to section 1071. Proposed § 1002.103(a) would provide a general definition of the term ''covered application,'' followed by a list of the circumstances that are not covered applications in proposed § 1002.103(b).

103(a) Covered Application

SBREFA Proposal Under Consideration and Feedback Received

In the SBREFA Outline, the Bureau stated it was considering defining an ''application'' largely consistent with the definition of that term in existing § 1002.2(f)—*i.e.,* ''an oral or written request for an extension of credit that is made in accordance with procedures used by a creditor for the type of credit requested.''[328] The Bureau considered possible alternative definitions of ''application,'' including defining the term by using the definition of the term ''completed application'' in existing § 1002.2(f) (when ''a creditor has received all the information that the creditor regularly obtains and considers in evaluating applications for the amount and type of credit requested . . . ''). The Bureau also considered defining ''application'' as particular documents or specific data points that, if collected, would trigger a duty to collect and report data.

SERs discussed their varied methods of defining what constitutes an ''application'' within their institutions.[329] Many SERs define an application as the point when there is enough information to make a credit decision. Several SERs define an application as meeting the requirements of a checklist, stating that obtaining all the information and satisfying due diligence can take a long time. Other SERs define an application as the submission of specific data or documents, or obtaining sufficient information about the borrower to pull a credit report. One SER explained that their in-person application process is iterative, not readily definable, and unique for each applicant. The SER also explained that a single underwriting process could be used at their financial institution for multiple loans requested throughout the year.

Several SERs supported using the definition of ''application'' in existing § 1002.2(f). One of these SERs emphasized the importance of capturing data that may indicate potential discouragement of minority-owned businesses, including discouragement that could occur in advance of an application being submitted for underwriting. Another SER stated that using the definition in existing § 1002.2(f) would be helpful for training purposes, rather than creating a wholly new definition for purposes of implementing section 1071. Many SERs urged the Bureau in an eventual 1071 rule to define an application as a completed application, that is, at the point when there is sufficient information to render a credit decision. One SER opposed using the definition of ''completed application,'' explaining that it would be too restrictive and less aligned with the purposes of section 1071. Another SER opposed use of the definition of application in existing § 1002.2(f), explaining that in a ''relationship lending'' model, each small business application is unique.

SERs expressed varying views on whether withdrawn and incomplete applications should be captured in the 1071 data. Some SERs felt incomplete applications should be captured in the 1071 data as a potential indicator of discouragement. One SER stated that small and unsophisticated businesses are more likely to leave an application incomplete. Another SER recommended not capturing incomplete applications, asserting that such data would not be informative or useful. Another SER expressed concern about whether incomplete or withdrawn applications would include sufficient data for reporting.

Other stakeholders also provided feedback on the definition of ''application.'' The overwhelming majority of commenters, including both community groups and industry representatives, supported use of the definition of an ''application'' in existing § 1002.2(f). Community groups, CDFIs, and a SER noted that use of the definition would further the purposes of 1071 by capturing applicants dissuaded from completing an application, potentially due to unlawful discouragement or other discrimination. Commenters highlighted research that minority-owned and women-owned businesses are disproportionately discouraged from applying for credit and the frequency of discrimination during the pre-application stage. One commenter stated that the definition could better identify barriers to credit, consistent with the community development purpose of section 1071. Other commenters, including many industry commenters, stated that financial institutions are familiar with the definition in existing § 1002.2(f), and so use of this definition would reduce burden by minimizing the need for additional training or different procedures. Several commenters also stated that using the definition in existing § 1002.2(f) is appropriate given that section 1071 amends ECOA, which is implemented by existing Regulation B. One industry commenter also highlighted the flexibility provided by the definition in existing § 1002.2(f).

Although supportive of using the definition in existing § 1002.2(f) for the 1071 rule, several industry commenters sought further clarification or illustrations of the definition given considerable variations in practices among financial institutions. One commenter suggested a safe harbor that allows a financial institution to define what constitutes an ''application.'' One industry trade representative expressed that many of its members have no formal ''application'' and so attempts to leverage existing definitions or stages to define an application would be unfamiliar to their members and could create an inflexible process.

Several industry commenters supported triggering section 1071 data collection and reporting based on the ''completed application'' definition in existing § 1002.2(f) and stated that the Bureau should not require data collection on withdrawn and incomplete applications. These commenters stated that using a

[328] SBREFA Outline at 22–23.

[329] The SER feedback discussed in this section-by-section analysis can be found in the SBREFA Panel Report at 24.

''completed application'' definition would provide more complete and meaningful data, more uniformity across products and lenders, and conserve resources that would otherwise be required to gather missing data points on incomplete or withdrawn applications. One commenter stated that collection of data on incomplete applications would not further section 1071's purposes or reflect potential discrimination, but rather would merely represent borrower confusion in the application process. One commenter suggested using a defined set of criteria to define an ''application.''

Several SERs and other stakeholders also provided comments on applicant requests for more than one product at the same time. For example, in connection with the application/loan number data point (referred to in this proposal as the unique identifier data point), one SER stated that if an applicant requests more than one type of credit product, a separate application/loan number is assigned to each product request. In contrast, other SERs indicated they use a single application number even if multiple products are requested. Among other stakeholders, some commenters supported reporting separate applications in instances where the applicant requests multiple covered credit transactions at the same time, while others supported requiring reporting of only one application. One commenter suggested that the Bureau should accommodate both approaches. Another commenter remarked that if a business is applying for multiple products, the basic information is going to be the same, the only difference being that only one product is funded. This same commenter suggested that if these requests are reported as multiple applications, that will overinflate the data.

Relatedly, two SERs discussed the issue of multiple extensions of credit resulting from a single application. One of these SERs explained that such multiple extensions of credit are assigned separate application/loan numbers at their financial institution. The other SER suggested that reporting in this situation will be complex, and that combining the separate loans that could result into a single reporting line would be extremely difficult.

The SBREFA Panel recommended that, if the Bureau proposes using the Regulation B definition of the term ''application''[330] for 1071 data collection, the Bureau consider clarifying when a completed application—*i.e.,* an application sufficient to make a credit decision—falls within the proposed definition of the term ''application.''[331] The SBREFA Panel further recommended the Bureau seek comment on the benefits and costs of collecting 1071 data on incomplete or withdrawn applications.[332] Finally, with respect to lines of credit, the SBREFA Panel recommended (in the context of the loan/credit type and loan/credit purpose data points) that the Bureau seek comment on how financial institutions currently handle increases in lines of credit and how best to require reporting of multiple lines of credit within the same account.[333]

Proposed Rule

The Bureau is proposing to define a covered application in § 1002.103(a) as an oral or written request for a covered credit transaction that is made in accordance with procedures used by a financial institution for the type of credit requested. This proposed definition of ''covered application'' is consistent with the definition of ''application'' that the Bureau said it was considering proposing in the SBREFA Outline.[334] As noted above, the term ''application'' is undefined in section 1071. The Bureau believes its proposed definition of the term is reasonable, particularly as it aligns with the definition of ''application'' in existing § 1002.2(f). The Bureau is also proposing commentary to accompany this definition. Circumstances that are not covered applications are addressed in the section-by-section analysis of proposed § 1002.103(b) below. Pursuant to ECOA section 704B(b)(1), an ''application'' triggering data collection and reporting obligations occurs without regard to whether such application is received in person, by mail, by telephone, by electronic mail or other form of electronic transmission, or by any other means.

Several SERs and a majority of other commenters supported use of this definition, noting that it best aligns with the purposes of section 1071 and is familiar to creditors. The Bureau agrees with certain SERs and other commenters that incomplete and withdrawn applications—which would generally be captured under proposed § 1002.103(a)—are essential to the purposes of section 1071 as a tool to identify potential discrimination (including through discouragement) and to better understand the credit market. The definition of ''covered application'' in proposed § 1002.103(a), which is similar to the definition of ''application'' in existing § 1002.2(f), is also familiar to creditors and provides flexibility to accommodate different application processes described by the SERs (including written and oral applications; online and relationship lending models; and use of standard forms, checklists, and other minimum requirements).[335] Finally, the Bureau believes this approach strikes an appropriate balance by triggering 1071 collection and reporting requirements only after there is a request for credit (using procedures defined by the financial institution), but still early enough in the process to capture most incomplete, withdrawn, and denied applications.

The Bureau recognizes that the proposed definition of ''covered application'' in § 1002.103(a), while flexible, would mean that 1071 data collection and reporting may be triggered at different times for different financial institutions and different types of covered credit transactions. For example, for a financial institution that defines an application under its procedures as the submission of a standard form either online or in-person, a ''covered application'' would be triggered when an applicant submits the form. In contrast, another financial institution may not use a standard form and instead define an application as a request for credit and authorization to pull a credit check on the business and principal owners. In that circumstance, a ''covered application'' under proposed § 1002.103(a) would not be triggered until that process is satisfied. Using the same example, if the financial institution orally collects certain information from a prospective applicant (such as gross annual revenue and business location) and discusses with the prospective applicant potential credit product options offered by the

[330] 12 CFR 1002.2(f).

[331] SBREFA Panel Report at 45.

[332] *Id.*

[333] *Id.*

[334] SBREFA Outline at 22–23.

[335] Business creditors should be familiar with operationalizing this definition based on their experience providing adverse action notices under existing Regulation B, which can be triggered in relation to an incomplete application. *See* § 1002.9(a)(1) and (c) (requiring notice within 30 days after taking adverse action on an incomplete application or 30 days after receiving an incomplete application). Financial institutions may also be familiar with Regulation C's definition of ''application,'' which aligns with existing § 1002.2(f)'s definition of the term. *See* § 1003.2(b) (generally defining an ''application'' as ''an oral or written request for a covered loan that is made in accordance with procedures used by a financial institution for the type of credit requested''); *see also* Regulation C comment 2(b)–1 (noting that Bureau interpretations that appear in the official commentary to Regulation B are generally applicable to the definition of application under Regulation C).

financial institution, no ''covered application'' would be triggered until the prospective applicant indicates that it wants to proceed to apply for credit and authorizes the financial institution to pull a credit check. Similarly, if a prospective applicant merely expresses interest in obtaining credit—not yet focusing on any particular type of covered credit transaction and not submitting a ''covered application''—the interaction also would not be reportable. While the proposed definition of ''covered application'' does not provide a bright-line rule, the Bureau believes the proposed definition would be familiar to financial institutions and provide consistency with existing Regulation B and Regulation C.

During SBREFA, SERs asked the Bureau to clarify when an application sufficient to make a credit decision would align with an ''application'' triggering 1071 collection and reporting requirements. Accordingly, the Bureau notes that a ''covered application'' may align with the information necessary to make a credit decision or it may be possible to have a ''covered application'' before having information necessary to make a credit decision—it depends on each financial institution's own procedures. For example, suppose a financial institution defines an application under its procedures as the point when an applicant, or someone on the applicant's behalf, fills out certain key pieces of information on an application form. If the financial institution's process is to immediately transmit the application to underwriting for a decision once the form is submitted, 1071 collection and reporting would likely be triggered at the same time there is sufficient information to make a credit decision. On the other hand, if the financial institution requires additional verification of documents and follow-up requests before submitting the loan file to underwriting, the financial institution would likely have a ''covered application'' before it has sufficient information to make a credit decision.

Proposed comment 103(a)–1 would underscore that a financial institution has latitude to establish its own application process or procedure and to decide the type and amount of information it will require from applicants. Proposed comment 103(a)–2 would explain that the term ''procedures'' refers to the actual practices followed by a financial institution as well as its stated application procedures, and provides an example. Because the definition of ''covered application'' is based on a financial institution's actual practices, a financial institution should have little incentive to attempt to artificially define an ''application'' in its written procedures as occurring later in the process; for example, if a financial institution has near a 100 percent approval rate because all ''applications'' have already been vetted earlier in the process, the financial institution's stated definition of an application likely does not reflect its actual practices. Proposed comment 103(a)–3 would provide that the commentary accompanying existing §§ 1002.2(f) and 1002.9 is generally applicable to the proposed definition of ''covered application,'' except as provided otherwise in proposed § 1002.103(b).

Proposed comments 103(a)–4 through –6 would address how a financial institution reports multiple covered credit transaction requests at one time or a request for a credit transaction that results in the origination of multiple covered credit transactions. Proposed comment 103(a)–4 would provide that if an applicant makes a request for two or more covered credit transactions at one time, the financial institution reports each request for a covered credit transaction as a separate covered application. The Bureau believes the proposed approach would further the purposes of section 1071 by better capturing demand for credit, including demand for different covered credit transactions at the same time. The Bureau also believes that the simplicity of this approach would reduce data reporting errors compared to potential alternatives, for example, alternatives in which the financial institution may sometimes report such requests as a single covered application or, in other circumstances, as multiple covered applications. Finally, the Bureau believes that concerns about duplicative information requests would be mitigated by permitting financial institutions to reuse certain previously collected data, as set forth in proposed § 1002.107(c)(2). In response to SERs' feedback, proposed comment 103(a)–5 would address the circumstance where an initial request for a single covered credit transaction results in the origination of multiple covered credit transactions. Similarly, in response to the SBREFA Panel's recommendations, proposed comment 103(a)–6 would address requests for multiple lines of credit at one time, proposing that such requests would be reported based on the procedures used by the financial institution for the type of credit account.

Proposed comment 103(a)–7 would address how a financial institution would report applications where there is a change in whether the applicant is requesting a covered credit transaction. If the applicant initially requests a covered credit transaction, but during the application process is offered and accepts instead a product that is not reportable, the Bureau is proposing to designate this circumstance as not a covered application, due in part to concerns that reporting in this scenario could affect data quality. For example, reporting on product types that are not covered credit transactions (for example, leases) could raise data quality questions if there are not appropriate fields to capture the terms of those transactions. Despite these concerns, the Bureau is also considering whether capturing such transactions in the 1071 data could be useful to identifying potential steering or other forms of discrimination, therefore furthering the purposes of section 1071. As noted below, the Bureau seeks comment on whether to require full or limited reporting in these circumstances. If an applicant initially requests a product that is not a covered credit transaction, but during the application process decides to seek instead a product that is a covered credit transaction, the application is a covered application and must be reported.

The Bureau seeks comment on its proposed definition of a covered application in § 1002.103(a) and associated commentary. The Bureau also seeks comment on the advantages and disadvantages of collecting data on incomplete or withdrawn applications, as well as how collection would or would not further the purposes of section 1071. In addition, the Bureau seeks comment on reporting of multiple lines of credit on a single credit account, including how financial institutions internally consider multiple lines of a credit on a single account and the Bureau's proposed approach in comment 103(a)–6.

As noted above, the Bureau also seeks comment on how a financial institution should report applications where there is a change in whether the request for credit involves a covered credit transaction. Specifically, the Bureau seeks comment on the advantages and disadvantages of requiring full or limited reporting where an applicant initially seeks a product that is a covered credit transaction, but ultimately is offered and accepts a product that is not reportable. For example, whether in those circumstances the financial institution should report limited data points related to the transaction (such as whether the applicant is a small business; whether the applicant is a women-owned business or a minority-owned business;

the principal owners' race, sex, and ethnicity; number of principal owners; gross annual revenue; and loan type reported as ''Non-reportable credit product'' or something similar). The Bureau is particularly interested in receiving comments on the utility of such data to identify potential steering or other forms of discrimination, the effect on data quality, and other factors related to the purposes of section 1071.

Alternatives Considered

The Bureau considered several other options for defining ''application.'' First, the Bureau considered triggering 1071 collection and reporting based on a ''completed application,'' which is defined in existing § 1002.2(f) as an application in which the creditor has received ''all the information that the creditor regularly obtains and considers'' in evaluating similar products. The Bureau is not proposing to use the definition of ''completed application'' in existing § 1002.2(f) for its definition of covered application in subpart B, as doing so would exclude incomplete applications and many withdrawn applications that may reflect demand for credit and potential discrimination during the application process. While some commenters noted that use of this definition would provide uniformity in the data across financial institutions and product types, the Bureau is concerned about the loss of data on incomplete and withdrawn applications. Although some commenters suggested that the ''completed application'' definition could result in more accurate and complete data because it is collected later in the application process, the Bureau believes that this benefit can largely be obtained under the current proposal by requiring financial institutions to report, where available, verified applicant-provided information, as set forth in proposed § 1002.107(b). Although some SERs and other stakeholders urged the Bureau to define an application based on when there is sufficient information to render a credit decision, as pointed out by another SER, such a definition may not be as effective in furthering the purposes of 1071. For example, it would capture few to no incomplete applications and a smaller share of withdrawn applications. Moreover, as discussed above, in certain situations—depending on a financial institution's application procedures—the definition of a covered application in proposed § 1002.103(a) may align with the point where there is enough information to render a credit decision.

The Bureau also considered defining ''covered application'' as a set of specific data points that, if collected, would trigger a duty to collect and report 1071 data. The Bureau is not proposing this approach for a few reasons. First, this approach would introduce another regulatory definition of ''application,'' [336] which could cause confusion and hinder compliance. Second, this approach could require financial institutions to alter their existing practices, resulting in burden. Third, this approach could lead some financial institutions to intentionally delay the gathering of one or more data points until after a credit decision was made in order to avoid triggering 1071 obligations. Last, this approach may be difficult to execute given that financial institutions use different data points in underwriting based on product type, lending model, exposure, and other factors.

103(b) Circumstances That Are Not Covered Applications

SBREFA Proposal Under Consideration and Feedback Received

In the SBREFA Outline, the Bureau stated it was considering clarifying circumstances that would not be reportable under section 1071, even if certain of those circumstances would otherwise be considered an ''application'' under existing § 1002.2(f). Specifically, those circumstances were: (1) Inquiries/prequalifications; (2) reevaluation, extension, and renewal requests, except requests for additional credit amounts; and (3) solicitations and firm offers of credit.[337]

*Reevaluation, extension, or renewal requests on an existing business credit account, unless the request seeks additional credit amounts.* Several SERs supported the Bureau's proposal under consideration to exclude renewals unless additional credit is requested; one SER also supported excluding solicitations.[338] Several SERs urged the Bureau to exclude line increases as a distinct type of application, explaining that financial institutions may not require a new application for such requests and that underwriting a line increase request is substantively distinct from underwriting a request for new credit because a line increase extensively relies on past performance data and prior relationships. Due to these differences, one SER suggested that including line increases may skew 1071 data, causing misinterpretations. The SBREFA Panel recommended the Bureau seek comment on whether to include line increases as a separate reportable application.[339] The SBREFA Panel also recommended that the Bureau seek comment on how financial institutions currently handle increases in lines of credit.[340]

A number of other industry stakeholders also supported the Bureau's proposal under consideration to exclude reevaluations, extensions, and renewal requests (except requests for additional credit amounts). The commenters stated that such collection would be duplicative since financial institutions would also be reporting data on the original application (perhaps in the same reporting year). The commenters also noted that extension requests are often short term and granted without a full application process, that requiring reporting could lead to fewer financial institutions offering extensions due to the added collection and reporting burden (particularly for open-ended credit), and that providing an exemption would be consistent with HMDA reporting. One commenter sought exclusion of rate adjustments. Community group commenters opposed exclusion of reevaluations, renewals, and extensions.

Several industry commenters opposed 1071 collection and reporting on reevaluations, extensions, or renewals that seek additional credit amounts. These commenters stated that 1071 collection and reporting should focus on data collected at the time of origination, that collecting data repeatedly from the same borrowers would add burden, and that collecting data for line increases would make it difficult for financial institutions to provide timely approvals. One commenter suggested only reporting on additional credit amounts if the original note is replaced. Other industry commenters—while not explicitly opposing such collection—suggested the Bureau further consider whether increases or renewals with additional credit amounts should be an ''application'' for purposes of the rule. The commenters noted that such increases/renewals are typically more streamlined than a standard application given the financial institution already has the applicant's information in its possession, and that the Bureau should carefully balance burden (which could

[336] Although certain regulations define an ''application'' as a set of specific data points (*e.g.,* name, income, property address, estimated property value, etc.), many of the data points in those regulations are specific to the mortgage context and would not be applicable to small business lending. These regulations also do not relate to data collection. *See, e.g.,* Regulation X § 1024.2(b) and Regulation Z § 1026.2(a)(3).

[337] SBREFA Outline at 22–24.

[338] The SER feedback discussed in this section-by-section analysis can be found in the SBREFA Panel Report at 24–25.

[339] *Id.* at 45–46.

[340] *Id.*

affect how such requests could be processed) with benefit (obtaining additional data on the same applicant). One industry representative supported collection on requests that include additional credit amounts. Another commenter sought clarification on what would be reported in such circumstances: The newly advanced funds or the entire outstanding amount.

*Inquiries and prequalification requests.* Several SERs urged the Bureau not to require reporting on prequalifications or inquiries. These SERs explained that they encounter a high number of inquiries from rate shoppers asking about qualification requirements and potential rates, many of which are abandoned or otherwise do not progress to a completed application.[341] A significant number of other industry commenters also supported the Bureau's proposal under consideration to exclude inquiries and prequalifications. These commenters noted that such inquiries could include countless informal interactions that would be difficult to collect in a consistent manner and that may lead to misleading or erroneous data. The commenters also stated that collection would be duplicative and impose significant burden without countervailing benefits. Community group commenters expressed support for collecting data on inquiries and prequalifications to identify discrimination that occurs before an application is submitted.

*Solicitations and firm offers of credit.* A number of industry commenters supported exclusion of solicitations and firm offers of credit. One commenter noted that excluding such data would avoid duplicative steps and be consistent with the purposes of section 1071.

Proposed Rule

Proposed § 1002.103(b) would identify certain circumstances that are not covered applications—even if they otherwise would be considered an application under existing § 1002.2(f). Specifically, the Bureau is proposing that a covered application does not include (1) reevaluation, extension, or renewal requests on an existing business credit account, unless the request seeks additional credit amounts; and (2) inquiries and prequalification requests. As discussed below, solicitations and firm offers of credit would also not be ''covered applications'' under the proposed definition. The Bureau is also proposing comments 103(b)–1 through –5 to provide additional guidance and examples of circumstances that do and do not trigger 1071 collection and reporting as a covered application. For example, proposed comment 103(b)–4 clarifies that the term ''covered application'' does not include evaluations or reviews of existing accounts initiated by the financial institution.

*Reevaluation, extension, or renewal requests on an existing business credit account, unless the request seeks additional credit amounts.* The Bureau is proposing to exclude from the definition of a ''covered application'' requests by borrowers to modify the terms or duration of an existing extension of credit, other than (as explained below) requests for additional credit amounts. The Bureau believes that requests to modify the terms or duration of an existing extension of credit, which occur with high frequency in the small business lending space, may add complexity and burden for financial institutions, while potentially providing limited additional information relevant to the purposes of section 1071. Moreover, broadly including requests to modify the terms or duration of existing extensions of credit might affect the quality of the data absent additional flags to distinguish the transactions from new originations. The Bureau is also concerned about the impact of adding 1071 collection and reporting requirements to what are otherwise streamlined evaluations, particularly given the limited additional data that would be gained from such reporting. The Bureau also notes that Regulation C takes a similar approach by excluding reporting of loan modifications.[342]

In contrast, the Bureau is not proposing to exclude requests for additional credit amounts (such as line increases or new money on existing facilities). That is, reporting would be required for requests for additional credit amounts. The Bureau believes that capturing requests for additional credit amounts will further the purposes of section 1071, particularly the community development purpose, as it would more accurately capture demand for credit. Although several SERs and other commenters opposed reporting on new credit amounts—due to the potentially streamlined nature of such reviews (which may differ from underwriting of new applications) and concerns about duplicative reporting—the Bureau believes these factors do not outweigh the potential community development benefits of reporting and collection. Moreover, the Bureau believes that concerns about duplicative reporting would be mitigated by proposed § 1002.107(c)(2), which would permit a financial institution to reuse certain data points under certain circumstances. In addition, under proposed § 1002.107(a)(7) and (8), when reporting a covered application that seeks additional credit amounts on an existing account, the financial institution would only report the additional credit amount sought (and approved or originated, as applicable), and not the entire credit amount extended. A request to withdraw additional credit amounts at or below a previously approved credit limit amount on an existing open-end line of credit would not be a covered application as the request falls within the terms of a previously approved covered credit agreement.

*Inquiries and prequalification requests.* Existing Regulation B recognizes that before a consumer or business requests credit in accordance with the procedures used by a creditor for the type of credit requested, a creditor may provide a prospective applicant with information about credit terms. Existing Regulation B comments 2(f)–3 and 9–5 refer to these situations as inquiries and prequalification requests. Generally, an inquiry occurs when a consumer or business requests information about credit terms offered by a creditor; a prequalification request generally refers to a request by a consumer or business for a preliminary determination on whether the prospective applicant would likely qualify for credit under a creditor's standards or for what amount.[343] Under existing Regulation B comments 2(f)–3 and 9–5, an inquiry or prequalification request may become an ''application'' that triggers adverse action notification requirements if the creditor evaluates information about the consumer or business, decides to decline the request, and communicates this to the consumer or business; otherwise, such inquiries and prequalification requests are generally not considered applications under existing Regulation B. As explained in existing comment 2(f)–3,

[341] *Id.* at 24–25.

[342] *See* Regulation C comment 2(d)–2.

[343] *See also* Regulation C comment 2(b)–2 (describing prequalification requests). In addition, a preapproval as described in existing comment 2(f)–5.i of Regulation B is an example of an application under existing Regulation B. Under that comment, a preapproval occurs when a creditor reviews a request under a program in which the creditor, after a comprehensive analysis of an applicant's creditworthiness, issues a written commitment valid for a designated period of time to extend a loan up to a specified amount. If a creditor's program does not provide for giving written commitments, requests for preapprovals are treated as prequalification requests.

whether the inquiry or prequalification request becomes an application depends on how the creditor responds to the consumer or business, not on what the consumer or business says or asks.

Regulation C excludes all prequalification requests from HMDA reporting, even if the prequalification request becomes an application under existing Regulation B.[344] Regulation C does not address reporting of inquiries more generally.

The Bureau is proposing to exclude inquiries and prequalification requests as a ''covered application,'' even if the inquiry or prequalification request may become an ''application'' under existing § 1002.2(f) that may trigger notification requirements. The Bureau agrees with SERs and other commenters that requiring data collection for all inquiries and prequalifications could create operational challenges given that such interactions may be voluminous and typically occur before a financial institution has the relevant data or processes in place for tracking requests for credit. The Bureau is likewise concerned that requiring the collection of 1071 data for these requests could pose data accuracy issues, given the often informal nature of these interactions, which may raise the risk of missing, unavailable, or erroneous data. In addition, reporting of inquiries and prequalifications could be duplicative if the applicant subsequently applies for credit in accordance with the procedures designated by the financial institution.

The Bureau also has concerns about requiring reporting of inquiries and prequalification requests only in situations that would otherwise be treated as an ''application'' under existing Regulation B—*i.e.,* when the financial institution evaluates information about the consumer or business, decides to decline the request, and communicates this to the consumer or business. The Bureau is concerned that the logistics of reporting an inquiry or prequalification only in certain circumstances—if the institution evaluates the information, declines the request, and communicates it to the business—would be operationally challenging for financial institutions and could lead to data distortion as only denials would be captured. In these circumstances, a financial institution may prefer reporting all inquiries and prequalifications, which could lead to some of the challenges identified above. The Bureau is also considering the market effects of requiring reporting only for certain inquiries and prequalification requests, including whether it would cause financial institutions to restrict such interactions or services.

The Bureau, however, remains concerned about potential discrimination that may occur in these early interactions with a financial institution. In particular, the Bureau is concerned about excluding data on inquiries and prequalification requests when the financial institution evaluates information about a business and declines the request, which may be useful for identifying potential prohibited discouragement of or discrimination against applicants or prospective applicants.

On balance, the Bureau believes it is appropriate to interpret ''application'' as used in section 1071 to exclude inquiries and prequalification requests given the considerations identified above, including the timing and often informal nature of such interactions, the operational challenges of implementing such a definition, and related concerns about the reliability of the data.

Although the Bureau is proposing to exclude inquiries and prequalification requests from the definition of ''covered application,'' the Bureau notes that the relevant analysis of whether an inquiry or prequalification request is reportable focuses on how the financial institution structures, processes, and responds to such requests, not what they are called. For example, if a financial institution has a formalized process to screen businesses requesting credit and deny those it considers ineligible, a request for credit that goes through that process may be a ''covered application,'' even if the financial institution labels the review a ''prequalification'' request or an ''inquiry.''

The Bureau further notes that requests for credit that meet the proposed definition of ''covered application'' would be reportable, even if the application was preceded by an inquiry or prequalification request. For example, if a business initially seeks information about potential credit offerings, the financial institution responds, and then the business submits an application for a covered credit transaction following the financial institution's procedures, the application would be reportable. If, on the other hand, the business asks about potential credit offerings, but then chooses not to submit an application, there is no covered application.

Finally, the Bureau notes that inquiries and prequalification requests where the institution evaluates the information, declines the request, and communicates it to the business or consumer, are ''applications'' under existing Regulation B, and are thus subject to its requirements regarding ''applications,'' including its adverse action notification requirements and nondiscrimination provisions. In no way are the exclusions in proposed § 1002.103(b) intended to repeal, abrogate, annul, impair, change, or interfere with the scope of the term application in existing § 1002.2(f) as applicable to existing Regulation B.

*Solicitations and firm offers of credit.* Proposed comment 103(b)–4 would clarify that the term covered application does not include solicitations and firm offers of credit; like other reviews or evaluations initiated by the financial institution, these communications do not involve an *applicant* requesting credit, and so are not ''covered applications.'' Excluding solicitations and firm offers of credit is also consistent with the language of ECOA section 704B(b)(1), which provides that an application in response to a solicitation by a financial institution could be an application under section 1071, but the text is silent on solicitations without any applicant response. Thus, consistent with the statutory language, a solicitation or firm offer of credit may become a ''covered application'' under the proposed definition if an applicant responds to the solicitation or offer by requesting a covered credit transaction.

In conclusion and for the reasons identified above, the Bureau believes its proposed exclusion of inquiries and prequalification requests is reasonable. Similarly, the Bureau believes its proposed exclusion of reevaluation, extension, or renewal requests on an existing business credit account, unless the request seeks additional credit amounts, is a reasonable interpretation of an ''application'' as used in section 1071 for the reasons described above, including that the original extension of credit would be collected and reported and further reporting would yield limited additional data. The Bureau also believes its proposed treatment of solicitations and firm offers of credit is a reasonable interpretation of an ''application'' as used in section 1071, as discussed above.

The Bureau seeks comment on its proposed definition of a covered application in § 1002.103(b) and associated commentary. The Bureau also seeks comment on whether instead to define a ''covered application,'' consistent with existing Regulation B, to include inquiries or prequalification requests where the financial institution evaluates information about the business, decides to decline the request,

[344] *See* Regulation C comment 2(b)–2.

and communicates this to the business. Related to this alternative approach, the Bureau further seeks comment on whether additional data fields may be necessary in order to distinguish prequalification requests and inquiries from other reported applications. In addition, if the Bureau were to require reporting of declined inquiries or prequalification requests (as described above), the Bureau seeks comment on whether financial institutions would want the option to report all prequalification requests and inquiries, to allow for a comparison with denials.

In addition, the Bureau seeks comment on whether, alternatively, to define a ''covered application'' consistent with Regulation C, which (as discussed above) does not require a financial institution to report prequalification requests, even if those requests may constitute applications under existing Regulation B for purposes of adverse action notices, but does not address reporting of inquiries more generally. Related to this alternative approach, the Bureau also seeks comment on whether greater clarity could be achieved by defining, for purposes of proposed subpart B only, inquiries as requests for information about loan terms that do not become applications under existing Regulation B, and prequalification requests as requests that may become applications under existing Regulation B. In addition, the Bureau also seeks comment on the frequency with which financial institutions accept prequalification requests (as described in Regulation C comment 2(b)–2, but with respect to prospective business applicants) and what data are collected in connection with such prequalification requests, as well as potential effects on the market if some or all prequalification requests were reportable under section 1071.

Consistent with the SBREFA Panel's recommendation, the Bureau also seeks comment on whether to include line increase requests as a ''covered application'' and information on how financial institutions currently process requests for a line of credit increase. In addition to line increases, the Bureau also seeks comment on financial institution practices related to other types of requests for additional credit amounts, and whether such requests should be captured in 1071 data.

Lastly, the Bureau notes that Regulation C requires the reporting of assumptions for HMDA,[345] but the Bureau does not have information on whether assumptions are similarly used in the small business lending context. The Bureau seeks comment on this issue, including how an assumption in small business lending might be structured (for example, whether it is typically a modification of an existing extension of credit or a new extension of credit), the frequency of assumptions in the small business lending context, and whether reporting of assumptions for small business lending would further the purposes of section 1071.

Section 1002.104 Covered Credit Transactions and Excluded Transactions

104(a) Covered Credit Transaction

ECOA section 704B(b) requires financial institutions to collect and report information regarding any application for ''credit'' made by women-owned, minority-owned, or small businesses. Although the term ''credit'' is not specifically defined in section 1071, ECOA defines ''credit'' as ''the right granted by a creditor to a debtor to defer payment of debt or to incur debts and defer its payment or to purchase property or services and defer payment therefor.'' [346] As noted above in the section-by-section analysis of § 1002.102(d), existing Regulation B further defines ''business credit'' as ''extensions of credit primarily for business or commercial (including agricultural) purposes,'' with some exclusions.[347] As discussed in detail below, the Bureau is proposing to require that covered financial institutions report data for all applications for transactions that meet the definition of business credit unless otherwise excluded. Proposed § 1002.104(a) would define the term ''covered credit transaction'' as an extension of business credit that is not an excluded transaction under proposed § 1002.104(b). Loans, lines of credit, credit cards, and MCAs (including such credit transactions for agricultural purposes and HMDA-reportable transactions) would all fall within the scope of this proposed rule, which would cover the majority of products that small businesses use to obtain financing.[348] As such, the Bureau believes that the inclusion of these products in the Bureau's 1071 rule is important to fulfilling the purposes of section 1071. Pursuant to this approach, the Bureau notes that the products discussed below do not constitute an exhaustive list of covered credit transactions; other types of business credit not specifically described below would nevertheless constitute covered credit transactions unless excluded by proposed § 1002.104(b).

Proposed § 1002.104(b), in turn, would state that the requirements of subpart B do not apply to trade credit, public utilities credit, securities credit, and incidental credit. Associated commentary would make clear that the term ''covered credit transaction'' also does not cover factoring, leases, consumer-designated credit used for business purposes, or credit secured by certain investment properties.

For the reasons set forth below, the Bureau is proposing § 1002.104 pursuant to its authority under ECOA section 704B(g)(1) to prescribe such rules and issue such guidance as may be necessary to carry out, enforce, and compile data under section 1071.

In the SBREFA Outline, the Bureau stated that it was considering proposing that a covered product under section 1071 is one that meets the definition of ''credit'' under ECOA and is not otherwise excluded from collection and reporting requirements.[349] Specifically, the Bureau stated that it was considering proposing that covered products under section 1071 would include term loans, lines of credit, and credit cards. The Bureau stated that term loans, lines of credit, and credit cards meet the definition of ''credit'' under ECOA and these products collectively make up the majority of business financing products used by small businesses and are an essential source of financing for such businesses.[350] The Bureau also proffered in the SBREFA Outline that the inclusion of these products in the Bureau's 1071 rule is important to fulfilling the purposes of section 1071.[351] The Bureau also stated in SBREFA Outline that it was considering proposing that the following products *not* be covered by the 1071 rule: consumer credit used for business purposes; leases; trade credit; factoring; and MCAs.[352]

SERs and other stakeholders providing feedback on the SBREFA Outline generally supported the Bureau's proposal under consideration to include term loans, lines of credit, and credit cards as covered products under section 1071.[353] Many stakeholders (including roughly half the SERs) urged the Bureau to pursue

[345] *See* Regulation C comment 2(j)–5 (discussing when assumptions should be reported as home purchase loans).

[346] 15 U.S.C. 1691a(d); *see also* § 1002.2(j).

[347] 12 CFR 1002.2(g).

[348] *See* White Paper at 21–22.

[349] SBREFA Outline at 19–20.

[350] *Id.* at 20.

[351] *Id.*

[352] *Id.*

[353] The SER feedback discussed in this section-by-section analysis can be found in the SBREFA Panel Report at 22–23.

expansive product coverage in order to adequately capture small businesses' experiences with obtaining financing, especially for women-owned and minority-owned small businesses. Many SERs and other stakeholders advocated for including MCAs within the scope of the eventual 1071 rule; some SERs and stakeholders also advocated for including factoring, and in some cases leases as well, in order to capture the full landscape of small business financing. Multiple stakeholders expressed concern that the exclusions under consideration for certain products (*e.g.,* MCAs) would disproportionately burden traditional lenders who do not offer such products.

As discussed below, the Bureau proposes that the 1071 rule cover loans, lines of credit, credit cards, and MCAs. The Bureau also explains below that ''covered credit transaction'' would encompass agricultural-purpose credit and HMDA-reportable transactions.

*Loans, lines of credit, and credit cards.* As noted above, stakeholders generally presume and support the coverage of loans, lines of credit, and credit cards. These products are commonly offered to small business applicants (making up almost 60 percent of the aggregate dollar volume of various financial products used by small businesses).[354] The Bureau is not proposing definitions for loans, lines of credit, and credit cards because the Bureau believes these products are generally and adequately covered by the proposed definition of ''credit'' in proposed § 1002.102(i).[355]

The Bureau seeks comment on its proposed approach to covered credit transactions and particularly on whether it should define loans, lines of credit, and credit cards, and, if so, how.

*Merchant cash advances.* MCAs are a form of financing for small businesses that purport to be structured as a sale of potential future income. MCAs vary in form and substance, but under a typical MCA, a merchant receives a cash advance and promises to repay it plus some additional amount or multiple of the amount advanced (*e.g.,* 1.2 or 1.5, the ''payback'' or ''factor'' ''rate''). The merchant promises to repay by either pledging a percentage of its future revenue, such as its daily credit and debit card receipts (the ''holdback percentage''), or agreeing to pay a fixed daily withdrawal amount to the MCA provider until the agreed upon payment amount is satisfied. MCA contracts often provide for repayment directly through the merchant's card processor and/or via ACH withdrawals from the merchant's bank account.[356] MCAs constitute the primary product under an umbrella that the Bureau refers to as ''sales-based financing''; generally, transactions wherein a financial institution extends funds to a business and repayment is based on the business's anticipated sales, revenue, or invoices.[357]

The Bureau understands that the MCA market is generally dominated by nondepository lenders not subject to Federal safety and soundness supervision or reporting requirements. The Bureau also understands that MCA providers may not be required to obtain State lending licenses. As a result, information on MCA lending volume and practices is limited. The Bureau notes, however, that California recently enacted a law that brings providers of commercial financing options, including factoring and MCAs, into the California Financing Law (CFL), which will impose disclosure requirements.[358] New York also enacted a law that would impose similar disclosure requirements upon certain New York commercial financing providers, including MCA providers.[359]

Although the Bureau's 2017 White Paper estimated the MCA market constituted less than 1 percent of the aggregate dollar volume of various financial products used by small businesses in the U.S. in 2014,[360] the Bureau finds that more recent evidence suggests the industry may now be much larger. For example, the 2020 Federal Reserve Banks' survey of firms with 1–499 employees (''employer firms'') found that 8 percent of such businesses applied for and regularly used MCAs.[361] Moreover, on August 18, 2019, the trade website deBanked reported that according to an investment bank's projections, ''the MCA industry will have more than doubled its small business funding to $19.2 billion by year-end 2019, up from $8.6 billion in 2014.'' [362]

Based on stakeholder feedback and available data, the Bureau understands that MCAs are often used by merchants due to the speed and ease with which they can be obtained,[363] particularly for merchants unable to obtain financing from more traditional sources.[364] According to the 2020 Federal Reserve Banks' report regarding firms owned by people of color (both small employer firms and non-employer firms), Black-owned firms, Hispanic-owned firms, and Asian-owned firms were more likely to have applied for MCAs (14 percent, 10 percent, and 10 percent

[354] *See id.* at 21 fig. 2.

[355] As noted in the section-by-section analysis of proposed § 1002.107(a)(5) below, the Bureau distinguishes between secured and unsecured loans and lines of credit when financial institutions report the type of credit product being applied for. The Bureau does not believe that this distinction has relevance to whether these products constitute ''credit.''

[356] This description is based on the Bureau's review of a sample of MCA contracts that the Bureau believes fairly represent typical MCA contracts in the market. The Bureau's review comports with observations made by industry and community groups regarding MCAs.

[357] As stated below, the Bureau is not proposing to specifically define sales-based financing in the 1071 rule because the Bureau believes these products are covered by the proposed definition of ''credit'' in proposed § 1002.102(i). New York and California laws have recently sought to define sales-based financing. New York law, for example, defines ''sales-based financing'' as ''a transaction that is repaid by the recipient to the provider, over time, as a percentage of sales or revenue, in which the payment amount may increase or decrease according to the volume of sales made or revenue received by the recipient.'' N.Y. Fin. Serv. 801(j). New York's definition of sales-based financing also encompasses a true-up mechanism where the financing is repaid as a fixed payment but provides for a reconciliation process that adjusts the payment to an amount that is a percentage of sales or revenue. *Id.* California law uses a similar definition. *See* 10 Cal. Code Reg. 2057(a)(22) (defining sales-based financing as ''a commercial financing transaction that is repaid by a recipient to the financer as a percentage of sales or income, in which the payment amount increases and decreases according to the volume of sales made or income received by the recipient'' and including ''a true-up mechanism'').

[358] The new law does not go so far as to amend the CFL to require factors or MCA providers to be licensed, but it does impose first-in-the-nation disclosure requirements in connection with these products similar to those imposed under TILA. *See* Cal. S.B. 1235 (Sept. 30, 2018), *https://leginfo.legislature.ca.gov/faces/billTextClient.xhtml?bill_id=201720180SB1235.* The law will be implemented through regulations, which have not been finalized yet. *See* State of Cal. Dep't of Bus. Oversight (DBO), *Draft Regulations* (July 26, 2019), *https://dbo.ca.gov/wp-content/uploads/sites/296/2019/07/SB-1235-Draft-Regulations-7-26-19.pdf.*

[359] N.Y. S.B. S5470B (Dec. 23, 2020), *https://legislation.nysenate.gov/pdf/bills/2019/S5470B.*

[360] *See* White Paper at 21 fig. 2, 22 fig. 3.

[361] Fed. Reserve Banks, *Small Business Credit Survey—2021 Report on Employer Firms,* at 24 (Feb. 3, 2021), *https://www.fedsmallbusiness.org/medialibrary/FedSmallBusiness/files/2021/2021-sbcs-employer-firms-report* (2021 Small Business Credit Survey). Starting in 2017, the Federal Reserve Banks began to gather specific data on MCAs for its annual reports on small business financing for employer firms—in the 2017 report, the survey found that 7 percent of such businesses applied for and regularly used MCAs. Fed. Reserve Banks, *Small Business Credit Survey—2017 Report on Employer Firms,* at 9 (Apr. 11, 2017), *https://www.fedsmallbusiness.org/medialibrary/fedsmallbusiness/files/2018/sbcs-employer-firms-report.pdf* (2017 Small Business Credit Survey).

[362] Paul Sweeney, *Gold Rush: Merchant Cash Advances Are Still Hot,* deBanked (Aug. 18, 2019), *https://debanked.com/2019/08/gold-rush-merchant-cash-advances-are-still-hot/.*

[363] *See* 2021 Small Business Credit Survey at 26 (reporting that 84 percent of surveyed credit applicants were approved for an MCA, as compared to a 43 percent approval rate for personal loans).

[364] *See id.* at 22 (noting that only 7 percent of ''high credit risk'' applicants obtained all the financing sought).

respectively) than white-owned firms (7 percent).[365] The Bureau believes that this report supports stakeholders' assertions that minority-owned businesses are more likely to use MCAs.

The Bureau believes that the higher frequency of MCA use among minority-owned businesses coupled with reports of problematic provider practices lends credence to many stakeholders' claims that MCAs may raise fair lending concerns. The FTC released a Staff Perspective in February 2020 discussing its concerns with the MCA industry[366] and noting the industry's tendency to ''cater to higher-risk businesses or owners with low credit scores—typically offering them higher-cost products.''[367] The FTC has also filed enforcement actions against MCA providers and their principals, in one case alleging that they misrepresented the terms of MCAs that they provided, and then used ''unfair collection practices, including sometimes threatening physical violence, to compel consumers to pay.''[368] The FTC recently obtained a settlement that requires an MCA provider to pay more than $9.8 million to settle charges that it took money from businesses' bank accounts without permission and deceived them about the amount of financing business owners would receive and other features of its financing products.[369] Moreover, the Bureau understands that the default rate amongst small businesses that use MCAs is relatively high—5 to 15 percent according to one estimate (compared with a 2 percent default rate on SBA loans).[370] The Bureau believes this high default rate may be explained by the fact that the typical MCA holdback percentage—10 to 20 percent of gross receipts or revenues—may be onerous for already cash-strapped small businesses.[371] The Bureau also understands that it is not uncommon for small businesses that use MCAs to obtain new MCAs from other MCA providers (more than a quarter of such businesses, by one account);[372] they also may use one MCA to pay off another. Firms that take on added debt loads in this way (a process known as ''stacking'') ''may not fully recognize the costs involved, which could potentially jeopardize the financial health of their businesses.''[373]

As small businesses struggle with the COVID–19 pandemic, the Bureau is seeing more reports of MCA providers employing aggressive collection practices, such as ''pursuing legal claims against owners that freeze their bank accounts and . . . pressing their family members, neighbors, insurers, distributors—even their customers.''[374] Given the fact that 84 percent of the credit applicants surveyed by the Federal Reserve Banks were approved for an MCA[375] and the fact that it appears significantly more difficult to obtain credit as a ''high credit risk'' applicant during the COVID–19 pandemic,[376] the Bureau believes that vulnerable small businesses are increasingly seeking MCAs to support their pandemic recovery.

In its SBREFA Outline, the Bureau stated that it was considering proposing that MCAs not be a covered product under section 1071 since including them may add additional complexity or reporting burden given the unique structure of the transactions.[377]

During and following the SBREFA Panel meetings, many SERs advocated for including MCAs within the scope of the 1071 rule due, in part, to their widespread use by small businesses in the same way as traditional loans. In response to the SBREFA Outline, many other stakeholders, including community groups and industry representatives, urged the inclusion of MCAs for one or more of the following reasons:

- MCAs are widely used by small businesses and have a rapidly growing market share.
- MCAs are often advertised as loans even though MCA providers have been strongly opposed to labeling their products as loans.
- The complexity of MCAs is not a good reason to exclude them from coverage.
- Minority-owned small businesses disproportionately use MCAs.
- Excluding the largely unregulated MCA industry would create unequal regulatory burdens for entities that may compete for the same small business clients.
- MCAs should be considered ''credit'' for the purposes of section 1071.
- Small businesses do not distinguish these products from other forms of financing.
- Some MCA providers engage in harmful practices and should be subject to oversight.

The Bureau observes that, throughout the development of the 1071 rule, MCAs have been the focus of significant attention and a unique source of near-consensus among a diverse array of stakeholders—almost all of whom advocated for covering MCAs in the 1071 rule.[378] The only commenters that have supported the exclusion of MCAs from the 1071 rule were MCA providers or trade associations representing MCA providers. These stakeholders argue that MCAs do not meet the definition of

[365] Small Business Credit Survey of Firms Owned by People of Color at 30.

[366] Fed. Trade Comm'n, *'Strictly Business' Forum, Staff Perspective,* at 6–8 (Feb. 2020), *https://www.ftc.gov/system/files/documents/reports/staff-perspective-paper-ftcs-strictly-business-forum/strictly_business_forum_staff_perspective.pdf.*

[367] *See id.* at 2.

[368] Press Release, Fed. Trade Comm'n, *New York-Based Finance Companies Deceived Small Businesses, Non-Profits and Seized Their Personal and Business Assets* (June 10, 2020), *https://www.ftc.gov/news-events/press-releases/2020/06/new-york-based-finance-companies-deceived-small-businesses. See also* Press Release, Fed. Trade Comm'n, *FTC Alleges Merchant Cash Advance Provider Overcharged Small Businesses Millions* (Aug. 3, 2020), *https://www.ftc.gov/news-events/press-releases/2020/08/ftc-alleges-merchant-cash-advance-provider-overcharged-small.*

[369] Press Release, Fed. Trade Comm'n, *Cash Advance Firm to Pay $9.8M to Settle FTC Complaint It Overcharged Small Businesses* (Apr. 22, 2021), *https://www.ftc.gov/news-events/press-releases/2021/04/cash-advance-firm-pay-98m-settle-ftc-complaint-it-overcharged.*

[370] Kevin Voigt, *It's the Wild West Out There: NerdWallet Special Report,* NerdWallet (Oct. 13, 2016), *https://www.nerdwallet.com/blog/small-business-special-report-mca/.*

[371] *See* Bd. of Governors of the Fed. Reserve Sys., *Browsing to Borrow: ''Mom & Pop'' Small Business Perspectives on Online Lenders,* at 9 (June 2018), *https://www.federalreserve.gov/publications/files/2018-small-business-lending.pdf* (Board Small Business Perspectives) (noting that when asked ''about the toughest part of running their businesses, most participants cited the challenges of managing their cash flow''); *id.* at 5 (noting that ''[s]ome observers have argued that the owner's loss of control over cash flow puts some small businesses at risk''). The Bureau also notes that many MCA providers believe that they are not subject to State usury laws.

[372] *See* Opportunity Fund, *Unaffordable and Unsustainable: The New Business Lending,* at 3 (May 2016), *https://www.leg.state.nv.us/App/InterimCommittee/REL/Document/13129* (stating that ''[m]ore than a quarter of the businesses in our dataset had loans outstanding with multiple alternative lenders'').

[373] Board Small Business Perspectives at 6.

[374] Gretchen Morgenson, *FTC official: Legal 'loan sharks' may be exploiting coronavirus to squeeze small businesses,* NBC News (Apr. 3 2020), *https://www.nbcnews.com/business/economy/ftc-official-legal-loan-sharks-may-be-exploiting-coronavirus-squeeze-n1173346.*

[375] *See* 2021 Small Business Credit Survey at 26.

[376] *Compare id.* at 22 (noting that only 7 percent of ''high credit risk'' applicants obtained all the financing sought), *with* Fed. Reserve Banks, *Small Business Credit Survey—2020 Report on Employer Firms,* at 12 (Apr. 7, 2020), *https://www.fedsmallbusiness.org/medialibrary/FedSmallBusiness/files/2020/2020-sbcs-employer-firms-report* (reporting that 23 percent of ''high credit risk'' applicants obtained all the financing sought) (2020 Small Business Credit Survey).

[377] SBREFA Outline at 22.

[378] For instance, of the substantive responses to the 2017 RFI, comments authored or co-authored by dozens of stakeholders (including community and business groups, industry, and trade associations) expressed explicit support for requiring the reporting of MCAs (and additional letters expressed support for covering ''fintech'' or ''alternative online'' products more generally).

credit under ECOA or State law and are instead much like traditional factoring arrangements, which are generally understood not to be credit.

Potential coverage of MCAs under the 1071 rule has also drawn the attention of government entities seeking to regulate the industry. For example, in response to the SBREFA Outline, the California Department of Financial Protection and Innovation submitted a comment letter stating that ''nearly all the data points would be just as easy for an MCA company to report as any other financial institution.'' In addition, FTC staff submitted a comment letter in response to the Bureau's Request for Information on the Equal Credit Opportunity Act and Regulation B [379] noting that the FTC has brought many actions protecting small businesses but that detecting illegal conduct in this space can be challenging, particularly with regard to MCAs. The FTC comment letter urges the Bureau to remind small business lenders that whether a particular law applies depends on actual facts and circumstances and not solely on how one party chooses to characterize the transaction. FTC staff also recommends the Bureau help small businesses through data collection, collecting complaints, and education.

Upon further consideration and in light of stakeholder feedback provided during the SBREFA process, the Bureau is proposing to cover MCAs as reportable under 1071. The Bureau believes that the statutory term ''credit'' in ECOA is ambiguous as to whether it covers sales-based financing products like MCAs, and existing Regulation B offers no further clarity except to note in commentary that factoring, as ''a purchase of accounts receivable,'' is not covered by ECOA or Regulation B.[380] Based on its review of typical MCA arrangements and its expertise with respect to the nature of credit transactions, the Bureau believes that the better reading of the term ''credit'' is that it encompasses MCAs and other types of sales-based financing. As noted above, ECOA defines ''credit'' to mean ''the right granted by a creditor to a debtor to defer payment of debt or to incur debts and defer its payment or to purchase property or services and defer payment therefor.'' The Bureau is thus not proposing to specifically define MCAs or other sales-based financing in the 1071 rule because the Bureau believes these products are covered by the proposed definition of ''credit'' in § 1002.102(i). Nor does the Bureau believe that MCAs should be excluded from the rule as a species of factoring (as defined in proposed comment 104(a)–2), because MCAs are not based on accounts receivable from ''goods that the recipient has supplied or services that the recipient has rendered.''

As an initial matter, the Bureau believes that MCAs do not constitute factoring within the meaning of the existing commentary to Regulation B or the definition in proposed comment 104(b)–1, discussed in greater detail below. In factoring transactions, entities receiving financing sell their legal right to payment from a third party for goods supplied or services rendered, and that right exists at the time of the transaction itself; the provider of funds seeks payment directly from the third party, and the transaction between the recipient and the provider of funds is complete at the time of the sale. In other words, the recipient of the financing has no remaining payment obligation, meaning that no payment is deferred. In contrast, at the time of the advance in an MCA, the recipient of the financing has no existing rights to payment that it can transfer. The transaction thus constitutes only a promise by the ''seller'' to transfer funds to the ''buyer'' once they materialize at a later date. The Bureau believes that the ECOA definition of credit, by referring to the right to ''defer'' payments, necessarily invokes this temporal consideration.

Furthermore, the Bureau interprets ECOA's definition of credit as making dispositive whether one party has granted another the right to repay at some time subsequent to the initial transaction, without consideration of factors such as the existence of recourse or analysis of who bears the risk of loss. MCA providers grant such a right: They advance funds to small businesses and grant them the right to defer repayment by allowing them to repay over time. Additionally, as a practical matter, the Bureau understands that MCAs are underwritten and function like a typical loan (*i.e.,* underwriting of the recipient of the funds; repayment that functionally comes from the recipient's own accounts rather than from a third party; repayment of the advance itself plus additional amounts akin to interest; and, at least for some subset of MCAs, repayment in regular intervals over a predictable period of time).

Finally, the Bureau believes that the inclusion of MCAs in the Bureau's 1071 rule is important to fulfilling both the fair lending and the business and community development purposes of section 1071.[381] The Bureau also believes that including MCAs would create a more level playing field across financial institutions that provide cash flow financing to small businesses as well as create a data set that better reflects demand for such financing by the smallest and most vulnerable businesses.

The Bureau seeks comment on its proposed approach to covered credit transactions, and in particular, on whether it should define MCAs and/or other sales-based financing transactions, and if so, how.

*Agricultural-purpose credit.* In the SBREFA Outline, the Bureau did not expressly address credit used for agricultural purposes, although such credit is generally covered by the broad definition of credit under ECOA and agricultural businesses are included in section 1071's definition of small business.[382] Based on questions from SERs about the Bureau's intended approach, however, the SBREFA Panel recommended that the Bureau address in the proposed rule whether it intends to cover agricultural loans in the eventual 1071 rule.[383] Moreover, in a July 2019 report, the U.S. Government Accountability Office (GAO) discussed its finding that information on the amount and types of agricultural credit to socially disadvantaged farmers and ranchers (SDFRs) [384] is limited, and suggested that the 1071 rulemaking may be a way to engage in ''additional data collection and reporting for nonmortgage loans.'' [385]

[379] 85 FR 46600 (Aug. 3, 2020).

[380] Existing comment 9(a)(3)–3.

[381] ECOA section 704B(a).

[382] ECOA section 704B(h)(2) (defining a small business as having the same meaning as the term ''small business concern'' in section 3 of the Small Business Act (15 U.S.C. 632)''). Section 704B(h)(2) defines small business by reference to the Small Business Act definition of a small business concern, which includes independently owned and operated ''enterprises that are engaged in the business of production of food and fiber, ranching and raising of livestock, aquaculture, and all other farming and agricultural related industries.'' 15 U.S.C. 632(a)(1).

[383] SBREFA Panel Report at 44.

[384] The U.S. Department of Agriculture (USDA) defines SDFRs as members of certain racial and ethnic minority groups and women. According to the GAO, USDA regulations further define SDFRs as belonging to the following groups: American Indians or Alaskan Natives, Asians, Blacks or African Americans, Native Hawaiians or other Pacific Islanders, Hispanics, and women. *See* Gov't Accountability Off., *Agricultural Lending: Information on Credit and Outreach to Socially Disadvantaged Farmers and Ranchers is Limited,* at 2 (2019), *https://www.gao.gov/assets/710/700218.pdf* (GAO Report). The Bureau notes that those five categories align with the Bureau's proposed categories used in the definition of ''minority individual'' in proposed § 1002.102(*l*).

[385] GAO Report at 16.

According to the 2017 Census of Agriculture,[386] there are about 3.4 million farmers and ranchers (''producers'') working on 2 million farming and ranching operations (''farms'') in the United States. The U.S. Department of Agriculture (USDA) Economic Research Service found that family farms (where the majority of the business is owned by the operator and individuals related to the operator) of various types together accounted for nearly 98 percent of U.S. farms in 2019.[387] Small family farms (less than $350,000 in gross cash farm income (GCFI)) accounted for 90 percent of all U.S. farms and large-scale family farms ($1 million or more in GCFI) make up about 3 percent of farms but 44 percent of the value of production.[388]

According to the 2019 Annual Report of the Farm Credit Administration, most agricultural lending (approximately 83 percent) is done by either commercial banks or the Farm Credit System (FCS), a network of government-sponsored entities (GSEs) regulated by the Farm Credit Administration, an independent government agency.[389] The USDA's Farm Service Agency accounts for a small share (3 percent) of agricultural credit through direct loans and guarantees of loans made by private lenders.[390]

The GAO found that, using 2015–2017 USDA survey data, SDFRs represented an estimated 17 percent of primary producers in the survey, but accounted for only an estimated 8 percent of total outstanding agricultural debt.[391] Loans to purchase agricultural real estate accounted for most of SDFRs' outstanding debt (67 percent).[392] Farms with minority or women primary producers [393] are, on average, smaller and bring in less revenue than farms with a non-SDFR primary producer (*i.e.,* a white male)—while SDFRs represented 30 percent of all farms, they operated 21 percent of total farm land and accounted for 13 percent of the market value of agricultural products sold in 2017.[394]

The share of minority representation in farming, particularly that of Black farmers, has declined sharply over the last 100 years.[395] The number of female producers has increased significantly over the last 100 years but remains relatively small compared to male farm producers.[396] Based on the disposition of numerous lawsuits alleging discrimination against minority farmers,[397] the Bureau believes that credit discrimination may play a role in this decline. The GAO cites SDFR advocacy groups, which have said some SDFRs face actual or perceived unfair treatment in lending or may be dissuaded from applying for credit because of past instances of alleged discrimination.[398] In addition, the GAO cites SDFR advocacy groups, lending industry representatives, and Federal officials in stating that SDFRs are more likely to operate smaller, lower-revenue farms, have weaker credit histories, or lack clear title to their agricultural land, which can make it difficult for them to qualify for loans.[399] The Bureau understands that determining the ''creditworthiness'' of a farmer is often a judgmental process in which lending decisions are de-centralized and involve weighing many discretionary factors, the Bureau believes that there are heightened fair lending risks in agricultural lending.

In light of the above, the Bureau believes that covering agricultural credit in its 1071 rule is important for both of section 1071's statutory purposes, and is not proposing to define covered credit in a way that would exclude agricultural credit from the rule. The Bureau seeks comment on the potential costs and complexities associated with covering such credit.

*HMDA-reportable transactions.* By adopting Regulation C's definition of dwelling and its commentary regarding investment properties, the Bureau seeks to ensure consistency and minimize compliance burdens for financial institutions that must also report credit transactions covered by HMDA (that is, HMDA-reportable transactions). Based on Bureau calculations using the 2019 HMDA data, the Bureau found that close to 2,000 lenders and around 530,000 applications indicated a ''business or commercial purpose'' and around 500,000 applications were used for an ''investment'' (as defined by the occupancy code) purpose. Of those applications, around 50,000 were for 5+ unit properties. The overall number of applications the Bureau expects to be reported annually under the proposed rule is around 26 million. Thus, the Bureau anticipates a relatively small but not insignificant overlap regarding real estate investment loans between HMDA and 1071.

The Bureau has considered excluding all transactions that were also reportable under HMDA, but believes such an exclusion would add complexity to data analysis. The Bureau understands that requiring lenders to find and delete from databases that supply their 1071 submission only those transactions that also appear in HMDA may require a separate scrub of the data and create additional compliance burden, as well as compliance risk if HMDA-reportable transactions are not deleted from a 1071 submission. For example, if the Bureau were to exclude HMDA reportable transactions from 1071 and a small business wants to purchase a 5+ dwelling unit property (that the financial institution would need to know is HMDA reportable), the

[386] The Census of Agriculture is conducted by the USDA every five years and provides a detailed picture of farms and the people who operate them. *See generally* U.S. Dep't of Agric., *2017 Census of Agriculture* (Apr. 2019), *https://www.nass.usda.gov/Publications/AgCensus/2017/Full_Report/Volume_1,_Chapter_1_US/usv1.pdf.*

[387] Econ. Research Serv., U.S. Dep't of Agric., *Farming and Farm Income* (updated May 10, 2021), *https://www.ers.usda.gov/data-products/ag-and-food-statistics-charting-the-essentials/farming-and-farm-income/.*

[388] *Id.*

[389] Farm Credit Admin., *2019 Annual Report of the Farm Credit Administration,* at 18 (2019), *https://www.fca.gov/template-fca/about/2019AnnualReport.pdf.*

[390] *Id.*

[391] GAO Report at 16. ''The primary producer is the individual on a farm who is responsible for the most decisions. Each farm has only one primary producer.'' *Id.* at 5.

[392] *Id.* at 2.

[393] ''Producers'' are individuals involved in farm decision-making. A single farm may have more than one producer.

[394] *See* GAO Report at 7.

[395] In 1910, approximately 893,370 Black farmers operated approximately 41.1 million acres of farmland, representing approximately 14 percent of farmers. U.S. Census Bureau, *1910 Census: Volume 5 (Agriculture), Statistics of Farms, Classified by Race, Nativity, and Sex of Farmers,* at 298 (1910), *https://www2.census.gov/library/publications/decennial/1920/volume-5/06229676v5ch04.pdf.* In 2017, of the country's 3.4 million total producers, only 45,508 of them (1.3 percent) are Black and they farm on only 4.1 million acres (0.5 percent of total farmland); by comparison, 95 percent of U.S. producers are white and own 94 percent of farmland. U.S. Dep't of Agric., *2017 Census of Agriculture,* at 62, 72 (Apr. 2019), *https://www.nass.usda.gov/Publications/AgCensus/2017/Full_Report/Volume_1,_Chapter_1_US/usv1.pdf.*

[396] In 1910, women farmers represented approximately 4 percent of farm workers. *See* U.S. Census Bureau, *1910 Census: Volume 5 (Agriculture), Statistics of Farms, Classified by Race, Nativity, and Sex of Farmers,* at 340 (1910), *https://www2.census.gov/library/publications/decennial/1920/volume-5/06229676v5ch04.pdf.* As of 2017, women account for approximately 36 percent of farmers. *See* U.S. Dep't of Agric., *2017 Census of Agriculture,* at 62 (Apr. 2019), *https://www.nass.usda.gov/Publications/AgCensus/2017/Full_Report/Volume_1,_Chapter_1_US/usv1.pdf.*

[397] *See, e.g.,* Order, *In re Black Farmers Discrimination Litig.,* No. 08–mc–0511 (D.D.C. filed Aug. 8, 2008), *https://blackfarmercase.com/Documents/2008.08.08%20-%20PLF%20Consolidation%20Order_0.pdf*; *Pigford* v. *Glickman,* 206 F.3d 1212 (D.C. Cir. 2000). *See also Garcia* v. *Vilsack,* 563 F.3d 519 (D.C. Cir. 2009); *Love* v. *Connor,* 525 F. Supp. 2d 155 (D.D.C. 2007); *Keepseagle* v. *Veneman,* No. 99–CIV–03119, 2001 U.S. Dist. LEXIS 25220 (D.D.C. Dec. 12, 2001).

[398] GAO Report at introductory highlights. Additionally, the GAO cited these sources as noting that some SDFRs may not be fully aware of credit options and lending requirements, especially if they are recent immigrants or new to agriculture. *Id.*

[399] *Id.*

financial institution would have to make sure it is not collecting protected demographic information on principal owners, even though that information must be collected for every other type of loan that same business might apply for. The Bureau also believes that it may not be possible to identify loans in the HMDA data that, but for this exclusion, would be reported under 1071 because the financial institution would need to know which HMDA applications are for small businesses versus large businesses. Moreover, excluding HMDA-reportable applications could mean that a financial institution that is below the HMDA reporting threshold would not report these loans at all.

Further, in addition to not being able to distinguish which applications are from small and not large businesses, the Bureau believes that excluding all transactions that were also reportable under HMDA may be at odds with the statutory purposes of section 1071. The following information will not be collected for applications only reported under HMDA: (1) The principal owner's race, sex, or ethnicity where the applicant is not a natural person; (2) minority-owned and women-owned business status; (3) gross annual revenue; and (4) other 1071 data points such as pricing, NAICS code, and number of workers. The Bureau is concerned that not collecting this information would run contrary to section 1071's fair lending and business and community development purposes.

For applications that would be reported under both HMDA and 1071 (generally, business credit secured by dwellings, with the exception of credit secured by 1–4 individual dwelling units that the applicant or one or more of the applicant's principal owners does not, or will not, occupy), the Bureau seeks comment on whether it should require such applications to be flagged as such when reported under subpart B. The Bureau believes that for data integrity and analysis purposes, it may be helpful to know if a loan is in both datasets and a dual reporting flag may help ensure any data analysis is not double-counting certain applications.

104(b) Excluded Transactions

Proposed § 1002.104(b) would provide that the requirements of subpart B do not apply to trade credit, public utilities credit, securities credit, and incidental credit. Proposed comments 104(b)–1 and –2 would make clear that the term covered credit transaction also does not cover factoring and leases. The proposed treatment of each of these types of transactions is discussed in detail below. Proposed comments 104(b)–3 and –4 would clarify that the term covered credit transaction does not include consumer-designated credit or credit secured by certain investment properties because, as discussed in detail below, such transactions are not business credit. The Bureau also discusses its proposed treatment of extensions of credit made to governments or governmental subdivisions, agencies, or instrumentalities and certain purchases of covered credit transactions. Finally, the Bureau discusses its proposed exclusions for trade credit, public utilities credit, securities credit, and incidental credit.

The Bureau seeks comment on whether it should permit financial institutions to voluntarily collect applicants' protected demographic information (that is, the applicant's minority-owned business status and women-owned business status, and the ethnicity, race, and sex of the applicant's principal owners) for applications for some or all of the types of transactions that the Bureau is proposing not to cover, and to report those applications to the Bureau pursuant to proposed § 1002.109.

*Factoring.* In traditional factoring arrangements, a business in need of financing sells all or a portion of its accounts receivable (existing but unpaid invoices) to another business, known as a ''factor.'' The factor then receives payments on the accounts receivable from the business's debtors or customers directly, and not from the business that had entered into the factoring transaction. If the business has sold only a portion of its invoices, then once the account debtors pay their invoices to the factor, the factor remits the remainder of the balance to the business after deducting a fee (specifically, a discount applied to the sold accounts receivable usually stated on a percentage basis).

The Bureau understands that like the market for MCAs, the factoring market is generally dominated by nondepository lenders not subject to Federal safety and soundness supervision or reporting requirements. The Bureau also understands that generally, factors may not be required to obtain State lending licenses. As a result, information on factoring volume and practices is limited. The Bureau notes, however, that the California and New York disclosure laws mentioned above cover factoring.[400]

The Bureau's 2017 White Paper estimated the factoring market as constituting around 8 percent of the number of accounts used by small businesses in the U.S. in 2014.[401] Based on more recent evidence, the Bureau believes the industry has not significantly grown. For example, the 2017 and 2020 Federal Reserve Banks' surveys of firms with 1–499 employees (''employer firms'') found that 4 percent of such businesses applied for and regularly used factoring.[402] In the 2020 Small Business Credit Survey of Employer Firms, this figure dropped to 3 percent of employer firms.[403]

In the SBREFA Outline, the Bureau stated that it was considering excluding factoring from coverage under the 1071 rule.[404] As a general matter, the Bureau received fewer comments from stakeholders regarding factoring compared to some other products, though some SERs did advocate for including factoring. Moreover, several stakeholders (representing both community group and industry perspectives) argued that factoring should be covered under section 1071: First, factoring is widely used by small businesses, particularly very small businesses, who are more likely to face heightened challenges accessing business credit; second, both New York and California have passed disclosure laws covering factoring and exclusion would potentially lead to a regulatory advantage for lenders offering higher-cost, less-transparent credit products.

A community group commenter stated that the Bureau should require the reporting of these agreements regardless of whether there is a credit agreement incident to the factoring agreement under Regulation B (this concept is discussed in more detail below). A few commenters that supported the proposed exclusion under consideration of factoring did so on the basis that factoring is not ''credit'' under ECOA. Commenters did not raise fair lending concerns or concerns about predatory practices related to factoring.

An existing comment in Regulation B (comment 9(a)(3)–3) provides that ''[f]actoring refers to a purchase of accounts receivable, and thus is not subject to [ECOA or Regulation B].'' Existing Regulation B does not offer a definition for ''accounts receivable.'' However, if there is a ''credit extension incident to the factoring arrangement,''

[400] *See* Cal. S.B. 1235 (Sept. 30, 2018), *https://leginfo.legislature.ca.gov/faces/billTextClient.xhtml?bill_id=201720180SB1235*; N.Y. S.B. S5470B (July 23, 2020), *https://legislation.nysenate.gov/pdf/bills/2019/S5470B*.

[401] White Paper at 21 fig. 2, 22 fig. 3.

[402] 2020 Small Business Credit Survey; 2017 Small Business Credit Survey.

[403] *See* 2021 Small Business Credit Survey at 24.

[404] SBREFA Outline at 22.

Regulation B's notification rules [405] apply, as do other relevant sections of ECOA and Regulation B.[406] The Bureau understands that the Board's treatment of credit extensions incident to factoring arrangements—as a type of credit but one entitled to exemptions from certain requirements—was motivated by its reading of congressional intent related to the Women's Business Ownership Act of 1988,[407] which amended ECOA to extend notification and record retention requirements to business credit. In its proposed rule on this issue, the Board explained that it was treating credit extensions incident to factoring arrangements differently from other forms of business credit based on ''evidence of congressional intent that the amendments should not apply to . . . certain types of business credit (such as applications for trade credit and credit incident to factoring arrangements).'' [408] Based on the Bureau's work to date and conversations with industry stakeholders, the Bureau understands that purported factoring arrangements may take various forms, including longer-term or revolving transactions that appear to have credit or credit-like features, and the Bureau believes that a subset of such arrangements may constitute credit incident to the factoring arrangement, particularly if they involve goods or services that have not been supplied or rendered.

The Bureau is proposing to not cover factoring under the 1071 rule. Modeled on the definitions set forth in the New York and California commercial financing disclosure laws,[409] proposed comment 104(b)–1 would provide that factoring is an accounts receivable purchase transaction between businesses that includes an agreement to purchase, transfer, or sell a legally enforceable claim for payment for goods that the recipient has supplied or services that the recipient has rendered but for which payment has not yet been made. Proposed comment 104(b)–1 would also clarify that an extension of business credit incident to a factoring arrangement is a covered credit transaction and that a financial institution shall report such a transaction as an ''Other sales-based financing transaction'' under proposed § 1002.107(a)(5).

The Bureau believes that, as discussed with respect to MCAs above, a traditional factoring agreement, as described in proposed comment 104(b)–1, is not credit under ECOA because the provider of the funds does not grant the recipient the right to defer payment. Instead, the provider of funds seeks payment directly from a third party, and the transaction between the recipient and the provider of funds is complete at the time of the sale. The Bureau also believes that treating factoring as credit under the 1071 rule could create inconsistencies and compliance concerns related to existing Regulation B, which currently states that factoring (as a purchase of accounts receivable) is not subject to ECOA. Moreover, while a few commenters did suggest covering factoring as part of a broader effort to adequately capture small businesses' experiences with obtaining financing, the Bureau notes that commenters did not raise particular fair lending concerns related to factoring. The Bureau is proposing a more detailed description of what constitutes factoring in proposed comment 104(b)–1 because it is concerned that the existing Regulation B commentary regarding factoring may not provide sufficient clarity for purposes of collecting and reporting data under section 1071 as it does not offer a definition for ''accounts receivable.'' Proposed comment 104(b)–1 would state that it is not intended to repeal, abrogate, annul, impair, or interfere with any existing interpretations, orders, agreements, ordinances, rules, or regulations adopted or issued pursuant to existing comment 9(a)(3)–3.

The Bureau seeks comment on its proposed approach to factoring. The Bureau also seeks comment on how the subset of purported factoring arrangements that may in fact be credit (*i.e.,* those that are revolving in nature or that cover anticipated receivables) should be reported under the 1071 rule. Specifically, the Bureau seeks comment on whether such arrangements should be reported as credit extensions incident to factoring (and thus reported ''other sales-based financing'') or as MCAs.

*Leases.* A leasing transaction generally refers to an agreement in which a lessor transfers the right of possession and use of a good or asset to a lessee in return for consideration.[410] Under a ''true'' or ''operating'' lease, a lessee (the user) makes regular payments to a lessor (the owner) in exchange for the right to use an asset (such as equipment, buildings, motor vehicles, etc.).

Leases are not expressly addressed in ECOA or Regulation B. The Bureau has never opined on whether ECOA and Regulation B apply to leases, and the Board made only one statement about the applicability of ECOA and Regulation B to leases, in the preamble to a final rule under ECOA. In that 1985 statement, the Board responded to the Ninth Circuit's opinion in *Brothers* v. *First Leasing,*[411] which concluded that consumer leasing falls under ECOA.[412] The Board stated that it believes that ''Congress did not intend the ECOA, which on its face applies only to credit transactions, to cover lease transactions unless the transaction results in a 'credit sale' as defined in the Truth in Lending Act and Regulation Z.'' [413] The Board then noted that it would continue to monitor leasing transactions and take further action as appropriate.[414] The Bureau is unaware of any such further actions taken by the Board.

The Bureau understands that many financial institutions (such as equipment finance companies) offer both loans and leases to their small business customers and some financial institutions comply with Regulation B for their leases as well as their loans as a matter of course. Lessor stakeholders have told Bureau staff that from their perspective, as well as that of their customers, loans and leases are indistinguishable. The Bureau understands that this is particularly true of ''financial'' or ''capital'' leases, as defined under article 2A of the UCC,[415] which closely resemble (and according to some stakeholders, in some cases are indistinguishable from) term loans. The Bureau understands that financial leases

[405] *See* existing § 1002.9(a)(3)(ii) (requiring a creditor to notify an applicant, within a reasonable time (as opposed to within 30 days for credit sought by consumers and businesses with gross revenues of $1 million or less in preceding fiscal year), orally or in writing, of the action taken).

[406] Comment 9(a)(3)–3.

[407] Public Law 100–533, 102 Stat. 2689 (1988).

[408] 54 FR 29734, 29736 (July 14, 1989); *see also* 134 Cong. Rec. H9282–89 (daily ed. Oct 3, 1988) (explaining that the committee recognizes that some forms of commercial loan transactions and extensions of credit may ''require specialized rules,'' and that, for example, the committee believes that loans and credit extensions incidental to trade credit, factoring arrangements, and sophisticated asset-based loans should continue to be exempted from the record retention and automatic notification requirements).

[409] *See* Cal. S.B. 1235 (Sept. 30, 2018), *https://leginfo.legislature.ca.gov/faces/billTextClient.xhtml?bill_id=201720180SB1235*; N.Y. S.B. S5470B (July 23, 2020), *https://legislation.nysenate.gov/pdf/bills/2019/S5470B.*

[410] *See* UCC Art. 2A–103(1)(j) (defining a ''lease'').

[411] 724 F.2d 789 (9th Cir. 1984).

[412] 50 FR 48018, 48020 (Nov. 20, 1985).

[413] *Id.*

[414] *Id.* Since then, courts have gone both ways on the issue. *Compare Ferguson* v. *Park City Mobile Homes,* No. 89–CIV–1909, 1989 WL 111916, at *5 (N.D. Ill. Sept. 18, 1989) (leases are ''credit'' under ECOA), *with Laramore* v. *Ritchie Realty Mgmt. Co.,* 397 F.3d 544, 547 (7th Cir. 2005) (leases are not ''credit'' under ECOA).

[415] The Bureau notes that the UCC separately defines a ''consumer lease.'' *See* UCC 2A–103(1)(e). The Bureau's analysis regarding leases does not apply to leases primarily for a personal, family, or household purpose.

are treated like assets on buyers' balance sheets, whereas operating leases are treated as expenses that remain off the balance sheet. The Bureau understands that the ownership characteristics of a financial lease also resemble those of a loan—the financial lease term is the substantial economic life of the asset (as evidenced by a one dollar purchase option at the end of the lease term and/or lack of residual financial obligations at the end of the lease term) and the lessee claims both interest and depreciation on their taxes. The Bureau understands that for some financial institutions, reporting loans but not leases may require added cost and effort to separate them in databases. The Bureau also understands that because depository institutions currently report both loan and lease activity to other regulators in their Call Reports, they may prefer to maintain a consistent approach for section 1071.

In its SBREFA Outline, the Bureau stated that it was considering proposing that leases not be a covered product under section 1071 unless the product is a credit sale.[416] The Bureau stated that for purposes of section 1071, it was considering proposing a definition of ''credit sale'' similar to the Regulation Z definition of that term as a transaction in which the lessor is a creditor and the lessee (i) agrees to pay as compensation for use a sum substantially equivalent to, or in excess of, the total value of the property and services involved; and (ii) will become (or has the option to become), for no additional consideration or for nominal consideration, the owner of the property upon compliance with the agreement.[417]

In response to the SBREFA Outline, several stakeholders argued that leases should be covered in an eventual 1071 rule, one noting that leasing products make up 13 percent of the small business financing market share in dollar terms. A few other stakeholders stated that leases should not be covered. For example, a trade association stated that (1) given the unique structure of the transactions, including leases would add unnecessary, additional complexity and reporting burdens, and that (2) unlike credit, in a lease, the lessee does not have an ownership interest in the leased property and that this difference could lead to data integrity issues.

The Bureau is proposing to not cover leases under the 1071 rule. Drawing from the UCC definition of ''lease,''[418] which was adopted by the New York and California commercial financing disclosure laws,[419] proposed comment 104(b)–2 would provide that the term covered credit transaction does not cover leases, and that a lease, for purposes of proposed subpart B, is a transfer from one business to another of the right to possession and use of goods for a term, and for primarily business or commercial (including agricultural) purposes, in return for consideration. It would further state that a lease does not include a sale, including a sale on approval or a sale or return, or a transaction resulting in the retention or creation of a security interest.

The Bureau considered several other approaches to covering leasing, including referring to Regulation Z's definition of ''credit sale.'' The Bureau understands that financial institutions focused on offering leases and loans for business purposes are generally not familiar with the Regulation Z definition of ''credit sale,'' given that Regulation Z applies only to consumer credit.[420] The Bureau thus believes that referring to the Regulation Z definition of ''credit sale'' could create confusion and would not align with current industry practices. The Bureau understands that such financial institutions offering leases primarily for business or commercial (including agricultural) purposes are more accustomed to applying the UCC definitions of ''lease''[421] and ''finance lease,''[422] and/or the generally accepted accounting principles (GAAP) rules issued by the Financial Accounting Standards Board (FASB) governing ''operating,'' ''capital,'' and ''finance'' leases.[423] The Bureau believes that drawing from the UCC definition of lease will lead to more consistency with financial institutions' current practices. Nearly all U.S. jurisdictions have adopted Article 2A of the UCC,[424] and the Bureau understands that virtually every form of lease used by major leasing companies provides that it is governed by the laws of one of the jurisdictions that has adopted Article 2A.

Based on its review of business-purpose leases and its expertise with respect to the meaning of ''credit,'' the Bureau believes that the better reading of the term ''credit'' is that it does not encompass such leases. In the business-purpose context, the Bureau understands that in a true lease, the lessor retains title and will receive the property back after the conclusion of the lease term, without any expectation by either party that, for example, ownership of the property will be transferred or that payments made pursuant to the lease agreement constitute anything other than payments in exchange for the temporary use of the property. As a result, the Bureau does not believe that in the business-purpose context a true lease transaction involves the right to incur debt and defer its payment, defer payment of a debt, or defer payment for goods or services.

The Bureau is aware that there are other types of leases with characteristics that bear some resemblance to forms of credit like credit sales, such as a contemplated transfer of ownership at the end of the lease term. The Bureau is not proposing at this time to parse whether different types of leases might

[416] SBREFA Outline at 21.

[417] *See* Regulation Z § 1026.2(16).

[418] UCC 2A–103(1)(j) (''Lease' means a transfer of the right to possession and use of goods for a term in return for consideration, but a sale, including a sale on approval or a sale or return, or retention or creation of a security interest is not a lease. Unless the context clearly indicates otherwise, the term includes a sublease.'').

[419] *See* Cal. S.B. 1235 (Sept. 30, 2018), *https://leginfo.legislature.ca.gov/faces/billTextClient.xhtml?bill_id=201720180SB1235*; N.Y. S.B. S5470B (July 23, 2020), *https://legislation.nysenate.gov/pdf/bills/2019/S5470B*.

[420] *See* Regulation Z § 1026.2(a)(12) (defining ''consumer credit'' as ''credit offered or extended to a consumer primarily for personal, family, or household purposes'') and 1026.3(a)(1) (excluding extensions of credit ''primarily for a business, commercial or agricultural purpose'').

[421] *Id.*

[422] UCC 2A–103(1)(g).

[423] *See* Fin. Acct. Standards Bd., *Accounting Standards Update: Leases (Topic 842),* No. 2016–02 (Feb. 2016), *https://www.fasb.org/jsp/FASB/Document_C/DocumentPage?cid=1176167901010&acceptedDisclaimer=true.*

[424] *See* Ala. Code 7–2A–101 *et seq.;* Alaska Stat. 45.12.101 *et seq.;* Ariz. Rev. Stat. 47–2A101 *et seq.;* Ark. Code Ann. 4–2A–101 *et seq.;* Cal. Com. Code 10101 *et seq.;* Choctaw Tribal Code 26–2A–101 *et seq.;* Colo. Rev. Stat. 4–2.5–101 *et seq.;* Conn. Gen. Stat. 42a–2A–101 *et seq.;* DC Code 28:2A–101 *et seq.;* Del. Code Ann. tit. 6, 2A–101 *et seq.;* Fla. Stat. 680.1011 *et seq.;* Ga. Code Ann. 11–2A–101 *et seq.;* Haw. Rev. Stat. 490:2A–101 *et seq.;* Idaho Code 28–12–101 *et seq.;* 810 Ill. Comp. Stat. 5/2A–101 *et seq.;* Ind. Code 26–1–2.1–101 *et seq.;* Iowa Code 554.13101 *et seq.;* Kan. Stat. Ann. 84–2a–101 *et seq.;* Ky. Rev. Stat. Ann. 355.2A–101 *et seq.;* Mass. Gen. Laws ch. 106, 2A–101 *et seq.;* Md. Code Ann., Com. Law 2A–101 *et seq.;* Me. Stat. tit. 11, 2–1101 *et seq.;* Mich. Comp. Laws 440.2801 *et seq.;* Minn. Stat. 336.2A–101 *et seq.;* Miss. Code Ann. 75–2A–101 *et seq.;* Mo. Rev. Stat. 400.2A–101 *et seq.;* Mont. Code Ann. 30–2A–101 *et seq.;* N.C. Gen. Stat. 25–2A–101 *et seq.;* N.D. Cent. Code 41–02.1–01 *et seq.;* N.H. Rev. Stat. Ann. 382–A:2A–101 *et seq.;* N.J. Stat. Ann. 12A:2A–101 *et seq.;* N.M. Stat. Ann. 55–2A–101 *et seq.;* N.Y. UCC Law 2–A–101 *et seq.;* Neb. Rev. Stat. UCC 2A–101 *et seq.;* Nev. Rev. Stat. 104A.2101 *et seq.;* Ohio Rev. Code Ann. 1310.01 *et seq.;* Okla. Stat. tit. 12A, 2A–101 *et seq.;* Or. Rev. Stat. 72A.1010 *et seq.;* Pa. Cons. Stat. 2A101 *et seq.;* R.I. Gen. Laws 6A–2.1–101 *et seq.;* S.C. Code Ann. 36–2A–101 *et seq.;* S.D. Codified Laws 57A–2A–101 *et seq.;* Tenn. Code Ann. 47–2A–101 *et seq.;* Tex. Bus. & Com. Code Ann. 2A.101 *et seq.;* Utah Code Ann. 70A–2a–101 *et seq.;* V.I. Code Ann. tit. 11A, 2A–101 *et seq.;* Va. Code Ann. 8.2A–101 *et seq.;* Vt. Stat. Ann. tit. 9A, 2A–101 *et seq.;* W. Va. Code 46–2A–101 *et seq.;* Wash. Rev. Code 62A.2A–101 *et seq.;* Wisc. Stat. 411.101 *et seq.;* Wyo. Stat. Ann. 34.1–2.A–101 *et seq.*

constitute ''credit'' but notes that proposed comment 104(b)–2's definition of lease would not include a sale, including a sale on approval or a sale or return, or a transaction resulting in the retention or creation of a security interest. The Bureau seeks comment on whether there are types of leases, or leases with certain characteristics, that should be excluded from proposed comment 104(b)–2 and thus treated as reportable under 1071. Based on the practical difficulty cited by some stakeholders of distinguishing leases from loans, the Bureau also seeks comment on whether financial institutions should be permitted to voluntarily report lease transactions.

*Consumer-designated credit.* In the SBREFA Outline, the Bureau stated that it was considering proposing that the 1071 rule not cover products designated by the creditor as consumer purpose products.[425] In response, several SERs asserted that consumer-designated credit is often an important source of financing for small businesses (particularly for women-owned and minority-owned small businesses, and sole proprietorships), and ideally should be included within the scope of the eventual 1071 rule. One SER stated that consumer-designated credit used for business purposes should be included in an eventual 1071 rule if trends show increasing usage. However, these SERs acknowledged the potential complexity and burden of trying to identify the intended use of consumer-designated credit, such as whether a consumer's home equity line of credit will be used for a business purpose.

Several SERs supported excluding consumer-designated credit. One SER asserted that including consumer credit would not support the purposes of section 1071. Another SER stated that including consumer-designated credit used for business purposes would double their cost of complying with an eventual 1071 rule. The SBREFA Panel recommended that the Bureau continue to explore the potential costs to financial institutions associated with reporting consumer-designated credit used for business purposes in the 1071 rule as well as the implications of including such credit in a small business lending data set.[426] The Panel also recommended that the Bureau seek comment in the proposed rule on how best to define consumer-designated credit in the event the Bureau determines that an exclusion for such products is appropriate.[427]

Many non-SER stakeholders supported the proposed exclusion under consideration of consumer-designated credit from section 1071 for one or more of the following reasons: First, that financial institutions should be able to rely on the applicant's stated purpose for the use of funds and institutions would not know, nor should they be expected to know, if a borrower instead starts or invests in a business using the proceeds of a personal loan. Second, that this approach would greatly simplify the regulatory effort necessary to define and identify business uses of consumer products. Third, that inclusion of consumer credit could vastly expand the scope of the data collected beyond usefulness and also greatly increase the costs of compliance.

One credit union trade association stakeholder stated that the Bureau should adopt a clearer definition of consumer-designated credit and that it should clarify that it will not challenge a credit union's judgment when designating a consumer or business purpose for credit.

The Bureau is proposing that the 1071 rule not cover products designated by the creditor as consumer purpose products (consumer-designated credit). Proposed comment 104(b)–3 would make clear that the term covered credit transaction does not include consumer-designated credit used for business purposes, because such transactions are not business credit. Proposed comment 104(b)–3 would provide that a transaction qualifies as consumer-designated credit if the financial institution offers or extends the credit primarily for personal, family, or household purposes. For example, an open-end credit account used for both personal and business purposes is not business credit for the purpose of proposed subpart B unless the financial institution designated or intended for the primary purpose of the account to be business-related.

The Bureau understands that some small business owners may use consumer-designated credit in order to finance their small businesses—such as taking out a home equity line of credit or charging business expenses on their personal credit cards. Nonetheless, the Bureau believes it is appropriate to interpret section 1071 as not applying to this type of credit. Most notably, ECOA section 704B(b) directs financial institutions to collect data in the case of an application ''*for credit* for women-owned, minority-owned, or small *business*'' (emphasis added). The statute thus applies only to applications for credit for a business; at the time of an application for consumer-designated credit, however, the application is not for a business. Several policy reasons also support this approach. First, the Bureau is concerned about financial institutions' ability to consistently identify when consumer-designated credit is being used for business purposes. Inconsistent reporting across financial institutions could lead to data quality concerns. Credit sought by consumers for both personal and business purposes could be particularly difficult to separate into reportable and non-reportable portions. The Bureau believes the proposal to define business credit to exclude consumer-designated credit will simplify compliance by obviating the need for financial institutions to identify and distinguish business uses of consumer-purpose credit products. Second, not including consumer-designated credit used for business purposes within the scope of this rulemaking would make it clear that the applications reported will all be seeking credit to use for business purposes, which supports 1071's directive to collect and report data in the case of an application for credit for a *business.* Third, not covering consumer-designated credit used for business purposes would provide certainty to financial institutions that offer only consumer-designated credit that they would not be subject to this proposal's data collection and reporting requirements.

As recommended by the SBREFA Panel, the Bureau seeks comment on this proposed interpretation, including how the Bureau has defined the scope of consumer-designated credit. The Bureau also seeks comment on whether it should permit financial institutions to voluntarily report consumer-designated credit when they have reason to believe the credit might be used for business purposes.

*Credit secured by certain investment properties.* In the SBREFA Outline, the Bureau did not expressly discuss treatment of real estate-secured loans used for investment purposes. Based on questions from SERs about the Bureau's intended approach, however, the SBREFA Panel recommended that the Bureau address in the proposed rule whether it intends to cover real estate-secured investment loans in the 1071 rule.[428] One SER had asked that the Bureau clarify whether loans covering 1–4 family properties used for investment purposes are business loans under section 1071, and several SERs recommended that the Bureau cover real estate investment loans (for both non-owner occupied residential property

[425] SBREFA Outline at 20–21.

[426] SBREFA Panel Report at 44.

[427] *Id.* at 45.

[428] *Id.* at 44–45.

and commercial property) under section 1071. Several other SERs sought to distinguish certain types of real estate investment loans; one SER remarked, for example, that owning a single non-owner occupied residential property as an investment may be more of a ''hobby'' but owning multiple properties could be considered a business.

A number of other stakeholders suggested that the Bureau should exclude at least some real estate investment loans under section 1071. A few stakeholders stated that the Bureau should consider an exemption for loans that are reported under another regulatory framework, such as HMDA and/or CRA because the effort of collecting and reporting information regarding such real estate loans would not be worth the added burden given the availability of alternative data sources. A few stakeholders argued that Congress did not intend to include real estate investment loans within the scope of section 1071. One such stakeholder stated that this intention is evident because many of the proposed loan purpose categories reflect a desire to collect data regarding credit offered to businesses which offer a product or service. One stakeholder seeking exclusion of certain real estate loans explained that most commercial real estate loans are made to borrowers as investments and not for operating their business. A few stakeholders suggested that the Bureau should only treat as reportable loans secured by owner-occupied commercial real estate where the primary source of repayment is the cash flow from the ongoing business operations. One stakeholder noted that because commercial real estate loans made to investors are typically made to business entities with complex ownership structures, their inclusion under 1071 would create additional hurdles for lenders seeking to determine the principal owners.

Based on this feedback as well as its general knowledge regarding both consumer and commercial real estate lending, the Bureau understands that many financial institutions use their consumer mortgage lending channels to process credit applications secured by 1–4 family residential property and used for investment purposes, while applications for credit secured by 5+ unit multifamily properties or rental portfolio loans secured by more than four 1–4 unit residential properties are generally processed through commercial mortgage lending channels. The Bureau also understands that loans made through consumer mortgage lending channels are often made pursuant to the guidelines of Fannie Mae, Freddie Mac, the Federal Housing Administration (FHA), and the Department of Veterans Affairs (VA), and are likely already reported under HMDA.

In light of the feedback received and the Panel's recommendation, the Bureau is proposing that the 1071 rule not cover credit secured by certain investment properties, because such credit may not always be primarily for business or commercial purposes. Specifically, proposed comment 104(b)–4 would explain that a covered credit transaction does not include an extension of credit that is secured by 1–4 individual dwelling units that the applicant or one or more of the applicant's principal owners does not, or will not, occupy. The Bureau is not proposing to exclude credit secured by owner-occupied dwellings; for example, those secured by a dwelling occupied by a business's sole proprietor/principal owner. The Bureau is thus proposing to exclude real estate investment loans only in certain limited circumstances (such as when credit is secured by non-owner occupied 1–4 dwelling units and not 5+ dwelling units). As discussed above in the section-by-section analysis of proposed § 1002.102(j), the Bureau is proposing to define ''dwelling'' to have the same meaning as Regulation C § 1003.2(f). Similarly, proposed comment 104(b)–4, which would address what does and does not constitute an investment property, is modeled on Regulation C's comment 4(a)(6)–4.

The Bureau is proposing a definition of ''covered credit transaction'' that does not cover certain real estate investment loans in the scope of a ''covered credit transaction'' pursuant to its authority under ECOA section 704B(g)(1) to prescribe such rules and issue such guidance as may be necessary to carry out, enforce, and compile data under section 1071. The Bureau believes that its exclusion of credit secured by certain investment properties will better capture lending to true small businesses (as opposed to consumers seeking to diversify their investments) and will also better align with financial institution lending practices. The Bureau understands that it may not always be easy for financial institutions to distinguish between business-purpose real estate investment loans and consumer-purpose real estate investment loans; however, covering all such loans would likely include some percentage of consumer-purpose loans in the 1071 rule, which could be contrary to section 1071's business and community development purpose.

The Bureau seeks comment on its proposed approach for credit secured by certain investment properties, including whether it is appropriate to consider credit not to be business credit when it is secured by 1–4 individual dwelling units that the applicant or one or more of the applicant's principal owners does not, or will not, occupy; and, if not, whether a different number of dwelling units in the property securing the credit would be an appropriate way to make a distinction between business and consumer-designated credit. The Bureau also solicits comment on whether to permit financial institutions to voluntarily report real estate investment loan transactions that are secured by non-owner occupied 1–4 dwelling units.

*Government credit.* The existing definition of business credit in § 1002.2(g) excludes public utilities credit, securities credit, incidental credit, and government credit (that is, extensions of credit made *to* governments or governmental subdivisions, agencies, or instrumentalities—not extensions of credit made *by* governments), as defined in existing § 1002.3(a) through (d), from certain aspects of existing Regulation B.[429] For the purpose of proposed subpart B, the Bureau is proposing complete exclusions for public utilities credit, securities credit, and incidental credit from the definition of a covered credit transaction in proposed § 1002.104(b), as discussed below.

However, the Bureau is not proposing to exclude government credit, as defined in existing § 1002.3(d)(1) to mean ''extensions of credit made to governments or governmental subdivisions, agencies, or instrumentalities.'' The Bureau believes that an express exclusion for extensions of credit made to governments or governmental subdivisions, agencies, or instrumentalities is not necessary because such governmental entities would not constitute small businesses under the proposed rule.[430] The Bureau seeks comment on its approach to government credit.

*Certain purchases of covered credit transactions.* In the SBREFA Outline, the Bureau did not expressly discuss treatment of loan purchases, but the Bureau sought feedback on any products that should or should not be covered by

[429] As explained in existing comment 3–1, under § 1002.3, procedural requirements of Regulation B do not apply to certain types of credit. The comment further states that all classes of transactions remain subject to § 1002.4(a) (the general rule barring discrimination on a prohibited basis) and to any other provision not specifically excepted.

[430] Government entities are not ''organized for profit'' and are thus not a ''business concern'' under proposed § 1002.106(a).

the Bureau's eventual 1071 rule.[431] Several SERs voiced support for generally aligning small business lending reporting requirements for financial institutions with the approach taken for HMDA reporting in the Bureau's Regulation C. One SER stressed that imposing section 1071 requirements for loan buyers, who play an important role in assisting CDFIs but do not make credit decisions, might risk their continued participation. Feedback from other stakeholders was limited, although a few stakeholders suggested that the Bureau should generally exclude purchased loans. The Panel did not provide a specific recommendation on this topic.

The Bureau believes that this feedback may be based in part on the requirements that apply to HMDA, where Regulation C requires financial institutions to report purchases of covered loans under HMDA.[432] This requirement is based on statutory language that contemplates data collection for loan purchases.[433] As discussed in the section-by-section analysis of proposed § 1002.103, ECOA section 704B(b) requires that financial institutions collect, maintain, and report to the Bureau certain information regarding ''any application to a financial institution for credit.'' For covered financial institutions, the definition of ''application'' will trigger data collection and reporting obligations with respect to covered credit transactions. Under proposed subpart B, purchasing a loan does not, in itself, generate an obligation for a covered financial institution to report small business lending data. Rather, a reporting obligation may arise on the basis of making a final credit decision on an application. (See the section-by-section analysis of proposed § 1002.109(a)(3) for additional information.) The Bureau also notes the corollary point that selling a covered loan would not, in itself, obviate an existing obligation of a covered financial institution to report small business lending data for that application, pursuant to proposed comment 107(a)–1.i.

Because under this proposal purchasing a loan does not, in itself, generate an obligation for a covered financial institution to report small business lending data regarding the underlying application, the Bureau is not proposing a specific exclusion for these purchases.

The Bureau seeks comment on its proposal not to expressly exclude the purchase of covered credit transactions in the proposed rule's regulatory text or commentary.

*Certain purchases of covered credit transactions—pooled loans.* In the SBREFA Outline, the Bureau did not expressly discuss treatment of pooled loan purchases, but the Bureau sought feedback on any products that should or should not be covered by the Bureau's eventual 1071 rule.[434] A CDFI SER that occasionally participates in pooled loan purchases recommended that the Bureau ensure that reporting obligations for such pooled loans are clear.

The Panel did not provide a specific recommendation on this topic. The Bureau believes that this feedback may be based in part on the requirements that apply to HMDA, where Regulation C requires financial institutions to report purchases of covered loans under HMDA.[435] This requirement is based on statutory language that contemplates data collection for loan purchases.[436] However, Regulation C exempts from these general reporting requirements ''[t]he purchase of an interest in a pool of closed-end mortgage loans or open-end lines of credit''[437] As discussed in the section-by-section analysis of proposed § 1002.103 above, ECOA section 704B(b) requires that financial institutions collect, maintain, and report to the Bureau certain information regarding ''any application to a financial institution for credit.'' For covered financial institutions, the definition of ''application'' (or, as used in this proposed rule, ''covered application'') will trigger data collection and reporting obligations with respect to covered credit transactions. Under this proposed subpart, the purchase of an interest in a pool of loans does not, in itself, generate an obligation for a covered financial institution to report small business lending data. There is thus no need to propose a similar exclusion in this proposed subpart.

The Bureau believes that requiring covered financial institutions to collect and maintain data related to the purchase of an interest in a pool of covered credit transactions would do little to further the purposes of section 1071. The Bureau generally believes that a pooled loan purchase would arise after a final credit decision on the relevant loans has already been made (*e.g.,* after the loans were originated) and therefore the Bureau believes that the purchaser of an interest in a pool of loans would understand that there would be no section 1071 obligation. Section 1071 would already capture the lending information of the loans in this pool, as the application for each origination in the pool would already be reported (assuming it was originated by a covered financial institution and otherwise satisfies the requirements of proposed subpart B). For clarity, however, the Bureau is stating here that no reporting obligations arise from purchasing an interest in a pool of covered credit transactions, including credit-backed securities or real estate investment conduits. The Bureau believes that this clarification, similar to Regulation C comment 3(c)(4)–1, will assist covered financial institutions in understanding the scope of their obligations.

The Bureau seeks comment on its proposal not to expressly exclude the purchase of an interest in a pool of covered credit transactions in the proposed rule's regulatory text or commentary.

*Certain purchases of covered credit transactions—partial interests in a covered credit transaction.* In the SBREFA Outline, the Bureau did not specifically solicit feedback on a financial institution's obligation to report the purchase of a partial interest in a covered credit transaction (such as through participation loans, where multiple financial institutions fund a single origination); however, the Bureau did receive some feedback on this issue. One SER noted that there was some uncertainty with respect to how the Bureau intended to treat loan participations. This SER urged the Bureau not to discourage smaller credit unions in rural markets, who the SER stated may be likely to take part in loan participations, from helping their communities. The Panel did not provide a specific recommendation on this topic. Several other stakeholders also requested that the Bureau exempt participation loans.

The Bureau believes that this feedback may be based in part on the requirements that apply to HMDA, where Regulation C requires financial institutions to report purchases of

[431] SBREFA Outline at 19–20.

[432] *See* Regulation C § 1003.4(a) (stating that a financial institution ''shall collect data regarding . . . covered loans that it purchases for each calendar year'').

[433] *See* 12 U.S.C. 2803(a)(1) (stating that institutions ''shall compile and make available . . . the number and total dollar amount of mortgage loans which were (A) originated (or for which the institution received completed applications), or (B) purchased by that institution'').

[434] SBREFA Outline at 19–20.

[435] *See* Regulation C § 1003.4(a) (stating that a financial institution ''shall collect data regarding . . . covered loans that it purchases for each calendar year'').

[436] *See* 12 U.S.C. 2803(a)(1) (stating that depository institutions ''shall compile and make available . . . the number and total dollar amount of mortgage loans which were (A) originated (or for which the institution received completed applications), or (B) purchased by that institution'').

[437] 12 CFR 1003.3(c)(4).

covered loans under HMDA.[438] This requirement is based on statutory language that contemplates data collection for loan purchases.[439] However, Regulation C exempts from these general reporting requirements ''[t]he purchase of a partial interest in a closed-end mortgage loan or open-end line of credit'' [440] As discussed in the section-by-section analysis of proposed § 1002.103 above, ECOA section 704B(b) requires that financial institutions collect, maintain, and report to the Bureau certain information regarding ''any application to a financial institution for credit.'' For covered financial institutions, the definition of ''application'' (or, as used in this proposed rule, ''covered application'') will trigger data collection and reporting obligations with respect to covered credit transactions. Under this subpart, a partial purchase of a loan does not, in itself, generate an obligation for a covered financial institution to report small business lending data. There is thus no need to propose a similar exclusion in this subpart.

The Bureau believes that this approach, combined with proposed § 1002.109(a)(3), provides sufficient clarity for financial institutions that choose to take part in loan participations. For example, Financial Institution A receives an application for a covered credit transaction and approves the loan, and then Financial Institution A elects to organize a loan participation agreement where Financial Institutions B and C agree to purchase a partial interest. This is a covered credit transaction for Financial Institution A, but it is not a covered credit transaction for Financial Institutions B and C. The Bureau believes that this approach differs from how loan participations are reported by banks and savings associations under the CRA. That is, under the CRA, if the loan originated by Financial Institution A met the definition of a small business loan, then if any (or all) of the financial institutions were CRA loan reporters the loans may be reported under the CRA.[441]

The Bureau believes that the purposes of section 1071 counsel towards the broad collection of small business lending by financial institutions. The Bureau is further unaware of any reason why data with respect to such lending should not be collected because more than one financial institution holds an interest in a covered product. Conversely, the Bureau does not believe that requiring reporting by *each* financial institution with a partial interest in a covered credit transaction would further section 1071's purposes, and is concerned that having a single loan reported by multiple financial institutions could compromise the quality of the section 1071 dataset. Read in conjunction with proposed § 1002.109(a)(3), however, the Bureau believes that the covered credit transactions at issue here will nonetheless generally be reported by one covered financial institution, the financial institution that sold portions of the loan to other participants.

The Bureau seeks comment on its proposal not to expressly exclude the purchase of a partial interest in a covered credit transaction in the proposed rule's regulatory text or commentary. In particular, the Bureau solicits comment on how this proposed exclusion may differ from reporting obligations under the CRA, and if the Bureau adopted another approach, how overlapping reporters or data might be flagged to avoid double-counting certain information.

*Trade credit.* Under existing Regulation B, trade credit refers to a ''financing arrangement that involves a buyer and a seller—such as a supplier who finances the sale of equipment, supplies, or inventory; it does not apply to an extension of credit by a bank or other financial institution for the financing of such items.'' [442] Thus, trade credit typically involves a transaction in which a seller allows a business to purchase its own goods without requiring immediate payment, and the seller is not otherwise in the financial services business. Businesses offering trade credit generally do so as a means to facilitate the sale of their own goods and not as a stand-alone financing product.

Most of the notification requirements of existing Regulation B do not apply to trade credit transactions.[443] In a typical trade credit transaction, the seller is not otherwise in the financial services business.[444] The Bureau's White Paper estimated that trade credit represents approximately 21 percent of the aggregate dollar volume of various financial products used by small businesses.[445] The Bureau understands that there are tens of thousands of merchants and wholesalers that extend credit to small businesses solely in connection with sale of goods and services by these trade creditors.

In its SBREFA Outline, the Bureau stated that it was considering proposing that trade credit not be a covered product under section 1071.[446] The Bureau stated that trade credit can be offered by entities that are themselves very small businesses and that the Bureau was concerned that these entities, in particular, may incur large costs relative to their size to collect and report 1071 data in an accurate and consistent manner.[447]

The Bureau only received a few comments regarding its proposal under consideration to exclude trade credit. A few stakeholders suggested that trade credit should be covered. One commenter noted that trade credit is used for a significant number of agricultural finance transactions (equipment financing and input financing for row crop farmers) and suggested that the Bureau should monitor this sector of the agricultural finance industry. A trade association stated that the exclusion of trade credit should apply not only to the seller of inventory and businesses facilitating the sale of inventory, but also its affiliates and facilitators because these entities generally provide financing only for the seller's products and not for competing or unrelated products. The trade association cautioned that the collection and publication of data, if applied to such an affiliate, could significantly impact the seller's ability to maintain trade secrets, as these data would provide competitors a comprehensive insight into the seller's distribution and wholesale strategies, and it would also create a substantial risk to the applicants themselves due to privacy concerns.

The Bureau is proposing to not cover trade credit in its 1071 rule. Proposed § 1002.104(b)(1) would define trade credit as a financing arrangement wherein a business acquires goods or services from another business without making immediate payment to the business providing the goods or services. Proposed comment 104(b)(1)–1 would provide that an example of trade credit is one that involves a supplier that finances the sale of equipment,

[438] *See* Regulation B § 1003.4(a) (stating that a financial institution ''shall collect data regarding . . . covered loans that it purchases for each calendar year'').

[439] *See* 12 U.S.C. 2803(a)(1) (stating that depository institutions ''shall compile and make available . . . the number and total dollar amount of mortgage loans which were (A) originated (or for which the institution received completed applications), or (B) purchased by that institution'').

[440] 12 CFR 1003.3(c)(8).

[441] *See, e.g.,* 12 CFR 228.21(f) (stating that when assessing the record of a nonminority-owned and nonwomen-owned bank, the Board considers loan participation as a factor).

[442] Comment 9(a)(3)–2.

[443] *See* § 1002.9(a)(3)(ii).

[444] *See* comment 9(a)(3)–2.

[445] White Paper at 21 fig. 2.

[446] SBREFA Outline at 21.

[447] *See id.*

supplies, or inventory. Proposed comment 104(b)(1)–1 would provide that an extension of business credit by a financial institution other than the supplier for the financing of such items is not trade credit. Proposed comment 104(b)(1)–2 would clarify that the definition of trade credit under existing comment 9(a)(3)–2 applies to relevant provisions under existing Regulation B, and that proposed § 1002.104(b)(1) is not intended to repeal, abrogate, annul, impair, or interfere with any existing interpretations, orders, agreements, ordinances, rules, or regulations adopted or issued pursuant to existing comment 9(a)(3)–2.

The Bureau is proposing a definition of ''covered credit transaction'' that excludes trade credit pursuant to its authority under ECOA section 704B(g)(1) to prescribe such rules and issue such guidance as may be necessary to carry out, enforce, and compile data under section 1071. While trade credit constitutes ''credit'' within the meaning of proposed § 1002.102(k), the Bureau believes that trade credit is categorically different from products like loans, lines of credit, credit cards, and MCAs and that there are several reasons to exclude it from coverage. Trade credit is not a general-use business lending product—that is, trade creditors generally extend credit as a means to facilitate the sale of their own goods, rather than offering it as a stand-alone financial product. The Bureau believes that while trade creditors might meet the definition in section 1071 of a financial institution, they are not financial services providers that manage compliance with regulatory requirements associated with making extensions of credit. The Bureau understands that trade credit can be offered by entities that are themselves very small businesses; the Bureau continues to be concerned that these entities, in particular, may incur large costs relative to their size to collect and report 1071 data in an accurate and consistent manner.[448] Taken together, the Bureau is concerned that requiring trade credit to be reported under proposed subpart B may lead to significant data quality issues. The Bureau is also concerned that the fixed costs of coming into compliance with its 1071 rule could lead these businesses to reduce or cease offering trade credit to their small business customers, which would run contrary to the community development purpose of section 1071.

The Bureau notes that its proposed definition of trade credit in § 1002.104(b)(1) is focused on the business providing the goods or services being financed. It thus does not extend to affiliates and facilitators of trade creditors that provide financing, even if only for the trade creditor's products and not for competing or unrelated products. Provided that they otherwise meet the definition of a covered financial institution in proposed § 1002.105(b), such affiliates and facilitators must collect and report data under the 1071 rule. The Bureau believes that, unlike trade creditors themselves, such affiliates and facilitators offer stand-alone credit products in the same way as other financial institutions. As such, the Bureau does not have the same concerns about data quality or market exit by affiliates and facilitators that it does about trade creditors themselves.

The Bureau seeks comment on its proposal to exclude trade credit from the 1071 rule and on its proposed definition of trade credit.

*Public utilities credit.* As noted above, the existing definition of business credit in § 1002.2(g) excludes public utilities credit, securities credit, incidental credit, and government credit, as defined in existing § 1002.3(a) through (d), from certain procedural requirements of existing Regulation B. For the purpose of proposed subpart B, the Bureau is proposing complete exclusions for public utilities credit from the definition of a covered credit transaction in proposed § 1002.104(b).

In the SBREFA Outline, the Bureau did not expressly discuss treatment of public utilities credit transactions. However, the Bureau sought feedback on any products that should or should not be covered by the Bureau's eventual 1071 rule, and did not receive any feedback specific to public utilities credit.

Proposed § 1002.104(b)(2) would exclude public utilities credit, as defined in existing § 1002.3(a)(1). Existing § 1002.3(a)(1) states that the term public utilities credit refers to extensions of credit that involve public utility services provided through pipe, wire, or other connected facilities, or radio or similar transmission (including extensions of such facilities), if the charges for service, delayed payment, and any discount for prompt payment are filed with or regulated by a government unit. Several existing Regulation B requirements do not apply to public utilities credit transactions.[449] Existing comment 3(a)–1 explains that the definition applies only to credit for the purchase of a utility service, such as electricity, gas, or telephone service. Credit provided or offered by a public utility for some other purpose—such as for financing the purchase of a gas dryer, telephone equipment, or other durable goods, or for insultation or other home improvements—would not be excepted under proposed § 1002.104(b)(2) but may be excepted if it constitutes trade credit under proposed § 1002.104(b)(1), or in the case of financing for certain home improvements, for example, if it does not constitute an extension of business credit under proposed § 1002.104(a). Existing comment 3(a)–2 states in part that a utility company is a creditor when it supplies utility service and bills the user after the service has been provided.

The Bureau is proposing a definition of ''covered credit transaction'' that excludes public utilities credit pursuant to its authority under ECOA section 704B(g)(1) to prescribe such rules and issue such guidance as may be necessary to carry out, enforce, and compile data under section 1071. The Bureau believes that excluding public utilities credit from the 1071 rule is reasonable for the same reasons as the Board enumerated when it adopted exemptions from certain procedural requirements under subpart A. Specifically, the Bureau is concerned that covering public utilities credit under 1071 could require ''substantial changes in the forms and procedures of public utilities companies. Costs associated with such changes would, in all likelihood, be passed along to [small business owners].''[450] The Bureau notes that many of the policies and procedures of public utilities companies are separately regulated at the State and Municipal levels by public service commissions, and at the Federal level by the Federal Energy Regulatory Commission. The Bureau also believes that public utilities credit is akin to trade credit and thus is proposing to exclude it from coverage under subpart B for the same reasons.

The Bureau seeks comment on its proposal to exclude public utilities credit.

*Securities credit.* As noted above, the existing definition of business credit in § 1002.2(g) excludes public utilities credit, securities credit, incidental credit, and government credit, as defined in existing § 1002.3(a) through

[448] *See* Leora Klapper *et al.,* The Review of Financial Studies, *Trade Credit Contracts,* at 838–67 (vol. 25, issue 3, 2012), *https://academic.oup.com/rfs/article/25/3/838/1616515*, and Justin Murfin & Ken Njoroge, The Review of Financial Studies, *The Implicit Costs of Trade Credit Borrowing by Large Firms,* at 112–45 (vol. 28, issue 1, 2015), *https://academic.oup.com/rfs/article/28/1/112/1681329*.

[449] *See* § 1002.3(a).

[450] 40 FR 49298, 49305 (Oct. 22, 1975).

(d), from certain procedural requirements of existing Regulation B. For the purpose of proposed subpart B, the Bureau is proposing complete exclusions for securities credit from the definition of a covered credit transaction in proposed § 1002.104(b).

In the SBREFA Outline, the Bureau did not expressly discuss treatment of securities credit transactions, but the Bureau sought feedback on any products that should or should not be covered by the Bureau's eventual 1071 rule. The Bureau did not receive any feedback specific to securities credit.

Proposed § 1002.104(b)(3) would exclude securities credit, as defined in existing § 1002.3(b)(1). Existing § 1002.3(b)(1) states that the term securities credit refers to extensions of credit subject to regulation under section 7 of the Securities Exchange Act of 1934 or extensions of credit by a broker or dealer subject to regulation as a broker or dealer under the Securities Exchange Act of 1934. Several existing Regulation B requirements do not apply to securities credit transactions.[451]

The Bureau is proposing a definition of ''covered credit transaction'' that excludes securities credit pursuant to its authority under ECOA section 704B(g)(1) to prescribe such rules and issue such guidance as may be necessary to carry out, enforce, and compile data under section 1071. The Bureau is proposing to exclude securities credit to foster consistency with existing Regulation B.

The Bureau seeks comment on its proposal to exclude securities credit.

*Incidental credit.* As noted above, the existing definition of business credit in § 1002.2(g) excludes public utilities credit, securities credit, incidental credit, and government credit, as defined in existing § 1002.3(a) through (d), from certain procedural requirements of existing Regulation B. For the purpose of proposed subpart B, the Bureau is proposing complete exclusions for incidental credit from the definition of a covered credit transaction in proposed § 1002.104(b).

In the SBREFA Outline, the Bureau did not expressly discuss treatment of incidental credit transactions, but the Bureau sought feedback on any products that should or should not be covered by the Bureau's eventual 1071 rule. The Bureau did not receive any feedback specific to incidental credit.

Proposed § 1002.104(b)(4) would exclude incidental credit, as defined in existing § 1002.3(c)(1), but without regard to whether the credit is consumer credit, as defined in existing § 1002.2(h). Existing § 1002.3(c)(1) states that incidental credit refers to extensions of consumer credit other than the types described in § 1002(a) and (b): (i) That are not made pursuant to the terms of a credit card account; (ii) that are not subject to a finance charge (as defined in Regulation Z § 1026.4); and (iii) that are not payable by agreement in more than four installments. A number of existing Regulation B requirements do not apply to ''incidental credit'' (referring to extensions of consumer credit).[452] Existing comment 3(c)–1 explains that if a service provider (such as a hospital, doctor, lawyer, or merchant) allows the client or customer to defer the payment of a bill, this deferral of debt is credit for purposes of the regulation, even though there is no finance charge and no agreement for payment in installments. Because of the exceptions provided by existing § 1002.3, however, these particular credit extensions are excepted from compliance with certain procedural requirements as specified in § 1002.3(c).

The Bureau is proposing a definition of ''covered credit transaction'' that excludes incidental credit pursuant to its authority under ECOA section 704B(g)(1) to prescribe such rules and issue such guidance as may be necessary to carry out, enforce, and compile data under section 1071. The Bureau believes that the Board's reasoning with respect to incidental credit's limited exception under existing Regulation B is equally applicable and relevant here. The Board sought to minimize burdens on businesses that ''permit their customers to defer payment of debt as a convenience and are not in the business of extending credit.'' [453] The Board cited the example of doctors and dentists that permit their patients to defer payment of fees and who are extending credit as incidental to their principal activity of health care.[454] The Board also noted that ''[s]mall neighborhood businesses such as drugstores and grocery stores frequently permit their customers to postpone payment on an informal basis not associated with a formal credit plan.'' [455] The Bureau believes that incidental credit, as described above, is akin to trade credit and thus is proposing to exclude it from coverage under subpart B for the same reasons.

The Bureau seeks comment on its proposal to exclude incidental credit.

Section 1002.105 Covered Financial Institutions and Exempt Institutions

ECOA section 704B(h)(1) defines the term ''financial institution'' as ''any partnership, company, corporation, association (incorporated or unincorporated), trust, estate, cooperative organization, or other entity that engages in any financial activity.'' The Bureau is proposing to define a financial institution in § 1002.105(a) consistent with that statutory language. The Bureau is proposing to define a covered financial institution in § 1002.105(b) as a financial institution that originated at least 25 covered credit transactions from small businesses in each of the two preceding calendar years. Only those financial institutions that meet this loan-volume threshold in the definition of a covered financial institution would be required to collect and report small business lending data pursuant to proposed subpart B.

The Bureau's proposed definitions reflect the broad nature of the data collection specified in section 1071, while recognizing the risks that financial institutions with the lowest volume of small business lending might reduce or cease their small business lending activity because of the fixed costs of coming into compliance with this rule.

The Bureau is proposing § 1002.105 to implement ECOA section 704B(h)(1) and pursuant to its authority under 704B(g)(1) to prescribe such rules and issue such guidance as may be necessary to carry out, enforce, and compile data pursuant to section 1071. The Bureau is also proposing § 1002.105(b) pursuant to its authority under 704B(g)(2) to conditionally or unconditionally exempt any financial institution or class of financial institutions from the statute's requirements, as the Bureau deems necessary or appropriate to carry out the purposes of section 1071. The Bureau is proposing these provisions and proposing to use its exemption authority under 704B(g)(2) for the reasons set forth below.

105(a) Financial Institution

Background

ECOA section 704B(h)(1) defines the term ''financial institution'' as ''any partnership, company, corporation, association (incorporated or unincorporated), trust, estate, cooperative organization, or other entity that engages in any financial activity.''

[451] *See* § 1002.3(b).

[452] *See* § 1002.3(c).

[453] 40 FR 49298, 49304 (Oct. 22, 1975).

[454] *Id.*

[455] *Id.*

SBREFA Proposals Under Consideration and Feedback Received

At SBREFA, the Bureau stated it was considering proposing a general definition of ''financial institution'' consistent with the section 1071 definition.[456] The Bureau noted that Regulation B, which implements ECOA, has not otherwise defined this term.

SERs generally did not express concern regarding the general definition of a ''financial institution'' under consideration, although one SER expressed concern at the broad reach of what might be considered a financial activity.[457] The SBREFA Panel did not provide any recommendations on the definition of a financial institution. Feedback on the definition of ''financial institution'' from other stakeholders was likewise nearly universally positive, with most opining that a definition that encompasses all small business lenders would be appropriate.

Proposed Rule

Proposed § 1002.105(a) would define a financial institution as any partnership, company, corporation, association (incorporated or unincorporated), trust, estate, cooperative organization, or other entity that engages in any financial activity. This proposed definition restates the statute and is the same definition that the Bureau stated it was considering proposing in the SBREFA Outline.[458] The Bureau believes that this definition reflects the broad nature of small business lending data collection specified in section 1071. Under such a definition, the rule's data collection and reporting requirements would apply to a variety of entities that engage in small business lending, including depository institutions (*i.e.,* banks, savings associations, and credit unions),[459] online lenders, platform lenders, CDFIs, lenders involved in equipment and vehicle financing (captive financing companies and independent financing companies), commercial finance companies, governmental lending entities, and nonprofit, nondepository lenders.

As noted above, one SER expressed concern at the broad reach of this definition. But the broad scope of what may be considered a ''financial activity'' in the proposed definition of financial institution is not the principal determinative factor as to whether small business lending data collection and reporting is required; the proposed definition of a covered financial institution, the proposed definition of a covered application, and the proposed definition of a covered credit transaction, among others, all would impose limits on what entities could be subject to this proposed rule's data collection and reporting requirements.

Proposed comment 105(a)–1 would provide a non-exhaustive list of examples of entities that may fit within the definition of a financial institution. This proposed comment would make clear that nonprofit and governmental entities, governmental subdivisions, or governmental agencies, among others, who conduct financial activity fit within the definition of a financial institution. The definition of the term ''financial institution'' in ECOA section 704B(h)(1) includes the phrase ''or other entity.'' That term readily encompasses governments and government entities. Even if the term were ambiguous, the Bureau believes—based on its expertise and experience—that interpreting it to encompass governments and government entities would promote the purposes of section 1071. For example, the Bureau believes that it will be helpful to identify the business and community development needs of women-owned, minority-owned, and small businesses by collecting lending data from both a county-run assistance program for establishing new businesses and financial institutions that operate nationwide, like online lenders. The Bureau also believes that the terms ''companies'' or ''corporations'' under the definition of ''person,'' on their face, cover all companies and corporations, including government-owned or -affiliated companies and corporations. And even if those terms were ambiguous, the Bureau believes—based on its expertise and experience—that interpreting them to cover government-owned or -companies and corporations would promote the purposes of section 1071. The Bureau emphasizes that the list of examples of entities in proposed comment 105(a)–1 is not exhaustive and that other entities not specifically described would nonetheless fit within the definition of a financial institution under proposed § 1002.105(a). For example, the Bureau believes that an organization offering insurance premium financing, where the organization provides short-term loans to businesses to pay for property and casualty insurance, is included within the definition of proposed § 1002.105(a), even though this specific business model is not described in proposed comment 105(a)–1.

Proposed comment 105(a)–2 would refer to proposed § 1002.101(a) to reiterate the statutory exclusion for motor vehicle dealers.

The Bureau seeks comment on this proposed definition of a financial institution, and generally requests comment on whether additional clarification is needed.

105(b) Covered Financial Institution

Background

The Bureau has received requests to adopt exemptions from section 1071 collection and reporting requirements for financial institutions that do not frequently engage in small business lending. Reasons cited have included encouraging market entry, ensuring data quality, alleged lack of materiality of data from smaller lenders that rarely make small business loans, and lack of capacity by the lenders sufficient to justify small business lending as a line of business in light of the cost of complying with an eventual 1071 rule.

SBREFA Proposals Under Consideration and Feedback Received

In the SBREFA Outline, the Bureau stated that it was considering, in light of section 1071's statutory purposes, proposing to exempt financial institutions from any collection and reporting requirements based on either or both a size-based and/or activity-based threshold. In the SBREFA Outline, the Bureau set forth several alternative thresholds under consideration for such an exemption.[460]

There was a diversity of perspectives with respect to the Bureau's approaches under consideration regarding potential exemptions.[461] While some SERs stressed the need for expansive lender coverage to fulfill section 1071's purposes, others suggested that such purposes could be fulfilled by the Bureau collecting and reporting data from only the largest lenders. SERs also offered varying opinions regarding the exemption metrics and thresholds under

[456] SBREFA Outline at 10.

[457] The SER feedback discussed in this section-by-section analysis can be found in the SBREFA Panel Report at 18–20.

[458] SBREFA Outline at 10.

[459] For purposes of this notice of proposed rulemaking, the Bureau is using the term depository institution to mean any bank or savings association defined by the Federal Deposit Insurance Act, 12 U.S.C. 1813(c)(1), or credit union defined pursuant to the Federal Credit Union Act, as implemented by 12 CFR 700.2. The Bureau notes that the Dodd-Frank Act defines a depository institution to mean any bank or savings association defined by the Federal Deposit Insurance Act; there, that term does not encompass credit unions. 12 U.S.C. 5301(18)(A), 1813(c)(1). To facilitate analysis and discussion, the Bureau is referring to banks and savings associations together with credit unions as depository institutions throughout this notice, unless otherwise specified.

[460] SBREFA Outline at 11–13.

[461] The SER feedback discussed in this section-by-section analysis can be found in the SBREFA Panel Report at 18–20.

consideration, with some SERs favoring activity-based exemptions and others preferring an asset-based approach. SERs uniformly supported clear, predictable collection and reporting exemption thresholds.

The SBREFA Panel recommended that the Bureau continue to explore whether either or both a size-based or activity-based test might be appropriate to determine whether a financial institution must collect and report 1071 data or should be exempt, given section 1071's statutory purposes.[462] The SBREFA Panel also recommended that the Bureau continue to explore whether the fixed costs of coming into compliance with an eventual 1071 rule might cause certain financial institutions to reduce or cease lending to small businesses, as it considers the possible exemptions for financial institutions based on size and/or activity, along with any alternative approaches.[463]

Feedback from other stakeholders generally was in support of exempting certain financial institutions from 1071 collection and reporting obligations. Most feedback in support of pursuing exemptions focused on the potential burden of a new regulatory regime, with some stakeholders cautioning that collection and reporting obligations could lead to an increase in the cost of credit. A few stakeholders connected these potential costs with section 1071's purpose to identify community development needs and opportunities (chiefly arguing that costs might lead to higher costs of lending or lower lending volume), or otherwise expressed a general belief that some exemptions were consistent with statutory purposes. Several stakeholders, mostly community groups, urged caution with respect to the extent of any such exemptions, arguing that significant data limitations would run contrary to the general purposes of section 1071.

*Activity-based exemption.* In the SBREFA Outline, the Bureau stated that it was considering whether only financial institutions that engage in a certain amount of small business lending activity should be required to collect and report 1071 data.[464] The Bureau explained that in light of 1071's potentially broad application to financial institutions, an activity-based test to determine reporting responsibility might be appropriate. In particular, the Bureau expressed concern that financial institutions with the lowest volume of small business lending might reduce or cease their small business lending activity because of the fixed costs of coming into compliance with an eventual 1071 rule. The Bureau stated that this result could be contrary to the community development purpose of section 1071.

The Bureau specifically mentioned three possible activity-based threshold levels, each defined by a financial institution's annual number of small business loans originated or the financial institution's annual total dollar value of small business loans originated. (That is, if either measurement is exceeded, then the financial institution must collect and report 1071 data.) Those three possible activity-based threshold levels were: Originations of at least 25 loans or $2.5 million (Option 1 Exemption Threshold); originations of at least 50 loans or $5 million (Option 2 Exemption Threshold); and originations of at least 100 loans or $10 million (Option 3 Exemption Threshold). These possible activity-based thresholds could be based on the financial institution's lending as of the end of the last calendar year, or the end of each of the last two calendar years. An activity-based exemption could apply to depository and nondepository institutions alike.

Some SERs advocated for an activity-based exemption. Several of these SERs preferred an annual 25-loan threshold (with at least one expressing support specifically for the Option 1 Exemption Threshold). One SER preferred the Option 2 Exemption Threshold, while another preferred the Bureau's Option 3 Exemption Threshold. Another SER recommended setting a threshold of more than 100 small business applications (rather than originations) for two consecutive years. These SERs emphasized a general need for thorough data reporting from a wide variety of lenders, and cautioned that in many smaller and rural markets, larger exemptions might result in little or no data collection given that many lenders in those markets make very few small business loans annually.

One SER suggested setting an activity-based threshold based on loan portfolio size rather than annual originations. Another SER suggested that the Bureau consider exempting certain financial institutions using a location test similar or identical to what is used for HMDA, which does not apply to institutions that do not have a home or branch office in a Metropolitan Statistical Area.

There was no uniformity in the feedback from other stakeholders with respect to an activity-based exemption and its potential level. Many commenters, including lenders, trade associations, and community groups, expressed support for the Option 1 Exemption Threshold, although most explicitly supported only the 25-loan threshold. On the other hand, a few comments advocated for versions of the Option 3 Exemption Threshold and many comments urged the Bureau to adopt a threshold higher than the Option 3 Exemption Threshold. Commenters who advocated for higher thresholds consisted of lenders and trade associations.

*Size-based exemption.* In the SBREFA Outline, the Bureau stated that it was concerned that the smallest financial institutions might reduce or cease their small business lending activity because of the fixed costs of coming into compliance with an eventual 1071 rule, which could be contrary to the community development purpose of section 1071.[465] Specifically, the Bureau considered whether depository institutions with assets under a given threshold should be exempt from collecting and reporting small business lending data.

The Bureau stated that it was considering proposing to exempt depository institutions with assets under a given threshold from section 1071's data collection and reporting requirements. The Bureau postulated that this size-based approach could provide a straightforward exemption for very small depository institutions and avoid the need for those entities to measure or monitor their small business lending activity in order to determine whether they would be exempt from the Bureau's 1071 rule. In particular, the Bureau considered possible asset-based exemption threshold levels of $100 million (Option A Exemption Level) and $200 million (Option B Exemption Level). For purposes of this exemption, the Bureau considered proposing that a depository institution measure assets as of the end of the last calendar year, or the end of both of the last two calendar years. The Bureau asked SERs whether there were alternative approaches to a size-based exemption that the Bureau should consider.

SERs did not suggest size-based exemptions other than an asset-based metric that would apply to depository institutions. A few SERs advocated that the Bureau should consider initially exempting lenders other than ''large'' financial institutions (which, one SER suggested, might be defined for depository institutions as those having more than $1 billion in assets). These SERs stated that this approach would capture the vast majority of small business loans while avoiding imposing

[462] *Id.* at 43.

[463] *Id.*

[464] SBREFA Outline at 12–13.

[465] *Id.* at 11–12.

undue regulatory burden on smaller lenders, who might be less capable of absorbing such costs. They suggested that the Bureau might later consider whether to expand section 1071 data collection and reporting requirements to smaller financial institutions after first analyzing the available data. Several SERs cautioned that some financial institutions, particularly small nondepository lenders, might cease lending to small businesses if the eventual 1071 rule's one-time costs are too high.

One SER stated that a $200 million asset-based exemption would be helpful to small depository lenders, and others suggested that a threshold of $600 million was appropriate. Another SER countered, however, that they were unaware of data to support an asset-based exemption larger than $100 million. Some SERs expressly opposed an asset-based exemption; one SER cautioned that an exemption based solely on asset size would be inadvisable because many lenders do not hold their loans on their balance sheet. Another SER stated that adopting an asset-based exemption would risk excluding the collection of nearly all small business lending data in certain regions.

Input from other stakeholders was split. Many stakeholders supported a size-based exemption (typically an asset-based exemption), contending that small depository institutions faced substantial compliance costs and presented a lower likelihood of fair lending violations. Small depository institutions were also particularly concerned about data security issues. However, a number of other stakeholders counseled against a size-based exemption, arguing that exemptions should be based instead on lending activity, and that size-based exemptions risked under-reporting in important markets. In addition, some stakeholders noted that because there was no ready equivalent size-based measurement for nondepository institutions, including an asset-based exemption in the 1071 rule would put other small financial institutions at a cost disadvantage.

*Combined exemption.* The Bureau stated that it was exploring whether to combine the size- and activity-based approaches.[466] Under a combined approach, a financial institution would be required to collect and report 1071 data if it exceeds either: (1) A given annual number of small business loans originated; or (2) annual total small business lending, measured in dollars. However, depository institutions with assets under a given asset threshold would be exempt from reporting, regardless of the number or dollar value of small business loans they originated during the relevant time period.

At least one SER supported a combined size-based and activity-based exemption. Some SERs also suggested other possible bases for setting exemption thresholds. For example, several SERs suggested that the Bureau focus on the number of small business loans that would be covered or excluded, rather than the number of financial institutions, in setting an exemption threshold. One SER suggested setting a threshold based on loan portfolio size rather than annual originations. As discussed above, another SER suggested that the Bureau consider exempting certain financial institutions using a location test similar or identical to what is used for HMDA, which does not apply to institutions that do not have a home or branch office in a Metropolitan Statistical Area.

*Alternative exemptions.* The Bureau did not express that it was considering other collection and reporting exemptions. However, the Bureau did request feedback on alternative approaches. In particular, the Bureau asked whether there were certain types of financial institutions, such as governmental lending entities or nonprofit nondepository lenders, that the Bureau should consider not including within 1071's data collection and reporting requirements.

One credit union SER requested that the Bureau exempt all credit unions from section 1071 data collection and reporting requirements, asserting that credit unions had not displayed what they characterized as a ''pattern of unfair lending.'' In contrast, another SER cautioned against providing exemptions for particular types of financial institutions, noting the risk of missing important lending data. A few SERs, particularly CDFIs, strongly preferred that all lenders, including nonprofit and government lenders, be subject to section 1071 data collection and reporting requirements. One SER asserted that disparities exist in many forms of small business lending, including the SBA's 7(a) Loan Program, State lending programs, and funds distributed through the recent Coronavirus Aid, Relief, and Economic Security Act (CARES Act).[467] Another SER stated that in certain parts of the country, such as the Midwest, Farm Credit System loans are available to small businesses, and thus Farm Credit institutions are in competition with other lenders and should be covered entities. One SER stated that the Bureau should consider exempting nondepository, nonprofit Native CDFIs because section 1071 data collection and reporting requirements might impose significant compliance costs and privacy concerns.[468] The SBREFA Panel recommendations did not directly address this topic, although the Panel did recommend that the Bureau continue to consider alternative approaches to exemptions.[469]

Feedback from other stakeholders included a variety of suggestions for other types of financial institutions that the Bureau should consider exempting. These suggestions were made by financial institutions (or their trade associations) to describe either themselves or portions of their membership. The Bureau received this feedback pertaining to CDFIs, credit unions, minority depository institutions, financial institutions in rural areas or low- and moderate-income areas, financial institutions that would themselves be small businesses under the rule, and motor vehicle dealers. Conversely, some stakeholders encouraged the Bureau not to provide any such categorical exemptions. One stakeholder also urged the Bureau not to exempt government or nonprofit lenders, arguing that they were an important element of achieving broad coverage in 1071 data.

Proposed Rule—Activity-Based Exemption

Proposed § 1002.105(b) would define a covered financial institution as a financial institution that originated at least 25 covered credit transactions for small businesses in each of the two preceding calendar years. This proposed definition adopts the portion of the Option 1 Exemption Threshold based on number of originations discussed at SBREFA, using the two consecutive year approach that was also described at SBREFA. The Bureau believes this definition will facilitate compliance by describing which financial institutions are required to collect and report small business data. The Bureau is also proposing commentary to accompany proposed § 1002.105(b). The Bureau's

[466] *Id.* at 13.

[467] Public Law 116–136, 134 Stat. 281 (2020).

[468] Native CDFIs are organizations certified as community development financial institutions that primarily serve a Native Community and are therefore eligible for Financial Assistance and Technical Assistance awards provided by the Native American CDFI Assistance Program. CDFI Fund, *Fostering Economic Self-Determination for Your Native Community, https://www.cdfifund.gov/sites/cdfi/files/documents/cdfi7205_fs_ni_updatedfeb20.pdf* (last visited Aug. 12, 2021).

[469] SBREFA Panel Report at 43.

rationale for proposing this exemption, and for not proposing any others, is discussed in detail below.

In general, the Bureau believes that fulfilling the purposes of section 1071 necessitates collecting small business lending data from all sizes and types of financial institutions (other than those with a low volume of lending activity), particularly given the variety of entities identified in ECOA section 704B(h)(1). The Bureau is proposing to exempt certain financial institutions from its small business lending data collection rule because it remains concerned that financial institutions with the lowest volume of small business lending might reduce or cease their small business lending activity due to the fixed costs of coming into compliance with the 1071 rule. A reduction in access to credit would run contrary to the community development purpose of section 1071. Section 1071 describes its community development purpose as ''enabl[ing] communities, governmental entities, and creditors to identify business and community development needs and opportunities of women-owned, minority-owned, and small businesses.'' [470] In the Bureau's view, such business and community development opportunities cannot be appropriately identified if the 1071 rule unduly eliminates those opportunities by reducing access to credit, which, as explained below, supports the Bureau's use of its exemption authority under 704B(g)(2) here. Feedback from SBREFA showed that a broad array of financial institutions, trade associations, community groups, and others share the Bureau's concern about the risk of reducing access to small business credit, particularly with respect to financial institutions that infrequently lend to small businesses.

The Bureau is proposing § 1002.105(b) pursuant to its authority under ECOA section 704B(g)(1) to prescribe such rules and issue such guidance as may be necessary to carry out, enforce, and compile data pursuant to section 1071 and its authority under 704B(g)(2) to adopt exceptions to any requirement of section 1071 and, conditionally or unconditionally, exempt any financial institution or class of financial institutions from the requirements of section 1071, as the Bureau deems necessary or appropriate to carry out the purposes of section 1071.

The Bureau believes that an activity-based threshold would provide a simple basis for financial institutions that infrequently lend to small businesses to determine whether they have conducted sufficient lending activity as to be required to collect and report data under proposed subpart B. With respect to setting an activity-based threshold, feedback favored using only originations. SERs uniformly supported clear, predictable collection and reporting exemption thresholds. With respect to feedback from other stakeholders, nearly all of the comments that expressed support for the Option 1 Exemption Threshold provided support only for the 25-loan metric, and not the total lending metric (and several comments explicitly urged the Bureau not to adopt the $2.5 million lending threshold). The Bureau believes that furnishing a dual activity-based threshold, under which infrequent lenders must ascertain both measurements to determine whether reporting may be required, would cut against the goal of simplifying the rule as lenders would then have to track two metrics, not one. The Bureau believes that a dual threshold would create more regulatory complexity as, among other things, the resulting rule would have to address issues such as how lines of credit and credit cards are meant to be counted towards the dollar volume threshold. (For example, should the rule use the maximum amount that could be extended or something else, like an average of the amount actually outstanding? If the former, how should changes in the limit be treated?) In contrast, tracking total annual small business originations does not entail such complexity.

In particular, the Bureau believes that a primary advantage of an activity-based threshold—ease of compliance—would be undermined if the Bureau were to implement a complex, dual threshold eligibility test. The Bureau wishes to ensure that infrequent lenders are not incurring significant undue compliance costs, particularly while not reporting data. In general, tracking two thresholds is more complex than tracking one. And of these two thresholds, the Bureau believes that tracking total originations is simpler than tracking total lending. The Bureau believes it is also more likely that financial institutions are already tracking total originations. The Bureau believes that proposing an activity-based threshold that employs data already generally collected by financial institutions could mitigate the risk that section 1071, when implemented, would result in reduced access to credit.

The Bureau is thus proposing to set the loan-volume threshold at 25 covered credit transactions from small businesses in each of the past two years. This proposal is based, in part, on feedback received at SBREFA. As mentioned above, several SERs recommended an annual 25-loan threshold and many comments, including those from lenders, trade associations, and community groups, expressed support for the Option 1 Exemption Threshold, with most explicitly supporting just the 25-loan threshold and not total lending.

The Bureau continues to consider whether this loan-volume threshold should be set at a different level, such as 50 or 100 originations, as described in the SBREFA Outline.[471] The Bureau notes that there was also substantial support for a much higher loan-volume threshold than 25 originations. In addition to the SER feedback discussed above, several stakeholders advocated for 100 loans and many others advocated for an even higher threshold. However, at least to this point, the Bureau is not convinced, based on the feedback from SERs and other stakeholders, that higher thresholds would be more necessary or appropriate to carry out the purposes of section 1071. Rather, such advocacy focused either on concerns that lower thresholds would not exempt a particular financial institution or type of financial institution, such as community banks, or that higher thresholds would not substantially diminish overall data collection.

Supporters of the 25-loan threshold and supporters of the 100-loan threshold each argued that such a threshold would be similar to that used in HMDA. The Bureau's 2015 HMDA Rule set the closed-end loan threshold

[470] ECOA section 704B(a).

[471] SBREFA Outline at 12.

at 25 originated loans for each of the two preceding calendar years.[472] However, in 2020, the Bureau increased the threshold to 100 closed-end loans, effective the same year.[473] The Bureau set the HMDA threshold pursuant to its authority to provide adjustments or exceptions that it judges as necessary and proper to effectuate the purposes of HMDA or to facilitate compliance with HMDA. In the present case, with respect to institutional coverage thresholds, the Bureau does not believe a direct comparison with HMDA is instructive because of differences in the relevant statutory authorities and between home mortgages and small business loans.

The Bureau also considered how its proposed threshold of 25 covered credit transactions for small businesses (and the other thresholds under consideration at SBREFA) might affect overall collection and reporting of 1071 data from banks and credit unions, based on data as of 2019. Table 1 below provides the Bureau's estimated share of depository institutions, estimated share of small business loans from those institutions (measured in total number of loans), and estimated share of small business credit from those institutions (measured in dollars) that would be covered by a loan-volume threshold of 25, 50, or 100 small business loans. The Bureau estimates that a depository institution is covered for a particular loan-volume threshold as of 2019 if the estimated number of originations for that institution exceeded the threshold in both 2017 and 2018. Given the limitations of the source data, the Bureau cautions that these estimates are not intended to provide a complete sense of the possible consequences of adopting each particular threshold. Nonetheless, the Bureau is providing estimates based on these data because it is the best information currently available to the Bureau. Moreover, the Bureau emphasizes that these estimates apply only to depository institutions. This information is based on FFIEC and Credit Union Call Reports, as well as Community Reinvestment Act submissions.[474] Under these data collections, banks report small loans made to businesses and farms (regardless of the borrower's size). Credit unions report commercial loans over $50,000 made to members (also, regardless of the borrower's size). The Bureau is unable to determine the degree to which these data provide an adequate proxy for the applications from small businesses that would be subject to 1071 reporting. The methodologies and assumptions used to produce these estimates are further documented in part VII.D below and in more detail in its *Supplemental estimation methodology for institutional coverage and market-level cost estimates in the small business lending data collection notice of proposed rulemaking* released concurrently with this proposal.[475]

**Table 1: Estimated depository institution coverage by loan volume (as of 2019)**

| | 25 Loans | 50 Loans | 100 Loans |
|---|---|---|---|
| Institutions Subject to Reporting | 38% – 40% of all depository institutions[476] | 27% – 30% of all depository institutions | 17% – 19% of all depository institutions |
| Banks and Savings Associations (SAs) Subject to Reporting | 70% – 73% of all banks and SAs[477] | 52% – 56% of all banks and SAs | 33% – 36% of all banks and SAs |
| Credit Unions Subject to Reporting | 7% of all credit unions[478] | 4% of all credit unions | 2% of all credit unions |
| Share of Total Small Business Loans by Depository Institutions (Number of Loans Originated) Captured | 98.3% – 98.6% | 96.7% – 97.3% | 94.2% – 95.1% |
| Share of Total Small Business Credit by Depository Institutions (Dollar Value of Loans Originated) Captured | 97.9% – 98.6% | 95.3% – 96.3% | 90.0% – 92.0% |

[472] *See* 80 FR 66127 (Oct. 28, 2015). The Bureau also provided a higher threshold of 100 for open-end lines of credit. *Id.*

[473] *See* 85 FR 28364 (May 12, 2020).

[474] On the bank Call Report and in the Community Reinvestment Act data, for small bank and small farm loans, banks report on business loans with original amounts of $1 million or less and farm loans with original amounts of $500,000 or less. For lines of credit or loan commitments, banks report the size of the line of credit or commitment when it was most recently approved. Banks include loans guaranteed by the SBA and other government entities in their small loans to businesses. Banks do not report loans to nonprofit organizations in this category. Thus, these data collections would include loans made to purchase, for example, individual vehicles and pieces of equipment for the nation's largest businesses.

[475] This document is available at *https://www.consumerfinance.gov/data-research/research-reports/supplemental-estimation-methodologies-small-business-lending-data-collection-nprm/*.

Table 1 above shows that as the loan-volume threshold rises, the estimated share of depository institutions subject to section 1071 decreases substantially. Likewise, the estimated share of small business loans and small business credit captured by the rule would also decrease, although those decreases are less pronounced. The Bureau has no information for nondepository institutions such that the Bureau could provide similar estimates for comment. The Bureau requests in response to this proposal such information and data that might bear on any activity-based exemption for nondepository institutions.[476] [477] [478]

The Bureau notes that the above estimates represent small business lending data prior to the COVID–19 pandemic and ensuing policy responses. The Bureau is keenly aware that many financial institutions, including those that may not have historically participated actively in small business lending, served their communities by becoming participating lenders in the SBA's Paycheck Protection Program. This program ended on May 31, 2021. The Bureau expects that by the time its 1071 rule is finalized and implemented, lending activity conducted pursuant to the SBA's Paycheck Protection Program will not be determinative of whether a given financial institution qualifies as a covered financial institution under the 1071 rule. The Bureau will continue to monitor the market and consider what other adjustments, if any, may be needed to ensure that, to the best of the Bureau's ability, the 1071 rulemaking is informed by up-to-date and accurate information about the small business lending market.

The Bureau seeks comment on its proposed 25 originations threshold incorporated into the definition of a covered financial institution. The Bureau also solicits comment on whether this threshold should alternatively be set at 50 or 100 covered credit transactions.

The Bureau is proposing to define a covered financial institution using a loan-volume threshold that must be achieved in each of the two preceding calendar years. SERs provided relatively little feedback directly on the measurement period, but broadly expressed a desire for clear, predictable collection and reporting thresholds. The Bureau received substantial feedback advocating for a two-year approach, but little feedback asking for a one-year threshold period. A few stakeholders also expressed interest in a measurement period longer than two years.

The Bureau acknowledges that a loan-volume threshold based on a two-year period could create some operational complexity for some financial institutions. To be sure that it was not a covered financial institution, a financial institution would need to maintain records sufficient to show total small business originations for both years of the threshold period. The Bureau believes that two years is not a prohibitively long time, although it is possible that infrequent lenders may have smaller staff or fewer resources to reliably track such information for 1071 purposes. The Bureau believes that a two-year threshold period is advisable to eliminate uncertainty surrounding data collection responsibilities. Under this proposal, a financial institution that may not frequently lend to small businesses, but that experiences an unusual and unexpectedly high lending volume in a single year would not be a covered financial institution. As discussed in part VII below, in order to comply with the Bureau's proposed 1071 rule, a financial institution may need to undertake substantial one-time costs that include operational changes, such as staff training, information technology changes, and develop policies and procedures. Therefore, the Bureau believes that it is appropriate to propose a two-year threshold period to provide more stability around reporting responsibilities. Regulations that implement HMDA and the Community Reinvestment Act provide similar periods to determine coverage.

The Bureau notes that employing a two-year approach would delay reporting for new, potentially active entrants. For example, under this proposal a large lender that enters the market and originates hundreds or even thousands of small business loans in its first two calendar years of lending would not report its covered applications. That is, under the Bureau's proposal, this financial institution would not be required to collect and report 1071 data on its covered applications for small businesses in those first two years, although the institution could choose to voluntarily collect and report data. The Bureau has concerns, however, about triggering data collection and reporting requirement based on lenders' estimates of their projected future volume.

The proposed two-year threshold period may pose other considerations for financial institutions that conduct small business lending activity near the proposed 25 small business originations threshold. See the section-by-section analysis of proposed § 1002.5(a)(4) above for a discussion of proposed § 1002.5(a)(4)(viii), which would allow a financial institution to collect ethnicity, race, and sex information pursuant to proposed subpart B for a covered application under certain circumstances during the second year of the threshold period. See the section-by-section analysis of proposed § 1002.114(c) below for discussion of additional flexibility that the Bureau is proposing regarding measuring lending activity prior to the rule's compliance date.

The Bureau is proposing to set the activity-based threshold based on small business originations, rather than applications. The statutory language of 1071 generally applies to applications; however, the Bureau believes that using small business originations for purposes of defining a covered financial institution is the better approach. The Bureau expects that financial institutions track their small business application volumes in various ways, but whether an origination resulted is a clear and readily identifiable metric. The Bureau is concerned that attempting to use an exemption metric based on applications would impose new obligations on financial institutions solely for purposes of determining whether or not they are subject to this rule. As discussed above, the Bureau believes that proposing an activity-based threshold that employs data already generally collected by financial institutions could mitigate the risk that section 1071, when implemented, would result in reduced access to credit. In addition, even those financial institutions that track total applications now may not do so in a way that fully aligns with how the Bureau is proposing to define covered applications for purposes of proposed subpart B. Using originations is also consistent with the Bureau's Regulation C. In addition, the Bureau received limited feedback advocating for the use of applications to set the activity-based threshold.

Proposed comment 105(b)–1 would clarify the meaning of a preceding calendar year for purposes of the proposed activity-based exemption. See the section-by-section analysis of proposed § 1002.114(c)(2) below for additional discussion regarding measuring lending activity prior to the rule's compliance date. Proposed

[476] There were 10,525 depository institutions as of December 31, 2019, including 112 credit unions that are not federally insured.

[477] Based on FFIEC Call Report data, there were 5,177 banks and savings associations as of December 31, 2019.

[478] Based on the 2019 NCUA Call Report data, there were 5,348 credit unions as of December 31, 2019, including 112 credit unions that are not federally insured.

comment 105(b)–2 would emphasize that a financial institution qualifies as a covered financial institution based on total covered credit transactions originated for small businesses, rather than covered applications received from small businesses. Proposed comment 105(b)–3 would explain that whether a financial institution is a covered financial institution depends on its particular small business lending activity in the two preceding calendar years, and that the obligations of a covered financial institution is an annual consideration for each year that data may be compiled and maintained under proposed § 1002.107(a).

The Bureau is proposing to clarify in § 1002.105(b) that for purposes of defining a covered financial institution, if more than one financial institution was involved in the origination of a covered credit transaction, only the financial institution that made the final credit decision approving the application shall count the origination. The Bureau believes that providing this clarifying language would assist financial institutions in understanding which transactions count towards the loan-volume threshold. This approach is consistent with the Bureau's proposed § 1002.109(a)(3).

Proposed comments 105(b)–4 and –5 would explain when a financial institution is a covered financial institution following a merger or acquisition. These proposed comments are largely consistent with the Bureau's approach to reporting obligations surrounding a merger under Regulation C,[479] with modifications to reflect the nature of the small business lending market and to provide additional clarifications.

Proposed comment 105(b)–6 would clarify that Regulation B (including proposed subpart B) generally does not apply to lending activities that occur outside the United States.

Finally, proposed comment 105(b)–7 would address financial institutions that do not qualify as covered financial institutions but may nonetheless wish to voluntarily collect and report small business lending data. This proposed comment would reiterate that proposed § 1002.5(a)(4)(vii) through (ix) permits a creditor that is not a covered financial institution under proposed § 1002.105(b) to voluntarily collect and report information regarding covered applications in certain circumstances. If a creditor is voluntarily collecting applicants' protected demographic information for covered applications, it shall do so in compliance with proposed §§ 1002.107, 1002.108, 1002.111, 1002.112, and 1002.114 as though it were a covered financial institution. Proposed comment 105(b)–7 would further state that if a creditor is voluntarily reporting those covered applications to the Bureau, it shall do so in compliance with proposed §§ 1002.109 and 1002.110 as though it were a covered financial institution.

The Bureau seeks comment on its proposed definition of a covered financial institution, which uses a loan-volume threshold of 25 covered credit transactions from small businesses. The Bureau continues to consider whether this loan-volume threshold should be changed to a different threshold, such as 50 or 100 originations from small businesses, and seeks feedback and data related to any of these three potential thresholds. In addition, the Bureau seeks comment on whether an activity-based threshold should be based on the total number of small business applications, rather than originations. The Bureau also requests comment on whether additional clarification is needed for this proposed definition.

Alternatives Considered—Size-Based Exemption and Combined Exemptions

The Bureau is not proposing to define a covered financial institution on the basis of the size of the financial institution, as measured by total assets for depository institutions or some other metric. Likewise, the Bureau is not proposing to define a covered financial institution with reference to the financial institution's size in combination with its small business lending activity.

For the reasons discussed above, the Bureau believes that proposing an exemption based on a financial institution's recent small business lending activity would be appropriate to carry out the purposes of section 1071. The Bureau believes that in comparison to a size-based exemption, an activity-based exemption is a more compelling basis for exempting certain financial institutions from coverage in light of section 1071's community development purpose. As previously stated, the Bureau is concerned that certain financial institutions might reduce or cease their small business lending activity because of the fixed costs of coming into compliance with this rule, and that a reduction in access to credit would run contrary to the community development purpose of section 1071. However, the Bureau is persuaded that small business lending activity holds a more direct relationship to a given financial institution's role in the small business lending market than a more general measurement of the financial institution's size as measured in total assets. Using a size-based metric would present a much rougher proxy for the risk that a financial institution may reduce or eliminate its small business lending activities as a result of the one-time costs of coming into compliance with this rule.

The Bureau also believes that proposing an activity-based exemption is a superior approach to proposing a size-based exemption because an exemption based on asset size would apply only to depository institutions. The Bureau is unaware of a similar size metric for nondepository institutions, and SERs and other stakeholders who provided feedback on the SBREFA Outline were not able to offer one. A size-based exemption approach might therefore risk distorting the collected data and create an uneven playing field. As noted above, other stakeholders explained that because there was no readily available equivalent size-based measurement for nondepository institutions, including an asset-based exemption might risk presenting a cost disadvantage for other small financial institutions. Moreover, exempting proportionately more depository institutions than nondepository institutions may present demographic data collection concerns. A recent small business credit survey revealed racial disparities in applications under the SBA's Paycheck Protection Program: the data showed white-owned firms were most likely to apply for a loan through a small bank (defined as under $10 billion in assets), while Black-owned firms were three times as likely as white-owned firms to apply for a loan through an online lender.[480] The Bureau is concerned that collecting data under different standards for depository institutions versus nondepository institutions would run contrary to the purposes of section 1071 and undermine the utility of the data, as well as the purposes of the Bureau, which are, in part, ''to implement and, where applicable, enforce . . . consistently'' Federal laws including ECOA.[481]

The Bureau also considered whether proposing a size-based exemption, on the basis of total assets for depository institutions, would be appropriate in combination with the above-discussed activity-based exemption. The Bureau is not persuaded that proposing such an additional exemption would be necessary or appropriate to carry out the

[479] *See* Regulation C comments 2(g)–3 and –4.

[480] Small Business Credit Survey of Firms Owned by People of Color at 14.

[481] 12 U.S.C. 5511(a).

purposes of section 1071. In particular, the Bureau considered two types of depository institutions that might be exempt by virtue of a size-based exemption:

- An Active Small Depository Institution (ASDI), meaning any depository institution smaller than a particular asset size that lends at or above a given activity-based threshold, and
- An Inactive Small Depository Institution (ISDI), meaning any depository institution smaller than a particular asset size that lends below a given activity-based threshold.

In examining the case for ASDIs and ISDIs, the Bureau believes that an additional, asset-based exemption may provide a slightly less costly means of ascertaining exemption status for a small number of ISDIs, but such an exemption would eliminate small business lending data from a moderate share of ASDIs that would otherwise provide valuable data in fulfilling both of section 1071's purposes.

Using the same data that were compiled for the activity-based exemption analysis, the Bureau estimates that under its proposed 25 originations threshold approximately 6,300 to 6,500 depository institutions would not be covered financial institutions, and therefore would be exempt from collection and reporting. The Bureau further estimates that proposing an asset-based exemption of $200 million would result in approximately 1,300 to 1,500 additional depository institutions not reporting (all of which, by definition, are ASDIs), while 5,200 to 5,400 depository institutions would already have been exempt, but have a somewhat lower-cost method of ascertaining this information (*e.g.,* ISDIs).[482]

Table 2 below indicates the estimated number of ASDIs that would report under various loan-volume thresholds, by asset size. As shown in Table 2, if the Bureau proposed an asset-based exemption of $100 million in addition to the proposed activity-based exemption of 25 originated covered credit transactions for small businesses, 500 to 592 more depository institutions would not be covered financial institutions, although these institutions originated more than 25 covered credit transactions for small businesses in each of the previous two years. Likewise, if the Bureau proposed an asset-based exemption of $200 million in addition to the proposed 25-originations activity-based exemption, 1,299 to 1,466 more depository institutions would not be covered financial institutions, although these institutions originated more than 25 covered credit transactions for small businesses in each of the previous two years.

**Table 2: Estimated active small depository institutions (ASDIs) by loan-volume threshold and asset category (as of 2019)**

| Thresholds | ASDIs with assets between 0 and $100 million | ASDIs with assets between $100 million and $200 million |
|---|---|---|
| 25 Originations | 500 – 592 | 799 – 874 |
| 50 Originations | 220 – 295 | 493 – 583 |
| 100 Originations | 64 – 103 | 216 – 285 |

Of the estimated 5,200 to 5,400 ISDIs, as defined by a 25 originations threshold and $200 million asset threshold, about 4,200 are credit unions and about 1,000 or 1,200 are banks. Furthermore, the vast majority of these ISDI credit unions (88 percent) had either no small business originations in 2017 and 2018 or fewer than 10 small business originations in 2017 and 2018 (97 percent).[483] The Bureau believes that it is likely that these institutions would be able to determine that they do not meet a loan-volume threshold almost as easily as they can determine that they do not meet an asset-based threshold. Only 34 credit unions with assets below $200 million had between 10 and 25 small business originations in both 2017 and 2018. The Bureau estimates that as many as 1,200 banks and 34 credit unions would benefit from a simpler method of determining exemption status. However, as stated above, the Bureau believes that such cost savings likely would still be minimal.

The Bureau therefore believes that providing an additional, asset-based exemption might provide a somewhat less costly means of ascertaining exemption status for some ISDIs, although this number may be relatively modest. However, the tradeoff of providing a simpler exemption for some depository institutions is that a $200 million asset-based exemption would increase the overall percent of exempt depository institutions by some 13 percentage points by also extending to ASDIs. The Bureau estimates that these ASDIs accounted for between 171,000 and 226,000 originations in 2019, or about 2 percent of total covered originations under the 25 originations threshold. Exempting additional depository institutions by adding an asset-based exemption would curtail

[482] For the purposes of this analysis, the Bureau assumes that the alternative proposal would have been that a depository institution would be required to report its small business lending activity for 2019 if it had more originations than the loan-volume threshold in 2017 and 2018 and had assets over the asset-based threshold on December 31, 2018. The Bureau further assumes that if two institutions merged in 2019 then the resulting institution would be required to report if the sum of the separate institutions' assets on December 31, 2018 exceeded the asset-based threshold. Of the 10,525 depository institutions that existed at the end of 2019, 6,687 either didn't exist at the end of 2018 or had merger adjusted assets below $200 million.

[483] However, it is possible that these credit unions have originated loans to small businesses with values below $50,000. Credit unions report commercial loans over $50,000 made to members (regardless of the borrower's size).

both the volume of and possible variety of data, and the Bureau is concerned that exempting ASDIs would detract from the utility of 1071 data in carrying out the purposes of section 1071 by removing important data from disclosure and review.

The Bureau also considered feedback from SERs and other stakeholders who suggested that the Bureau exempt lenders other than ''large'' financial institutions, such as depository institutions with more than $1 billion in assets, and then potentially extend the rule to smaller lenders at a later time. These SERs and stakeholders argued that this approach would capture the vast majority of small business loans while avoiding imposing undue regulatory burden on smaller lenders, who might be less capable of absorbing such costs. However, the Bureau is not currently persuaded that capturing lending data only from large financial institutions would be necessary or appropriate to carry out section 1071's statutory purposes.

Supporters of collecting data only from large depository institutions argue that such depository institutions may be more capable of absorbing compliance costs. However, the Bureau is concerned that data collection from only large depository institutions may not provide adequate data for community development purposes, as there may be demographic disparities among applications by the type (and size) of financial institution. Likewise, data collection from only large depository institutions would not allow the Bureau to conduct fair lending analyses for other types of financial institutions. In general, the Bureau believes that appropriately carrying out the purposes of section 1071 necessitates collecting small business lending data from all sizes and types of financial institutions (other than those with the lowest volume of lending activity), particularly given the variety of entities identified in section 704B(h)(1), discussed above. See the section-by-section analysis of proposed § 1002.114 below, however, for further discussion of a possible tiered compliance date based on the size of the financial institution.

Therefore, for the reasons described above, Bureau is not proposing an asset-based exemption to the definition of a covered financial institution.

Alternative Considered—Other Exemptions

The Bureau is not proposing to adopt alternative exemptions or exceptions to the definition of covered financial institution, other than the loan-volume threshold as described above.

As discussed above, the Bureau believes that, in light of the text and purposes of section 1071, the Bureau should generally adopt the posture that all manner of small business lenders should be subject to reporting. Feedback from SERs and others generally did not provide compelling policy reasons or legal arguments for exempting entire classes of financial institutions. Moreover, the Bureau believes that most policy arguments that were raised in this context are better addressed through potential activity-based considerations.

With respect to government lenders, the Bureau has not identified, nor did SERs or other stakeholders provide, policy or legal rationales for excluding government lenders from data collection. To the contrary, a few SERs, particularly CDFIs, strongly preferred that all lenders, including government entities, be subject to section 1071 data collection and reporting requirements; one stakeholder likewise urged the Bureau not to exempt government lenders. The Bureau believes that collecting information on small business lending by government entities furthers the purposes of section 1071. Moreover, the Bureau believes, as described above in the discussion of proposed comment 105(a)–1, that government entities are included within the phrase ''other entity'' in the ECOA section 704B(h)(1) definition of ''financial institution.'' For example, the Bureau believes that it will be helpful to identify the business and community development needs of women-owned, minority-owned, and small businesses by collecting lending data from both an online lender and a county-run assistance program for establishing new businesses.

For the same reasons, the Bureau does not believe that exempting not-for-profit lenders from data collection is consistent with the purposes of section 1071. The Bureau believes that organizations exempt from taxation pursuant to 26 U.S.C. 501(c) play a crucial role in lending to small businesses, particularly those that are women- or minority-owned, in certain communities.

Those providing feedback generally argued for categorical exemptions because, they said, certain financial institutions (1) would encounter difficulty absorbing compliance costs; (2) are integral to a community's lending needs; and/or (3) employ business methods or offer products not conducive to data collection and reporting. With respect to compliance costs, the Bureau believes that directly considering a financial institution's activity is a more appropriate way to address this concern. With respect to a financial institution's lending importance for a community or region (such as low income or rural), the Bureau believes that such arguments emphasize the importance of collecting and analyzing such data to further the purposes of section 1071 rather than justify an exemption. Finally, with respect to considering the particularities of certain business models, the Bureau is persuaded that it can most appropriately address such concerns by considering potentially modified reporting rules for particular business models and specific products. See the section-by-section analyses of proposed §§ 1002.104(b) and 1002.109(a)(3). The Bureau is proposing comment 105(a)–1, discussed above, consistent with the considerations discussed here.

Therefore, for the reasons described above, the Bureau is not proposing to define a covered financial institution by providing alternative exemptions or exceptions. The Bureau seeks comment on this approach, including data or information that might bear upon any such alternative exemptions in light of section 1071's purposes.

Section 1002.106 Business and Small Business

ECOA section 704B(h)(2) defines the term ''small business'' as having the same meaning as ''small business concern'' in section 3 of the Small Business Act.[484] The Bureau is proposing to define a small business consistent with the statutory language. In particular, the Bureau is proposing to define a small business concern to have the same meaning as the term ''small business concern'' in 15 U.S.C. 632(a), as implemented by 13 CFR 121.101 through 121.107. Notwithstanding the size standards set forth in 13 CFR 121.201, for purposes of proposed subpart B, the Bureau is proposing that a business is a small business if and only if its gross annual revenue for its preceding fiscal year is $5 million or less. The Bureau is seeking SBA approval for this alternate small business size standard pursuant to the Small Business Act.[485]

The Bureau believes it may be instructive for financial institutions to first consider whether an applicant may be a business under proposed § 1002.106(a), and then to consider, if the applicant is a business, whether the business is small under § 1002.106(b). Furthermore, the Bureau believes that these proposed definitions implement the statutory language of section 1071

[484] 15 U.S.C. 632.

[485] 15 U.S.C. 632(a)(2)(C).

while reflecting the need for a wide variety of financial institutions to apply a simple, broad definition of a small business that would be practical across the many product types, application types, technology platforms, and applicants in the market.

For the reasons set forth below, the Bureau is proposing § 1002.106 to implement ECOA section 704B(h)(2) and pursuant to its authority under ECOA section 704B(g)(1) to prescribe such rules and issue such guidance as may be necessary to carry out, enforce, and compile data under section 1071.

106(a) Business

Background

ECOA section 704B(h)(2) defines the term ''small business'' as having the same meaning as ''small business concern'' in section 3 of the Small Business Act.[486] The Small Business Act provides a general definition of a ''small business concern,'' authorizes SBA to establish detailed size standards for use by all agencies, and permits an agency to request SBA approval for a size standard specific to an agency's program. The SBA's regulations define a ''business concern'' as ''a business entity organized for profit, with a place of business located in the United States, and which operates primarily within the United States or which makes a significant contribution to the U.S. economy through payment of taxes or use of American products, materials or labor.'' [487]

SBREFA Proposals Under Consideration and Feedback Received

In the SBREFA Outline, the Bureau stated it was considering proposing to define ''small business'' by cross-referencing the SBA's general definition of ''small business concern'' but adopting a simplified size standard for purposes of its section 1071 rule.[488] Thus, the Bureau explained that it was considering a proposal under which financial institutions would not be required to collect and report 1071 data for not-for-profit applicants, because they are not ''organized for profit'' and are thus not a ''business concern.'' The Bureau explained that a business concern may take a number of different legal forms, including a sole proprietorship, partnership, LLC, corporation, joint venture, trust, or cooperative.[489] The Bureau explained that, because the definition is limited to American businesses, if the Bureau adopted this definition for purposes of 1071, loans to foreign companies would be outside the scope of 1071 data collection and reporting requirements.

Feedback from stakeholders regarding the proposal under consideration focused primarily on how the Bureau might define a business size standard, addressed below.[490] The Bureau did receive limited feedback, however, suggesting that the Bureau consider certain modifications or adjustments to the definition of a business concern, such as clarifying that the term does not include foreign-owned entities, certain trusts, and certain real estate holding companies.

Proposed Rule

Proposed § 1002.106(a) would define a business as having the same meaning as the term ''business concern or concern'' in 13 CFR 121.105. This proposed definition is consistent with ECOA section 704B(h)(2), which defines the term ''small business'' as having the same meaning as ''small business concern'' in section 3 of the Small Business Act.[491] The SBA has issued 13 CFR 121.105, ''How does SBA define 'business concern or concern,'" pursuant to the Small Business Act. The Bureau refers to the entirety of that section for additional information. In particular, the Bureau notes that this definition includes elements such as being ''a business entity organized for profit'' that has ''a place of business located in the United States'' and ''operates primarily within the United States or . . . makes a significant contribution to the U.S. economy.'' [492]

The Bureau is not providing interpretations of this SBA regulation in proposed subpart B because the Bureau believes that existing SBA interpretations are responsive to the general questions posed at SBREFA.[493]

The Bureau seeks comment on this proposed definition of a business, and generally seeks comment on whether additional clarification is needed.

106(b) Small Business

Background

*Section 1071 data collection purposes, requirements, and potential impacts.* A key component of the Bureau's fair lending work under the Dodd-Frank Act is to ensure fair, equitable, and nondiscriminatory access to credit for both individuals and their communities.[494] Section 1071 of the Dodd-Frank Act, which amended ECOA, requires financial institutions to collect and report to the Bureau data regarding applications for credit for women-owned, minority-owned, and small businesses. ECOA section 704B(h)(2) states that ''[t]he term 'small business' has the same meaning as the term 'small business concern' in section 3 of the Small Business Act (15 U.S.C. 632).'' Section 1071 was adopted for the dual statutory purposes of facilitating fair lending enforcement and enabling communities, governmental entities, and creditors to identify business and community development needs and opportunities of women-owned, minority-owned, and small businesses.[495]

As set forth in section 1071, the data that financial institutions would be required to collect and report to the Bureau include, among other things, the gross annual revenue of the business in the preceding fiscal year, the type and purpose of the loan, the census tract for the applicant's principal place of business, and the race, sex, and ethnicity of the principal owners of the business.[496] ECOA section 704B(f)(2)(C) further provides that information compiled and maintained under the statute shall be ''annually made available to the public generally by the Bureau, in such form and in such manner as is determined by the Bureau, by regulation.'' The Bureau believes that the collection and subsequent publication of robust and granular data pursuant to section 1071 regarding credit applications for small businesses, including those that are women- and minority-owned, will provide much-needed transparency to an otherwise opaque market and better ensure fair, equitable, and nondiscriminatory access to credit.

The Bureau understands that access to fair, equitable, and nondiscriminatory credit is crucial to the success of small businesses. Small businesses—including women-owned and minority-owned small businesses—need access to credit to smooth out business cash flows

[486] 15 U.S.C. 632.

[487] 13 CFR 121.105.

[488] SBREFA Outline at 14–18.

[489] 13 CFR 121.105(b).

[490] The SER feedback discussed in this section-by-section analysis can be found in the SBREFA Panel Report at 20–22.

[491] 15 U.S.C. 632.

[492] 13 CFR 121.105(a)(1).

[493] *See, e.g.,* 13 CFR 121.105(b), which states that a business concern may be in the legal form of an individual proprietorship, partnership, limited liability company, corporation, joint venture, association, trust or cooperative, except that where the form is a joint venture there can be no more than 49 percent participation by foreign business entities in the joint venture. Thus, for example, financial institutions would not be required to collect and report data under proposed subpart B for not-for-profit applicants, because they are not ''organized for profit'' and are thus not a ''business concern.''

[494] *See* 12 U.S.C. 5493(c)(2)(A).

[495] ECOA section 704B(a).

[496] ECOA section 704B(e)(2).

and to enable entrepreneurial investments that take advantage of, and sustain, opportunities for growth. The market these businesses turn to for credit is vast, varied, and complex. Overall, small businesses have many options when it comes to financing, including a wide range of products and providers. Yet market-wide data on credit to small businesses remains very limited, particularly with respect to applicants' protected demographic information at the core of section 1071. The Bureau believes that a section 1071 rulemaking would provide data that could serve as a significant resource for financial institutions, community groups, policy makers, and small businesses.

*SBA size standards.* The Small Business Act permits the Small Business Administrator to prescribe detailed size standards by which a business concern may be categorized as a small business, which may be based on the number of employees, dollar volume of business, net worth, net income, a combination of these, or other appropriate factors.[497]

As implemented by the SBA, these size standards generally hinge on average annual receipts or the average number of employees of the business concern and are customized industry-by-industry across 1,057 6-digit NAICS codes. Specifically, the SBA typically uses two primary measures of business size for size standards purposes: (i) Average annual gross receipts [498] for businesses in services, retail trade, agricultural, and construction industries, and (ii) average number of employees for businesses in all manufacturing, most mining and utilities industries, and some transportation, information and research and development industries. To measure business size, the SBA also uses financial assets for certain financial industries, and for the petroleum refining industry, it uses refining capacity and employees. The SBA's size standards are used to establish eligibility for a variety of Federal small business assistance programs, including for Federal government contracting and business development programs designed to assist small businesses in obtaining Federal contracts and for SBA's loan guarantee programs, which provide access to capital for small businesses that are unable to qualify for and receive conventional loans elsewhere. Under the Small Business Jobs Act of 2010 (Small Business Act),[499] the SBA is required to review all size standards no less frequently than once every five years.[500] The Small Business Act further provides that no Federal agency may prescribe a size standard for categorizing a business concern as a small business concern unless certain conditions are met, including approval by the SBA's Administrator.[501]

The SBA's rule governing its consideration of other agencies' requests for approval of alternate size standards requires that the agency seeking to adopt an alternate size standard consult in writing with the SBA's Division Chief for the Office of Size Standards in advance of issuing an NPRM containing the proposed alternate size standard.[502] The Bureau has met this requirement. After issuing an NPRM, the agency must provide a copy of the published NPRM to the Division Chief for the Office of Size Standards, and the agency cannot adopt a final rule including its alternate size standard until the size standard has been approved by the SBA's Administrator.[503]

*Market considerations.* A wide variety of financial institutions, with varying levels of sophistication and experience, extend credit to small businesses. As proposed, section 1071 applies to abroad range of financial institutions. Banks and credit unions that serve a breadth of customers typically organize their commercial lending operations into segments based on a combination of risk, underwriting, product offering, and customer management factors that are appropriate to each segment. The three most frequent organizational groupings are retail/small business, middle market, and large corporate banking. Commercial customers are generally assigned based on their revenue potential and aggregate credit exposure, with smaller accounts assigned to the retail/small business banking area. The overwhelming preponderance of small businesses are generally found in the retail/small business banking group, which may also conduct consumer banking.

Today, the distinguishing characteristic that many larger financial institutions (principally banks with $10 billion or more in assets) use to assign small businesses into the retail/small business banking group is gross annual revenue. While cut-offs vary by financial institution, the most common demarcations categorize small/retail customers as those below $5 million, or up to $10 million, in gross annual revenue. The maximum amount of a retail/small business banking term loan or credit line is typically $5 million or less.

Financial institutions that do not conduct SBA lending generally do not collect or consider the number of employees of a small business applying for credit, but they often capture gross annual revenue information, including for regulatory compliance purposes. Specifically, retail/small business lenders routinely collect applicants' gross annual revenue information because notification requirements under existing Regulation B vary for business credit applicants depending on whether or not they ''had gross revenues of $1 million or less in [their] preceding fiscal year.'' [504] For a business applicant with gross annual revenues of $1 million or less, a creditor must provide a notification following an adverse action, such as a credit denial, that is generally similar to that provided to a consumer in both substance and timing.[505] As a result, small business lenders often adopt compliance management systems similar to those found among consumer lenders.

The Bureau believes it is important for a financial institution to be able to quickly determine at the beginning of the application process whether an applicant is a ''small business'' for purposes of the 1071 rule. Financial institutions generally cannot inquire about an applicant's protected demographic information (including the race, sex, and ethnicity of an applicant's principal owners) without being legally required to do so.[506] As discussed in the *Overview* of this part V, this proposal will only require (and thus only permit) such inquiries for small businesses. While the Bureau is proposing to allow financial institutions flexibility in when they seek this protected demographic information, the Bureau believes that financial institutions generally have the best chance of obtaining it, and supporting the purposes of section 1071, if they ask for it in the earlier stages of the application process. As a result, a

[497] 15 U.S.C. 632(a)(2)(A) and (B).

[498] The SBA recently changed its regulations on the calculation of average annual receipts for all of SBA's receipts-based size standards, and for other agencies' proposed receipts-based size standards, from a three-year averaging period to a five-year averaging period, outside of the SBA Business Loan and Disaster Loan Programs. 84 FR 66561 (Dec. 5, 2019).

[499] Public Law 111–240, 124 Stat. 2504 (2010).

[500] 15 U.S.C. 632 note.

[501] 15 U.S.C. 632(a)(2)(C).

[502] 13 CFR 121.903(a)(2).

[503] 13 CFR 121.903(a)(5).

[504] 12 CFR 1002.9(a)(3)(i).

[505] *Id.* The notification requirements for applicants with gross annual revenues in excess of $1 million are generally more flexible in substance and also do not impose a firm deadline for provision of a Regulation B notification. 12 CFR 1002.9(a)(3)(ii).

[506] *See* 12 CFR 1002.5(a).

financial institution may need to know, even before the application is initiated, which application path the applicant must follow—a 1071-governed or a non-1071-governed application path.

*Early feedback.* From very early on in its discussions with stakeholders regarding section 1071, the Bureau has received feedback focused primarily on how the Bureau might define a business size standard. For example, in response to the Bureau's 2017 RFI, many stakeholders expressed concern about the difficulties in determining the appropriate NAICS code for businesses and in applying the NAICS-based standards in determining whether a business loan applicant is a small business. Commenters who addressed the issue of a small business definition were universally in favor of the Bureau adopting something less complex than the SBA's size standards based on 6-digit NAICS codes. Commenters noted that the use of these standards is relatively complex and would introduce burdens for the 1071 rule with limited benefit. There was broad support in this particular context for a simpler definition of small business, particularly echoing the 2017 RFI's mention of gross annual revenue as a threshold delineation defining a small business. In addition to revenue, number of employees, loan amount, total exposure of the business, or some combination of those factors were also mentioned as possible bases for alternate size standards. While community groups supported a simpler definition, some cautioned that whatever definition the Bureau chooses must cover most small businesses in order to comport with congressional intent.

SBREFA Proposals Under Consideration and Feedback Received

In the SBREFA Outline, the Bureau stated that it believed that using a simpler, more straightforward approach to the size standard aspect of the ''small business'' definition was a better approach for purposes of its 1071 rule.[507] The Bureau further stated that such an approach would assist both financial institutions and applicants seeking to quickly understand whether a business is ''small'' and to employ a workable size standard for small business data collection without navigating the potential complexities of determining the appropriate 6-digit NAICS code, and then the relevant size standard based on that NAICS code, for each applicant.

The Bureau stated in the SBREFA Outline that it was considering three alternative approaches to determining whether an applicant business is small.[508] These three approaches, described in more detail below, would have used: (1) Only gross annual revenue (''SBREFA First Alternative Approach''); (2) either the number of employees or average annual receipts/gross annual revenue, depending on whether the business is engaged in either manufacturing/wholesale or services (''SBREFA Second Alternative Approach''); or (3) size standards across 13 industry groups that correspond to 2-digit NAICS code industry groupings (''SBREFA Third Alternative Approach'').

Under the SBREFA First Alternative Approach, the Bureau considered proposing a size standard using the gross annual revenue of the applicant business in the prior year, with a potential ''small'' threshold of $1 million or $5 million.

Under the SBREFA Second Alternative Approach, the Bureau considered proposing a size standard of a maximum of 500 employees for manufacturing and wholesale industries and a maximum of $8 million in gross annual revenue for all other industries. The Bureau selected 500 employees as a potential threshold for manufacturing and wholesale industries because that figure is the most common of the SBA's employee-based size standards. The Bureau selected $8 million for all other industries because that figure is the most common size standard threshold for average annual receipts. The Bureau stated that it was considering using gross annual revenue, rather than the SBA's average annual receipts, for consistency with the 1071 statutorily required gross annual revenue data point.

Under the SBREFA Third Alternative Approach, the Bureau considered proposing a size standard using gross annual revenue or the number of employees based on a size standard in each of 13 2-digit NAICS code categories that applies to the largest number of firms within each 2-digit NAICS code category.[509] Applying the SBA's 2019 size standards, the third alternative would result in eight different size standards across the 13 categories.

The Bureau stated it was not planning to propose requiring that financial institutions verify information provided by applicants necessary for determining whether an applicant is small, regardless of the Bureau's approach to a small business size standard. Rather, the Bureau was considering proposing that a financial institution would generally report the information as provided by the applicant. However, if the financial institution verifies such information for its own purposes, it would report the verified information to the Bureau.

SERs generally preferred a simple small business definition and expressed concern that the SBA's approach to defining a small business—which bases classification on an applicant's 6-digit NAICS code—is relatively complex. The Bureau discusses the concerns with respect to the potential complexity of gathering NAICS codes in the section-by-section analysis of proposed § 1002.107(a)(15) below, and the Bureau discusses the concerns with respect to the potential complexity using NAICS codes to determine small business status below.

Nearly all SERs expressed some familiarity with the SBA's small business definition. More than half the SERs currently gather an applicant's NAICS code as a routine part of the application process, because NAICS codes are used for SBA loans and for CDFI Fund reporting. One SER also uses this information for tracking the concentration of its loans across certain industries. Some SERs gather NAICS codes from applicants' tax documents or business credit reports and others rely on information provided directly by the applicants; these SERs emphasized the importance of permitting reliance on applicant self-reported data.

One SER remarked that it would be critical for the purposes of section 1071 to have sectoral industry information about applicants in some form, such as NAICS codes, in order to ensure meaningful data. The Bureau discusses the independent value of NAICS codes, and related comments from SERs regarding certain difficulties and challenges surrounding collecting NAICS codes from applicants, in the section-by-section analysis of proposed § 1002.107(a)(15) below. Another SER expressly opposed using NAICS codes to determine whether an applicant is a small business for purposes of section 1071. A few SERs stated that they did not think it would be particularly costly to collect NAICS codes for all of their small business loans, and one SER described the SBA's classification

[507] SBREFA Outline at 16.

[508] *Id.*

[509] Specifically, under this approach, the Bureau first considered the total number of employer firms in each NAICS 6-digit industry, based on U.S. Census Bureau data. U.S. Census Bureau, *2017 Statistics of U.S. Businesses* (2017), *https://www.census.gov/data/datasets/2017/econ/susb/2017-susb.html.* Next, within each NAICS 2-digit industry, the Bureau determined how many unique size standards are applied within that 2-digit industry and the total number of employer firms to which each unique standard is applied. The simplified standard for each NAICS 2-digit industry is the one that applies to the largest number of firms within that industry.

approach as precise and not very burdensome.

Some SERs supported the SBREFA First Alternative Approach for defining a small business, which would use an applicant's gross annual revenue with a potential ''small'' threshold of $1 million or $5 million. Several SERs were supportive of this simple approach but thought the potential threshold should be higher. For most SERs, nearly all their small business customers had less than $5 million in gross annual revenue; most are under $1 million. Several SERs remarked that a $1 million gross annual revenue threshold would be too low, noting that it would exclude many businesses defined by SBA regulations as ''small''; some of these SERs said that a $5 million gross annual revenue threshold would be acceptable. Some SERs advocated for higher revenue thresholds, such as $8 million or $10 million. One SER cautioned that a small business definition based only on gross annual revenue would not account for regional variations in business size. One SER specifically suggested that the Bureau align its small business definition with the $1 million standard used by certain supervisory agencies for CRA reporting (which requires the reporting of loans in original amounts of $1 million or less to businesses and, if known, identification of whether the business's gross annual revenue is $1 million or less). However, this SER also supported other versions of the SBREFA First Alternative Approach and SBREFA Second Alternative Approach if the Bureau did not adopt the CRA approach. Relatedly, there were some concerns about capturing revenue information from small businesses. Some SERs do not collect these data now, or do not do so across all lending products. SERs also expressed a concern that some applicants likely would not know their gross annual revenue as a precise dollar amount. See the section-by-section analysis of proposed § 1002.107(a)(14) below for a discussion of the gross annual revenue data point.

Some SERs supported the Bureau's SBREFA Second Alternative Approach, which would distinguish between applicants in manufacturing and wholesale industries (500 employees) and all other industries ($8 million in gross annual revenue). These SERs stated that while this approach was still relatively simple, it would nonetheless capture most relevant data. One SER noted a discrepancy between the thresholds, stating that a manufacturer with 500 employees would be much larger than a business with $8 million in gross annual revenue. Some SERs expressed concerns about how to collect data on the number of employees, particularly regarding how part-time and seasonal employees, and contractors, would be counted. One SER suggested that a small business be defined as having less than $10 million in annual revenue and 50 or fewer employees. Another SER emphasized the importance of including collection and reporting requirements for applicants with very few or no employees on payroll, stating that most minority-owned and women-owned small businesses have no employees. One SER opposed the SBREFA Second Alternative Approach, stating that it would be too complex and potentially confusing.

One SER also supported the SBREFA Third Alternative Approach as closest to the SBA approach, stating that it reflects the SBA's substantially different definitions of a small business across different industries. This SER stated that the SBREFA First and Second Alternative Approaches would exclude many SBA-qualified small businesses. Other SERs also stated that this 2-digit NAICS code alternative was significantly less complex and prone to less human error than the SBA definition using 6-digit NAICS codes. On the other hand, one SER stated that the SBREFA Third Alternative Approach would be the most costly and difficult to implement compared to the other two alternatives under consideration.

The SBREFA Panel recommended that the Bureau seek to adopt a definition of ''small business'' that is easy for small business applicants to understand and straightforward for financial institutions to implement, while still collecting comprehensive data regarding lending to small businesses.[510] The SBREFA Panel also recommended that the Bureau continue to explore how information that small financial institutions may or may not currently collect from small business applicants (specifically, gross annual revenue, number of employees, and NAICS code) might inform the potential selection of an alternative for a ''small business'' size standard.[511] The SBREFA Panel also recommended that the Bureau continue to explore ways to minimize burden on both the small financial institutions collecting NAICS code information as well as the small business applicants who need to provide it, for example the possibility of collecting the 2-digit NAICS code rather than the 6-digit code.[512]

Feedback on the SBREFA materials from stakeholders other than SERs showed broad support for the Bureau pursuing a simplified version of the SBA small business definition, focusing chiefly on the size standard. A diverse array of stakeholders requested that the Bureau provide a simplified small business definition, including a wide variety of lenders, trade associations, and community groups. However, at least one commenter explicitly urged the Bureau to adopt the SBA definition. Reasons for supporting a simpler definition included that it might lower compliance costs (and therefore, the commenters noted, the cost of credit), it would obviate the need for financial institutions to understand or track the SBA size standards, and a more complex definition might impact data consistency or quality (either because financial institutions might incorrectly report data, or because the data itself might not lend itself to analysis). Several stakeholders voiced concern with respect to the SBA's detailed approach to categorizing the applicant's business, arguing that NAICS codes were developed for procurement, contained too many categories, and were not familiar to many financial institutions and applicants.

Stakeholders offered varying levels of support for the Bureau's proffered size standard alternatives, although in general there was more support for a standard using only gross annual revenue. Many stakeholders, including a variety of trade associations, supported the SBREFA First Alternative Approach; a few explicitly opposed it. Those voicing support generally preferred the simplicity of the approach; some stakeholders noted that a definition using gross annual revenue aligned with how lenders typically consider an applicant's size for other purposes. Stakeholders suggested that the Bureau select a specific revenue limit for small businesses including $500,000, $1 million, $5 million, and $8 million. Some stakeholders expressing support for a $8 million revenue limit noted that it would better capture small businesses in wholesale and manufacturing, while allowing the Bureau to adopt a single, uniform standard. Stakeholders opposing the SBREFA First Alternative Approach generally expressed concern with using gross annual revenue, either citing concerns about its accuracy or because they said a uniform gross annual revenue standard would not account for regional variation among

[510] SBREFA Panel Report at 44.

[511] *Id.*

[512] *Id.*

businesses or reflect the SBA's general approach to distinguishing businesses by industry. One stakeholder generally expressed concern that the SBREFA First Alternative Approach might exclude too many small business applicants from the 1071 rule.

Several stakeholders, mostly community groups, supported the SBREFA Second Alternative Approach; several comments from industry opposed the approach. Those in support of the SBREFA Second Alternative Approach characterized it as providing a balance between simplicity and providing results more closely aligned with the more comprehensive SBA approach, which distinguishes businesses by industry. Some stakeholders expressed concern with respect to distinguishing the nature of the applicant's business (*e.g.,* whether it was engaged in manufacturing or wholesale), and others thought that there may be difficulties accurately measuring the number of employees.

A few stakeholders supported the SBREFA Third Alternative Approach, while several explicitly opposed it. Supporters of the SBREFA Third Alternative Approach praised how closely the alternative aligned with the SBA's definition, while those in opposition criticized it as overly complex. In particular, those opposing this approach were concerned that it would still require financial institutions to have a close working knowledge of NAICS codes.

A few stakeholders advocated that the Bureau consider adopting a small business definition that incorporated loan size. Some of these stakeholders suggested that the Bureau consider aligning this definition with standards in the CRA. One stakeholder suggested that the Bureau define a small business as one with gross annual revenue of $1 million where the business has requested a loan of $1 million or less.

Proposed Rule

Proposed § 1002.106(b) would define a small business as having the same meaning as the term ''small business concern'' in 15 U.S.C. 632(a), as implemented in 13 CFR 121.101 through 121.107. The Bureau believes that adopting existing statutory and regulatory small business definitions, which are widely understood and already the subject of notice and comment, is consistent with the purposes of section 1071 and will facilitate compliance. Proposed § 1002.106(b) would further state that, notwithstanding the size standards set forth in 13 CFR 121.201, for purposes of proposed subpart B, a business is a small business if and only if its gross annual revenue, as defined in proposed § 1002.107(a)(14), for its preceding fiscal year is $5 million or less. This proposed definition largely adopts the SBREFA First Alternative Approach with a threshold of $5 million. The Bureau believes this proposed definition implements the statutory language of section 1071 while reflecting a need for financial institutions to apply a simple, broad definition of a small business. The Bureau is seeking SBA approval for this alternate small business size standard pursuant to the Small Business Act.[513]

Proposed comments 106(b)–1 and 106(b)–2 would clarify the obligations of covered financial institutions when new information may arise that could change the determination of whether an applicant is a small business, which in turn gives rise to requirements under proposed subpart B and/or prohibitions under existing Regulation B. The Bureau acknowledges that a financial institution's understanding of an applicant's gross annual revenue may change as the institution proceeds through underwriting. Proposed comment 106(b)–1 would explain that if a financial institution initially determines an applicant is a small business as defined in proposed § 1002.106 based on available information and obtains data required by proposed § 1002.107(a)(18) through (20), but the financial institution later concludes that the applicant is not a small business, the financial institution may process and retain the data without violating ECOA or this regulation if it meets the requirements of proposed § 1002.112(c)(3). Proposed comment 106(b)–2 would explain that if a financial institution initially determines that the applicant is not a small business as defined in proposed § 1002.106, but then later concludes the applicant is a small business, the financial institution shall endeavor to compile, maintain, and report the data required under proposed § 1002.107(a) in a manner that is reasonable under the circumstances.

Proposed comment 106(b)–3 would explain that a financial institution may rely on an applicant's representations regarding gross annual revenue (which may or may not include an affiliate's revenue) for purposes of determining small business status under § 1002.106(b).

For the reasons discussed above in the section-by-section analysis of proposed § 1002.106(a), the Bureau is proposing to define a small business as having the same meaning as the term ''small business concern'' in 15 U.S.C. 632(a), as implemented in 13 CFR 121.101 through 121.107. However, for reasons discussed in detail below, the Bureau is proposing that notwithstanding the size standards set forth in 13 CFR 121.201, for purposes of subpart B, a business is a small business if and only if its gross annual revenue, as defined in proposed § 1002.107(a)(14), for its preceding fiscal year is $5 million or less. Generally, the Bureau believes that adopting this gross annual revenue standard from the SBREFA First Alternative Approach is consistent with the purposes of section 1071 and addresses the concerns that the Bureau has heard with respect to determining whether applicants are small businesses for purposes of complying with section 1071, particularly with respect to the concerns regarding determining the applicant's NAICS code, and the implications thereof. Due to concerns expressed by other stakeholders, which are described above, and upon its own further consideration as discussed in this section-by-section analysis under *Alternatives Considered* below, the Bureau is not proposing the $1 million gross annual revenue standard from the SBREFA First Alternative Approach.

The Bureau seeks comment on this proposed definition of a small business, including the $5 million gross annual revenue size standard, as well as whether additional clarification is needed for any aspect of this proposed definition. The Bureau also seeks comment on whether another variation of the proposed size standard would better serve the purposes of section 1071, such as a lower revenue size standard or a higher one, potentially at the $8 million or $10 million level. The Bureau also seeks comment on whether, in addition to the above-described gross annual revenue-based size standard, a small business definition that also included any business that was furnished a loan pursuant to an SBA program (regardless of the applicant's gross annual revenue) would further the purposes of 1071.

Similarly, the Bureau seeks comment on whether the SBREFA Second Alternative Approach at $8 million gross annual revenue or 500 employees (depending on the type of business) would align more closely with section 1071's purposes. Likewise, the Bureau seeks comment on whether a variation of the proposed size standard, such as using an applicant's average gross annual revenue averaged over two or five years, would better serve the purposes of section 1071. In addition, the Bureau seeks comment on defining

[513] 15 U.S.C. 632(a)(2)(C).

a small business consistent with the entirety of existing SBA regulations, including any advantages or disadvantages that using such a definition might pose specifically in the context of this rulemaking. Specifically, the Bureau seeks comment on how the proposed size standard would fit in with a financial institution's current lending or organization practices. If the financial institution is an SBA lender, the Bureau seeks comment on whether the proposed size standard would introduce additional difficulties or challenges.

In order to keep pace with changes to the SBA's own size standards and the potential impact of future inflation, the Bureau is considering whether it might update its proposed $5 million gross annual revenue size standard over time (perhaps at the end of a calendar year in order to allow financial institutions to use the same threshold consistently throughout the year). The Bureau seeks comment on how this should be done and the frequency at which it should occur.

Alternatives Considered

*Gross annual revenue of $1 million.* Under the SBREFA First Alternative Approach, the Bureau considered proposing a size standard using the gross annual revenue of the applicant business in the prior year, with a potential ''small'' threshold of $1 million or $5 million.[514] However, upon further consideration, the Bureau is concerned that the $1 million threshold considered under the SBREFA First Alternative Approach likely would not satisfy the SBA's requirements for an alternative size standard across industries and would exclude too many businesses designated as small under the SBA's size standards.

*Loan size.* The Bureau considered defining a small business based at least in part on loan size. For example, one SER suggested that the Bureau align its small business definition with the $1 million standard for revenue and loan size used by certain supervisory agencies for CRA reporting. The Bureau also considered that under the FFIEC Call Report collections, banks report small loans made to businesses and farms. Through the Credit Union Call Report, credit unions report commercial loans over $50,000 made to members.

The Bureau believes that such potential definitions do not bear a sufficient relationship to the size of the business or its operations. The above-mentioned Call Report data, for example, is reported regardless of the size of the business. Thus, such Call Reports would capture lending information regarding small loans furnished to businesses that may be dominant in their field. Likewise, under a definition similar to the CRA, application data for businesses with low revenue that may be applying for large loans would be excluded. The Bureau does not believe that adopting such an approach would further the purposes of section 1071. The Bureau also received some stakeholder feedback cautioning against using the CRA definition based on loan size, because such a definition would exclude substantial portions of small business lending.

*Existing SBA size standards.* As discussed above, the Bureau is seeking approval from the SBA to use a $5 million gross annual revenue alternative size standard in defining a ''small business'' for purposes of this rulemaking, as the Bureau does not believe the SBA's size standards are suitable for this data collection initiative and prefers to establish a more appropriate small business definition limited to the section 1071 rulemaking.

The Bureau believes that requiring application of existing SBA size standards for the section 1071 rule could result in many financial institutions having to undergo operational and/or compliance management system changes. The Bureau believes that it will reduce burden for financial institutions, particularly those without sophisticated compliance management systems or familiarity with SBA lending, to comply with a gross annual revenue size standard for the section 1071 small business definition that better aligns with current lending practices.

If the Bureau were to adopt a small business definition using the existing SBA size standards that vary by industry based on 6-digit NAICS codes, financial institutions would only be able to request an applicant's protected demographic information further along in the application process, once they have obtained the multiple pieces of data that would be necessary to determine whether the applicant is small and, therefore, the 1071 process applies. The Bureau is concerned that this delay would make it more difficult for financial institutions to collect applicants' protected demographic information that is important to both of section 1071's statutory purposes. The Bureau is particularly concerned about financial institutions' ability to collect these data for applications that are withdrawn or closed for incompleteness early in the application process. These data collection considerations differ from those applicable to SBA lending programs, whereby a lender often cannot (and should not) make an accurate eligibility determination for an SBA loan until later in the application process, often after a loan has already been initially decisioned and after the lender has collected information related to size, time in business, and other data.

In order to allow financial institutions to quickly determine whether the section 1071 rule applies, the Bureau is seeking to minimize complexity for financial institutions in determining whether a covered application is reportable because the applicant business is a small business—a necessary determination for the 1071-based collection of any other information. The Bureau believes that the section 1071 rule would benefit from a universal, easy-to-apply reporting trigger that does not need to be supported by additional documentation or research. Such a reporting trigger must be easily understood by small business owners who may be completing an application online, or by the tens of thousands of customer-facing personnel who take small business applications in an industry with a typical annual turnover rate of 10 to 20 percent. The Bureau believes that a gross annual revenue reporting trigger will facilitate better compliance with 1071 requirements because it aligns with current lending and organizational practices.

The Bureau is concerned that requiring financial institutions to rely on the SBA's existing size standards for purposes of the section 1071 data collection and reporting requirements would pose risks to the efficient operation of small business lending. Based on the overwhelmingly consistent feedback the Bureau has received from stakeholders on this issue, the Bureau believes that using the SBA's existing size standards for the purposes of section 1071—wherein the financial institution must quickly determine the appropriate 6-digit NAICS code for businesses and then apply a variety of standards, including potentially gathering information to determine five years of the applicant's average annual receipts or employee information—would not align with current lending and organizational practices. Application of the existing size standards, at the beginning of the application process, could slow down the application process, particularly at institutions that are often able to render credit decisions in a matter of minutes; the Bureau is concerned that financial institutions may be compelled to raise the cost of credit or originate fewer

[514] SBREFA Outline at 16.

covered credit transactions as a result. Such an outcome could needlessly affect access to credit for small businesses. Eliminating credit opportunities or reducing access to credit to small businesses, including women-owned and minority-owned small businesses, in this way would conflict with the statutory purpose of section 1071 to ''enable communities, governmental entities, and creditors to identify business and community development needs and opportunities of women-owned, minority-owned, and small businesses.'' [515]

The Bureau expects that many financial institutions, for efficiency, will bifurcate their business credit application procedures based on an initial determination of whether the application will be subject to section 1071. The Bureau therefore believes that many financial institutions will not proceed with taking applicant information until the financial institution is able to determine that the applicant is small (in which case, section 1071 will require the financial institution to collect and report the applicant's protected demographic information) or that the applicant is not small (where ECOA generally prohibits the financial institution from collecting protected demographic information). If this process requires determining the correct NAICS code for the applicant, and in many cases, requesting five years of average annual receipts or employee information from the applicant, the Bureau believes that businesses seeking access to credit will encounter, at a minimum, otherwise avoidable delays in processing applications.

The Bureau believes that the $5 million gross annual revenue standard it is proposing is a more efficient and appropriate measure of applicant size for purposes of determining whether small business lending data collection is required pursuant to section 1071. The Bureau understands that the SBA generally bases business concern size standards on average annual receipts or the average number of employees of the business concern, as customized industry-by-industry across 1,057 6-digit NAICS codes. The SBA typically uses two primary measures of business size for size standards purposes: (i) Average annual gross receipts [516] for businesses in services, retail trade, agricultural, and construction industries, and (ii) average number of employees [517] for businesses in all manufacturing industries, most mining and utilities industries, and some transportation, information, and research and development industries.[518] The Bureau understands that SBA's size standards are used to establish eligibility for a variety of Federal small business assistance programs, including for Federal government contracting and business development programs designed to assist small businesses in obtaining Federal contracts and for SBA's loan guarantee programs, which provide access to capital for small businesses that are unable to qualify for and receive conventional loans elsewhere. The Bureau notes that the size standard used under section 1071 would only be used to determine whether small business lending data collection is required pursuant to section 1071, and would have no bearing on eligibility for Federal small business assistance. Moreover, the Bureau believes it is far more likely that an applicant will be able to readily respond to a question regarding its gross annual revenue for the preceding fiscal year—something already contemplated by existing Regulation B for all business credit to determine whether notice requirements apply [519]—than offer the closest metric currently in use by SBA regulations, which is generally average annual receipts for the previous five fiscal years.[520] Furthermore, use of this gross annual revenue standard would be efficient, as a financial institution is statutorily required to collect and report gross annual revenue by ECOA section 704B(e)(2)(F).

The Bureau believes that section 1071 differs from other programs that may have been contemplated pursuant to the Small Business Act's provisions pertaining to the establishment of size standards. First and most notably, the rulemaking contemplated by section 1071 is not a ''program'' in the traditional sense of a procurement or other Federal assistance program; the rule would not confer a direct benefit or advantage to the small business applicant or financial institution in terms of contract, procurement, loan guaranty, or government backed debenture. Rather, financial institutions will be contributing information about credit applications for businesses identified as small under section 1071—information that will be valuable to the Bureau, financial institutions, policymakers, and other stakeholders, including small businesses. Second, unlike other such alternative size standard requests, the Bureau notes that a size standard under section 1071 would apply to businesses across all sectors applying for financing, rather than a particular industry or sector. And third, the Bureau believes that arriving at a simplified size standard is an essential element to this ''program,'' as more complex approaches may limit opportunities for small businesses by reducing access to credit.

Section 1071 is also unique in that Congress specified that the data collection regime include a particular form of revenue for the businesses at issue. As discussed in the section-by-section analysis of proposed § 1002.107(a)(14) below, section 1071 requires a financial institution to collect ''the gross annual revenue of the business in the last fiscal year of the women-owned, minority-owned, or small business loan applicant preceding the date of the application.'' [521] The Bureau considered whether under section 1071 a financial institution should have to apply two different revenue-based rules (first, one for determining whether the business is small under the existing SBA size standards and therefore section 1071 data must be collected and reported; and, second, if the business is small, another for reporting the business's gross annual revenue in the last fiscal year), or whether applying only one revenue-based rule for section 1071 could be sufficient. The Bureau believes that requiring financial institutions to apply both would be unnecessarily confusing and burdensome, and would also increase potential for errors in data collection. The Bureau does not believe it is appropriate to use only average annual receipts, given the language of section 1071. Moreover, as discussed below, section 1071 amends ECOA, which already incorporates gross annual revenue as implemented under existing Regulation B.

ECOA section 704B(e)(2)(G) requires a financial institution to collect and report the race, sex, and ethnicity of the principal owners of the business. Existing Regulation B generally prohibits a creditor from inquiring about

[515] ECOA section 704B(a).

[516] The Bureau understands that the SBA recently changed its regulations on the calculation of average annual receipts for all of SBA's receipts-based size standards, and for other agencies' proposed receipts-based size standards, from a three-year averaging period to a five-year averaging period, outside of the SBA Business Loan and Disaster Loan Programs. 84 FR 66561 (Dec. 5, 2019).

[517] Generally, the average number of employees of the business concern is used (including the employees of its domestic and foreign affiliates) based upon numbers of employees for each of the pay periods for the preceding completed 12 calendar months. *See* 13 CFR 121.106(b)(1).

[518] To measure business size, the SBA also uses financial assets for certain financial industries, and for the petroleum refining industry, it uses refining capacity and employees.

[519] *See* 12 CFR 1002.9(a)(3).

[520] 13 CFR 121.104(a) and (c).

[521] *Id.*

such protected demographic information in connection with a credit transaction unless otherwise required by Regulation B, ECOA, or other State or Federal law, regulation, order, or agreement.[522] Thus, in order to avoid potential liability under ECOA and existing Regulation B, a financial institution must accurately determine that a business credit application is subject to section 1071 before inquiring about the applicant's protected demographic information. The Bureau does not believe the SBA's existing size standards allow for the quick and accurate determination of small business status required for this 1071 data collection initiative. Specifically, the Bureau does not believe this determination can be quickly and accurately made if, as required under the SBA's existing size standards, the financial institution must determine the appropriate NAICS code for the business and then apply the NAICS-based size standards to determine whether a business loan applicant is a small business.

As discussed above, SERs and other stakeholders have expressed concern to the Bureau about the difficulties in determining the appropriate NAICS code for businesses and in applying the NAICS-based size standards. They generally preferred a simple small business definition and expressed concern that the SBA's approach to defining a small business—which bases classification on an applicant's 6-digit NAICS code—is relatively complex in this context. The Bureau believes that removing a NAICS-based small business determination as a step in determining small business status will both facilitate compliance and better achieve the purposes of section 1071. The Bureau understands that one reason that SERs and others expressed a strong desire for a simple approach to determining whether an applicant is small is that this initial determination may drive the application process. To comply with section 1071 requirements, financial institutions may use a different application process, or different or additional application materials, with applicants for business credit that are small businesses than they do with applicants that are not small businesses. Thus, quickly and accurately determining whether an applicant is a small business at the outset of the application process may be a crucial step, one that financial institutions would benefit from being able to seamlessly accomplish. Considering the requirements and prohibitions in ECOA with respect to protected demographic information, the Bureau understands the import that financial institutions have placed on both the speed and accuracy of this determination.

As discussed in the section-by-section analysis of proposed § 1002.107(a)(15) below, the Bureau believes that NAICS codes possess considerable value for section 1071's fair lending purpose as well as its business and community development purpose beyond being necessary for determining whether an applicant is a small business under the SBA's size standards. The Bureau is therefore proposing that financial institutions be required to collect and report NAICS codes as one of the data fields for applications subject to section 1071. However, the Bureau believes that gathering NAICS code information at some point during the application process, while still the subject of some concern for financial institutions, is a different consideration from requiring NAICS information as a necessary step to beginning an application (and correctly determining which type of application to initiate).

The Bureau also believes that this simplified alternative size standard will provide largely consistent reporting results, as compared to adopting the full SBA size standards. The Bureau used data from the U.S. Census's 2012 Statistics of U.S. Businesses (SUSB) and the U.S. Department of Agriculture's 2012 Census of Agriculture to analyze how each of the Bureau's contemplated alternative approaches would change the number of businesses defined as ''small'' relative to the SBA definition.[523] If all NAICS classifications and size assessments could be done correctly, applying the SBA's full 6-digit NAICS code-based size standards would result in complete coverage of small businesses as defined by the SBA—all applications by small businesses would be reported (other than those made to financial institutions that qualify for an exemption) and no applications made by non-small businesses would be reported. The Bureau estimates that 270,000 businesses that would be small under the SBA's existing size standards (out of 7.2 million small employer businesses and farms) would not be covered by the Bureau's proposed $5 million gross revenue standard. The Bureau further estimates that the Bureau's proposed rule would cover some 77,000 businesses that would not be small under the SBA size standards. The Bureau believes that such variation with respect to the SBA's current size standards is an appropriate trade-off for the reasons described herein.

The Bureau notes, however, that a $5 million gross annual revenue alternative size standard would affect some industries more than others. That is, applications for small businesses would be reported to the Bureau less from some industries than others. In general, there will be a larger proportion of businesses whose applications would not be reported in industries with a higher revenue-based size standard. The industries most affected by this are the retail trade and construction industries. Other industries that would be disproportionately affected may include manufacturing, wholesale trade, health care and social assistance, and professional, scientific, and technical services. The Bureau received little public feedback with respect to such concerns, although the Bureau seeks comment with respect to any potential effects on particular subsets of applicants that may be disproportionately included or excluded on the basis of a gross annual revenue standard (such as those subject to employee-based size standards), particularly in light of section 1071's purposes.

The Bureau also believes that a simplified size standard will be important for financial institutions that may not frequently engage in small business lending in determining whether they are covered under the 1071 rule. As discussed in the section-by-section analysis of proposed § 1002.105(b), the Bureau is proposing to mandate section 1071 small business lending data collection only from those financial institutions that originated at least 25 covered credit transactions from small businesses in each of the two preceding calendar years. Those financial institutions that do not frequently lend to small businesses will be seeking to track precisely how many covered credit transactions for small businesses they have originated. The Bureau believes that it is important to empower financial institutions to quickly ascertain whether a covered credit transaction was furnished to a small business, such that infrequent lenders can continue to monitor

[522] Existing § 1002.5(a)(2). ECOA states that it is not discrimination for a financial institution to inquire about women-owned or minority-owned business status, or the race, sex, and ethnicity of principal owners pursuant to section 1071. 15 U.S.C. 1691(b)(5).

[523] The 2012 SUSB is the most recent Census product to have categories of revenue and employees granular enough to conduct this analysis. The Bureau constructed the 2012 equivalents of the second and third alternatives due to the vintage of the SUSB data available and used the SBA's 2012 size standards for the analysis. The 2012 SUSB only covers employer firms or businesses with at least one employee.

whether section 1071 compliance is required.

*Average gross annual revenue.* The Bureau considered proposing an approach that would use an *average* gross annual revenue calculated over an averaging or ''lookback'' period instead of using the gross annual revenue for the *preceding fiscal year.* This alternative approach would be similar to the SBA approach of using a five-year annual receipts average. The Bureau understands that the SBA expects the five-year average to: (i) Enable some mid-size businesses currently categorized above their corresponding size standards to gain or regain small business status and thereby qualify for participation in Federal assistance intended for small businesses, and (ii) allow some advanced and larger small businesses close to their size thresholds to lengthen their small business status for a longer period and thereby continue their participation in Federal small business programs.[524] However, because the 1071 rule is not connected to eligibility for participation in any Federal programs for small business loans, grants, procurement, or otherwise, the Bureau believes that allowing financial institutions to consider applicants' gross annual revenue for the preceding fiscal year is sufficient for 1071 purposes. The Bureau also notes that using gross annual revenue for the preceding fiscal year is consistent with the notification requirements of existing Regulation B and the Bureau's approach in proposed § 1002.107(a)(14) regarding the gross annual revenue data point. The Bureau believes that using this measure instead of an average will better align with current lending practices and will simplify determinations regarding 1071 reporting status.

Section 1002.107 Compilation of Reportable Data

107(a) Data Format and Itemization

Background

ECOA section 704B(e) requires financial institutions to ''compile and maintain'' records of information provided by applicants ''pursuant to a request under subsection (b),'' and requires them to ''itemiz[e]'' such information to ''clearly and conspicuously disclose'' a number of data points;[525] the Bureau refers to these as statutory data points. Section 704B(e)(2)(H) provides the Bureau with authority to require ''any additional data that the Bureau determines would aid in fulfilling the purposes of [section 1071]''; the Bureau refers to data points adopted under this authority as discretionary data points. The stated statutory purposes of 1071 are twofold: (1) To facilitate enforcement of fair lending laws; and (2) to enable communities, governmental entities, and creditors to identify business and community development needs and opportunities of women-owned, minority-owned, and small businesses.[526] The Bureau notes that ''discretionary'' in this context means discretionary for the Bureau to adopt, not discretionary for financial institutions to comply with.

The 1071 data collected and reported by financial institutions would generally be made available to the public unless the Bureau decides to delete or modify certain data to advance a privacy interest.[527] As discussed below in part VI, the Bureau is proposing to use a balancing test to determine what data should be deleted or modified, but does not intend to apply the balancing test until financial institutions have reported at least a full year of 1071 data to the Bureau. The Bureau notes that the utility of 1071 data to particular groups of data users will depend on the specific data collected and the form, manner, and extent to which the Bureau makes such data available to the public.

The users of data from the Bureau's proposed 1071 rule could include the Bureau itself; other Federal agencies including the prudential banking regulators; Congress; State and local governments; community, consumer, and civil rights groups; researchers and academics; financial institutions; small businesses; and small business trade organizations. The comprehensive data that would be collected under the Bureau's rule is not available elsewhere, though some aggregate information for some loans to businesses—but not applications—exists in other sources. For example, there are several datasets on loans to businesses by depository institutions. The FFIEC Call Report data provide information on banks' and savings associations' total outstanding number and amount of loans to businesses for loans under $1 million and farms for loans under $500,000. The CRA requires banks and savings associations with assets over a specified threshold ($1.322 billion as of 2021) to report data on loans to businesses with origination amounts of $1 million or less and loans to farms with origination amounts of $500,000 or less. NCUA Call Reports include information on credit unions' outstanding and originated commercial loans to members over $50,000. Though the Bureau and other agencies with supervisory jurisdiction can currently approximate some 1071 data through requests during examinations of individual institutions, the agencies would only have access to data from a relatively small number of such institutions at any one time and the data obtained would not be uniform among institutions. The availability of uniform 1071 data across different types of financial institutions should significantly improve agencies' ability to focus limited supervisory resources on institutions with higher fair lending risk. Section 1071 data may also provide insight into how well the market is meeting the credit needs of small businesses in general, as well as women- and minority-owned small businesses in particular, and could potentially be used to identify market opportunities.

The Bureau has received feedback relevant to the 1071 rulemaking from a variety of sources, including through the SBREFA process as well as the Bureau's 1071 Symposium and the 2017 RFI on small business lending. This feedback addressed, among other things, the potential inclusion of discretionary data points in the 1071 rulemaking, which is discussed further below. By discussing these potential discretionary data points under consideration in the SBREFA Outline, the Bureau obtained helpful feedback on costs and benefits from the SERs and other stakeholders to inform the Bureau's decision-making for purposes of this NPRM.

SBREFA Proposals Under Consideration and Feedback Received

In the SBREFA Outline, the Bureau explained its understanding of the data points enumerated in section 1071.[528] The Outline noted that ECOA section 704B(b) requires financial institutions to inquire whether an applicant for credit is a women-owned, minority-owned, or small business. In addition, the statute states that the information compiled and maintained by a financial institution under section 704B(e)(1) shall be itemized in order to clearly and conspicuously disclose a number of particular items that are enumerated in the statute. In the Outline, the Bureau

[524] *See* 84 FR 66561, 66562 (Dec. 5, 2019).

[525] As discussed in greater detail above in E.2 of the *Overview* to this part V, the Bureau interprets the phrase ''pursuant to a request under subsection (b)'' in section 1071 as referring to all of the data points contemplated by ECOA section 704B(e), not merely whether the applicant is a minority-owned, women-owned, or small business.

[526] ECOA section 704B(a).

[527] ECOA section 704B(e)(4), (f).

[528] SBREFA Outline at 24.

stated that it was considering proposing to require all of these data points.[529]

The Bureau also discussed in the SBREFA Outline its proposals under consideration regarding data points adopted pursuant to its discretionary data points authority under ECOA section 704B(e)(2)(H).[530] The Bureau explained that it was considering proposing to require that financial institutions report discretionary data points regarding pricing, time in business, NAICS code, and number of employees.

SERs provided feedback on nearly all aspects of the data points under consideration, including certain feedback applicable to all data points.[531] Regarding data points generally, most SERs requested that the Bureau make the collection and reporting of data points as simple as possible. Two SERs stated that collecting and reporting the statutory data points would not pose any issues because they collect them now. A number of SERs urged the Bureau to require collection and reporting of a number of data points based only on information as provided by the applicant. One SER stated that the Bureau should be aware that, as with HMDA reporting, the cost of collecting and reporting the data points will include expensive data quality scrubs in order to avoid negative examination findings. Another SER stated that it will be challenging to standardize the data so reporting can be automated, and that this will likely require significant training and a tremendous amount of human intervention.

Furthermore, some SERs expressed concern about asking applicants to provide certain information (in particular the race, sex, and ethnicity of principal owners), as they believed that applicants would feel uncomfortable providing, or even being asked about, that information, and that if applicants are denied credit they might feel it was because of the protected demographic information they provided. One SER stated that the collection of 1071 data could seem like an intrusion of privacy by the financial institution, particularly to minority borrowers. The SER stated that prospective applicants may decide to seek financing elsewhere. Another SER stated that some prospective applicants' distrust of the Federal government (and concern over how 1071 data might be used) might adversely impact their ability to lend to the communities they serve. Other SERs that currently collect this information (for example, because they are CDFIs or SBA lenders) indicated that they generally do not have difficulty collecting demographic information from borrowers.

Several SERs suggested that the Bureau develop a system to assist in the collection of applicants' protected demographic information, and possibly other applicant-provided 1071 data, that would avoid the need for financial institutions to request and store sensitive information about applicants. One SER suggested that this system could also permit applicants to input their addresses for geocoding.

SERs also provided detailed feedback on the discretionary data points that the Bureau was considering. One SER stated that the cost of collecting and reporting the discretionary data points under consideration would be significant, and another SER stated that the Bureau should include as few data points as possible to avoid unnecessary costs. Another SER stated that the Bureau should finalize a rule with just the statutorily required data points and avoid adding any discretionary data points. That SER suggested that if the Bureau does include discretionary data points, the Bureau could consider providing an exemption from discretionary data point collecting and reporting for certain small 1071 reporters, similar to the partial data point exemption approach taken under HMDA.[532]

Other SERs favored the inclusion of some or all of the discretionary data points. Two SERs stated their support for the inclusion of all four discretionary data points under consideration. One of these SERs suggested that the Bureau also collect information regarding the way the application was taken (in person, by phone, or online) in order to monitor possible discouragement of applicants. The other SER suggested that the Bureau also collect credit score information.

Stakeholders commenting on the statutory data points and data points in general largely echoed the SERs' concerns. Industry commenters suggested that the method of collection be as clear and simple as possible, that the cost burden be taken into account, and that the Bureau not require verification of applicant-provided information. Community groups largely supported the Bureau's proposals under consideration for the statutory data points, and emphasized the importance of the new 1071 data collection regime.

A large majority of industry stakeholders commenting on the SBREFA Outline opposed the collection of any discretionary data points, stating that including them would be overly burdensome and unnecessary. Industry commenters argued that the 1071 rule would be very burdensome in any case, requiring new software and onerously different business processes, and adding data points would only increase that burden. Some commenters stated that collecting and reporting the discretionary data points would increase compliance obligations and costs, and likely impact credit costs and availability for small business customers. Some commenters were concerned about the discretionary data points being made public without contextual information, potentially leading to damaging misinterpretations. One stakeholder stated that unnecessary discretionary data points would add to the already significant privacy concerns of financial institutions and borrowers. Several commenters suggested that the Bureau consider an incremental approach to expanding the data collection in the future should the statutory fields not be sufficient to accomplish the original intent of 1071. Several other stakeholders suggested that if the Bureau includes discretionary data points, it should provide an exemption from reporting them for smaller financial institutions.

Community groups and several community development lenders supported mandatory reporting of the discretionary data points under consideration, saying that they would help achieve section 1071's purposes. One stakeholder stated that the discretionary data points under consideration relate to underwriting decisions and must be accounted for so credit providers cannot—as they said HMDA reporters have done for years—hide behind data not collected as justification for their lending disparities. A community development lender supported the collection of the discretionary data points, but suggested that the Bureau not collect number of employees. Some stakeholders suggested additional discretionary data points.

Regarding data points in general, the SBREFA Panel recommended that the Bureau consider proposing in the NPRM that applicant-provided data points be self-reported by the applicant only, without an obligation for the financial institution to verify the information

[529] *Id.* at 24–36.

[530] *Id.* at 33.

[531] The SER feedback discussed in this section-by-section analysis can be found in the SBREFA Panel Report at 25–30.

[532] *See* Regulation C § 1003.3(d).

provided by the applicant.[533] Regarding the discretionary data points, the SBREFA Panel recommended that if time in business, number of employees, and NAICS code become part of the proposal, the Bureau continue to explore ways to minimize the burden to small financial institutions of collecting and reporting such data; and with respect to NAICS code specifically, the burden on small business applicants who need to provide the information.[534] As to pricing, the Panel recommended that if this data point becomes part of the proposal, the Bureau seek comment on potential methods for avoiding misinterpretations of disparities.[535]

Proposed Rule

The Bureau is proposing to adopt the statutory data points largely consistent with its proposals under consideration at SBREFA, but with certain changes as discussed in the section-by-section analyses of the individual data points below. Consistent with its approach under consideration in the SBREFA Outline,[536] the Bureau is proposing discretionary data points relating to pricing, time in business, NAICS code, and number of workers. In addition, based on feedback from SERs and other stakeholders and in the course of developing the proposed rule, the Bureau identified several additional data points that it believes would be important to the quality and completeness of the 1071 data collected and would aid significantly in furthering the purposes of section 1071. The proposed rule would adopt additional discretionary data points regarding application method, application recipient, denial reasons, and number of principal owners. In addition, the Bureau is relying on ECOA section 704B(e)(2)(H), as well as its authority under 704B(g)(1), to make certain clarifications to the statutory data points. These data points are all discussed in detail in the section-by-section analyses of proposed § 1002.107(a)(1) through (21) below.

The Bureau continues to believe that discretionary data points for pricing, time in business, NAICS code, and number of workers would serve the purposes of 1071, improve the utility of the data for stakeholders, and potentially reduce the occurrence of misinterpretations or incorrect conclusions based on analysis of an otherwise more limited data set. The Bureau also believes that discretionary data points for application method, application recipient, denial reasons, and number of principal owners would help to achieve these goals more effectively.

In proposing these discretionary data points, the Bureau considered the additional operational complexity and potential reputational harm that collecting and reporting discretionary data points could impose on financial institutions. The Bureau has sought to respond to industry concerns regarding discretionary data points by proposing a limited number of discretionary data points that would offer the highest value in light of 1071's statutory purposes. For this reason, the Bureau is not proposing certain additional discretionary data points suggested by SERs and other stakeholders such as credit score or applicant's business structure (see the discussion below). In addition, the Bureau has not chosen to take an incremental approach to adding data points, as one stakeholder suggested, or permitting collecting and reporting of discretionary data points to be phased in over time. The Bureau believes the information from the proposed discretionary data points would further section 1071's purposes for the reasons stated above, and should be collected and reported as soon as possible. In addition, data from these discretionary data points would be an important part of the privacy balancing test analysis that would be conducted after the first year of 1071 data is received.[537] The Bureau will consider industry concerns about potential reputational harm that collecting and reporting discretionary data points could impose on financial institutions when it conducts the privacy balancing test analysis.

In regard to the specific method by which a financial institution would collect the 1071 data points, the proposed rule would require a covered financial institution to compile and maintain data regarding covered applications from small businesses, and require that the data be compiled in the manner prescribed for each data point and as explained in associated Official Interpretations (included in this proposed rule) and the *Filing Instructions Guide* (FIG) that the Bureau anticipates later providing on a yearly basis. The proposed rule would then explain that the data compiled shall include the items described in proposed § 1002.107(a)(1) through (21). The Official Interpretations, sometimes referred to as official comments or official commentary, provide important guidance on compliance with the regulation and are discussed in this preamble in relation to each data point as well as other regulatory provisions. The FIG would provide instructions on the operational methods for compiling and reporting data, including which codes to report for different required information. The FIG would be updated yearly, as is the FIG that is used with HMDA compilation and reporting.[538]

The Bureau notes that some of the details contained in the proposed regulatory text and commentary may also be appropriate for inclusion in the FIG, and it anticipates that it may choose to relocate some such details to the FIG when issuing the final rule. For example, proposed § 1002.107(a)(1) addresses the unique identifier data point. A portion of proposed comment 107(a)(1)–1 would explain that the unique identifier must not exceed 45 characters, and may only include standard numerical and/or alphabetical characters and cannot include dashes, other special characters, or characters with diacritics. At the final rule stage, the Bureau might consider removing those details from the commentary and addressing them instead in the FIG, in order to preserve flexibility in how the submission platform is ultimately designed and implemented.

Proposed comment 107(a)–1 would provide general guidance on complying with § 1002.107(a), and would explain that: (i) A covered financial institution reports the data even if the credit originated pursuant to the reported application was subsequently sold by the institution; (ii) a covered financial institution annually reports data for covered applications for which final action was taken in the previous calendar year; and (iii) a financial institution reports data for a covered application on its small business lending application register for the calendar year during which final action was taken on the application, even if the institution received the application in a previous calendar year. The Bureau believes that these operational instructions would clarify a financial institution's collection and reporting requirements and so facilitate compliance. The Bureau also believes that these instructions would help to ensure the accuracy and consistency of the data collected and reported.

The Bureau crafted the proposed rule in consideration of the concerns and input of the SERs and other stakeholders. First, the proposed rule would generally not require a financial

[533] SBREFA Panel Report at 46.

[534] *Id.*

[535] *Id.*

[536] SBREFA Outline at 34–35.

[537] *See* part VI below.

[538] *See generally* Fed. Fin. Insts. Examination Council, *The Home Mortgage Disclosure Act, https://ffiec.cfpb.gov/* (last visited July 28, 2021).

institution to verify applicant-provided information, as discussed more fully in the section-by-section analysis of proposed § 1002.107(b) below, and has limited the discretionary data points to those that the Bureau believes would be most useful for the purposes of section 1071. In addition, the Bureau has considered the costs, including data quality scrubs, automation and training, that would be imposed by the collection and reporting of the statutory and discretionary data points; these are discussed in detail in part VII below. The Bureau has attempted to craft the collection and reporting requirements to be as clear and operationally manageable as possible, and requests comment on potential methods for increasing clarity and manageability.

In regard to concerns from SERs and other stakeholders about being required to collect applicants' protected demographic information for purposes of section 1071, the Bureau notes that several SERs reported collecting this kind of information currently (because they are CDFIs, or because they are participating in certain SBA or similar loan guarantee programs). In addition, the Bureau crafted the proposed rule to provide flexibility for financial institutions in the collection and reporting of this information. The Bureau is also not proposing an exemption for small financial institutions from reporting the discretionary data points, as suggested by some SERs and commenters. As explained in the section-by-section analysis of proposed § 1002.105(b) above, certain institutions with limited small business loan originations would be exempt from 1071 collection and reporting obligations. Furthermore, the Bureau is concerned that the usefulness of the data collected would be reduced if the data set is incomplete for some financial institutions. Finally, the Bureau is not proposing at this time to establish a Federal collection system for protected demographic or other information for use with 1071 reporting that would avoid the need for financial institutions to request and store this information about applicants, as suggested by several SERs.

The Bureau seeks comment on its proposed approach to the collection and reporting of the 1071 data points, including the specific requests for input above and in the section-by-section analysis of each of the proposed data points below.

Proposed Rule—Other Discretionary Data Points Considered But Not Proposed

As mentioned above, SERs and other stakeholders suggested some additional data points for the Bureau's consideration, and the Bureau considered others in the development of this proposed rule. Because of the operational complexities likely to be posed by each of these potential data points, as well as the reasons explained below, the Bureau has chosen not to propose to include any of the following data points in the 1071 rule. Nonetheless, the Bureau seeks comment on whether the following potential data points or any others would further the purposes of section 1071 and thus should be considered for inclusion in the final rule.

- *Type of business/entity structure (sole proprietorship, C-corp, LLC, partnership, etc.).* This information could be useful in providing context to the race, sex, and ethnicity data regarding applicants' principal owners. However, the Bureau believes that collecting the number of principal owners, as proposed in § 1002.107(a)(21), would better serve this purpose.
- *Credit score.* Collecting credit score and other credit information could be particularly useful for the fair lending purpose of section 1071. However, because of the different types of scores and different situations in which a financial institution would or would not access scores, the Bureau believes that this data point could be quite complicated and involve complex sub-fields, which could pose operational difficulties for financial institutions in collecting and reporting this information. These complexities could also make it difficult for data users to understand and interpret credit score data.
- *Credit reporting information, including whether credit information was accessed.* This data point could also be complicated and involve complex sub-fields, making it difficult for financial institutions to collect and report. As with credit score, these complexities could also make it difficult for data users to understand and interpret these data. In addition, it is not clear that this information would be useful without also collecting credit score.
- *Percentage ownership of each principal owner* and *percentage ownership by women and by minorities.* This information could be useful in providing context to the ethnicity, race, and sex data regarding applicants' principal owners. However, the Bureau is concerned that requesting this type of percentage data could be confusing to applicants and could result in inconsistent responses across applicants and institutions. The Bureau believes that collecting the number of principal owners, as proposed in § 1002.107(a)(21), would better serve this same purpose.
- *Whether the applicant has an existing relationship with the financial institution and the nature of that relationship.* This information could provide additional context for a financial institution's credit decision, and thus could be useful for both of section 1071's statutory purposes. However, the Bureau believes that the usefulness of the data collected may not justify the additional operational complexity of identifying and tracking such relationships for reporting.
- *Customer number, and/or unique (but anonymous) identification number for applicants or associated persons for tracking of multiple applications.* This information could be useful to track multiple applications by a single small business within a particular financial institution, whether submitted at one time or over the course of the year. However, the Bureau believes that the potential difficulties posed by requiring the reporting of this information—particularly for applications that have been withdrawn or abandoned—would not be warranted in light of the utility of the data.

107(a)(1) Unique Identifier

Background

ECOA section 704B(e)(2)(A) requires financial institutions to collect and report ''the number of the application . . . .'' Regulation C includes a similar reporting requirement for a universal loan identifier (ULI),[539] though some insured credit unions and depositories whose lending activity falls below applicable thresholds are partially exempt and only need to report a non-universal loan identifier (NULI).[540] Both the ULI and the NULI use only alphanumeric characters, and do not allow use of identifying information about the applicant or borrower in the identifier. The ULI is ''unique'' in the national HMDA reporting market because it uses a unique legal entity identifier (LEI) for the reporting institution and then the identifier is required to be unique within that

[539] 12 CFR 1003.4(a)(1)(i).

[540] 12 CFR 1003.3(d)(5).

institution.[541] The ULI must be no more than 45 characters and the NULI must be no more than 22 characters.[542]

SBREFA Proposals Under Consideration and Feedback Received

The Bureau stated in the SBREFA Outline that it was considering proposing that financial institutions report an alphanumeric application or loan number of no more than 45 characters that is unique, within the financial institution, to the referenced extension (or requested extension) of credit and that remains uniform through the application and origination stages of the process.[543] The financial institution would assign this number to an application, and the number would be reported as the application number if the credit applied for was not originated. The same number would be reported as the loan number if the credit applied for was originated. The application/loan number would not include any identifying information about the applicant. The Bureau stated that it was considering proposing a structure for the method of assigning and reporting the application/loan number under section 1071 to follow HMDA/Regulation C formatting and other requirements, which might reduce initial software development costs.

SERs reported varied practices with respect to assigning application and loan numbers.[544] Some SERs stated they do not assign application numbers; some of those SERs indicated, however, that they do assign loan numbers at or before origination. Two SERs reported tracking applications and loans using an identification number assigned to the customer. One SER expressed concern about reporting actual loan numbers to the Bureau due to potential identity theft, and requested that the Bureau permit financial institutions to generate a new application/loan number specifically for 1071 reporting purposes. One SER stated that if an applicant requests more than one type of credit product, a separate application/loan number is assigned to each product request, while other SERs indicated they use a single application number even if multiple products are requested.

The SBREFA Panel recommended that in the NPRM the Bureau consider proposing to permit financial institutions to report ''dummy'' application/loan numbers assigned specifically for 1071 reporting purposes, rather than the numbers they use internally.[545]

Feedback from other stakeholders echoed many of the SERs' concerns, making clear that many lenders do not assign numbers at the application stage and others assign them at various points in the process. One commenter explained that being required to assign an application number early would disrupt its procedures. Another commenter stated that the Bureau should provide flexibility in this data point to account for the wide range of practices.

Proposed Rule

The Bureau is proposing to require that financial institutions report an alphanumeric identifier starting with the LEI of the financial institution. This unique alphanumeric identifier would be required to be unique within the financial institution to the specific covered application, and would be required to be usable to identify and retrieve the specific file corresponding to the application for or extension of credit. The Bureau is also proposing commentary with additional details, as discussed below.

This proposed unique identifier requirement closely follows the SBREFA Outline approach for this data point, with certain adjustments and clarifications. First, the Bureau has chosen to propose the more precise term of ''unique identifier,'' instead of ''application/loan number,'' which was the term used in the SBREFA Outline. In addition, the Bureau had stated that its approach in the SBREFA Outline would follow Regulation C formatting and other requirements, but did not explicitly discuss the use of ''dummy'' numbers, as is done with HMDA.[546] For clarity, the Bureau is including language in proposed comment 107(a)(1)–1 that would explain that the identifier does not have to be the number that the financial institution uses for the application internally. Proposed comment 107(a)(1)–1 would also provide the formatting requirements for the unique identifier. The Bureau is proposing an identifier of 45 characters or fewer, as is currently required for HMDA.

The Bureau notes that the SBREFA Outline language could be read to suggest that the financial institution must assign a number to an application and then keep that number uniform throughout its subsequent processing of the application; this is not what was intended. The Bureau is making clear in the proposal that the unique identifier would not need to stay ''uniform'' throughout the application and subsequent processing. Proposed comment 107(a)(1)–1 would explain that the financial institution may assign the unique identifier at any time prior to reporting the application. Proposed comment 107(a)(1)–1 would also explain that refinancings or applications for refinancing must be assigned a different identifier than the transaction that is being refinanced.

Proposed comment 107(a)(1)–2 would make clear that the unique identifier must not include any directly identifying information regarding the applicant or persons (natural or legal) associated with the applicant. The Bureau is aware that internal identification numbers assigned by the financial institution to the application or applicant could be considered directly or indirectly identifying information, and requests comment on this issue. The Bureau also notes that, as discussed in part VI.C.6.i, due to privacy risks the Bureau is proposing to not publish the unique identifier data field in unmodified form; the Bureau is seeking comment on potential modifications to or deletion of this data field in the published application-level 1071 data.

Proposed comment 107(a)(1)–2 would also cross-reference proposed § 1002.111(c) and related commentary, which prohibit any personally identifiable information concerning any individual who is, or is connected with, an applicant, in records retained under proposed § 1002.111.

As stated above, the Bureau is proposing to require that the unique identifier begin with the financial institution's LEI; this requirement was not stated in the SBREFA Outline. Pursuant to proposed § 1002.109(b)(1)(vi), any covered financial institution that does not currently use an LEI would be required to obtain and maintain an LEI in order to identify itself when reporting the 1071 data. Including the financial institution's LEI in the unique identifiers that it assigns to its applications should not cause extra operational difficulty once the programming to do so has been

[541] 12 CFR 1003.4(a)(1)(i)(A), (B)(2). The NULI is only required to be unique within the annual loan/application register in which the covered loan or application is included. 12 CFR 1003.3(d)(5)(ii).

[542] The ULI length limit is included in the Bureau's yearly Filing Instructions Guide. *See* Bureau of Consumer Fin. Prot., *Filing instructions guide for HMDA Data collected in 2021* (2021), *https://s3.amazonaws.com/cfpb-hmda-public/prod/help/2021-hmda-fig.pdf.* The limit for the NULI is in Regulation C § 1003.3(d)(5).

[543] SBREFA Outline at 26.

[544] SBREFA Panel Report at 26–27.

[545] *Id.* at 45.

[546] SBREFA Outline at 26.

implemented. The Bureau believes that including the LEI will increase the specificity and usefulness of the identifier and the record it identifies. Although a ''check digit'' is required for the HMDA ULI, the Bureau is not proposing to require its use in the 1071 unique identifier. The Bureau believes that, based on its current expectations for a 1071 reporting platform, a check digit would be unnecessary.

The Bureau's proposal is intended to avoid the potential problems identified by SERs during the SBREFA process. The method proposed would accommodate different institutions' numbering systems because the unique identifier can be created separately from that internal system. The Bureau's proposed approach would also alleviate the identity theft concerns raised with respect to reporting actual loan numbers, though the Bureau is unlikely to release the unique identifier data reported to the Bureau publicly in any case. In regard to the issue of requests by the same applicant for more than one credit product at the same time, the Bureau proposes to treat those as separate applications. See the section-by-section analysis of proposed § 1002.103 above.

The Bureau seeks comment on its proposed approach to the unique identifier data point. In addition, the Bureau requests comment on the use of the LEI in the unique identifier and the possible use of a check digit.

107(a)(2) Application Date

Background

ECOA section 704B(e)(2)(A) requires financial institutions to collect and report the ''date on which the application was received.''

SBREFA Proposal Under Consideration and Feedback Received

In the SBREFA Outline, the Bureau stated it was considering proposing that financial institutions report the application date using either (i) the date shown on a paper or electronic application form; or (ii) the day on which a credit request becomes an ''application.'' [547] The Bureau considered proposing that application date be reported with a day, month, and year. The Bureau also considered proposing that financial institutions have a grace period of several days on either side of the date reported to reduce the compliance burden of pinpointing an exact date on which an application was received.

Most SERs stated that application date would not be difficult to report, though some suggested different triggers for the reporting of application date.[548] This feedback overlapped with feedback on the definition of an application. Several SERs suggested the date an application is completed and submitted for underwriting review should be the triggering date. Several other SERs expressed support for reporting the date based on when a credit memorandum is generated. One SER suggested that each financial institution be permitted to develop its own process for reporting application date, so long as it is done consistently. Another SER expressed concern with reporting application date as a general matter, explaining that a date is not currently recorded in their system as a matter of practice. Instead of application date, that SER suggested that financial institutions report the date they make a decision on the loan. Several SERs were strongly in favor of the Bureau providing a grace period of several days on either side of the date reported to reduce compliance burden.

Other stakeholders to comment on this data point were generally in favor of the proposal under consideration, and particularly the grace period, which they expressed would reduce the compliance burden of pinpointing an exact date. One stakeholder suggested a 7-day grace period. One financial institution suggested that application date be assigned up through and including at closing in order to accommodate financing requests outside normal business hours.

The SBREFA Panel recommended that the Bureau seek comment on how best to define ''application date'' in light of how it decides to propose defining an ''application.'' [549]

Proposed Rule

The Bureau is proposing to require reporting of application date in § 1002.107(a)(2) as the date the covered application was received by the financial institution or the date on a paper or electronic application form. Proposed § 1002.107(a)(2) is consistent with the Bureau's proposal under consideration in the SBREFA Outline, with revised language for clarity. Proposed comments 107(a)(2)–1 and –2 would clarify the need for a financial institution to take a consistent approach when reporting application date, and provide guidance on how to report application date for indirect applications. In light of SER and other stakeholder feedback [550] supportive of permitting a grace period for reporting the date of application, the Bureau is proposing a safe harbor in § 1002.112(c)(4), which would provide that a financial institution does not violate proposed subpart B if it reports on its small business lending application register an application date that is within three calendar days of the actual application date pursuant to proposed § 1002.107(a)(2).

The Bureau seeks comment on its proposed approach to collecting application date in § 1002.107(a)(2) and associated commentary. As recommended by the SBREFA Panel, the Bureau also seeks comment on how best to define this data point in light of the Bureau's proposed definition of ''covered application'' in § 1002.103.

107(a)(3) Application Method

ECOA section 704B(e)(2)(H) authorizes the Bureau to require financial institutions to compile and maintain ''any additional data that the Bureau determines would aid in fulfilling the purposes of [section 1071].'' The Bureau believes that application method data will aid in fulfilling the purposes of section 1071, as explained below.

The Bureau did not address the method of application as a potential data point under consideration in the SBREFA Outline. However, during the SBREFA process, one CDFI SER suggested collecting information regarding the way an application was taken (in person, by phone, or online) in order to monitor for possible discouragement of applicants.[551] Relatedly, several SERs that took applications for credit primarily or entirely online asserted that such channels were less likely to result in discrimination and more likely to increase access to credit to women-owned and minority-owned small businesses.

In light of this feedback during the SBREFA process, pursuant to its authority under ECOA section 704B(e)(2)(H), and for the reasons set forth below, the Bureau is proposing to require financial institutions to collect and report application method. Proposed § 1002.107(a)(3) would define this data point as the means by which the applicant submitted the covered application directly or indirectly to the financial institution. The Bureau is also proposing commentary to accompany proposed § 1002.107(a)(3).

[547] *Id.*

[548] SBREFA Panel Report at 27.

[549] *Id.* at 45.

[550] SER feedback primarily directed at how to define an application under section 1071, rather than the date reported for that application, are discussed in connection with the section-by-section analysis of proposed § 1002.103(a) above.

[551] SBREFA Panel Report at 30.

The Bureau believes that data on application method would improve the market's understanding of how applicants apply for credit which, in turn, would facilitate fair lending enforcement, including helping determine whether certain application methods are more or less likely to be associated with violations of fair lending laws. This proposed data field would also permit comparisons across financial institutions for a given application method. In addition, data on application method supports 1071's statutory purposes by assisting with an understanding of the business and community development needs of a particular geographic region. For instance, application method may help users of 1071 data analyze the extent to which financial institutions may be providing access to credit online or by telephone in ''credit deserts'' where financial institutions do not have branch operations.

The Bureau also believes that collecting data on application method will aid in analysis of multiple 1071 data points collected and reported by financial institutions, including the ethnicity, race, and sex of applicants' principal owners. First, these data will assist the Bureau and other data users in identifying whether applicants are more or less likely to provide this (and other) 1071 information in different application channels. This information may also assist in determining whether a financial institution has procedures to collect applicant-provided data at a time and in a manner that is reasonably designed to obtain a response, as would be required by proposed § 1002.107(c)(1).

Finally, data on application method would assist in analyzing data reported under, and assessing compliance with, proposed § 1002.107(a)(20), which requires financial institutions to collect principal owners' ethnicity and race via visual observation or surname in certain circumstances. Having application method reporting will allow the Bureau and other data users to determine, for example, which applications could be subject to data collection via visual observation or surname (because the financial institution met with the applicant in person) and, together with information reported under proposed § 1002.107(a)(20), which of those applications did and did not have information collected that way.

Proposed comment 107(a)(3)–1 would clarify that a financial institution complies with proposed § 1002.107(a)(3) by reporting the means by which the applicant submitted the application from one of the following options: in-person, telephone, online, or mail. Proposed comment 107(a)(3)–1 would explain how financial institutions are to choose which application method to report, including via a ''waterfall approach'' when they have contact with an applicant in multiple ways.

Proposed comment 107(a)(3)–1.i would provide that an financial institution reports the application method as ''in-person'' if the financial institution, or another party acting on the financial institution's behalf, meets with the applicant in person (for example, in a branch office, at the applicant's place of business, or via electronic media with a video component). Proposed comment 107(a)(3)–1.ii would provide that a financial institution reports the application method as ''telephone'' if the financial institution, or another party acting on the financial institution's behalf, did not meet with the applicant in person as described in proposed comment 1002.107(a)(3)–1.i but communicated with the applicant by telephone or via electronic media without a video component.

Proposed comment 107(a)(3)–1.iii would provide that a financial institution reports the application method as ''online'' if it, or another party acting on the financial institution's behalf, did not meet with the applicant in person and did not communicate with the applicant by telephone as described in proposed comments 1002.107(a)(3)–1.i and ii but communicated with the applicant through an online application, electronic mail, text message, and/or some other form of online communication. Proposed comment 107(a)(3)–1.iv would provide that a financial institution reports the application method as ''mail'' if the financial institution, or another party acting on the financial institution's behalf, did not meet with the applicant in person and did not communicate with the applicant by telephone, as described in proposed comments 1002.107(a)(3)–1.i and ii, but communicated with the applicant in writing via United States mail, courier or overnight service, or hand-delivery (including hand-delivery of documents via an overnight drop box or at a teller window).

Proposed comment 107(a)(3)–2 would provide guidance on what application method a financial institution would report for interactions with applicants both online and by mail. In short, a financial institution would report application method based on the method by which it, or another party acting on its behalf, requested the ethnicity, race, and sex of the applicant's principal owners pursuant to proposed § 1002.107(a)(20). Proposed comment 107(a)(3)–2 also would provide separate examples of when the application method should be reported as ''online'' and ''mail.''

The Bureau seeks comment on its proposed approach to this data point.

107(a)(4) Application Recipient

ECOA section 704B(e)(2)(H) authorizes the Bureau to require financial institutions to compile and maintain ''any additional data that the Bureau determines would aid in fulfilling the purposes of [section 1071].'' Although the Bureau did not address application recipient as a potential data point under consideration in the SBREFA Outline, the Bureau believes that application recipient data would aid in fulfilling the purposes of section 1071, as explained below.

Financial institutions employ a wide variety of lending models in extending credit to small businesses. During the SBREFA process, the Bureau explored section 1071's requirement to collect and report certain data for any ''application to a financial institution for credit,'' which could be read as applying to more than one financial institution when an intermediary provides the application to another financial institution that takes final action on the application.[552] See the section-by-section analysis of proposed § 1002.109(a)(3) below for a discussion of proposed reporting obligations where multiple financial institutions are involved in a covered credit transaction. Financial institutions, of course, may receive applications for credit directly from small businesses—depending on the institution, applications may be submitted online, by telephone, by mail, or in person at a branch location, the applicant's place of business, or some other place. In addition, some financial institutions may receive applications routed to them through third parties, such as brokers or vehicle or equipment dealers. Some financial institutions issue credit cards branded for particular retailers, for which applications are taken in person at the retailer's store locations. Some brokers and dealers may send applications to a single financial institution, while others may send them to multiple financial institutions at the same time. In these types of application scenarios involving third parties, the financial institution may not directly interact with the

[552] ECOA section 704B(b).

applicant at all during the application process.

In the SBREFA Outline, the Bureau noted the wide array of small business lending models operating today. The Bureau noted that certain section 1071 requirements might apply to intermediaries in the application chain.[553] As discussed in the section-by-section analysis of proposed § 1002.109(a)(3) below, several SERs voiced support for aligning reporting requirements for financial institutions that are not the lender of record with the approach taken for HMDA reporting in the Bureau's Regulation C. The Bureau did not receive feedback from SERs on whether data concerning the existence of intermediaries should be collected. Other stakeholders did urge the Bureau, however, to provide clear rules for lenders that work with partners, including when lenders should, and need not, collect 1071 data. Stakeholders also urged the Bureau to provide clear rules that would work for a broad array of business models, including lenders working with partners and agents.

The Bureau believes that information regarding how an application is received would enhance small business lending data and further the purposes of section 1071. Pursuant to its authority under ECOA section 704B(e)(2)H), the Bureau is thus proposing § 1002.107(a)(4), which would require financial institutions to collect and report the application recipient, meaning whether the applicant submitted the covered application directly to the financial institution or its affiliate, or whether the applicant submitted the covered application indirectly to the financial institution via a third party. Proposed comment 107(a)(4)–1 would clarify that if a financial institution is reporting actions taken by its agent consistent with proposed comment 109(a)(3)–3, then the agent is considered the financial institution for the purposes of proposed § 1002.107(a)(4).

The Bureau believes that collecting data on application recipient, in combination with application method, as discussed above, would improve the market's understanding of how small businesses interact with financial institutions when applying for credit which, in turn, would facilitate fair lending analysis, including identifying risks in small business lending. Information about application method and whether the application was submitted directly or indirectly also would promote the community and business development purposes of the statute by improving the public's understanding of the structure of small business lending originations across the market, the methods by which credit is originated for particular groups or underserved markets, and trends over time (for example, to the extent applicant preferences shift from in-person to online interactions). It will also be helpful for the Bureau and data users to know the relationship between the covered financial institution and the applicant in the context of certain other collected and reported data.

The Bureau also believes that collecting and reporting information on the application recipient may facilitate fair lending analysis because particular business models may provide more or less reliable information with respect to the ethnicity, race, and sex of the principal owners of the applicant. In addition, the Bureau believes that collecting and reporting information on the application recipient may assist with an understanding of the business and community development needs of an area or applicant. For instance, the proposed collection of application recipient may help users of 1071 data understand whether financial institutions making credit decisions are directly interacting with the applicant and/or generally operate in the same community as the applicant. Finally, the Bureau expects that financial institutions know and track how they receive applications for credit from small businesses and thus does not believe that this data point should be difficult for financial institutions to collect and report.

The Bureau seeks comment on its proposed approach to this data point.

107(a)(5) Credit Type

Background

Section 1071 requires financial institutions to collect and report ''the type and purpose of the loan or other credit being applied for.'' [554] (The credit purpose data point is addressed in proposed § 1002.107(a)(6).) For HMDA reporting, Regulation C requires numerous data points that indicate the type of credit applied for or originated: the type of guarantees used; lien order; loan term; the presence of nontraditional contract terms including balloon, interest only, and negative amortization payments; variable rate information; open-end status; and reverse mortgage status.[555] Section 1071 provides no additional information or details regarding what aspects of credit type should be collected and reported.

SBREFA Proposals Under Consideration and Feedback Received

In the SBREFA Outline, the Bureau stated it was considering proposing that financial institutions report the loan/credit type data point via three sub-components: (1) Type of Loan Product (chosen from a specified list); (2) Type of Guarantee (chosen from a specified list); and (3) Loan Term (in months, or using ''Not Applicable'' for products that do not have a loan term and for applications that did not specify a loan term). The SBREFA Outline included lists of types of loan product and types of guarantees.[556]

The Bureau explained in the SBREFA Outline that a separate category for the presence of a guarantee was included in recognition of the fact that a guaranteed loan is often made as a counteroffer for either a requested loan by the applicant or because the applicant does not qualify for a conventional loan.[557] Having guarantee status captured as a feature of loan type therefore would provide useful information. The Bureau also noted that some borrowers specifically request a government guaranteed loan program and/or receive a loan from a financial institution that only participates in such a program.[558]

For reporting when an application requests more than one type of loan product, the Bureau stated in the SBREFA Outline that it was considering whether to propose that (1) financial institutions choose up to three items from the subcomponent lists for the Loan Type data point if there is only one application and multiple products/guarantees/terms were asked for; or (2) financial institutions report separate applications/originations for each loan type requested or originated. The Bureau explained that financial institutions would be able to choose more than one guarantee for originated or approved but not accepted credit. For loan product and loan term, however, financial institutions would report only one of each subcomponent on originated credit or credit approved but not accepted.[559]

A number of SERs requested certain products be added to the ''product type'' list; this feedback generally aligned with feedback regarding product coverage (see the section-by-section analysis of proposed § 1002.104 above). Two SERs suggested that line increases should be

[553] SBREFA Outline at 13.

[554] ECOA section 704B(e)(2)(B).

[555] Regulation C § 1003.4(a)(2), (14), (25), (27), (28), (37), and (38).

[556] SBREFA Outline at 26–27.

[557] *Id.*

[558] *Id.*

[559] *Id.* at 27.

excluded. Some SERs requested that the Bureau permit multiple types of guarantees to be selected for a single application, and one SER suggested that FHA guarantees be added to the guarantee list. One SER explained that government guarantees and personal guarantees are different—the government guarantee being a credit enhancement and a personal guarantee being a form of collateral.

The SBREFA Panel recommended that the Bureau consider modifying the product type and guarantee lists in accordance with the various suggestions made by SERs. The Panel also recommended that the Bureau seek comment on how financial institutions currently handle increases in lines of credit and how best to require reporting of this data point for multiple lines of credit within the same account.[560]

The Bureau also received feedback from other stakeholders regarding this data point. A community group commenter stated that the three data fields making up this data point are appropriate choices because each is necessary separately and in combination to help determine whether lenders are responding to the needs for credit by offering affordable and sustainable products to traditionally underserved small businesses. Commenters requesting that additional products be covered by the rule, such as MCAs, likewise said those products would need to be added to the loan product list. Another commenter stated that the Bureau should also expand the number of guarantees that a financial institution can select because creditors will sometimes stack four or five guarantees on a single loan product.

One commenter stated that the ''type and purpose of the financing'' are fluid in the application process, and the Bureau should make it clear that high-level, general, or categorical information is sufficient for these data points. Other commenters appreciated the inclusion of ''other,'' ''unknown,'' and ''other/unknown'' in the field lists to facilitate compliance. One commenter asked that the Bureau provide clear guidance on how this data point should be reported, and another stated that reporting this data point should not be costly if it is defined simply and left unchanged.

*Treatment of multiple products requested at the same time.* Regarding how a single request for multiple loan/credit products should be reported, some commenters supported reporting separate applications while others supported requiring reporting as a single application. One commenter suggested that the Bureau should accommodate both approaches. Another commenter remarked that if a business is applying for multiple products, the basic information is going to be the same, the only difference would be which product is funded. This same commenter suggested that if multiple applications are reported, that will overinflate the data points as the business does not have three separate applications, but only one application for different products. This commenter further pointed out that there are instances where a business is only applying for a loan but ends up liking the terms of a line of credit, and asked whether that change in decision would become a new application.

Proposed Rule

The Bureau is proposing in § 1002.107(a)(5) to require that financial institutions collect and report the following information regarding the type of credit applied for or originated: (i) The credit product; (ii) The type or types of guarantees that were obtained for an extension of credit, or that would have been obtained if the covered credit transaction were originated; and (iii) The length of the loan term, in months, if applicable. These aspects of credit type are discussed in turn below. This proposal is consistent with the approach presented in the SBREFA Outline, and would require the financial institution to choose the credit product and guarantee(s) from a specified list. (These lists are provided in the commentary accompanying proposed § 1002.107(a)(5).) The lists include choices for ''Other'' and ''Not provided by applicant and otherwise undetermined,'' as appropriate, to facilitate compliance. Based on the feedback from SERs and other stakeholders, and consistent with the SBREFA Panel's recommendation to consider modifying the product type and guarantee lists in accordance with the suggestions made by SERs, the Bureau has updated the lists to reflect additional credit products and types of guarantees. The Bureau is also proposing to use the term ''credit type'' for this data point, rather than the SBREFA Outline term ''loan/credit type,'' for clarity and consistency with terminology used elsewhere in the proposal.

The Bureau believes that it is reasonable to interpret the statutory term ''credit type'' to comprise the proposed three data fields, because they are critical to understanding the nature of small business credit applied for and provided, as explained below. For the reasons discussed herein, the Bureau believes that the subcategories of credit product (including collateral), guarantee type, and loan term would aid in fulfilling the purposes of section 1071. Financial institutions generally have all of the information required for this data point when they process applications (and the reporting regime would be sufficiently flexible when they do not), so the Bureau does not believe there is anything in this approach that would impose particular operational difficulty. Additionally, the Bureau believes it is reasonable to interpret type of credit ''applied for'' to include the type of credit actually originated when an application results in an extension of credit.

The Bureau seeks comment on its proposed approach to the credit type data point, including the lists of products and guarantees proposed and the other specific requests for input below.

*Credit product.* The first data field the Bureau is proposing to include in the credit type data point is the *credit product* (*i.e.,* a commonly understood category of small business lending like term loans or lines of credit) which the Bureau considers to be an integral part of the statutory requirement to collect credit type. The Bureau believes information about the various products sought by applicants would further the purposes of section 1071 by demonstrating, for example, how small businesses of different sizes or in different sectors choose to pursue, or ultimately access, different forms of credit.

The Bureau distinguishes between secured and unsecured term loans and lines of credit in its list of credit products because it believes that whether a term loan or line of credit is collateralized can have such a significant effect on things like approval rates and pricing that secured and unsecured products fundamentally differ in kind. For this reason, the Bureau believes that including information on the use of collateral in the credit product data field will help data users to avoid inaccurate interpretations of 1071 data. The Bureau believes that whether a loan is secured or unsecured will be part of an application or loan file and, as a result, should not be operationally difficult to report once a financial institution's 1071 compliance system is set up.

Proposed comment 107(a)(5)–1 would present the instructions for collecting and reporting credit product and the proposed list of credit products from which financial institutions would select. Proposed comment 107(a)(5)–1 would explain that a financial

[560] SBREFA Panel Report at 45.

institution complies with § 1002.107(a)(5)(i) by selecting the credit product requested from the list provided in the comment. It would also explain that if an applicant requests more than one credit product, the financial institution reports each credit product requested as a separate application.

The issue of how to collect and report multiple products applied for at the same time affects several data points, but is most salient for credit type. The Bureau believes that requiring a separate application to be reported for each credit product requested would yield more complete and useful data, and that a financial institution should not experience operational difficulties in copying the relevant information, identical for most data points, to separate lines in the small business lending application register. This issue is discussed more fully in the section-by-section analysis of proposed § 1002.103(a), which also addresses the Bureau's proposed approach to multiple lines of credit within the same account.

The Bureau intends the list of credit products provided in proposed comment 107(a)(5)–1 to align with the most common types of credit products in small business lending. As explained above, the list for credit product included in the SBREFA Outline has been amended based on SER and stakeholder input, as well as other considerations. Specifically, ''Merchant cash advance'' and ''Other sales-based financing transaction'' have been added to the list to correspond with their inclusion as covered credit transactions under proposed § 1002.104. See the section-by-section analysis of proposed § 1002.104 above for a more complete discussion of products covered by and excluded from the Bureau's proposal. Proposed comment 107(a)(5)–6 would explain when ''other sales-based financing transaction'' is used for reporting.

Proposed comment 107(a)(5)–1 would also explain that if the credit product for an application does not appear on the list of products provided, the financial institution selects ''other'' as the credit product and reports the specific product via free-form text. The Bureau believes that allowing financial institutions to choose ''other'' when the credit product for the application does not appear on the provided list would facilitate compliance. In addition, collecting this information on ''other'' credit products would assist the Bureau in monitoring product trends and key developments in the small business lending market, which the Bureau could use to inform any future iterations of the list.

Proposed comment 107(a)(5)–2 would explain that, pursuant to proposed § 1002.107(c)(1), a financial institution is required to maintain procedures reasonably designed to collect applicant-provided data, which includes credit product. However, if a financial institution is nonetheless unable to collect or otherwise determine credit product information because the applicant does not indicate what credit product it seeks and the application is denied, withdrawn, or closed for incompleteness before a credit product is identified, the proposed comment would explain that the financial institution reports that the credit product is ''not provided by applicant and otherwise undetermined.'' This option is similar to the ''unknown'' response under consideration during SBREFA, but has been revised to more accurately reflect the situations in which the response would be appropriate. The Bureau believes that permitting use of this response would facilitate compliance and enhance the quality of data collected. As discussed above, commenting stakeholders supported the flexibility afforded by this kind of response.

Proposed comment 107(a)(5)–3 would explain how a financial institution reports a transaction that involves a counteroffer. The comment would state that if a financial institution presents a counteroffer for a different credit product than the product the applicant had initially requested, and the applicant does not agree to proceed with the counteroffer, a financial institution reports the application for the original credit product as denied pursuant to proposed § 1002.107(a)(9). If the applicant agrees to proceed with consideration of the financial institution's counteroffer, the financial institution reports the disposition of the application based on the credit product that was offered, and does not report the original credit product applied for. The Bureau believes that, in the complex circumstances created by counteroffers, the meaning of the type of credit ''applied for'' is ambiguous, and it is reasonable to interpret the credit product ''applied for'' to mean the credit product considered via the applicant's response to the counteroffer. For a discussion of the Bureau's proposed treatment of counteroffers more generally, see the section-by-section analysis of proposed § 1002.107(a)(9) below.

The Bureau notes that, under its proposal, line increases would be reportable so that the small business lending market can be tracked accurately. See the section-by-section analysis of proposed § 1002.103(a) above for additional details. However, the Bureau is not proposing that line increases be included as a separate item in the credit product list.

The Bureau seeks comment on its proposed approach to this data field, including the appropriateness and usefulness of the products included in the list, whether there are other products that should be added, and the proposed treatment of counteroffers. The Bureau also seeks comment on how financial institutions currently handle increases in lines of credit and whether a line increase should be considered a credit product, and on whether an overdraft line of credit should be considered a product separate from a line of credit and thus added to the product list.

*Type of guarantee.* The second data field the Bureau is proposing to include in the credit type data point is *guarantee.* The Bureau considers the guarantee obtained for an extension of credit to be part of the credit ''type'' because it is fundamental to the nature of the transaction in that it meaningfully impacts terms such as interest rates, such that guarantee information could help to explain potential disparities in outcomes and reduce inaccurate conclusions, aiding in fulfilling the fair lending purpose of section 1071. Indeed, in common parlance, small business credit transactions are often referred to using the name of the guarantee (*e.g.,* ''a 7(a) loan,'' referring to the SBA 7(a) guarantee). Because various types of guarantees are available for different credit products, the Bureau believes that guarantee type should constitute a separate data field within the credit type data point, so that data users can conduct separate analyses with respect to credit product and guarantees, and to avoid excessive complexity in the credit product data field. Information on the distribution of government loan guarantees (such as those provided in SBA programs) across different geographic areas and applicant groups should allow a better understanding of how those programs function on the ground, aiding in fulfilling the business and community development purpose of section 1071. As with collateral, information on guarantees is generally a part of an application or loan file and should not be operationally difficult to report once a financial institution's 1071 compliance system is set up.

Proposed comment 107(a)(5)–4 would present the instructions for collecting and reporting type of guarantee and the proposed list of guarantees from which financial institutions would select.

Proposed comment 107(a)(5)–4 would explain that a financial institution complies with § 1002.107(a)(5)(ii) by selecting the type or types of guarantee(s) obtained for an originated covered credit transaction, or that would have been obtained if the covered credit transaction were originated, from the list provided in the comment.

The Bureau intends the list of guarantee types provided in proposed comment 107(a)(5)–4 to align with the most common types of guarantees used in small business lending. As explained above, the list for guarantee type included in the SBREFA Outline has been amended based on SER and stakeholder input. Specifically, ''FHA insurance'' and ''Bureau of Indian Affairs guarantee,'' which the Bureau believes are often used with small business credit, have been added.

Proposed comment 107(a)(5)–4 would also explain that the financial institution may select, if applicable, up to a maximum of five guarantees for a single application or transaction. In the SBREFA Outline, the Bureau stated that it was considering allowing financial institutions to report more than one guarantee for an application or originated credit.[561] The Bureau understands that small business credit may have more than one guarantee, such as an SBA guarantee and a personal guarantee, and believes that more complete information can be collected by requiring as many as five to be reported.

Proposed comment 107(a)(5)–4 would also explain that if the type of guarantee for an application or originated transaction does not appear on the list of guarantees provided, the financial institution selects ''other guarantee,'' and reports the type of guarantee as free-form text. As with credit product, the Bureau believes that allowing financial institutions to choose ''other'' when a guarantee for the application does not appear on the provided list will facilitate compliance. In addition, collecting this information on ''other'' guarantee types would assist the Bureau in monitoring trends in usage of other types of guarantees and key developments in the small business lending market, which the Bureau could use to inform any future iterations of the list.

Finally, proposed comment 107(a)(5)–4 would provide that if no guarantee is obtained or would have been obtained if the covered credit transaction were originated, the financial institution selects ''no guarantee.'' Because a small business credit transaction does not always involve use of a guarantee, the Bureau is not proposing to include ''not provided by applicant and otherwise undetermined'' as an option. If no guarantee is identified for an application, the financial institution would report ''no guarantee.''

In regard to the distinction one SER made between government and personal guarantees, the Bureau notes that the proposed rule would identify them as separate options within the data field, thereby allowing data users to analyze them independently.

The Bureau seeks comment on its proposed approach to this data field, including the appropriateness and usefulness of the items listed, and whether there are other guarantees that should be added. The Bureau also seeks comment on whether five is the appropriate upper limit for reporting guarantees.

*Loan term.* The third data field the Bureau is proposing to include in the credit type data point is the *loan term.* As with the consumer lending market, the pricing and sustainability of closed-end credit transactions for small businesses are associated with term length, and without awareness of the term of the loan, data users will have less of an understanding of the types of credit being made available to applicants. Credit with a one-month term may differ not just in degree but in kind from credit with a 60-month term. The Bureau thus believes that the length of the loan term is a fundamental attribute of the type of credit that applicants are seeking such that it should be treated as a separate data field within credit type. As with other elements of the credit type data point, loan term information would allow data users to reduce inaccurate conclusions or misinterpretations of the 1071 data, aiding in fulfilling both the fair lending and business and community development purposes of section 1071. Likewise, the loan term will be part of the application or loan file and should not be operationally difficult to report once a financial institution's 1071 compliance system is set up.

Proposed comment 107(a)(5)–5 would present the instructions for collecting and reporting loan term. Specifically, it would explain that a financial institution complies with proposed § 1002.107(a)(5)(iii) by reporting the number of months in the loan term for the covered credit transaction, and that the loan term is the number of months after which the legal obligation will mature or terminate. The comment would further explain how to measure the loan term and the possible use of rounding.

Proposed comment 107(a)(5)–5 would also make clear that if a credit product, such as a credit card, does not have a loan term, the financial institution reports loan term as ''not applicable.'' The financial institution also reports ''not applicable'' if the application is denied, withdrawn, or determined to be incomplete before a loan term has been identified. The Bureau believes that permitting the use of ''not applicable'' in these situations would facilitate compliance and aid in the collection of appropriate data. The Bureau believes that the proposed regulatory text and commentary described above would alleviate many of the concerns of the SERs and other commenting stakeholders regarding the credit type data point. The credit product and guarantee type lists have been updated using their input and continued Bureau consideration. Multiple types of guarantees would be permitted by the proposal, and FHA guarantees have been added to the list.

The Bureau believes the statutory term ''type . . . of the loan'' to be ambiguous, and reasonably interprets the term to include the credit product, any guarantee obtained, and the term of a closed-end loan because an accurate and useful record of the ''type'' of loan or credit would include those data fields. In the alternative, ECOA section 704B(e)(2)(H) authorizes the Bureau to require inclusion of ''any additional data that the Bureau determines would aid in fulfilling the purposes of [section 1071],'' and for the reasons discussed above, the Bureau has also determined that the subcategories of credit product (including collateral), guarantee type, and loan term would aid in fulfilling those purposes.

The Bureau seeks comment on its proposed approach to this data field.

### 107(a)(6) Credit Purpose

#### Background

Section 1071 requires financial institutions to collect and report ''the type and purpose of the loan or other credit being applied for.''[562] (The credit type data point is addressed in proposed § 1002.107(a)(5).)

#### SBREFA Proposals Under Consideration and Feedback Received

The Bureau stated in the SBREFA Outline that it was considering proposing that financial institutions report the loan/credit purpose data point by choosing one or more purposes from a specified list. In addition to several specific business purposes, the list included choices for ''Other'' or

[561] SBREFA Outline at 27.

[562] ECOA section 704B(e)(2)(B).

''Unknown'' to facilitate compliance. The Bureau also explained that it was considering proposing that financial institutions be allowed to choose up to three purposes when the applicant indicates more than one purpose.[563]

Some SERs stated that they collect information on loan/credit purpose, although the information they collect may be different from that in the loan/credit purpose list in the SBREFA Outline.[564] One SER did, however, suggest that the Bureau's purposes list was similar to their list. Some SERs made suggestions of additional loan/credit purposes to add to the list, including for inventory loans, agricultural loans, and contract financing. One SER requested that the Bureau clarify whether this data point is intended to capture the purpose of the loan or the type of collateral. Another SER recommended combining the categories of motor vehicle finance and equipment finance, explaining that certain financing can span both categories (such as for a truck and a trailer as a combined purchase). One of the SERs expressed concern about possible confusion regarding credit with multiple purposes, and another SER suggested that the Bureau provide clear instructions on this data point. Another SER suggested that the Bureau explain how a line of credit should be reported if there can be multiple lines for different purposes all within the same account.

The SBREFA Panel recommended that the Bureau consider modifying the loan/credit purpose lists in accordance with the various suggestions made by SERs.[565]

Like the SERs, the other stakeholders who provided feedback on the SBREFA Outline stated that they often collect loan purpose information from applicants, but that the specific loan purposes they use differ somewhat from those listed in the SBREFA Outline. Stakeholders supported the inclusion of ''other'' and ''unknown'' in the list of purposes, and one suggested that the Bureau add ''Not Applicable'' for products, such as credit cards, that do not have a specific purpose. As with the SERs, these stakeholders requested clarifications and several changes to the loan purposes list. One commenter stated that financial institutions should not have to present the entire list to applicants where a loan product's terms do not allow the loan to be used for one or more of the specified purposes. That same commenter suggested that financial institutions should be allowed to include additional purposes not on the list, and in the instance an applicant selects an additional purpose, the financial institution would include it as ''other'' unless the selected purpose squarely fits within, or is a subset of, a purpose specified on the Bureau's list.

Proposed Rule

The Bureau is proposing in § 1002.107(a)(6) to require that financial institutions collect and report the purpose or purposes of the credit applied for or originated. The Bureau's proposed approach aligns with the SBREFA Outline approach, with certain adjustments. First, the Bureau is proposing to use the term ''credit purpose'' for this data point, rather than ''loan/credit purpose,'' for clarity and consistency with terminology used elsewhere in the proposal. In addition, the proposal would provide a more complete description of the purposes listed, which would clarify the relation between the purpose of the credit and the form of collateral used. The proposal also reflects other changes to the list of purposes presented in the SBREFA Outline, as explained below.

Proposed comment 107(a)(6)–1 would present instructions for collecting and reporting credit purpose and would provide the proposed list of credit purposes from which financial institutions would select.

The proposed list is similar to the list in the SBREFA Outline although, consistent with the SBREFA Panel's recommendation, the Bureau has made adjustments based on SERs' suggestions, as well as those of other stakeholders and its own further consideration. First, the items on the SBREFA list that described types of collateral, such as commercial real estate, have been updated to more clearly reflect that the financial institution is collecting and reporting the *purpose* of the loan, and not the form of collateral, though the form of collateral may be referred to in describing that purpose. In addition, the listed purposes involving real estate now differentiate between dwelling and non-dwelling real estate. The Bureau believes that this distinction would help in collecting more precise and useful data. To facilitate compliance the Bureau is also proposing to add ''not applicable'' to the purposes list for use when an application is for a credit product that generally has indeterminate or numerous potential purposes, such as a credit card. Proposed comment 107(a)(6)–5 would also explain the use of ''not applicable'' as a response. In addition to the changes described above, the proposed list of purposes also reflects small nonsubstantive edits for clarity.

Proposed comment 107(a)(6)–2 would explain that if the applicant indicates or the financial institution is otherwise aware of more than one purpose for the credit applied for or originated, the financial institution would report those purposes, up to a maximum of three, using the list provided, in any order it chooses. Since an applicant may have more than one purpose for a credit transaction, the Bureau believes it is appropriate to require collection and reporting of more than one credit purpose for this data point in that situation. The Bureau believes that having financial institutions report up to three purposes would provide useful and substantive data. The Bureau also believes that allowing financial institutions discretion as to the order of the purposes would facilitate compliance.

Proposed comment 107(a)(6)–3 would explain that if a purpose of the covered credit transaction does not appear on the list of purposes provided, the financial institution reports ''other'' as the credit purpose and reports the purpose as free-form text. The Bureau believes that allowing financial institutions to choose ''other'' when a credit purpose for the application does not appear on the provided list would facilitate compliance. In addition, collecting this information on ''other'' credit purposes would assist the Bureau in monitoring trends in this area and key developments in the small business lending market, which the Bureau could use to inform any future iterations of the list. For efficiency and to facilitate compliance, proposed comment 107(a)(6)–3 would also explain that if the application has more than one ''other'' purpose, the financial institution chooses the most significant ''other'' purpose, in its discretion, and reports that ''other'' purpose. The comment would then explain that a financial institution reports a maximum of three credit purposes, including any ''other'' purpose reported.

Proposed comment 107(a)(6)–4 would explain that, pursuant to proposed § 1002.107(c)(1), a financial institution shall maintain procedures reasonably designed to collect applicant-provided information, which includes credit purpose. However, if a financial institution is nonetheless unable to collect or determine credit purpose information, the financial institution would report that the credit purpose is ''not provided by applicant and otherwise undetermined.'' The Bureau believes that permitting use of this response would facilitate compliance

[563] SBREFA Outline at 28.

[564] SBREFA Panel Report at 27.

[565] *Id.* at 45.

and enhance the quality of data collected.

In order to facilitate compliance, the Bureau is also proposing comments 107(a)(6)–6 and –7. Proposed comment 107(a)(6)–6 would clarify that, as explained in proposed comment 104(b)–4, subpart B does not apply to an extension of credit that is secured by 1–4 individual dwelling units that the applicant or one or more of the applicant's principal owners does not, or will not, occupy. Proposed comment 107(a)(6)–7 would clarify the collection and reporting obligations of financial institutions with respect to the credit purpose data point, explaining that the financial institution would be permitted, but not required, to present the list of credit purposes provided in comment 107(a)(6)–1 to the applicant. Proposed comment 107(a)(6)–7 would further explain that the financial institution would also be permitted to ask about purposes not included on the list provided in proposed comment 107(a)(6)–1. Finally, proposed comment 107(a)(6)–7 would clarify that if an applicant chooses a purpose or purposes that are similar to purposes on the list provided, but uses different language, the financial institution would report the purpose or purposes from the list provided. The Bureau believes that minimizing use of free-form text here would improve the usefulness of the data collected and facilitate compliance.

The Bureau believes that, with the modifications discussed above, the list of credit purposes provided in proposed comment 107(a)(6)–1 appropriately aligns with the purposes of credit sought in the small business credit market. As explained above, the Bureau has clarified the distinction between the purpose of the credit and the collateral involved, as one SER suggested. In addition, the Bureau believes that the explanations and instructions in the proposed commentary accompanying § 1002.107(a)(6) should reduce any confusion as to how a financial institution would comply when an application involves multiple purposes, and in other situations. In regard to the SER comment about multiple lines of credit for different purposes within the same account, see the discussion of ''covered application'' in the section-by-section analysis of proposed § 1002.103(a) above.

The Bureau seeks comment on its proposed approach to the credit purpose data point. In addition, the Bureau seeks comment on whether there are any purposes that should be added to or modified on its proposed list including, in particular, on the potential usefulness of including ''agricultural credit'' and ''overdraft line of credit'' in the credit purposes list. Finally, the Bureau requests comment on whether further explanations or instructions with respect to this data point would facilitate compliance.

107(a)(7) Amount Applied For

Background

Section 1071 requires financial institutions to collect and report ''the amount of the credit or credit limit applied for, and the amount of the credit transaction or the credit limit approved.'' [566]

The Bureau notes that for HMDA, Regulation C § 1003.4(a)(7) requires reporting of ''the amount of the covered loan or the amount applied for, as applicable,'' which requires reporting of the amount applied for only when the credit is not originated. Because section 1071 uses the conjunction ''and'' rather than ''or,'' the Bureau reads section 1071 to require collection and reporting of the amount applied for regardless of whether the application is ultimately approved or originated. (The amount approved or originated data point is addressed in proposed § 1002.107(a)(8).)

SBREFA Proposals Under Consideration and Feedback Received

The Bureau stated in the SBREFA Outline that it was considering requiring financial institutions to report the amount applied for data point using the initial amount of credit or credit limit requested by the applicant at the application stage, or later in the process but prior to the financial institution's evaluation of the credit request.[567] The Bureau further explained in the SBREFA Outline that this method would not require reporting of amounts discussed before an application is made to a financial institution, but would capture the initial amount requested at the application stage or later, and would reflect the amount of the request that was evaluated by the financial institution in making a credit decision. In addition, if the applicant did not request a particular amount, but the financial institution underwrote the application as being for a specific amount, the financial institution would report the amount considered for underwriting. If the particular product applied for would not involve a specific amount requested or underwritten, the financial institution would report ''Not Applicable'' for this data point. Finally, the Bureau suggested in the SBREFA Outline [568] that when an applicant responds to a ''firm offer'' that specifies an amount, which may occur in conjunction with a pre-approved credit solicitation, the amount applied for would generally be the amount of the firm offer.

Because of the relationship between the amount applied for and the amount approved or originated data points, the following summary of SER feedback includes input on both.[569] One SER articulated the importance of capturing data on both the amount applied for and the amount approved, stating that both data points were necessary to identify potentially discriminatory practices, such as discouragement, in the lending process. Another SER explained that the amount applied for could change during the iterative application process, particularly with a business that may not have previously had a banking relationship with the financial institution, but that the amount generally stayed consistent through underwriting. Other SERs asserted that differences between the amounts requested and approved were frequent, for a variety of reasons. One SER stated that they notify applicants of a preliminary offered amount, which often changes after documentation and underwriting. One example offered was that disparities between the amount applicants applied for and the amount the lenders approved may be attributable to collateral being assessed at a different value than the amount the applicants initially requested. Some SERs also remarked that differences in these amounts were often attributable to financial institutions acting as counselors or advisors to small businesses, including start-ups, and going back and forth until arriving at an amount that is appropriate given the customer's needs.

One SER (who supported reporting the amount initially applied for and the amount approved) strongly opposed reporting counteroffers, stating that negotiation is quite prevalent in small business lending. Another SER suggested that the Bureau use ranges for reporting the amount applied for, rather than specific numbers, and that the Bureau allow a financial institution to report ''not applicable'' if an applicant does not specify an amount requested. A SER also suggested there could be other potential complexities in capturing data on credit amount/limit the applicant applied for and credit amount/limit the lender approved, such as simultaneous or grouped financings involving multiple products, different sub-limits for each product or loan, and

[566] ECOA section 704B(e)(2)(C).

[567] SBREFA Outline at 28–29.

[568] *Id.*

[569] *See* SBREFA Panel Report at 27–28.

a general credit limit for an entire facility. SERs asked that these data points be captured in a manner that took these complexities into account.

The SBREFA Panel recommended that the Bureau seek comment on potential methods for avoiding misinterpretations of disparities between the credit amount/limit applied for and the credit amount/limit approved.[570]

The Bureau also received feedback from other stakeholders regarding this data point. Industry stakeholders providing feedback on the SBREFA Outline emphasized that arriving at an applied for amount is a complex, iterative process and that the reporting requirement should be flexible. One stakeholder suggested that the Bureau propose to require reporting of the amount of the request that was evaluated by the financial institution in making the credit decision. That stakeholder echoed the comments of others when it explained that the amount of credit requested can change a great deal in formulating an application. The stakeholder further explained that some borrowers request a specific amount immediately, others may not arrive at a number until after two or three sessions, and still others may float multiple numbers during several conversations, trying to gauge a loan officer's reaction. Another stakeholder commented that an applicant's stated credit desires can be arbitrary and that comparing the initial amount requested against the amount approved could be misleading and is not a reliable measure of the health or efficacy of small business lending. Other stakeholders stated that an applicant will often or usually state a specific amount early on, but that the amount will usually change during the process for various appropriate reasons. One stakeholder explained that small business loans generally are not a quick affair and require substantial review by and interaction between the lender and borrower, and business credit that it is uncommon for a small business applicant's requested credit amount to stay the same from application to underwriting. One trade association stated that many small businesses will request a much higher loan amount than what is ultimately approved after evaluation of collateral, particularly in transactions involving real estate or equipment, and that for start-ups and sole proprietorships a lack of sophistication can also lead to initial requests being unrealistic. That trade association further explained that in these cases, the financial institution will work with the applicant to arrive at a more reasonable amount, which could take place over a period of weeks or months. The trade association then recommended that the Bureau allow reporting of an amount that is determined at a later stage than the first request. Finally, another industry stakeholder requested that the Bureau propose to allow reporting of the applied for amount using ranges of numbers, stating that applicants often request credit this way.

A community group stakeholder stated that the Bureau should require financial institutions to report the initial amount requested at the time of application, explaining that the amount of credit requested is important for the purposes of section 1071, which it described as including enforcing fair lending laws and assessing whether credit needs are met.

Two stakeholders supported the use of ''not applicable'' when the credit product does not have a specific amount or limit, and another stakeholder said that no ''applied for'' credit limit should be required for open-end products. Two other stakeholders requested that the Bureau allow the use of ''not applicable'' whenever an applicant does not request a specific amount.

Proposed Rule

The Bureau is proposing in § 1002.107(a)(7) to require that a financial institution collect and report ''the initial amount of credit or the initial credit limit requested by the applicant.'' Proposed comment 107(a)(7)–1 would explain that a financial institution is not required to report credit amounts or limits discussed before an application is made, but must capture the amount initially requested at the application stage or later. In addition, proposed comment 107(a)(7)–1 would state that if the applicant does not request a specific amount, but the financial institution underwrites the application for a specific amount, the financial institution reports the amount considered for underwriting as the amount applied for. Finally, proposed comment 107(a)(7)–1 would instruct that if the applicant requests an amount as a range of numbers, the financial institution reports the midpoint of that range.

The Bureau is aware that there could be complexity in pinpointing the specific initial amount requested by an applicant in the fluid process of a small business credit application, which the Bureau acknowledges could make this data point difficult for financial institutions to collect and report. Nonetheless, the statute requires that the amount applied for be reported, and that information could be important for both of section 1071's statutory purposes. The Bureau believes that its proposed regulatory text and commentary, described above, would provide a flexible compliance regime for this data point that would accommodate different business practices. A financial institution would not be required to report amounts discussed before the application is made, which would accommodate preliminary informal interactions. In addition, the proposed comment's instruction on how to report this data point when the applicant requests a range of numbers would facilitate compliance in that situation and yield data that would be comparable to the other data collected for this data point (*i.e.,* specific numbers and not ranges of numbers). The Bureau believes that more precise information will be more useful and should not create extra difficulty for financial institutions to collect.

Furthermore, proposed comment 107(a)(7)–1 would address the method for reporting when no initial amount is requested by the applicant—that is, the financial institution reports the amount considered for underwriting as the amount applied for. The Bureau believes that this method would aid compliance and yield appropriate data by avoiding the need to report a preliminary number when a financial institution's business practices do not result in there being such a number to report. The Bureau understands that a specific amount is often not required by many financial institutions for products such as credit cards, as the financial institution assigns the credit limit as part of the credit evaluation process.

The SER and stakeholder feedback from SBREFA suggest that mandating reporting of an amount applied for in all cases could impose undue compliance burden and complicate Regulation B compliance for entities that do not, for certain products, currently require that the borrower request a specific credit amount or credit limit as part of the financial institution's application process. In light of the complexities and concerns described by the SERs and other stakeholders, and the Bureau's understanding that sometimes there is no amount underwritten to, the Bureau believes that the amount applied for data point should avoid interfering with this arrangement by allowing use of ''not applicable'' in certain instances. Thus, proposed comment 107(a)(7)–2 would explain that if the particular product applied for does not involve a

[570] *Id.*

specific amount requested or underwritten, the financial institution reports that the requirement is ''not applicable.''

In addition to situations in which no amount applied for is requested by the financial institution or underwritten to and the amount applied for would be ''not applicable,'' as described above, the Bureau understands that there may be situations where the financial institution requests an amount applied for but the applicant nonetheless does not provide one. To address this situation, proposed comment 107(a)(7)–2 would explain that, in compliance with proposed § 1002.107(c)(1), a financial institution shall maintain procedures reasonably designed to collect applicant-provided information, which includes the credit amount initially requested by the applicant. However, if a financial institution is nonetheless unable to collect or otherwise determine the amount initially requested, the financial institution reports that the amount applied for is ''not provided by applicant and otherwise undetermined.'' The Bureau believes that providing the reporting flexibilities in proposed comment 107(a)(7)–2, along with the proposed reporting of the amount presented for underwriting when appropriate, would facilitate compliance by accommodating different business practices and would also allow for collection of useful data.

Proposed comment 107(a)(7)–3 would provide instructions for reporting the amount applied for in regard to firm offers. ''Firm offers'' involve solicitations to small businesses when they have been pre-approved for a term loan, line of credit, or credit card.[571] Proposed comment 107(a)(7)–3 would explain that when an applicant responds to a ''firm offer'' that specifies an amount or limit, which may occur in conjunction with a pre-approved credit solicitation, the financial institution reports the amount applied for as the amount of the firm offer, unless the applicant requests a different amount. If the firm offer does not specify an amount or limit and the applicant does not request a specific amount, the amount applied for is the amount underwritten by the financial institution. The Bureau believes that when the applicant knows the amount of the pre-approval before responding, that figure could appropriately be considered as the amount applied for. The Bureau understands that financial institutions often provide an amount in such solicitations. But if no amount appears in the pre-approved solicitation, the Bureau considers that an applicant responding to the firm offer has not requested a specific amount, and reporting of the amount underwritten would be appropriate. The Bureau's proposal follows the SBREFA Outline's approach under consideration for handling firm offers, and the SERs and other stakeholders did not object to this method. The Bureau seeks comment, however, on whether it should handle reporting of the amount applied for in connection with firm offers in a different manner than as set forth in this proposed comment, such as by requiring reporting of ''not applicable'' in situations where the firm offer does not specify an amount or limit and the applicant does not request one.

Proposed comment 107(a)(7)–4 would explain that when reporting a covered application that seeks additional credit amounts on an existing account, the financial institution reports only the additional credit amount sought, and not any previous amounts sought or extended. The Bureau believes that this comment would facilitate compliance by providing clear guidance on reporting in this situation, and that avoiding double reporting of previous amounts would result in more appropriate and useful data. The Bureau notes that a request to withdraw additional credit amounts at or below a previously approved credit limit amount on an existing open-end line of credit would not be a covered application, and so proposed comment 107(a)(7)–4 would not apply to such a situation.

The Bureau believes that the proposed regulatory text and commentary described above would alleviate many of the concerns of the SERs and other stakeholders providing feedback on the SBREFA Outline. The Bureau notes that the proposal would accommodate different business practices and the often fluid nature of amounts applied for in small business lending. In regard to concerns about disparities between the amount applied for and the amount approved or originated, section 1071 requires the collection and reporting of the amount applied for, which is important for both of section 1071's statutory purposes.

The Bureau seeks comment on its proposed approach to the amount applied for data point. The Bureau also requests comment on how best to require reporting of amount applied for in situations involving multiple products or credit lines under a single credit limit. The Bureau also requests comment on potential methods for avoiding misinterpretations of disparities between the amount applied for and the amount approved or originated. Finally, the Bureau requests comment on its proposed approach to reporting when a range of numbers is requested.

107(a)(8) Amount Approved or Originated

Background

Section 1071 requires financial institutions to collect and report ''the amount of the credit or credit limit applied for, and the amount of the credit transaction or the credit limit approved.''[572] (The amount applied for data point is addressed in proposed § 1002.107(a)(7).) As explained in the section-by-section analysis of proposed § 1002.107(a)(7) above, the Bureau reads section 1071 to require collection and reporting of the amount or limit applied for as well as the amount of the credit transaction or credit limit approved.

SBREFA Proposals Under Consideration and Feedback Received

In the SBREFA Outline, the Bureau explained that it was considering proposing that financial institutions report (1) the *amount of the originated loan* for a closed-end origination; (2) the *amount approved* for a closed-end loan application that is approved but not accepted; and (3) the *amount of the credit limit approved* for open-end products (regardless of whether the open-end product is originated or approved but not accepted).[573] In light of the potential meaning of the statutory language, the Bureau explained that it was considering proposing different standards for closed-end and open-end products. In addition, the financial institution would report ''Not Applicable'' for this data point for applications that are denied, closed for incompleteness, or withdrawn by the applicant before a credit decision is made.

The relevant SBREFA Panel Report section summarized feedback on both the amount applied for and the amount approved data points. For ease of reading, the Bureau has included the discussion of both above in the section-by-section analysis of proposed § 1002.107(a)(7). The following summary focuses more on the amount approved or originated data point. One SER articulated the importance of capturing data on both the amount applied for and the amount approved, stating that both data points were necessary to identify practices, such as

[571] *See* 15 U.S.C. 1681a(*l*); *see also* Regulation B comment 12(b)(7)–1 (describing offers of credit).

[572] ECOA section 704B(e)(2)(C).

[573] SBREFA Outline at 23.

discouragement, in the lending process. Other SERs asserted that differences between the amounts requested and approved were frequent, for a variety of reasons. One SER stated that they notify applicants of a preliminary offered amount, which often changes after documentation and underwriting. One example offered was that disparities between the amount applicants applied for and the amount the lenders approved may be attributable to collateral being assessed at a different value than the amount the applicants initially requested.

One SER (who supported reporting the amount initially applied for and the amount approved) strongly opposed reporting counteroffers, stating that negotiation is quite prevalent in small business lending.[574] Another SER also suggested there could be other potential complexities in capturing data on credit amount/limit the applicant applied for and credit amount/limit the lender approved, such as simultaneous or grouped financings involving multiple products, different sub-limits for each product or loan, and a general credit limit for an entire facility. SERs asked that these data points be captured in a manner that took these complexities into account.

As noted in the feedback summary above, the SBREFA Panel recommendation addressed both the amount applied for and the amount approved data points. The Panel recommended that the Bureau seek comment on potential methods for avoiding misinterpretations of disparities between the credit amount/limit applied for and the credit amount/limit approved.[575]

Few of the stakeholders who provided written feedback on the SBREFA Outline objected to the reporting method under consideration for amount approved/originated. One commenter asked that this data point be reported using ranges of numbers rather than specific amounts, in order for it to be uniform with the method it suggested for the amount applied for data point. Other commenters pointed out possible confusion as to the definitions of closed-end and open-end credit. In addition, commenters stated that sometimes applicants are provided more than one approval amount, and one commenter suggested that in such cases the Bureau should require reporting of the highest approval amount when the credit is approved but not accepted.

Proposed Rule

The Bureau is proposing in § 1002.107(a)(8) that the amount approved or originated data point be collected and reported as follows: (i) For an application for a closed-end credit transaction that is approved but not accepted, the financial institution collects and reports the amount approved by the financial institution; (ii) for a closed-end credit transaction that is originated, the financial institution collects and reports the amount of credit originated; and (iii) for an application for an open-end credit transaction that is originated or approved but not accepted, the financial institution collects and reports the amount of the credit limit approved.

The Bureau's proposal follows the SBREFA Outline approach for this data point, with certain adjustments and clarifications. First, for clarity the proposed rule refers to this data point as ''amount approved or originated.'' In addition, the Bureau is proposing comment 107(a)(8)–2 to explain that when a financial institution presents multiple approval amounts from which the applicant may choose, and the credit is approved but not accepted, the financial institution reports the highest amount approved. The Bureau believes that reporting the highest amount approved when credit is approved but not accepted, as addressed in this proposed comment, would most accurately reflect the amount of credit that was made available to the applicant in this situation.

Proposed comment 107(a)(8)–1 would provide general instructions for the amount approved or originated data point, explaining that a financial institution would comply with proposed § 1002.107(a)(8) by reporting the amount approved or originated for credit that is originated or approved but not accepted. For applications that the financial institution, pursuant to proposed § 1002.107(a)(9), reports as denied, withdrawn by the applicant, or incomplete, the financial institution would report that the amount approved or originated is ''not applicable.'' The Bureau believes that these instructions and providing for reporting of ''not applicable'' in certain circumstances will facilitate compliance for this data point and elicit accurate and appropriate data.

Proposed comments 107(a)(8)–3 and –4 would provide specific instructions for identifying and reporting the amount approved or originated for closed-end transactions, including refinancings. The Bureau believes that the instructions provided would facilitate compliance and elicit accurate and useful data.

Proposed comment 107(a)(8)–5 would provide instructions regarding counteroffers and the amount approved or originated data point, explaining that if an applicant agrees to proceed with consideration of a counteroffer for an amount or limit different from the amount for which the applicant applied, and the covered credit transaction is approved and originated, the financial institution reports the amount granted. Proposed comment 107(a)(8)–5 would further explain that if an applicant does not agree to proceed with consideration of a counteroffer or fails to respond, the institution reports the action taken on the application as denied and reports ''not applicable'' for the amount approved or originated. The proposed comment would then provide a reference to proposed comment 107(a)(9)–2, which discusses the action taken data point in relation to counteroffers. For a more complete discussion of how the proposed rule would treat reporting obligations for applications involving counteroffers, see the section-by-section analysis of proposed § 1002.107(a)(9) below (action taken).

Most of the SER feedback on the amount approved or originated data point focused on its relation to the amount applied for data point. That issue is discussed in the section-by-section analysis of proposed § 1002.107(a)(7) above (amount applied for). One SER also expressed concern about reporting counteroffers in relation to the amount approved or originated data point. The Bureau believes that, as explained above, proposed comment 107(a)(8)–5 provides an appropriate and manageable method for reporting amount approved or originated in counteroffer situations. Other stakeholders asked that the Bureau take into account the complexity of multiple product or account situations. The Bureau has done so in relation to its treatment of covered applications, discussed in the section-by-section analysis of proposed § 1002.103(a) above. In regard to the comment concerning confusion between closed-end and open-end credit, the Bureau is proposing to define these terms clearly in the regulatory text at proposed § 1002.102(e) and (n). As for the suggestion that the amount approved or originated data point be reported using ranges of numbers (for consistency with its request to report the amount applied for data point using ranges), the Bureau is not proposing to have financial institutions report the amount applied for using ranges of numbers, though it

[574] The SER feedback discussed in this section-by-section analysis can be found in the SBREFA Panel Report at 27–28.

[575] *Id.* at 46.

does seek comment on this possibility in the section-by-section analysis of proposed § 1002.107(a)(7) above.

The Bureau reads the statutory language ''the amount of the credit transaction or the credit limit approved'' to require the amount of the credit limit approved to be reported for open-end applications, and the amount of the credit transaction to be reported for closed-end applications. The Bureau believes the phrase ''the amount of the credit transaction or the credit limit approved'' to be ambiguous in regard to closed-end transactions because the most common meaning of the word ''transaction'' in the context for closed-end credit transactions would be an originated loan. Thus, the Bureau reasonably interprets the statute as requiring reporting of the amount originated for closed-end credit transactions. In the alternative, section 1071 authorizes the Bureau to include any ''additional data that the Bureau determines would aid in fulfilling the purposes of [section 1071].'' The Bureau has determined that for closed-end credit transactions that are originated, reporting of the amount originated would aid in fulfilling the enforcement of fair lending laws, by indicating the credit that had been provided to different types of applicants in actual transactions. The Bureau has also determined that reporting of the amount originated for closed-end credit transactions would aid in fulfilling the business and community development purpose of section 1071 by providing a more complete and accurate picture of the credit actually being provided to different businesses and communities. In addition, in the alternative, the Bureau believes that it is appropriate to use its exception authority under ECOA section 704B(g)(2) to require the amount originated, rather than the amount approved, for originated closed-end credit transactions, because collecting data on the amount approved instead of the amount originated for a closed-end transaction would compromise the utility and quality of the data being reported, thus inhibiting the fair lending and business and community development purposes of section 1071.

Similarly, the Bureau has determined that for closed-end credit that is approved but not accepted, the amount approved would aid in fulfilling the purposes of section 1071. Primarily, reporting of the amount approved for closed-end credit would aid in fulfilling the enforcement of fair lending laws, by indicating the credit that had been offered to different types of applicants when the transaction does not close and there is no amount originated to report. Reporting of the amount approved for closed-end credit would also aid in fulfilling the business and community development purpose of section 1071 by providing a more complete picture of the credit being offered to different businesses and communities.

The Bureau seeks comment on its proposed approach to the amount approved or originated data point, including on the specific requests for input above. As recommended by the SBREFA Panel and explained in the section-by-section analysis of proposed § 1002.107(a)(7) above, the Bureau requests comment on potential methods for avoiding misinterpretations of disparities between the credit amount or limit applied for and the credit amount or limit originated or approved and on the possible use of ranges of numbers for reporting the amount applied for and amount approved or originated data points. In addition, the Bureau requests comment on whether it would be useful and appropriate to require reporting of the amount approved as well as the amount originated for originated closed-end credit transactions.

107(a)(9) Action Taken

Background

ECOA section 704B(e)(2)(D) requires financial institutions to report the ''type of action taken'' on an application.

SBREFA Proposal Under Consideration and Feedback Received

In the SBREFA Outline, the Bureau stated it was considering proposing five categories for reporting ''action taken'': Loan originated, application approved but not accepted, application denied, incomplete application (closed or denied), and application withdrawn by the applicant.[576]

*Action taken categories in general.* Most SERs were supportive of the action taken categories under consideration.[577] Several SERs stated that the categories align with information they currently collect. One SER explained that a single application could pass through all of these stages and expressed concern that identifying the right category to report may be subjective and questioned by examiners or auditors after the fact. Another SER asked for additional clarity on the difference between denied applications and incomplete applications. This SER also suggested adding a category for lenders to indicate if an applicant is rate shopping. The SBREFA Panel recommended that the Bureau further clarify the circumstances in which each of the action taken categories should be used.[578]

Of the other stakeholders that provided feedback on this issue, several supported the action taken codes set forth in the SBREFA Outline. One industry commenter stated that the data point would generally not be difficult or expensive to report and two commenters reported currently tracking some similar (though not identical) fields. One community group commenter underscored the importance of collecting action taken codes (including approvals and denials) in order to track demand for credit and identify potential discrimination. The commenter also noted current available data (Community Reinvestment Act data and surveys) on small business lending provides limited information on supply and demand. The commenter stated that capturing incomplete and withdrawn applications was important as it may reflect discouragement or discriminatory treatment, and that the approved but not accepted category could reflect less favorable pricing or loan terms. Two industry commenters suggested the Bureau further simplify the action taken categories by eliminating the approved but not accepted and incomplete categories, and including only originated, abandoned, and denied categories. One stakeholder suggested adding a field for other circumstances, such as rate shopping. Several community group commenters suggested the action taken categories be expanded to include all the HMDA action taken categories.

*Treatment of counteroffers.* In response to a question in the SBREFA Outline about whether counteroffers should be separately identified in the 1071 data set, several SERs discussed the frequency of counteroffers in small business lending and the potential utility of capturing counteroffers in 1071 data. One SER expressed concern with reporting each adjustment in the application process because, they said, not all counteroffers are memorialized in writing. In the context of discussions on the amount approved data point, a SER strongly opposed reporting counteroffers, stating that negotiation is quite prevalent in small business lending. The SBREFA Panel recommended the Bureau seek comment on whether to capture counteroffers in 1071 data, and if so, the best method for doing so.[579]

Other stakeholders also commented on counteroffers. Several industry

[576] SBREFA Outline at 29–30.

[577] The SER feedback discussed in this section-by-section analysis can be found in the SBREFA Panel Report at 28–29.

[578] *Id.* at 46.

[579] *Id.*

commenters stated that counteroffers should not be reported. The commenters noted that there are often multiple rounds of back-and-forth communications in small business lending, that capturing counteroffers is unnecessary as the information is practically captured in the loan decision and other 1071 data (such as loan amount approved), and that counteroffers are not necessary to show the availability of credit. If reported, several industry commenters suggested use of a data flag to simplify reporting, avoid reporting of potentially numerous counteroffers in a single application, and avoid the additional costs for financial institutions to conduct edits and validity checks on each separate counteroffer. Another industry representative also urged that if counteroffers are reported, they should be considered a single application. No community groups commented on this topic.

Proposed Rule

The Bureau is proposing in § 1002.107(a)(9) to require reporting of the action taken by the financial institution on the covered application, reported as originated, approved but not accepted, denied, withdrawn by the applicant, or incomplete. As discussed above, most SERs and other stakeholders were generally supportive of these categories. In addition, the Bureau is proposing to categorize all incomplete applications as a single category of ''incomplete''; while this proposed approach is not consistent with Regulation C comments 4(a)(8)(i)–4 and –6, the Bureau is concerned about potential errors in the data if financial institutions report incomplete denials separate from notices of incompleteness. There may also be some benefit for fair lending analysis to reserve the denied category solely for credit-related denials, rather than denials that are based on incompleteness. As noted below, the Bureau seeks comment on reporting the ''incomplete'' action taken category.

In response to commenter suggestions, the Bureau considered removing or combining several action taken categories. For example, the Bureau considered eliminating the approved but not accepted category; however, because the Bureau believes data collected under this category would reflect demand for credit, the Bureau is retaining this category in its proposal. The Bureau also considered removing the category of incomplete applications. However, because the Bureau believes capturing data on incomplete applications is essential to identifying potential discrimination and discouragement during the application process, the Bureau is retaining this action taken category as well. Finally, the Bureau considered combining the incomplete and withdrawn categories, since both actions reflect an applicant's inability or affirmative decision not to proceed with the request for credit. However, the Bureau is retaining incomplete and withdrawn as separate categories, as a high incidence of incomplete applications could signal an issue with the level of assistance provided by the financial institution (for example, not providing reasonable support or assistance to ensure an applicant satisfies all credit conditions; or providing more support to some applicants than others). As noted below, the Bureau seeks comment on this issue.

The Bureau is not proposing additional action taken categories beyond what was considered in the SBREFA Outline. Although some commenters suggested the Bureau expand the action taken codes to those currently used in Regulation C (including preapprovals or purchased loans), the Bureau does not believe those additional fields would be appropriate or necessary in the context of section 1071 given the diversity of processes and other complexities in the small business lending space and because section 1071, unlike HMDA, does not expressly reference loan purchases.

The Bureau also considered, but is not proposing, adding an action taken category or flag for counteroffers. As noted by certain SERs and other commenters, it would be potentially infeasible to capture all of the proposed 1071 data fields for every back-and-forth counteroffer with an applicant, and attempting to do so would likely lead to confusion and data errors. The Bureau also agrees with commenter feedback that, even without a counteroffer flag or field, the proposed section 1071 data fields would capture many of the terms of accepted counteroffers (such as pricing, guarantee, etc.), as well as the amount initially requested by the applicant. Thus, the Bureau believes the addition of a counteroffer flag or field would provide limited useful information beyond what would be captured under the current proposal. Moreover, while a counteroffer flag or field might be useful as a screening tool for potential discrimination (for example, if women-owned businesses or minority-owned businesses are provided counteroffers or denied at a higher rate than male- or non-Hispanic white-owned businesses), a flag alone would lack any specificity to provide further fair lending analysis.

Following the SBREFA Panel's recommendation and feedback from other stakeholders, proposed comment 107(a)(9)–1 would provide additional clarity on when a financial institution should select each of the proposed action taken codes. The financial institution identifies the applicable action taken code based on final action taken on the covered application.

Proposed comment 107(a)(9)–2 would provide instructions for reporting action taken on covered applications that involve a counteroffer, along with examples. The Bureau's proposed treatment of counteroffers aligns with how counteroffers are treated under existing § 1002.9 notification procedures. Specifically, proposed comment 107(a)(9)–2 would state that if a financial institution makes a counteroffer to grant credit on terms other than those originally requested by the applicant and the applicant declines to proceed with the counteroffer or fails to respond, the institution reports the action taken as a denial on the original terms requested by the applicant. If the applicant agrees to proceed with consideration of the financial institution's counteroffer, the financial institution reports the action taken as the disposition of the application based on the terms of the counteroffer. This proposed approach to reporting counteroffers also aligns with how they are reported under Regulation C.[580]

Proposed comment 107(a)(9)–3 would discuss reporting action taken for rescinded transactions. Proposed comment 107(a)(9)–4 would clarify that a financial institution reports covered applications on its small business lending application register for the year in which final action is taken. Finally, proposed comment 107(a)(9)–5 would provide guidance for reporting action taken if a financial institution issues an approval that is subject to the applicant meeting certain conditions.

The Bureau seeks comment on proposed § 1002.107(a)(9) that would require reporting of action taken and the associated commentary. The Bureau also specifically seeks comment on whether the ''withdrawn by applicant'' category should be merged with the ''incomplete'' category for purposes of reporting action taken. The Bureau seeks comment as well on whether the Bureau's proposal to categorize all incomplete applications as a single category of ''incomplete'' (closed or denied) should instead be reported consistent with the approach in

[580] Regulation C comment 4(a)(8)(i)–9.

Regulation C, which provides separate categories for denials (including on the basis of incompleteness) and files closed for incompleteness (if the financial institution sent a written notice of incompleteness). In addition, the Bureau seeks comment on whether counteroffers that are not accepted, such as a credit offer for a lower credit amount than requested, should be reported as ''approved but not accepted'' rather than ''denied,'' in order to reflect the availability of credit. As recommended by the SBREFA Panel, the Bureau also seeks comment on whether to specifically capture counteroffers in section 1071 data, and if so, whether to use a counteroffer flag in the data or some other method.

107(a)(10) Action Taken Date

In addition to requiring financial institutions to collect and report the type of action they take on an application, as discussed in the section-by-section analysis of proposed § 1002.107(a)(9) above, ECOA section 704B(e)(2)(D) requires financial institutions to collect and report the ''date of such action.''

In the SBREFA Outline, the Bureau indicated that it was considering proposing that the action taken date be reported with a day, month, and year, and requested feedback on potential challenges financial institutions may have in identifying such date for each of the action taken categories.[581] The Bureau received limited comments on this data point during the SBREFA process.[582] One SER suggested that the Bureau provide a grace period of several days before and after the action taken date. Another SER recommended that the date assigned as the action taken date be to the best of the financial institution's knowledge or belief given the uncertainty in assigning a particular date. The Bureau received similar feedback from other stakeholders. Two industry stakeholders suggested that a grace period or tolerance be provided to ease compliance burden, similar to the tolerance under consideration for the ''application date'' data point. One stakeholder recommended that the action taken date for approved and denied loans be the exact date such actions occurred.

Proposed § 1002.107(a)(10) would require action taken date to be reported as the date of the action taken by the financial institution. Proposed comments 107(a)(10)–1 through –5 would provide additional details on how to report the action taken date for each of the action taken categories in proposed § 1002.107(a)(9). For example, proposed comment 107(a)(10)–1 would explain that for denied applications, the financial institution reports either the date the application was denied or the date the denial notice was sent to the applicant.

The Bureau notes that its proposed approach for this data point largely mirrors the Regulation C approach for action taken date in § 1003.4(a)(8)(ii) and related commentary, with modifications to align with the action taken categories in proposed § 1002.107(a)(9). Regarding the request from a SER and other stakeholders to adopt a grace period for the action taken date data point, the Bureau believes that a grace period or tolerance to report the action taken date would not be necessary, in light of the flexibility already provided in proposed comments 107(a)(10)–1 through –5. Further, the Bureau believes that financial institutions generally already have policies and procedures in place to capture the date an action is taken in the normal course of their business operations.

Proposed comment 107(a)(10)–4 would explain that for covered credit transactions that are originated, a financial institution generally reports the closing or account opening date. That proposed comment also states that if the disbursement of funds takes place on a date later than the closing or account opening date, the institution may, alternatively, use the date of initial disbursement.

The Bureau seeks comment on its proposed approach to the action taken date data point.

In addition, for originated transactions, the Bureau is considering whether the date the application was approved should be captured in addition to, or instead of, the date of closing or account opening. The Bureau is also considering whether the date of closing or account opening should be reported separately from the date of disbursement of funds (for term loans) or funds availability (for lines of credit). Having these dates reported separately would permit the Bureau and other data users to determine the length of time elapsed between when an application is approved, when the closing occurred or the account was opened, and when the applicant actually received the loan funds or access to funds. Specifically, the Bureau is concerned that a lengthy gap between the loan approval date and the date the funds are made available to applicants could have adverse effects particularly on certain types of small businesses. For example, in agricultural lending where planting and harvesting seasons fall within certain time frames, if loan proceeds are not provided within a certain period of time after the financial institution receives and approves an application, the loan proceeds may no longer be of maximum value to the applicant. The Bureau seeks comment on whether it should adopt data points to capture application approval date and/or the date funds are disbursed or made available.

107(a)(11) Denial Reasons

Background

ECOA section 704B(e)(2)(H) authorizes the Bureau to require financial institutions to compile and maintain ''any additional data that the Bureau determines would aid in fulfilling the purposes of [section 1071].'' In addition to requiring financial institutions to collect and report the action taken date for denied applications, as discussed in the section-by-section analysis of proposed § 1002.107(a)(10) above, the Bureau is proposing to require financial institutions to collect and report the principal reason or reasons an application was denied. The Bureau believes that collection of denial reason information would aid in fulfilling the purposes of section 1071, as explained below.

SBREFA Proposal Under Consideration and Feedback Received

In the SBREFA Outline, as part of its discussion regarding the action taken data point, the Bureau requested feedback on whether financial institutions would prefer to report denial reasons to help explain the decision on an application, and if so, whether reporting denial reasons should be mandatory or optional.[583]

When asked whether they would prefer reporting denial reasons to help explain the decision on an application, some SERs expressed concern about reporting denial reasons.[584] These SERs asserted that requiring lenders to report reasons for denial could add more burden than benefit, may not be useful given the number of possible reasons for a denial, might not shed light on the actual reasons for a denial, may be difficult to standardize for uniform reporting, would require additional processes to ensure accurate reporting, and may present heightened privacy concerns. One SER expressed a preference to report denial reasons.

Feedback received from other stakeholders was mixed. Stakeholders

[581] SBREFA Outline at 30.

[582] SBEFA Panel Report at 28–29.

[583] SBREFA Outline at 29–30.

[584] SBREFA Panel Report at 28–29.

opposing reporting denial reasons expressed concerns about the privacy of applicants' information if such data were released to the public. For example, they asserted that if denial reasons were released to the public, such information would make it easy to identify applicants from small communities and expose an applicant's sensitive business information like insufficient cashflow. One stakeholder mentioned that denial reasons may encompass multiple reasons and would therefore be burdensome to collect and store.

Stakeholders in favor of optional (rather than mandatory) reporting of denial reasons asserted that reporting this information would be unnecessary and burdensome and may further push small and mid-size financial institutions out of small business lending, and suggested that, if included in the rule, reporting not be made mandatory (that is, financial institutions would be permitted but not required to report such information, at the financial institution's discretion). One stakeholder suggested that rural community banks under $1 billion be exempted from reporting denial reasons due to data privacy concerns.

Finally, stakeholders in favor of mandatory reporting of denial reasons asserted that such data provide regulators and the public with important—and currently unavailable—data necessary to uncover fair lending issues and identify underwriting factors that need to be addressed. They stressed that the collection of denial data (via the action taken data point) accompanied by robust denial reasons will provide small business applicants with useful and actionable information. In addition, commenters noted that these data will help identify barriers to credit for small businesses and provide deeper insight into the reasons why credit is denied. The SBREFA Panel did not make any recommendations related to denial reasons.

Proposed Rule

Proposed § 1002.107(a)(11) would require reporting of the principal reason or reasons the financial institution denied the covered application. Proposed comment 107(a)(11)–1 would explain that a financial institution complies with proposed § 1002.107(a)(11) by reporting the principal reason or reasons it denied the application, indicating up to four reasons. The financial institution reports only the principal reason or reasons it denied the application, even if there are fewer than four reasons. The proposed comment provides an example to illustrate. The proposed comment would also state that reasons reported must accurately describe the principal reason or reasons the financial institution denied the application. Finally, the proposed comment provides a list of denial reasons from which financial institutions would select the principal reason or reasons for denying a covered application.

Proposed comment 107(a)(11)–1 also explains that a financial institution reports the denial reason as ''other'' where none of the enumerated denial reasons adequately describe the principal reason or reasons it denied the application, and the institution reports the denial reason or reasons as free-form text. The Bureau believes that allowing financial institutions to choose ''other'' in this situation would facilitate compliance. In addition, collecting information on ''other'' denials would assist the Bureau in monitoring trends in this area and key developments in the small business lending market, which the Bureau could use to inform any future iterations of the list.

Proposed comment 107(a)(11)–2 would clarify that a financial institution complies with proposed § 1002.107(a)(11) by reporting that the requirement is not applicable if the action taken on the application, pursuant to proposed § 1002.107(a)(9), is not a denial, and provides an example.

The Bureau notes that its proposed approach for this data point largely mirrors the Regulation C approach for denial reasons in § 1003.4(a)(16) and related commentary, with modifications to align with the reasons applications are denied in the small business lending (rather than residential mortgage lending) context.

Pursuant to its authority under ECOA section 704B(e)(2)(H), the Bureau believes that data regarding denial reasons would further the purposes of section 1071 by allowing data users to better understand the rationale behind denial decisions, help identify potential fair lending concerns, and provide financial institutions with data to evaluate their business underwriting criteria and address potential gaps as needed. In addition, robust data on application denial reasons across applicants, financial institutions, products, and communities could help target limited resources and assistance to applicants and communities, thus furthering section 1071's community development purpose. With respect to fair lending compliance, denial reasons data would help data users analyze potential denial disparities.

With regard to the potential additional compliance burdens SERs and other commenters referenced, the Bureau believes that, as a practical matter, most financial institutions are already documenting the principal reason or reasons for the denial in an adverse action notice, or should be prepared to do so if requested.[585] However, the Bureau recognizes that if a financial institution is not currently covered by existing adverse action notice requirements under Regulation B, it may face greater challenges in reporting this information than financial institutions that currently provide adverse action notifications. The concerns raised by SERs and other stakeholders regarding the privacy implications of denial reasons are addressed in part VI.C.viii below.

The Bureau also believes that exempting certain financial institutions from the requirement to report denial reasons, or permitting financial institutions to report denial reasons voluntarily, would not be appropriate given the need for consistent and meaningful data to further the purposes of section 1071. In addition, the Bureau considered gaps in the existing small business lending data and notes that available survey data are often not representative across the industry, does not provide timely information, and does not cover all entities involved in small business lending.[586] The Bureau notes that the 2015 HMDA Final Rule added mandatory reporting of denial reasons to Regulation C because the Bureau recognized that the collection of denial reason data could facilitate more efficient and less burdensome fair lending examinations.[587]

Finally, the Bureau is aware that certain stakeholders are concerned that reporting denial reason data may result in fair lending actions against financial institutions for potential discriminatory

[585] Existing § 1002.9(a)(3) requires creditors to provide the specific reasons for action taken or to notify business credit applicants of their right to request the reasons for denying an application or taking other adverse action.

[586] *See* 2020 Small Business Credit Survey. The survey provides baseline data on the financing and credit positions of small firms in 2020. It delivers information on small business financing needs, decisions, and outcomes to policymakers, lenders, and service providers. However, the survey is not representative because it surveys only employer firms (with less than 500 employees) and is subject to the firms' self-reporting. Also, only aggregate denial reasons are provided, and further breakdowns are unavailable. In addition, the survey provides a very limited list of denial reasons to survey respondents that may not correspond to denial reasons from financial institutions. *See also* Fed. Deposit Ins. Corp., *Small Business Lending Survey* (2018), *https://www.fdic.gov/bank/historical/sbls/section5.pdf.*

[587] *See* 80 FR 66127, 66204–05 (Oct. 28, 2015).

disparities. The Bureau, however, believes that including denial reasons in 1071 data might actually reduce this risk, as it would allow financial institutions to point to potentially legitimate reasons for disparities.

The Bureau seeks comment on its proposed approach to this data point, including regarding whether the denial reason categories listed and explained in proposed comment 107(a)(11)–1 sufficiently cover the common credit denial reasons in the small business lending industry. If not, the Bureau seeks input on other denial reason categories to consider including in the proposed list of denial reasons. The Bureau also requests further comment on the potential utility of denial reason data as well as on the potential burdens to industry in reporting denial reasons, in light of the denial reason categories it is proposing and the data's ability to aid in fulfilling the purposes of section 1071.

107(a)(12) Pricing Information

Background

ECOA section 704B(e)(2)(H) authorizes the Bureau to require financial institutions to compile and maintain ''any additional data that the Bureau determines would aid in fulfilling the purposes of [section 1071].'' The Bureau believes that pricing data would serve to further both the fair lending purpose and the business and community development purpose of 1071. The majority of small businesses are run by a single owner without extensive financial experience or expert staff to navigate the commercial credit marketplace, which lacks many of the Federal protections found in consumer lending.[588] Heightened risks to fair lending and small business development may arise from different pricing for the same products and the selective marketing of higher-priced or even predatory and unsustainable products. Because price-setting is integral to the functioning of any market, any analysis of the small business lending market—including to enforce fair lending laws or identify community and business development opportunities—would be less meaningful without this information.

Research conducted for the Department of Commerce has found that minority-owned businesses tend to pay higher interest rates on business loans than those that are not minority-owned,[589] and a recent report by the Federal Reserve Bank of Atlanta found that minority-owned firms more frequently applied for potentially higher-cost credit products, and were also more likely to report challenges in applying for credit such as being offered high interest rates.[590] In addition, research conducted for the SBA has found that Black- and Hispanic-owned businesses were less likely to have business bank loans and more likely to use more expensive credit card financing.[591] The 2020 Small Business Credit Survey by a collaboration of Federal Reserve Banks found that small business applicants to nonbank lenders, such as online lenders and finance companies, were more likely to report high interest rates or unfavorable terms than applicants to depository institutions.[592] To the extent that the recovery from the COVID–19 pandemic and resulting economic crisis is still ongoing when the Bureau's final 1071 rule becomes effective, and in regard to economic emergencies affecting small business access to credit that may occur in the future, tracking pricing in this segment of the market is particularly important.

The Bureau believes pricing data are important because the statutory data points alone offer (1) limited insight into underwriting disparities and (2) no insight into predatory prices or pricing disparities. For example, they might show that a particular market segment is expanding and apparently filling an important need, but this could actually be an area with predatory conduct. Pricing information would allow the Bureau and others to understand the situation more accurately. Data collection without pricing information could have the unintended consequence of incentivizing irresponsible lending, as providers seeking to increase representation of underserved groups could be encouraged to adopt high-cost models of lending.

Without information on pricing, data users would be unable to screen for fair lending pricing risks, and regulators would be less able to focus their enforcement and supervision resources appropriately on situations of greater possibility for questionable activities. In addition, if potential discriminatory conduct is monitored effectively in regard to loan approvals, but not in regard to pricing, industry compliance systems may focus solely on approvals and denials and ignore potential pricing disparities. Having pricing data available under 1071 would also increase transparency and help demonstrate to lenders where business opportunities exist to offer credit to underserved markets. In addition, it could demonstrate to small businesses the availability of more affordable credit.

SBREFA Proposal Under Consideration and Feedback Received

At SBREFA, the Bureau stated that it was considering proposing to include pricing of originated credit and credit that is approved but not accepted as a discretionary data point because it could further the fair lending purpose of section 1071 by enhancing the ability to effectively and efficiently enforce fair lending laws. In addition, the Bureau stated that pricing data could add value in promoting market transparency and new product development opportunities, thus furthering the business and community development purpose of section 1071. The Bureau also stated that a pricing data point could be reported on the basis of annual percentage rate (APR), total cost of credit (TCC), interest rate and total fees, or some other pricing metric. The SBREFA Panel recommended that, if pricing were to be part of this proposal, the Bureau seek comment on potential methods for avoiding misinterpretations of disparities in pricing data.[593]

During the SBREFA process, SERs provided various comments on the inclusion of pricing data in the rule.[594] Feedback relevant to a specific pricing data point is discussed in the section-by-section analysis of proposed § 1002.107(a)(12)(i) through (vi) below. Immediately below, the Bureau

[588] For example, TILA's standardized disclosure requirements and limits on linking compensation to loan terms, including pricing, do not apply to business loans. *See, e.g.,* 15 U.S.C. 1639b, Regulation Z § 1026.36 (TILA's prohibition on basing loan originator compensation on loan terms).

[589] U.S. Dep't of Com., *Minority Business Development Agency, Disparities in Capital Access between Minority and Non-Minority-Owned Businesses: The Troubling Reality of Capital Limitations Faced by MBEs,* at 3, 5, 21, 36–37 (2010), *https://archive.mbda.gov/page/executive-summary-disparities-capital-access-between-minority-and-non-minority-businesses.html.*

[590] Fed. Reserve Bank of Atlanta, *Report on Minority Owned Firms: Small Business Credit Survey* (Dec. 2019), *https://www.fedsmallbusiness.org/medialibrary/fedsmallbusiness/files/2019/20191211-ced-minority-owned-firms-report.pdf.*

[591] Alicia Robb, *Financing Patterns and Credit Market Experiences: A Comparison by Race and Ethnicity for U.S. Employer Firms,* at 47 (2018) (prepared for Off. of Advocacy, Small Bus. Admin.), *https://www.sba.gov/sites/default/files/Financing_Patterns_and_Credit_Market_Experiences_report.pdf.*

[592] However, the survey noted that online lenders tended to receive applications with lower credit scores so applicant risk could play a role in higher interest rates for nonbank lenders. *See* 2020 Small Business Credit Survey at 15.

[593] SBREFA Panel Report at 47.

[594] *Id.* at 31–32.

addresses feedback relevant to reporting pricing information in general.

Some SERs urged the Bureau to require submission of a pricing metric, stating, for example, that pricing data are essential to understanding the operation of the market and the nature of credit extended. Some SERs supported use of APR as a pricing metric, including several who stated that they currently calculate APR. One SER (a CDFI) stated that they disclose APR to applicants now, and that if they are able to easily collect and report this data point without additional cost and burden, other FIs should be able to do the same. Several SERs supported the use of APR to enable comparisons of pricing across various small business lending products, and suggested the Bureau look to State-mandated and Truth in Lending Act APR disclosures for guidance on methodologies. One SER supported the use of APR as the metric if lenders and not the Bureau did the calculation. Another SER suggested the Bureau collect detailed pricing information, including APR, but ''hold harmless'' the reporting financial institutions to ensure the accuracy of the data. Conversely, at least two SERs opposed using APR as a pricing metric; one cited the burden associated with making that calculation and the other said pricing information based on APR would be confusing to small business owners. Several SERs supported reporting pricing information as interest rate and fees. Two SERs preferred using TCC. One SER suggested that the Bureau consider allowing financial institutions to choose which pricing metric they prefer to report.

A large majority of industry stakeholders opposed inclusion of any discretionary data points, and they were particularly concerned about a pricing data point. Several stakeholders stated that a pricing data point would be complex and costly to implement across various product types. One stakeholder was concerned about contracts that bundle services with credit, stating that pricing data would not capture the true economics of the transaction. Several stakeholders were worried about reputational risk because pricing could be publicly reported without contextual information such as the nature of the collateral, credit scores, size of down payment, compensating deposit balances, bundled services, etc., that would explain the pricing variations. One commenter opposed including pricing data, but said that if the Bureau chose to do so it should also allow voluntary submission of some of this contextual information. One stakeholder stated that pricing of commercial loans is often complex and cannot be adequately analyzed with the limited factors proposed, which may lead to erroneous conclusions and have severe negative impacts on the financial industry from regulatory and reputational risk standpoints. A community bank stakeholder commented that community banks price risk on a case-by-case basis and asserted that if this ability to price risk appropriately is restricted by uninformed fair lending guidelines, the Bureau risks removing a large number of community banks from existence. The bank went on to opine that this could further reduce the ability of thousands of small businesses to access credit. Another bank stated that pricing data alone would provide an incomplete picture that could be easily distorted to suit the political agenda of the user. That bank was also concerned about disparate impact analysis or similar tools being used because this could be unfair to the bank or its borrowers considering the small data set that the reported data of this small bank represents. Another stakeholder summed up these industry concerns, stating that pricing is simply too varied across the spectrum of the industry to include in the 1071 process without sowing confusion among lenders, borrowers, and the general public, stifling lending activity, and introducing numerous unintended consequences.

Several SERs, along with industry stakeholders, were concerned about the Bureau potentially making public pricing data and felt that this choice could be costly and challenging to carry out. They further asserted that bad outcomes could result from unjustified fair lending concerns, such as distortions to the market through interference with risk-based pricing. Many SERs, along with other industry stakeholders, noted that pricing is complex, often unique to the applicant's situation, and may involve extra services bundled with the loan. Without adequate context, therefore, pricing data could lead to inaccurate interpretations of the collected data and unfair reputational damage. One SER stated that the market for small business credit is price competitive and accordingly pricing information is unnecessary for section 1071. Another SER said that pricing for some products may reflect more than just the cost of the loan and may be high relative to other credit products if the covered financial institution is a supportive lender working with less established or higher credit risk applicants over a period of time. Similarly, the SBREFA Panel Report recommended that the Bureau seek comment in the proposed rule on potential methods for avoiding misinterpretations of disparities in pricing.[595]

Community groups, as well as some community development lenders, strongly favored inclusion of discretionary data points in general, and were particularly interested in having pricing data reported to help achieve 1071's purposes. One stakeholder stated that pricing information is a critical fair lending tool and would allow regulators, advocates, and industry to conduct fair lending reviews and monitor the market for emerging high-cost products. That commenter also stated that the eventual inclusion of pricing data in HMDA has been critical in identifying disparate pricing among protected classes. Another stakeholder suggested that a data collection regime designed to further fair lending enforcement cannot ignore information about whether high-cost lenders are targeting business owners of color or women-owned businesses, or if lenders are charging more to their female borrowers or customers of color. One community group stated that without pricing data lenders flooding neighborhoods of color with high-cost loans would be seen as adequately serving otherwise underserved markets. Another commenter stated that MCAs have extremely high effective APRs, and added that if section 1071 data collection indicates that access to capital is improving but is blind to whether that capital is provided at 30 percent APR or 300 percent APR, Congress's intent will not be accomplished.

Regarding 1071's business and community development purpose specifically, one stakeholder stated that merely by providing price transparency the Bureau could encourage the development of successful lending models because policymakers, community organizations, investors, banks seeking partnerships, and others would be able to see, for the first time, which business models are successful at reaching minority-owned, women-owned, and other underserved small businesses. That commenter went on to state that transparency would also attract investment capital and partnerships into models that work, and could lead to a market-based model and a pro-innovation approach to regulation.

One community development lender that supported inclusion of a pricing data point encouraged the Bureau to identify one consistent pricing metric

[595] *Id.* at 47.

that financial institutions must report on and added that because this could create reporting challenges, especially for smaller institutions, the Bureau should ensure there is clear guidance and consistency on the pricing data point. Of the pricing metrics asked about in the SBREFA Outline, a majority of the community groups and community development lenders who supported inclusion of a pricing data point preferred use of APR, though some suggested the Bureau also require reporting of rate and fees with the APR, as well as rate spread as reported under HMDA. One community development lender stated that APR is the only established metric that enables informed comparisons of the cost of capital over time and between products of different dollar amounts and term lengths. That lender went on to state that APR is the metric that people know and expect, because it is the legally required standard for mortgages, auto loans, credit cards, student loans and personal loans, including short-term loans. The lender further explained that small businesses seeking financing from CDFIs or mission-based lenders are informed about their true cost of capital through an APR disclosure, and if it can easily collect and report this data point without additional burdens and costs, other small business lenders should be able to. Some commenters who favored APR suggested that the Bureau start with the recent disclosure methods adopted in California and New York, and that the Bureau use those methods for pricing of MCAs and factoring specifically.

Industry stakeholders stated that APR would be complicated and costly to implement, and that if it is used the Bureau should provide clear guidance, with one stakeholder suggesting the Bureau follow the Regulation Z method, which sets out instructions for calculating APR. Another stakeholder stated that for some products, such as inventory financing, APR would be meaningless. Some industry stakeholders suggested the Bureau use other metrics—one requested TCC, another requested rate and fees, and a third asked that the Bureau allow reporting of a single fixed fee as an option.

Finally, some SERs and industry stakeholders also expressed privacy-related concerns regarding public disclosure of pricing information. The Bureau addresses these comments in part VI below regarding privacy considerations involving publication of the 1071 data.

Proposed Rule

The Bureau is proposing, in § 1002.107(a)(12), to require financial institutions to report certain pricing information for covered credit transactions. Specifically, proposed § 1002.107(a)(12)(i)(A) would require financial institutions to report the interest rate that is or would be applicable to the covered credit transaction; proposed § 1002.107(a)(12)(ii) would require financial institutions to report the total origination charges for a covered credit transaction; proposed § 1002.107(a)(12)(iii) would require financial institutions to report the broker fees for a covered credit transaction; proposed § 1002.107(a)(12)(iv) would require financial institutions to report the total amount of all non-interest charges that are scheduled to be imposed over the first annual period of the covered credit transaction; proposed § 1002.107(a)(12)(v) would require financial institutions to report, for an MCA or other sales-based financing transactions, the difference between the amount advanced and the amount to be repaid; and proposed § 1002.107(a)(12)(vi) would require financial institutions to report information about any prepayment penalties applicable to the covered credit transaction.

Proposed comment 107(a)(12)–1 would clarify that, for applications that the financial institution reports as denied, withdrawn by the applicant, or incomplete, the financial institution reports pricing information as ''not applicable.'' Proposed § 1002.107(a)(12) would apply only to credit transactions that either have been originated or have been approved by the financial institution but not accepted by the applicant. The Bureau believes that pricing information is generally available for these transactions because the financial institution would generally have to determine the price to approve (or originate) the transaction. But other applications—like those that are denied, withdrawn by the applicant, or incomplete—would likely have terminated too early in the application process for pricing information to be generally available.

The Bureau is proposing to require financial institutions to report pricing data generally as interest rate and fees rather than APR, TCC, or another single pricing metric that attempts to combine multiple aspects of the cost of credit. The Bureau believes that interest rate and fees provide greater utility to data users than the formula-based pricing metrics described above, which will aid in fulfilling the purposes of section 1071. Separately enumerating the interest rate and certain general categories of fees will allow 1071 data users to more precisely analyze the components of a credit transaction's price. For example, 1071 data users could identify potentially discriminatory price disparities within upfront fees charged to borrowers at origination that may not be visible in a single pricing metric. Similarly, information about which components of a transaction's price may be relatively more expensive would allow users to better identify business and community development initiatives because they would be able to target their initiative at the particular component, such as the interest rate, that appears to be most responsible for the relatively high price of the transaction.

The diversity of products in the commercial lending space may also undermine the utility of APR or other single pricing metrics. Many MCAs, for example, lack either a defined term or a periodic payment amount. Thus, financial institutions would have to estimate these terms to calculate an APR.

The Bureau also believes that the interest rate and fees may be less burdensome for financial institutions to report than other single pricing metrics. These alternative pricing metrics involve complex calculations that may be difficult for financial institutions to perform accurately. And, as noted above, certain types of commercial financing would require financial institutions to assume or estimate parts of the pricing formula, further increasing complexity. The interest rate and fees, in contrast, are typically listed in the credit contract for a particular transaction.

The Bureau acknowledges that some financial institutions currently calculate APR for commercial financing transactions, or will do so in the future, either as a best practice or to comply with State disclosure laws. In developing the pricing data points in proposed § 1002.107(a)(12), the Bureau has reviewed definitions and concepts found in Regulation Z, such as the definition of ''finance charge'' in § 1026.4. Regulation Z also forms the basis for many parts of State commercial financing disclosure laws. The Bureau does not intend to achieve a wholesale incorporation of § 1026.4 into proposed § 1002.107(a)(12), with interpretations of one regulation necessarily controlling the meaning of the other regulation. In fact, as discussed below, in many places perfect alignment between proposed

§ 1002.107(a)(12) and Regulation Z would not be feasible or desirable. But proposed § 1002.107(a)(12) adopts many concepts from Regulation Z. The Bureau believes that this similarity may limit burden for financial institutions that are calculating APR for other purposes.

Regarding State commercial financing disclosures, the Bureau understands that the disclosures under development in New York and California [596] rely upon Regulation Z definitions, such as the finance charge. These States have not fully implemented their disclosures at the time of this notice and may change their standards in the future. In addition, other States might adopt new commercial financing disclosures with different definitions and methodologies. The Bureau will continue to monitor regulatory developments in the small business lending market, and seeks comment on ways to reduce burden on financial institutions with respect to overlaps or conflicts between State law disclosure requirements and the Bureau's proposal.

As a general matter, the Bureau believes that 1071 data can provide value to users without reflecting every factor that influences pricing. For comparison, HMDA data have a long history of utility for fair lending purposes even though they alone generally do not offer proof of compliance with fair lending laws.[597] This proposed rule includes several important factors that influence pricing, such as the credit product, the type of guarantee, and the credit purpose. These data points will help users avoid improper comparisons when examining the 1071 data. The Bureau seeks comment on its proposed approach to this data point, as well as regarding additional information that could help reduce misinterpretations of disparities in pricing, including modifications to the pricing information in proposed § 1002.107(a)(12). For example, the Bureau seeks comment on whether more information about the nature of the collateral securing the loan is necessary to understanding pricing data, such as total origination charges, applicable to a particular transaction.

Proposed Rule—107(a)(12)(i) Interest Rate

Proposed § 1002.107(a)(12)(i)(A) would require financial institutions to report the interest rate that is or would be applicable to the covered credit transaction. If the interest rate is adjustable, proposed § 1002.107(a)(12)(i)(B) would require the submission of the margin, index value, and index name that is or would be applicable to the covered credit transaction at origination.[598]

Proposed comment 107(a)(12)(i)–1 would clarify that if a covered credit transaction includes an initial period with an introductory interest rate, after which the interest rate adjusts, a financial institution complies by reporting information about the interest rate applicable after the introductory period. Proposed comment 107(a)(12)(i)–2 would explain that a financial institution reports the interest rate applicable to the amount of credit approved or originated reported in proposed § 1002.107(a)(8) if a covered credit transaction includes multiple interest rates applicable to different credit features. Lastly, proposed comment 107(a)(12)(i)–3 lists a number of indices to report and directs that if the index used does not appear on the list of indices provided, the financial institution reports ''other'' and provides the name of the index via free-form text. The Bureau believes that allowing financial institutions to choose ''other'' when an index that does not appear on the provided list is used would facilitate compliance. In addition, collecting this information on ''other'' indices would assist the Bureau in monitoring trends in this area and key developments in the small business lending market, which the Bureau could use to inform any future iterations of the list.

The Bureau is proposing to collect the interest rate on the covered credit transaction because this information furthers both the fair lending purpose and the business and community development purpose of section 1071 by allowing regulators, advocates, and industry to conduct fair lending reviews and monitor the market for emerging high-cost products. In addition, the availability of this pricing metric would provide pricing transparency and could encourage the development of successful lending models because policymakers, community organizations, investors, banks seeking partnerships, and others would be able to see which business models are successful at reaching minority-owned, women-owned, and other underserved small businesses.

As discussed above, research has found that minority-owned businesses tend to obtain, or be offered, higher interest rates on business credit. The collection of interest rate (along with fees) will allow the Bureau, other government agencies, and other data users to have insight into the existing market, monitor the market for potentially troubling trends, and conduct fair lending analyses that adequately take into account this important metric.

As discussed above, during the SBREFA process, several SERs supported the use of APR as a pricing metric. The Bureau notes that certain-State level commercial lending disclosures, notably California and New York, require the disclosure of APR.[599] Because the interest rate must be known to calculate APR, the Bureau believes that proposed § 1002.107(a)(12)(i) may impose little burden on financial institutions that already include the interest rate on such disclosures required by State law, as well as on the contract between the financial institution and the applicant.

Proposed § 1002.107(a)(12)(i)(B) would provide that, for adjustable interest rates based upon an index, a financial institution must report the margin, index value, and index name that is or would be applicable to the covered credit transaction at origination. Just as the disclosure of the interest rate for fixed rate transactions will allow data users to ascertain the interest rate applicable to the covered credit transaction throughout its cycle, the Bureau believes that these three elements will allow data users to do the same for adjustable rate transactions based upon an index and improve the

[596] Cal. S.B. 1235 (Sept. 30, 2018), *https://leginfo.legislature.ca.gov/faces/billTextClient.xhtml?bill_id=201720180SB1235;* 2020 N.Y. Sess. Laws ch. 369. The New York and California commercial financing disclosure laws are discussed in more detail below in relevant provisions.

[597] For example, the FFIEC cautions users of HMDA data that ''HMDA data are generally not used alone to determine whether a lender is complying with fair lending laws.'' Bureau of Consumer Fin. Prot., *FFIEC Announces Availability of 2020 Data on Mortgage Lending* (2021), *https://www.consumerfinance.gov/about-us/newsroom/ffiec-announces-availability-of-2020-data-on-mortgage-lending/; see also* Bureau of Consumer Fin, Prot., *Data Point: 2019 Mortgage Market Activity and Trends,* at 36 (2020), *https://files.consumerfinance.gov/f/documents/cfpb_2019-mortgage-market-activity-trends_report.pdf* (explaining that when examiners for the Federal banking agencies evaluate an institution's fair lending risk, they analyze HMDA price data, loan application outcomes, and explanatory factors, in conjunction with other information and risk factors, which can be drawn directly from loan files or electronic records maintained by lenders, in accordance with the Interagency Fair Lending Examination Procedures).

[598] It should be noted that not all covered credit transactions include an interest rate. Proposed § 1002.107(a)(12)(v) would apply to certain covered credit transactions that do not include an interest rate. The discussion of proposed § 1002.107(a)(12)(iv) below also addresses other covered credit transactions that may not include an interest rate.

[599] Cal. S.B. 1235 (Sept. 30, 2018), *https://leginfo.legislature.ca.gov/faces/billTextClient.xhtml?bill_id=201720180SB1235*; 2020 N.Y. Sess. Laws ch. 369.

utility of such data. Proposed comment 107(a)(12)(i)–4 would clarify that a financial institution complies with proposed § 1002.107(a)(12)(i)(B) by reporting the index value at the time the application is approved by the financial institution. The Bureau seeks comment on whether the index value should be reported based on a different time period or if at the time of approval is the most appropriate measure.

The Bureau seeks comment on proposed § 1002.107(a)(12)(i) and its commentary, including whether a different measure of pricing would provide more accurate data, whether additional information about pricing (for example, amortization type or adjustment frequency) would provide beneficial data to help ascertain fair lending risk and further the business and community development purpose of section 1071, and whether there are additional indices that should be included in the list from which financial institutions choose to report the applicable index on adjustable rate transactions.

The Bureau also seeks comment on whether there may be covered credit transactions where the interest rate may change after origination based on factors such as if the borrower maintains an account at the financial institution or if some other condition is met, and if so, whether additional commentary would be helpful to provide more guidance on which rate to report in that circumstance.

Proposed Rule—107(a)(12)(ii) Total Origination Charges

Proposed § 1002.107(a)(12)(ii) would require financial institutions to report the total origination charges for a covered credit transaction. Total origination charges are the total amount of all charges payable directly or indirectly by the applicant and imposed directly or indirectly by the financial institution at or before origination as an incident to or a condition of the extension of credit, expressed in dollars.

Proposed comment 107(a)(12)(ii)–1 would clarify that charges imposed uniformly in cash and credit transactions are not reportable. Proposed comment 107(a)(12)(ii)–2 would provide guidance on reporting charges imposed by third parties. Proposed comment 107(a)(12)(ii)–3 would clarify that broker fees are included in the total origination charges.[600] Proposed comment 107(a)(12)(ii)–4 would provide guidance on reporting charges for other products or services paid at or before origination. And proposed comment 107(a)(12)(ii)–5 would list examples of reportable charges.

The Bureau understands that financial institutions charge a variety of fees when originating credit for small business applicants. For example, financial institutions may charge fees for processing an application, for underwriting, for filing a UCC–1 statement, for obtaining an appraisal, for obtaining a guarantee through a Federal agency program, and for other activities related to origination. Depending on the financial institution and the credit product, similar fees may take different names. One financial institution may describe a charge as an origination fee, while another describes a similar charge as an underwriting or documentation fee. Proposed § 1002.107(a)(12)(ii) would provide information about the total amount of all upfront fees charged for originating and extending credit, regardless of how such fees are denominated.

Information about the total origination charges would benefit 1071 data users by giving them relatively granular pricing data. Much of the research on access to credit in the small business lending environment has lacked information about upfront fees,[601] or has used less granular pricing metrics.[602] Proposed § 1002.107(a)(12)(ii) would enable users to examine the contribution upfront costs make to the price of credit in the small business lending market. For example, users could analyze pricing disparities specifically in upfront costs charged to borrowers or borrowers in certain communities. Users could also look at total origination charges to better understand the relationship between the elements of credit pricing such as by examining the trade-offs between the interest rate and the upfront charges. Empowering users to engage in this level of analysis would aid in fulfilling the fair lending and business and community development purposes of the statute.

In developing the total origination charges data point, the Bureau considered definitions and concepts in existing regulations. In particular, Regulation Z § 1026.4 contains a measure of the cost of credit: The finance charge. Regulation Z § 1026.4 defines the finance charge as ''any charge payable directly or indirectly by the consumer and imposed directly or indirectly by the creditor as an incident to or a condition of the extension of credit.'' The finance charge appears in numerous regulatory provisions governing consumer financial services, such as disclosures to borrowers in certain mortgage transactions,[603] and calculation of the APR.[604]

Proposed § 1002.107(a)(12)(ii)'s description of total origination charges is similar to Regulation Z's definition of the finance charge. As with the finance charge, proposed § 1002.107(a)(12)(ii) would exclude charges imposed uniformly in cash and credit transactions.[605] Proposed § 1002.107(a)(12)(ii) would use a similar test for including fees and amounts charged by someone other than the financial institution.[606] And proposed § 1002.107(a)(12)(ii) adopts the same approach toward including broker fees in the total origination charges that Regulation Z takes toward including mortgage broker fees in the finance charge.[607] With respect to charges for other products or services that the applicant pays at or before origination, proposed comment 107(a)(12)(ii)–4 would explain that such charges are included in the total origination charges only if the financial institution requires the purchase of such other product or service. Regulation Z does not adopt a uniform approach to services bundled with the credit transaction. But charges or premiums for credit insurance or debt cancellation coverage are included in the finance charge if the creditor requires the purchase of such additional services.[608]

Proposed § 1002.107(a)(12)(ii), however, differs in important ways from Regulation Z's definition of the finance charge. First, proposed § 1002.107(a)(12)(ii) is narrower than the finance charge. The finance charge includes certain credit costs that are

[600] For more information on broker fees, see the section-by-section analysis of proposed § 1002.107(a)(12)(iii) below.

[601] *See, e.g.,* Minority Bus. Dev. Agency, U.S. Dep't of Com., *Disparities in Capital Access between Minority and Non-Minority-Owned Businesses: The Troubling Reality of Capital Limitations Faced by MBEs,* at 3, 5, 21, 36–37 (2010), *https://archive.mbda.gov/page/executive-summary-disparities-capital-access-between-minority-and-non-minority-businesses.html.*

[602] *See, e.g.,* Opportunity Fund, *Unaffordable and Unsustainable: The New Business Lending on Main Street* (2016), *https://aofund.org/news/unaffordable-and-unsustainable-new-business-lending/* (analyzing 150 alternative loans (*i.e.,* from nondepository lenders or marketplaces, generally obtained online) to small businesses and finding an average APR of 94 percent).

[603] *See* Regulation Z § 1026.38(o)(2).

[604] *See* appendix J to Regulation Z.

[605] *Compare* proposed comment 107(a)(12)(ii)–1, *with* Regulation Z comment 4(a)–1.

[606] *Compare* proposed comment 107(a)(12)(ii)–2, *with* Regulation Z § 1026.4(a)(1).

[607] *Compare* proposed comment 107(a)(12)(ii)–3, *with* Regulation Z § 1026.4(a)(3).

[608] Regulation Z § 1026.4(d)(1) and (3).

imposed after a financial institution originates a transaction, such as interest and time-price differential.[609] Proposed § 1002.107(a)(12)(ii), on the other hand, is limited to charges at or before origination, because other proposed pricing data points, such as the interest rate and initial annual charges, capture information about the cost of credit over the life of the transaction. Second, within its scope, proposed § 1002.107(a)(12)(ii) is more comprehensive than the finance charge. The finance charge excludes many upfront costs of obtaining credit. For example, the finance charge excludes application fees charged to all applicants for credit, and numerous fees in transactions secured by real property.[610] Proposed § 1002.107(a)(12)(ii) contains no similar exclusions. The Bureau believes that many of the upfront fees omitted from the finance charge, such as application fees, are typical of small business credit transactions, and therefore including such charges helps data users to understand pricing in the small business lending market. Additionally, a measure of origination charges with numerous exclusions may encourage financial institutions to shift costs to the excluded fees, where they would be hidden from users of the 1071 data. Finally, proposed § 1002.107(a)(12)(ii) is simpler than the Regulation Z definition of finance charge, which the Bureau believes may improve the likelihood that the information is accurately reported.

As discussed above, during the SBREFA process, some SERs supported use of APR as a pricing metric, including several who stated that they currently calculate APR. Several SERs supported the use of APR to enable comparisons of pricing across various small business lending products, and suggested the Bureau look to State-mandated and Truth in Lending Act APR disclosures for guidance on methodologies. Of the pricing metrics asked about in the SBREFA Outline, a majority of the community groups and community development lenders who supported inclusion of a pricing data point preferred use of APR, though some suggested the Bureau also require submission of rate and fees with the APR, as well as rate spread as reported under HMDA. Some commenters who favored APR suggested that the Bureau start with the recent disclosure methods adopted in California and New York, and that the Bureau use those methods for pricing of MCAs and factoring specifically. As discussed above, the Bureau is proposing to require financial institutions generally to report interest rate and fees, rather than APR. But in developing proposed § 1002.107(a)(12)(ii)'s definition of total origination charges, the Bureau has adapted certain language and concepts from Regulation Z's definition of the finance charge. Because the finance charge must be known to calculate APR, including the APR that would be disclosed under California and New York law,[611] the Bureau believes that proposed § 1002.107(a)(12)(ii) may impose less burden on financial institutions and improve the likelihood that the information is accurately reported as compared to a measure of total origination charges that had no similarity to the finance charge.

For the reasons given above, proposed § 1002.107(a)(12)(ii) would require financial institutions to report the total amount of all charges payable directly or indirectly by the applicant and imposed directly or indirectly by the financial institution at or before origination as an incident to or a condition of the extension of credit, expressed in dollars. Proposed § 1002.107(a)(12)(ii) would apply to credit transactions that either have been originated or have been approved by the financial institution but not accepted by the applicant. The Bureau seeks comment on proposed § 1002.107(a)(12)(ii) and its commentary. For example, the Bureau seeks comment on whether concepts and guidance adapted from Regulation Z, such as proposed comment 107(a)(12)(ii)–1 on comparable cash transactions, are applicable in the small business lending context such that they should be incorporated as drafted. The Bureau also seeks comment on whether to enumerate certain types of charges separately in the 1071 data, and whether to include or exclude certain types of charges in the total origination charges.

Proposed Rule—107(a)(12)(iii) Broker Fees

Proposed § 1002.107(a)(12)(iii) would require financial institutions to report the broker fees for a covered credit transaction. Broker fees are the total amount of all charges included in the total reportable origination charges that are fees paid by the applicant directly to a broker or to the financial institution for delivery to a broker, expressed in dollars.

Proposed comment 107(a)(12)(iii)–1 would provide an example of reporting different types of broker fees. Proposed comment 107(a)(12)(iii)–2 would clarify that financial institutions would use a ''best information readily available'' standard regarding fees paid directly to a broker by an applicant.

The Bureau believes that small business loan brokers are an important part of the small business lending market, and may feature more prominently in certain financing arrangements, such as MCAs. The existence of brokers creates opportunities for potential practices that inflate the cost of small business credit. For example, compensation that is tied to the terms of a loan may encourage brokers to steer applicants to financial institutions offering less favorable terms. Because of the potential risks involved in multi-party business arrangements, the FFIEC's Interagency Fair Lending Examination Procedures emphasize the importance of understanding the role that brokers play in a financial institution's lending process.[612] These risks may be heightened in the small business lending market because applicants lack the substantive protections afforded to consumer credit applicants, such as the prohibition on basing loan originator compensation on the terms of a transaction.[613]

Accordingly, proposed § 1002.107(a)(12)(iii) would provide information about the broker fees associated with a transaction. Although broker fees are included in proposed § 1002.107(a)(12)(iii)'s definition of total origination charges, separately enumerating the total broker fees would allow users to better understand the role that brokers play in the price of small business credit. For example, users could analyze whether broker fees specifically appear to be creating fair lending risk or higher prices for certain

[609] *Id.* § 1026.4(b)(1).

[610] *Id.* § 1026.4(c)(1) (application fees) and (7) (real-estate related fees).

[611] The New York and California disclosure laws currently add various costs to the Regulation Z finance charge depending on the credit product. *See* Cal. Dep't of Fin. Prot. & Innovation, Proposed Commercial Financing Disclosures (S.B. 1235) (Apr. 7, 2021), *https://dfpi.ca.gov/wp-content/uploads/sites/337/2021/04/2021-04-07-SB-1235-With-Redlines-FINAL-for-Publication.pdf*; 2020 N.Y. Sess. Laws ch. 369, 801(e).

[612] Fed. Fin. Insts. Examination Council, *Interagency Fair Lending Examination Procedures,* at 3 (2009), *https://www.ffiec.gov/PDF/fairlend.pdf* (instructing examiners to consider an institution's organization of its credit decision-making process, including identification of the delegation of separate lending authorities and the extent to which discretion in pricing or setting credit terms and conditions is delegated to various levels of managers, employees, or independent brokers or dealers and an institution's loan officer or broker compensation program).

[613] Regulation Z § 1026.36 (implementing TILA's prohibition on basing loan originator compensation on loan terms).

communities. Empowering users to engage in this level of analysis would aid in fulfilling the fair lending and business and community development purposes of the statute.

The Bureau believes, however, that financial institutions may have difficulty reporting broker fees that an applicant pays directly to a broker. Proposed comment 107(a)(12)(iii)–2 would clarify that a financial institution would rely on the best information readily available to the financial institution at the time final action is taken. Information readily available could include, for example, information provided by an applicant or broker that the financial institution reasonably believes regarding the amount of fees paid by the applicant directly to the broker. The ''best information readily available'' standard is used in reporting certain HMDA data under Regulation C,[614] and the Bureau believes it may also be appropriate for reporting fees paid directly to a broker by an applicant.

For the reasons given above, proposed § 1002.107(a)(12)(iii) would require financial institutions to report the total amount of all charges included in proposed § 1002.107(a)(12)(ii) that are fees paid by the applicant directly to a broker or to the financial institution for delivery to a broker, expressed in dollars. Proposed § 1002.107(a)(12)(iii) would apply to credit transactions that either have been originated or have been approved by the financial institution but not accepted by the applicant. The Bureau seeks comment on proposed § 1002.107(a)(12)(iii) and its commentary, including on the knowledge that financial institutions might have about direct broker fees and the challenges of reporting such information.

Proposed Rule—107(a)(12)(iv) Initial Annual Charges

Proposed § 1002.107(a)(12)(iv) would require financial institutions to report the total amount of all non-interest charges that are scheduled to be imposed over the first annual period of the covered credit transaction, expressed in dollars.

Proposed comment 107(a)(12)(iv)–1 would provide an example of how to calculate the amount to report. Proposed comment 107(a)(12)(iv)–2 would highlight that a financial institution should exclude interest expenses from the initial annual charges reported. Proposed comment 107(a)(12)(iv)–3 would note that a financial institution should not include any charges for events that are avoidable by the applicant, including for example, charges for late payment, for exceeding a credit limit, for delinquency or default, or for paying items that overdraw an account. Proposed comment 107(a)(12)(iv)–4 would provide examples of initial annual charges that may be scheduled to be imposed during the initial annual period, including monthly fees, annual fees, and other similar charges. Finally, proposed comment 107(a)(12)(iv)–5 would clarify that a financial institution complies with the provision by reporting as the default the highest amount for a charge scheduled to be imposed, and provides an example of how to calculate the amount reported when the scheduled fee to be imposed may be reduced based upon a specified occurrence.

The Bureau understands that there are a variety of ways that small business loans may be structured. This could include whether there is an interest rate imposed on the transaction, whether there are finance charges, and whether there are a myriad of other fees that may be scheduled to be paid or are contingent upon some occurrence. In addition, the Bureau understands from its market monitoring activity that covered credit transactions may include scheduled fees that encompass a substantial part of the cost of the covered credit product, and without knowledge of those fees, the cost of the credit would be misleading. The Bureau believes that proposed § 1002.107(a)(12)(iv) would enable data users to have a more accurate understanding of the cost of the covered credit transaction than if the data lacked information about scheduled fees.

As noted above, the Bureau believes that there may be small business loans that do not include an interest rate, but do include a monthly finance charge that is imposed on the covered credit transaction.[615] If the financial institution were only required to report the interest rate on these types of transactions, the true cost of credit would be wholly inaccurate because the monthly finance charge would not be reported. In addition, small business loans, like consumer loans, may include a number of other fees, such as annual fees and other similar charges. The information collected and reported under proposed § 1002.107(a)(12)(iv) would allow data users to have a more complete picture of the cost of the covered credit transaction and promote market transparency, thus furthering the business and community development purpose of section 1071. In addition, this pricing data could further the fair lending purpose of section 1071 as it could enhance the ability to effectively and efficiently enforce fair lending laws.

Proposed § 1002.107(a)(12)(iv) would provide that a financial institution only report charges scheduled to be imposed over the first annual period of the covered credit transaction. The Bureau believes that by only requiring scheduled charges to be reported (rather than the submission of all potential charges, some of which could be speculative), the data reported will be more accurate than if a financial institution had to make an educated guess as to what charges will be imposed over the first annual period. Proposed § 1002.107(a)(12)(iv) would not require a financial institution to itemize the charges reported thereunder. The Bureau believes that requiring charges to be itemized could add a considerable amount of complexity for financial institutions in collecting and reporting the initial annual charges, given the range of fees that could be charged and the variations in how they might be imposed. The Bureau seeks comment on the likelihood that FIs would schedule charges in the second year of a covered credit transaction and beyond specifically in an effort to avoid reporting the charges for purposes of 1071.

A financial institution complies with proposed § 1002.107(a)(12)(iv) by not including charges for events that are avoidable by the applicant; this restriction is explained more fully in proposed comment 107(a)(12)(iv)–3, which would provide examples of types of avoidable charges. As noted above, the Bureau believes that the accuracy of the data reported is enhanced by only including charges that are scheduled to be imposed and not including potential charges that are contingent upon an action (or inaction) by the borrower. The Bureau also believes that only requiring financial institutions to report such charges for the first year, and not the life of the loan, will minimize any burden associated with reporting the data. This information should be included in the contract and, at most, would require a simple calculation to arrive at the total charges for the initial annual period. An example of how to calculate the initial annual charges for the first annual period is found in proposed comment 107(a)(12)(iv)–1. The Bureau also seeks comment on how it should treat situations where the applicant has

[614] *See* Regulation C comments 4(a)(31)–4 and 4(a)(32)–5.

[615] Proposed comment 107(a)(12)(iv)–2 would clarify that financial institutions should not report the interest scheduled to be imposed in the first year under proposed § 1002.107(a)(12)(iv).

informed the financial institution that it expects to regularly incur ''avoidable charges,'' for example where an applicant intends to pay late each month, such that a late fee, which would otherwise be an avoidable charge and not reportable under this provision, is in effect no longer contingent. Specifically, the Bureau seeks comment on whether such charges should be reported as a scheduled charge.

Proposed comment 107(a)(12)(iv)–5 would provide additional explanation about what amount to report when the financial institution provides a discount on the charge if certain conditions are met. The Bureau understands that some financial institutions may provide a discount on specific charges when certain conditions are met. For example, a financial institution may provide a discount on a monthly charge if the borrower maintains a checking account at the financial institution. In such a circumstance, proposed § 1002.107(a)(12)(iv) would require the financial institution to report the non-discounted amount to maintain consistency across the data that is reported by all financial institutions.

The collection of initial annual charges was not discussed during the SBREFA process. However, during that process several SERs remarked that pricing is complex and often unique to the applicant's situation, and may involve extra services bundled with the loan, and without adequate context pricing data could lead to inaccurate interpretations and reputational damage to financial institutions. The Bureau believes that the submission of initial annual charge data will help to decrease the likelihood of inaccurate interpretations and provide additional context by giving a more complete picture of the pricing of each covered credit transaction.

For the reasons given above, proposed § 1002.107(a)(12)(iv) would require submission of the total amount of all non-interest charges that are scheduled to be imposed over the first annual period of the covered credit transaction, expressed in dollars. The Bureau seeks comment on proposed § 1002.17(a)(12)(iv) and its commentary, including whether to include or exclude certain types of charges as reportable under initial annual charges.

Proposed Rule—107(a)(12)(v) Additional Cost for Merchant Cash Advances or Other Sales-Based Financing

Proposed § 1002.107(a)(12)(v) would require financial institutions to report additional cost data for MCAs or other sales-based financing transactions. Specifically, this cost is the difference between the amount advanced and the amount to be repaid, expressed in dollars. Proposed comment 107(a)(12)(v)–1 would provide an example of the difference between the amount advanced and the amount to be repaid for an MCA.

As discussed above, the Bureau is proposing several data points to provide information on pricing in the small business lending market. These pricing data points would provide information about the interest rate and fees applicable to a covered credit transaction. Some types of commercial financing, however, contain pricing terms that are difficult to reflect in data points about a transaction's interest rate and fees. For example, under a typical MCA, a merchant receives a cash advance and promises to repay it (plus some additional amount) to the MCA provider. MCA providers generally do not provide an interest rate, and while they may charge fees at origination or during the first year, the majority of an MCA's cost comes from the additional amount repaid by the merchant on top of the cash advance. This additional amount may be expressed as a multiple of the amount advanced in the form of a factor rate or percentage, or it may be derived by comparing the total payback amount to the amount actually advanced. This additional amount is typically not characterized as interest, so it would not be reported under proposed § 1002.107(a)(12)(i). Nor is this additional amount characterized as a fee charged at origination or scheduled to be imposed during the first year after the transaction, so it would not be reported under proposed § 1002.107(a)(12)(ii) or (iv). Without an additional pricing data point to capture this additional amount due, users attempting to analyze MCA pricing for fair lending or business and community development purposes would miss most of the cost of credit associated with these transactions. Therefore, the inclusion of this data point would aid in fulfilling the fair lending and business and community development purposes of the statute.

At the same time, the Bureau believes that information about the additional amount repaid by the merchant would impose relatively low burden on financial institutions. A typical MCA contract lists the amount of future revenue purchased and the purchase price. A financial institution could determine the additional amount repaid by computing the difference between these two numbers.

For the reasons discussed above, proposed § 1002.107(a)(12)(v) would require financial institutions to report, for an MCA or other sales-based financing transaction, the difference between the amount advanced and the amount to be repaid, expressed in dollars. Proposed § 1002.107(a)(12)(v) would apply to credit transactions that either have been originated or have been approved by the financial institution but not accepted by the applicant. The Bureau seeks comment on proposed § 1002.107(a)(12)(v) and proposed comment 107(a)(12)(v)–1, including whether to require additional pricing information for MCAs, and whether MCAs could be structured in ways that evade the proposed reporting requirement, such as by omitting or making variable the amount to be repaid.

Proposed Rule—107(a)(12)(vi) Prepayment Penalties

Proposed § 1002.107(a)(12)(vi)(A) would require financial institutions to report whether the financial institution could have included a prepayment penalty under the policies and procedures applicable to the covered credit transaction. Proposed § 1002.107(a)(12)(vi)(B) would require financial institutions to report whether the terms of the covered credit transaction include a charge imposed for paying all or part of the transaction's principal before the date on which the principal is due. Proposed comment 107(a)(12)(vi)–1 would provide additional information on how to determine whether the applicable policies and procedures allow a financial institution to include prepayment penalties in the loan agreement.

The Bureau understands, through its market monitoring function, that small business loan contracts may include prepayment penalties and the penalties can be sizable and structured as a percent of the remaining outstanding balance. The Bureau also understands that there may be concern among stakeholders, including community groups, that certain small business applicants may be steered toward loans containing prepayment penalty terms. The collection of data regarding which contracts contain a prepayment penalty and whether a prepayment penalty could have been imposed on specific contract types allows the data to be analyzed for fair lending purposes to see if certain groups may be steered into contracts containing prepayment penalties. Assuming that prepayment penalty data would be part of the publicly available data, from a market competition standpoint, financial institutions may want to know how

frequently their competitors are utilizing prepayment penalties. Thus, these data could help further the business and community development purpose of section 1071 by promoting market transparency and new product development opportunities.

Proposed § 1002.107(a)(12)(vi)(A) would require financial institutions to report whether the financial institution could have included a prepayment penalty under the policies and procedures applicable to the covered credit transaction, while proposed § 1002.107(a)(12)(vi)(B) would require financial institutions to report whether the terms of the covered credit transaction actually include a prepayment penalty term. The provisions would allow data users to determine what percentage of covered credit transactions could contain a prepayment penalty term, what percentage of such transactions actually contain the term, and, together with other data points, the demographic profile of borrowers whose contracts do and do not include the term. The Bureau believes the two provisions work together to allow data users to better determine whether certain borrowers are being steered towards covered credit transactions containing prepayment penalty terms.

Proposed comment 107(a)(12)(vi)–1 would elaborate on the requirement to report whether financial institutions could have included a prepayment penalty in the covered credit transaction to clarify that the applicable policies and procedures are those that the financial institutions follows when evaluating applications for the specific credit type and credit purpose requested. The Bureau believes this provision will ensure that similar credit products are being analyzed together and minimize the possibility that potential fair lending risk is incorrectly identified.

For the reasons given above, proposed § 1002.107(a)(12)(vi)(A) would require financial institutions to report whether the financial institution could have included a prepayment penalty under the policies and procedures applicable to the covered credit transaction. Proposed § 1002.107(a)(12)(vi)(B) would require financial institutions to report whether the terms of the covered credit transaction include a charge imposed for paying all or part of the transaction's principal before the date on which the principal is due.

The Bureau seeks comment on proposed § 1002.107(a)(12)(vi) and its commentary, including whether to enumerate other types of contingent charges separately in the 1071 data to more accurately reflect the cost of covered credit transactions. The Bureau also seeks comment on whether there are alternative data that would provide similar insight into whether certain borrowers are being steered into covered credit transactions containing prepayment penalty terms or other similar contingent terms.

107(a)(13) Census Tract

Background

Section 1071 requires financial institutions to collect and report ''the census tract in which is located the principal place of business of the . . . applicant.'' [616] This provision is similar to Regulation C, which requires reporting of the census tract in certain circumstances if the property securing the loan (or proposed to secure the loan, if the transaction was not originated) is in a county with a population of more than 30,000.[617] Under Regulation C, the financial institution generally finds the census tract by geocoding using the address of the property. Geocoding is the process of using a particular property address to locate its geographical coordinates and the corresponding census tract.

CRA reporting of business loans by depository institutions also requires reporting of census tract. The Bureau understands that CRA allows reporting of a census tract based on the address or location where the proceeds of the credit will be principally applied.[618]

SBREFA Proposals Under Consideration and Feedback Received

In the SBREFA Outline, the Bureau explained that it was considering proposing that financial institutions report a census tract based on an address collected in the application, or during review or origination of the loan.[619] The financial institution would use the address where the loan proceeds will principally be applied, if that address is known to the financial institution, which the Bureau believes would be more useful to carry out the community development and fair lending purposes of section 1071. For example, if a financial institution makes a loan to a small business to buy or improve commercial real estate, the location of the real estate is more relevant to section 1071's statutory purposes than the location of the main office. If the financial institution does not possess that information, the financial institution would use the location of the small business borrower's main office or headquarters. If that, too, is unknown, the financial institution could use another business address associated with the application. The financial institution would also report which of these address types it is using, unless that information is unknown: (1) The address where the loan proceeds will principally be applied; or (2) the location of the small business borrower's main office or headquarters; or (3) some other business address, including those for which the financial institution is unsure about the nature of the address.

In response to the SBREFA Outline, SERs explained that they generally capture the main office address of small business applicants, which for sole proprietors is frequently a home address; the address where the loan proceeds will be used is typically captured for commercial real estate transactions.[620] Some of the SERs stated that they do not know the proceeds address, and one suggested that for simplicity the Bureau should use the business address only.

A number of SERs explained that they have experience geocoding addresses to obtain census tract information—such as for CDFI Fund reporting, voluntary CRA reporting, or for reporting mortgage loans under HMDA—though some did not. Some SERs suggested that a requirement to report a geocoded census tract for financial institutions that do not do so now would impose costs on the financial institution and possibly the borrower. One SER stated that few nondepository institutions collect or are even familiar with census tract data. One SER recommended following the format used for CRA reporting of census tract information, rather than the slightly different format used under HMDA. Another SER suggested that the Bureau provide simple instructions for reporting census tract and employ less burdensome geocoding requirements than exist for HMDA. Several SERs explained that they use a free service available through the FFIEC to convert addresses they receive from applicants to census tract data. A few SERs suggested that the Bureau should provide or support a Federal government-sponsored system for the secure batch processing of address data to convert to census tract information that could be used to satisfy geocoding requirements across multiple reporting regimes including 1071.

[616] ECOA section 704B(e)(2)(E).

[617] Regulation C § 1003.4(a)(9)(ii)(C). Regulation C also requires reporting of the property address for all applications.

[618] *See* 2015 FFIEC CRA Guide at 16.

[619] SBREFA Outline at 30–31.

[620] SBREFA Panel Report at 29.

The SBREFA Panel recommended that the Bureau seek comment on the feasibility and ease of using existing Federal services to geocode addresses in order to determine census tract for 1071 reporting purposes (such as what is offered by the FFIEC for use in reporting HMDA data).[621]

Stakeholders commenting on the SBREFA Outline explained that financial institutions do not currently collect census tract information unless they need to report it as a CDFI, or for CRA or HMDA. Some commenters stated that they use the free FFIEC tool for geocoding, though one commenter pointed out that this service does not allow batch processing. One commenter requested that financial institutions be given a safe harbor if the tool used provides an incorrect coding. The comments, like the SER feedback, did not suggest a problem with the waterfall approach in the SBREFA Outline. There were concerns about proceeds locations not having addresses, and proceeds addresses being unknown to the financial institution, but the waterfall would allow them to simply use another address. One commenter stated that not requiring a specific type of address would help avoid burdening financial institutions. Another commenter stated that it had no reason to ask applicants about the proceeds address, and one requested that the Bureau make clear that a financial institution has no obligation to ask about the proceeds or headquarters address if it does not do so now. Several commenters stated that allowing use of the proceeds address was helpful, and would further section 1071's purposes and reduce burden by allowing use of the same data as reported under CRA. Two commenters stated that the Bureau should align this data point with the CRA, and one of these, a community development organization, stated that the CRA method for reporting census tract was easier than the HMDA method. This commenter provided statistical evidence suggesting that the CRA method also yielded more complete data than the HMDA method.

Proposed Rule

The Bureau is proposing § 1002.107(a)(13) to require financial institutions to collect and report the census tract data point using a ''waterfall'' approach, which closely aligns with the Bureau's proposal under consideration in the SBREFA Outline. The proposed rule would require a financial institution to collect and report the census tract in which is located: (i) The address or location where the proceeds of the credit applied for or originated will be or would have been principally applied; or (ii) If the information in (i) is unknown, the address or location of the main office or headquarters of the applicant; or (iii) If the information in both (i) and (ii) is unknown, another address or location associated with the applicant. In addition, the proposed rule would require that the financial institution also indicate which one of the three types of addresses or locations listed in (i), (ii), or (iii) the census tract is based on. Although the proposed rule does not specifically require it, the Bureau assumes that financial institutions or their vendors would generally use a geocoding tool to convert the appropriate address to a census tract number.

The Bureau believes that its proposed reporting method for the census tract data point leverages existing industry information collection practices and would result in useful information to further section 1071's purposes while avoiding imposing much additional burden on financial institutions. The waterfall method in the proposed regulation would achieve these goals by allowing a financial institution to report an address it already has, with no further investigation; allowing a financial institution to avoid further investigation when it is unsure about the nature of the address reported; and allowing CRA reporters to report the same address for 1071 as they do for CRA;[622] while also increasing the likelihood of the proceeds address being reported. The Bureau considers the census tract of the proceeds address to be particularly useful for both the fair lending and business and community development purposes of 1071.

First, the proposed approach would require a financial institution to report the census tract of the proceeds address if it is available, but would not require a financial institution to ask about it specifically. Financial institutions would be able to apply the waterfall approach to the addresses they are currently collecting; they would not be required to specifically ask for the proceeds or headquarters addresses. In addition, the proposed method would allow a financial institution to report that it is unsure about the nature of the address if it has no information as to the nature or function of the business address it possesses. This provision should address potential concerns about reporters spending time on complex, fact-specific questions and unintentionally misreporting this data point when financial institution staff have to determine what kind of address they are reporting based on insufficient information. The Bureau believes that this option would be particularly helpful if the application were denied or withdrawn early in the application process before the nature of any address provided by the applicant is clear.

Proposed comment 107(a)(13)–1 would provide general instructions on using the waterfall reporting method, with examples for guidance. The Bureau believes that this comment would facilitate compliance and seeks comment on whether any additional instructions or examples would be useful.

Proposed comment 107(a)(13)–2 would explain that a financial institution complies with proposed § 1002.107(a)(13) by identifying the appropriate address or location and the type of that address or location in good faith, using appropriate information from the applicant's credit file or otherwise known by the financial institution. The comment would also make clear that a financial institution is not required to investigate beyond its standard procedures as to the nature of the addresses or locations it collects. The Bureau believes that this guidance strikes the right balance by allowing flexibility in reporting, and also requiring appropriate good faith compliance in exercising that flexibility, thereby yielding quality data.

Proposed comment 107(a)(13)–3 would explain that pursuant to proposed § 1002.107(c)(1), a financial institution shall maintain procedures reasonably designed to collect applicant-provided information, which includes at least one address or location for an applicant for census tract reporting. However, the comment would further explain that if a financial institution is nonetheless unable to collect or otherwise determine any address or location for an application, the financial institution reports that the census tract information is ''not provided by applicant and otherwise undetermined.'' Based on the Bureau's understanding of how financial institutions currently define an application under their internal procedures, the Bureau believes it is highly unlikely that a financial institution would not obtain some type of address for the applicant.

[621] *Id.* at 46.

[622] As explained above, the Bureau understands that CRA allows reporting of a census tract based on the address or location where the proceeds of the credit will be principally applied. The Bureau also believes that CRA reporting on this data point is reasonably flexible, and a financial institution would be able to coordinate the two compliance regimes to report the same census tract.

Nonetheless, the Bureau is proposing to permit financial institutions to report this data point using the ''not provided by applicant and otherwise undetermined'' response in order to facilitate compliance in those rare instances when the financial institution does not have the data requested. The reference in the comment to proposed § 1002.107(c)(1) would make clear, however, that a financial institution must maintain procedures reasonably designed to collect at least one address. As with the previous comment, the Bureau believes that this comment would strike the right balance by facilitating compliance and also emphasizing the requirement to collect appropriate data.

The Bureau is proposing a safe harbor in § 1002.112(c)(1), which would state that an incorrect entry for census tract is not a violation of ECOA or subpart B if the financial institution obtained the census tract by correctly using a geocoding tool provided by the FFIEC or the Bureau. Proposed comment 107(a)(13)–4 would cross-reference that provision.[623] See the section-by-section analysis of proposed § 1002.112(c)(1) below for additional discussion of this safe harbor.

The Bureau notes that section 1071's description of the census tract data point refers to the census tract for the applicant's ''principal place of business.''[624] The Bureau considers the waterfall approach in proposed § 1002.107(a)(13) to be a reasonable interpretation of the undefined statutory term ''principal place of business,'' which the Bureau understands not to have a standard definition, and thus believes to be ambiguous. First, the Bureau believes that the address or location of the main office or headquarters of the applicant fits easily into one of the common meanings of ''principal place of business.'' In addition, the Bureau expects that, generally, the address where the loan proceeds will be applied will also be the main office or headquarters address.[625] The primary exception to this principle would be in the case of credit intended for purchase, construction/, or refinancing of real estate; under these circumstances, the Bureau reasonably interprets the term ''principal place of business'' to mean, in essence, the principal location for business activities relating to the extension of credit at issue. Although ''another address or location associated with the applicant'' may not always be the principal place of business of the applicant, the Bureau considers this information to be the financial institution's best option for reporting data on the principal place of business when the nature of a location is unknown.

In the alternative, section 1071 authorizes the Bureau to include any ''additional data that the Bureau determines would aid in fulfilling the purposes of [section 1071].'' The Bureau has determined that requiring reporting of the proceeds address would aid in fulfilling both the fair lending and business and community development purposes of section 1071 by providing more useful information on the location of the credit activity for fair lending analysis and understanding where the business and community development is occurring. Requiring reporting of another address or location associated with the applicant when both the proceeds address and the main office or headquarters address are not available would provide location data when otherwise none would be present, thus also aiding in fulfilling both the fair lending and business and community development purposes of section 1071 by providing more useful information on the location of the lending for fair lending analysis and understanding where the business and community development is likely occurring. In addition, requiring data on the nature of the address reported would aid in fulfilling both the fair lending and business and community development purposes of section 1071 by facilitating accurate analyses of the data reported. Also, in the alternative, the Bureau believes it would be appropriate to use its exception authority under 704B(g)(2) to provide that financial institutions would not report the ''main office or headquarters address'' in certain situations because the Bureau believes that the proceeds address and ''another address or location associated with the applicant'' would carry out the purposes of section 1071 more appropriately than requiring the main office or headquarters address in every situation.

As discussed above, some SERs explained that they generally collect the main office address of the small business, which for sole proprietorships will often be a home address, and are generally not aware of the proceeds address. The Bureau's proposed waterfall approach accommodates this situation by allowing financial institutions to report census tract using the address that they have. In regard to SERs' concerns about the potential burden of geocoding addresses to obtain census tract, the Bureau notes that there does not appear to be a viable alternative to collecting and reporting the statutorily required census tract data without geocoding. While several SERs are already geocoding applicants' addresses, some SERs were concerned about the burden associated with geocoding for HMDA and one expressed a preference for the CRA method of geocoding, as did several other stakeholders. Accordingly, the Bureau seeks comment on the difference between geocoding for HMDA and for CRA, and any specific advantages or disadvantages associated with geocoding under either method. In regard to a Federal government tool capable of batch processing for geocoding of addresses, the Bureau is considering the utility of such a tool. The Bureau notes that the proposed rule would provide a safe harbor for use of such a Bureau tool, if created, as well as for the currently existing FFIEC tool. As the SBREFA Panel recommended, the Bureau seeks comment on the feasibility and ease of using existing Federal services to geocode addresses in order to determine census tract for 1071 reporting purposes (such as what is offered by the FFIEC for use in reporting HMDA data).

The Bureau seeks comment on its proposed approach to the census tract data point. In addition to the specific requests for input above, the Bureau notes that the waterfall method is intended to allow CRA reporters to

[623] Proposed comment 112(c)(1)–1 would explain that ''this safe harbor provision does not extend to a financial institution's failure to provide the correct census tract number for a covered application on its small business lending application register, as required by § 1002.107(a)(13), because the FFIEC or Bureau geocoding tool did not return a census tract for the address provided by the financial institution. In addition, this safe harbor provision does not extend to a census tract error that results from a financial institution entering an inaccurate address into the FFIEC or Bureau geocoding tool.''

[624] ECOA section 704B(e)(2)(E).

[625] According to U.S. Census 2017 SUSB data, there are 5,976,761 firms with fewer than 500 employees (which will be used, for this purpose, as a rough proxy for a ''small business''); those firms collectively have 6,512,802 establishments (*i.e.,* locations). This means that, at most, approximately 9 percent of firms with fewer than 500 employees could have more than one location. *See* U.S. Census Bureau, *2017 SUSB Annual Datasets by Establishment Industry, https://www.census.gov/programs-surveys/susb/data/tables.html* (last visited Aug. 27, 2021). According to the U.S. Census Bureau's Non-employer Statistics, there are 25,701,671 non-employer firms (regardless of revenue size). Non-employer firms account for fewer than 4 percent of all sales, though, and the vast majority are sole proprietorships. While not impossible, the Bureau believes it is very unlikely that non-employer firms would have more than one location. *See* U.S. Census Bureau, *All Sectors: Nonemployer Statistics by Legal Form of Organization and Receipts Size Class for the U.S., States, and Selected Geographies: 2017* (2017), *https://data.census.gov/cedsci/table?q=NONEMP2017.NS1700NONEMP&tid=NONEMP2017.NS1700NONEMP&hidePreview=true.*

provide the same data for both reporting regimes, but requests comment on whether the proposed method would achieve this goal and, if not, whether and how this data point should be further coordinated with CRA.

107(a)(14) Gross Annual Revenue

Background

Section 1071 requires financial institutions to collect and report ''the gross annual revenue of the business in the last fiscal year of the . . . applicant preceding the date of the application.'' [626]

SBREFA Proposal Under Consideration and Feedback Received

In the SBREFA Outline, the Bureau stated that it was considering proposing that financial institutions report the gross annual revenue of the applicant during its last fiscal year.[627] The Bureau stated that if a financial institution verifies gross annual revenue and bases its credit decision on that amount, the financial institution would report the verified amount. If the financial institution does not verify gross annual revenue, it would report the amount provided by the applicant.

Many SERs indicated that they collect gross annual revenue information, although they differed in how much they seek to verify this information.[628] Several SERs requested clarification regarding how gross annual revenue would be reported for startups and other young businesses. A few SERs stated that they do not capture gross annual revenue at all or collect it only in limited circumstances. One of these SERs stated that collecting gross annual revenue would be challenging; others suggested they could likely estimate gross annual revenue based on information they do collect.

Several SERs explained that they collect gross annual revenue using different methods and forms of verification for different types of credit. SERs advocated for allowing gross annual revenue to be reported as provided by the applicant, without an obligation for the financial institution to verify that information. A few SERs suggested that applicants often cannot provide accurate gross annual revenue information, although one SER suggested that in its experience applicants are generally able to provide reasonable estimates of gross annual revenue. Several SERs preferred reporting ranges rather than precise values. Several SERs also remarked that most businesses take advantage of tax filing extensions and thus typically do not have complete financial information for the prior year until many months later, and asked how that situation should be addressed when requesting applicants' gross annual revenue for the prior fiscal year.

The SBREFA Panel recommended that, in light of SER feedback supporting the Bureau's proposal under consideration to not require financial institutions to verify gross annual revenue information, the Bureau proceed with that approach in the proposal. The SBREFA Panel also recommended that the Bureau explore the timing of tax and revenue reporting and seek comment in the proposal on how that timing can best be coordinated with the collection and reporting of this data point.[629]

The Bureau also received feedback from other stakeholders. Although one stakeholder commented that gross annual revenue is a consistent measure, simple to define, and easily computed, other stakeholders were concerned about the complexity and difficulty of reporting a specifically defined revenue number. One stakeholder stated that gross annual revenue was difficult to precisely define given differences in accounting and tax practices both across and within business subsectors. Two commenters suggested that reporting this data point would be complicated by the question of whether a business uses cash flow or accrual accounting. Other stakeholders requested the reporting of revenue ranges rather than specific values, and one of these commenters suggested that reporting a specific number may discourage some borrowers from applying. Another stakeholder explained that sometimes an application is denied or withdrawn before the revenue information is collected. One stakeholder stated that allowing flexibility in the collection and reporting of this data point would be very important.

With regard to whether the revenue of affiliates is included in the gross annual revenue they collect and whether that information is used for underwriting purposes, stakeholders reported that some collect this information and some do not, depending on the application and specific product. One commenter stated that it does not collect such information unless the affiliate will be liable on the loan. Two stakeholders stated that the Bureau must require inclusion of affiliate revenue to make sure that a given business truly is small.

Many stakeholders stated that they generally verify the income information using profit and loss statements, taxes, bank statements, and ''third-party technology solutions.'' Some stated that they do not verify revenue information for specific products, such as credit cards, and that sometimes it is difficult to verify the revenue of a particular applicant, as tax information can be complex or dated. Stakeholders overwhelmingly supported the Bureau's proposal under consideration not to require verification of revenue, and one stakeholder objected to requiring the reporting of verified information even when the lender has verified the revenue.

Stakeholders also expressed concern about collecting gross annual revenue for start-ups and very small businesses that might not have useable or clear information. One stakeholder explained that its members may obtain and rely on applicant bank statements for a specified time period, and so should be permitted to extrapolate annual revenue based on partially reported revenue.

Proposed Rule

Proposed § 1002.107(a)(14) would require reporting of the gross annual revenue of the applicant for its preceding full fiscal year prior to when the information is collected. The Bureau is proposing to require reporting of a specific value for gross annual revenue—rather than a range, for which some SERs and stakeholders expressed a preference—to simplify the reporting of gross annual revenue information for financial institutions and because it believes that a precise value would be more useful for 1071 data users, including the Bureau.

Consistent with the SBREFA Panel's recommendation and feedback from SERs and other stakeholders, proposed comment 107(a)(14)–1 would clarify that a financial institution need not verify gross annual revenue information provided by the applicant to comply with proposed § 1002.107(a)(14). The proposed comment would explain that the financial institution may rely on statements of or information provided by the applicant in collecting and reporting gross annual revenue. The proposed comment would also state, however, that if the financial institution verifies the gross annual revenue provided by the applicant it must report the verified information. The Bureau believes that a requirement to verify gross annual revenue could be operationally difficult for many financial institutions, particularly in situations in which the financial institution does not collect gross annual

[626] ECOA section 704B(e)(2)(F).

[627] SBREFA Outline at 31.

[628] SBREFA Panel Report at 29.

[629] *Id.* at 46.

revenue currently. The Bureau also does not believe, at this time, that such a requirement is necessary in fulfilling either of section 1071's statutory purposes. However, the Bureau does believe that reporting verified revenue when the financial institution already possesses that information would not be operationally difficult, and would enhance the accuracy of the information collected.

Proposed comment 107(a)(14)–1 would also provide specific language that a financial institution could use to ask about an applicant's gross annual revenue and would explain that a financial institution could rely on the applicant's answer. The Bureau believes this language would facilitate compliance for financial institutions that currently do not collect gross annual revenue, collect it only in limited circumstances, or would otherwise find its collection challenging, as some SERs and other stakeholders suggested.

Overall, the Bureau believes that this approach in proposed comment 107(a)(14)–1—clarifying that a financial institution need not verify applicant-provided gross annual revenue information, and providing language that a financial institution may use to ask for such information—should reduce the complexity and difficulty of collecting gross annual revenue information that some SERs and stakeholders expressed concern about.

The Bureau believes that situations could arise in which the financial institution has identified that an applicant is a small business for the purposes of proposed § 1002.106(b) through, for example, an initial screening question asking whether the applicant's gross annual revenue is below $5 million, but then the specific gross annual revenue amount could not be collected. Therefore, the Bureau is proposing comment 107(a)(14)–2, which would first clarify that pursuant to proposed § 1002.107(c)(1), a financial institution shall maintain procedures reasonably designed to collect applicant-provided information, including the gross annual revenue of the applicant. The proposed comment would then state that if a financial institution is nonetheless unable to collect or determine the specific gross annual revenue of the applicant, the financial institution reports that the gross annual revenue is ''not provided by applicant and otherwise undetermined.'' The Bureau believes that permitting this reporting flexibility would reduce the complexity and difficulty of reporting gross annual revenue information, particularly when an application has been denied or withdrawn early in the process and the gross annual revenue could not be collected.

Proposed comment 107(a)(14)–3 would clarify that a financial institution is permitted, but not required, to report the gross annual revenue for the applicant that includes the revenue of affiliates as well. The proposed comment would state that, for example, if the financial institution does not normally collect information on affiliate revenue, the financial institution reports only the applicant's revenue and does not include the revenue of any affiliates when it has not collected that information. The Bureau believes that permitting, but not requiring, a financial institution to include the revenue of affiliates will carry out the purposes of section 1071 while reducing undue burden on financial institutions in collecting gross annual revenue information. Proposed comment 107(a)(14)–3 would conclude by explaining that in determining whether the applicant is a small business under proposed § 1002.106(b), a financial institution may rely on an applicant's representations regarding gross annual revenue, which may or may not include affiliates' revenue. The Bureau notes that proposed comment 106(b)–3 would follow the same approach to affiliate revenue for purposes of determining whether an applicant is a small business under proposed § 1002.106(b). The Bureau believes that this operational equivalence between proposed § 1002.107(a)(14) and proposed § 1002.106(b) would facilitate compliance and enhance the consistency of 1071 data.

As mentioned above, some SERs suggested they might be able to estimate gross annual revenue using information that they now collect, and one stakeholder suggested that it could extrapolate annual revenue based on partially reported revenue. The Bureau does not currently believe that estimation or extrapolation would be likely to result in sufficiently accurate data for reporting under proposed § 1002.107(a)(14). For example, a seasonal business's bank statements for its busy season would likely yield an inflated gross annual revenue when extrapolated to a full year. In addition, the Bureau believes that the language presented in proposed comment 107(a)(14)–1 would provide a manageable method for collecting full gross annual revenue when a financial institution does not do so now. Nonetheless, the Bureau seeks comment on whether financial institutions should be permitted to estimate or extrapolate gross annual revenue from partially reported revenue or other information, and how such estimation or extrapolation would be carried out. The Bureau also notes that estimation or extrapolation of gross annual revenue is sufficient for the purposes of determining small business status under proposed § 1002.106(b), subject to the requirement under proposed comment 107(a)(14)–1 that a financial institution must report verified gross annual revenue information if available.

The Bureau seeks comment on its proposed approach to the gross annual revenue data point, as well as the specific requests for comment above. As the SBREFA Panel recommended, the Bureau also seeks comment on how the timing of tax and revenue reporting can best be coordinated with the collection and reporting of gross annual revenue. In addition, the Bureau seeks comment on the effect of cash flow versus accrual accounting on reporting of gross annual revenue.

107(a)(15) NAICS Code

ECOA section 704B(e)(2)(H) authorizes the Bureau to require financial institutions to compile and maintain ''any additional data that the Bureau determines would aid in fulfilling the purposes of [section 1071].'' The Bureau is proposing in § 1002.107(a)(15) to require that financial institutions collect and report an applicant's 6-digit NAICS code. The Bureau believes that 6-digit NAICS code data would aid in fulfilling the purposes of section 1071, as explained below.

As described above, the SBA customizes its size standards on an industry-by-industry basis using 1,057 6-digit NAICS codes. The first two digits of a NAICS code broadly capture the industry sector of a business. The third digit captures the industry's subsector, the fourth captures the industry group, the fifth captures the industry code, and the sixth captures the national industry. The NAICS code thus becomes more specific as digits increase and the 6-digit code is the most specific. In its SBREFA Outline, the Bureau stated that it was considering proposing that financial institutions collect and report NAICS code as an important metric for fair lending analysis (allowing separation of dissimilar types of businesses to limit misinterpretations of the data) and assessing community development impacts (allowing better measurement of community development impact).[630]

As described in detail in the section-by-section analysis of proposed § 1002.106(b) above, SERs and other

[630] SBREFA Outline at 35.

stakeholders expressed concern about the difficulties in determining the appropriate NAICS code for businesses and in applying the NAICS-based standards in determining whether a business loan applicant is a small business.[631] In addition, several SERs stated that correctly classifying an applicant's NAICS code can be difficult, as the business may change over time, codes may have overlapping definitions, small businesses often do not know their NAICS code or may operate in multiple NAICS sectors, and classifications may be prone to human error. Another SER noted that NAICS codes classifications could be subject to change based on SBA rulemaking, and thus financial institutions would need to track such developments. Other SERs stated that the 2-digit NAICS code is significantly less complex and prone to less human error than the SBA definition using 6-digit NAICS codes.

The SBREFA Panel recommended that the Bureau continue to explore ways to minimize burden on both the small financial institutions collecting NAICS code information as well as the small business applicants who need to provide it, for example the possibility of collecting the 2–NAICS code rather than the 6-digit code.[632]

Proposed § 1002.107(a)(15) would require financial institutions to collect and report a 6-digit NAICS code appropriate for the applicant's business. Proposed comment 107(a)(15)–1 would provide general background on NAICS codes and would state that a financial institution complies with proposed § 1002.107(a)(15) if it uses the NAICS codes in effect on January 1 of the calendar year covered by the small business lending application register that it is reporting. Proposed comment 107(a)(15)–2 would clarify that, when a financial institution is unable to collect or determine the applicant's NAICS code, it reports that the NAICS code is ''not provided by applicant and otherwise undetermined.''

The Bureau is also proposing that financial institutions be permitted to rely on NAICS codes obtained from the applicant or certain other sources, without having to verify that information itself. Specifically, proposed comment 107(a)(15)–3 would clarify that, consistent with proposed § 1002.107(b), a financial institution may rely on applicable applicant information or statements when compiling and reporting the NAICS code and would provide an example of an applicant providing a financial institution with the applicant's tax return that includes the applicant's reported NAICS code. Proposed comment 107(a)(15)–4 would provide that a financial institution may rely on a NAICS code obtained through the financial institution's use of business information products, such as company profiles or business credit reports, which provide the applicant's NAICS code.

The Bureau believes that NAICS codes would considerably aid in fulfilling both section 1071's fair lending purpose and its business and community development purpose, even if having NAICS code is not necessary for determining whether an applicant is a small business under the Bureau's proposed alternative size standard. The Bureau believes that capturing 6-digit NAICS codes in the 1071 data would facilitate enforcement of fair lending laws. For example, financial institutions often designate certain industries as high-risk, such as industries that have high rates of businesses leaving the market or that deal primarily in cash transactions. The 6-digit NAICS codes would help ensure that users are comparing applicants with similar profiles, thereby controlling for factors that might provide non-discriminatory explanations for disparities in credit and pricing decisions. Moreover, NAICS codes would be useful for identifying business and community development needs and opportunities of small businesses, which may differ widely based on industry, even controlling for other factors. For example, 6-digit NAICS codes would help data users identify industries where small businesses face challenges accessing credit and understand how small businesses in different industries use credit. Furthermore, disclosing NAICS codes would provide for consistency and compatibility with other public datasets related to small business lending activity, which generally use NAICS codes. This ability to synthesize 1071 data with other datasets would help the public use the data in ways that advance both the business and community development and fair lending purposes of section 1071.

The Bureau believes that collecting the full 6-digit NAICS code (as opposed to the 2-digit sector code) would better enable the Bureau and other stakeholders to drill down and identify whether disparities arise at a sector level or more specifically at a U.S. National Industry level and would also enable the collection of better information on the specific types of businesses that are accessing, or struggling to access, credit. For example, a wide variety of businesses, including those providing car washes, footwear and leather goods repair, and nail salons, all fall under the 2-digit sector code 81: Other Services (except Public Administration). Without 6-digit NAICS codes, all of these business types would be combined into one analysis, potentially masking different characteristics and different outcomes across these business types.

The Bureau recognizes that, under its proposal, all financial institutions subject to reporting would need to gain familiarity with the NAICS code system, refer to NAICS classifications for all relevant applications, and report NAICS codes to the Bureau. To address commenter concerns related to the complexity of determining a correct NAICS code, the Bureau is proposing (1) a safe harbor to indicate that an incorrect NAICS code entry is not a violation of subpart B if the first two digits of the NAICS code are correct and the financial institution maintains procedures reasonably adapted to correctly identify the subsequent four digits (see proposed § 1002.112(c)(2)); (2) permitting a financial institution to rely on applicable applicant information or statements when compiling and reporting the NAICS code (see proposed comment 107(a)(15)–3); and (3) permitting a financial institution to rely on a NAICS code obtained through the financial institution's use of business information products, such as company profiles, business credit reports, or NAICS identification tools (see proposed comment 107(a)(15)–4). The proposed NAICS-specific safe harbor would be available to financial institutions in addition to the general bona fide error exemption under proposed § 1002.112(b). See the section-by-section analysis of proposed § 1002.112(c)(2) below for a detailed discussion of the proposed safe harbor.

The Bureau seeks comment on its proposal to collect 6-digit NAICS codes together with the safe harbor described in proposed § 1002.112(c)(2). The Bureau also seeks comment on whether requiring a 3-digit NAICS code with no safe harbor would be a better alternative.

107(a)(16) Number of Workers

Background

ECOA section 704B(e)(2)(H) authorizes the Bureau to require financial institutions to compile and maintain ''any additional data that the Bureau determines would aid in fulfilling the purposes of [section 1071].'' The Bureau believes that data providing the number of persons

[631] SBREFA Panel Report at 31.

[632] *Id.* at 46.

working for a small business applicant would aid in fulfilling the business and community development purpose of section 1071. These data would allow users to better understand the job maintenance and creation that small business credit is associated with and help track that aspect of business and community development.

SBREFA Proposal Under Consideration and Feedback Received

In the SBREFA Outline, the Bureau stated that it was considering proposing that financial institutions collect and report the number of employees of the applicant. The Bureau stated that it was considering proposing that if the financial institution verifies the number of employees provided by the applicant, the financial institution would report the verified number. On the other hand, if the financial institution does not verify the number of employees, it would report the number provided by the applicant.

Many SERs indicated that they do not collect number of employees.[633] One of these SERs stated that they do not support the inclusion of this data point in an eventual 1071 rule, although they could collect this information. Several SERs suggested that there could be particular complexities in accurately capturing this information, particularly regarding how part-time and seasonal employees and contractors should be counted. Some SERs stated that they collect number of employees but do not verify that information.

The SBREFA Panel recommended (with respect to both the time in business and number of employees data points), that if these data points become part of the proposal, the Bureau continue to explore ways to minimize the burden to small financial institutions of collecting and reporting these data points.[634]

A large majority of industry stakeholders commenting on the SBREFA Outline opposed the inclusion of any of the discretionary data points, including number of employees. One trade association stated that this data point would frustrate small business applicants, particularly if they have to apply full-time employee calculation formulas. Several stakeholders discussed the difficulty of defining a number of employees data point, suggesting that complex rules would be necessary for how to count part-time and seasonal employees, as well as contractors. Another commenter suggested that verifying this information would be extremely difficult. Industry commenters also explained that most financial institutions do not collect this information now, and several pointed out that these data are not useful for evaluating credit risk. Another stated that number of employees is not a meaningful figure across industries, given the use of contractors and part-time employees. One commenter pointed out that the many sole proprietorships and non-employee firms mean that this number will often be zero. One financial institution stated that it does collect this information now, but does not verify it.

Community groups were strongly in favor of including a number of employees data point. One group stated that the number of employees data would help provide a greater understanding of microbusinesses, typically defined in terms ranging from less than five to ten employees, one or more of whom is the owner. Another suggested that the Bureau collect the total number of employees and number of owners separately, which it said would avoid the problem found in PPP data where owners mistakenly reported themselves as employees. This same commenter stated that user testing and guidance would be necessary to ensure that the number of employees is reported accurately and consistently. However, one community development fund that supported the collection of the other discretionary data points opposed collection of the number of employees. This stakeholder stated that there is little research support for direct job creation/retention as the primary impact of small business assistance, and that the scholarly consensus suggests the economic impacts of small firms are related to their capacity to improve local entrepreneurial networks and create ecosystems that are desired and sought out by bigger firms. The commenter then stated that by having covered financial institutions report on job counts, the Bureau would be implicitly reinforcing the inaccurate notion that employment is a key dimension of small business assistance.

Proposed Rule

Proposed § 1002.107(a)(16) would require financial institutions to report the number of non-owners working for the applicant. Although some SERs and other stakeholders questioned the usefulness of employment data for 1071's purposes, the Bureau continues to believe that this information would be particularly helpful in fulfilling the business and community development purpose of section 1071. Information on the number of workers should help data users assess community development impacts by allowing better understanding of the number of jobs affected. In addition, in order to avoid mistaken over-reporting of workers, the proposed regulation would make clear that only non-owners would be reported as workers.

Proposed comment 107(a)(16)–1 would discuss the collection of the number of workers. As discussed above, several SERs and other stakeholders suggested that there could be particular complexities in accurately capturing this information, particularly regarding how part-time and seasonal workers and contractors should be counted. To help alleviate these concerns, the proposed comment would state that in collecting the number of workers from an applicant, the financial institution would explain that full-time, part-time, and seasonal workers, as well as contractors who work primarily for the applicant, would be counted as workers, but principal owners of the business would not. If asked, the financial institution would explain that volunteers would not be counted as workers. This treatment of part-time, seasonal, contract, and volunteer workers would follow the SBA's method for counting employees,[635] with minor simplifications. The Bureau believes that this guidance would allow financial institutions that originate SBA-guaranteed loans to use the same number of workers data for both the loan guarantee program and 1071 reporting. The Bureau seeks comment on whether further modifications to the number of workers data point are needed to facilitate this operational simplification.

Proposed comment 107(a)(16)–1 would also explain that workers for affiliates of the applicant would only be counted if the financial institution were also collecting the affiliates' gross annual revenue. The Bureau believes that this coordination between these two data points would facilitate compliance and yield more consistent data.

The proposed comment would further explain that the financial institution may rely on statements of or information provided by the applicant in collecting and reporting number of workers, but if the financial institution verifies the number of workers provided by the applicant, it must report the verified information. This guidance would address the concerns raised about the difficulty of verification. The Bureau believes that allowing financial institutions to rely on applicant-

[633] *Id.* at 31.

[634] *Id.* at 46.

[635] *See* 13 CFR 121.106(a).

provided information will sufficiently safeguard accuracy such that the resulting data will aid in fulfilling the purposes of 1071. However, the Bureau also believes that reporting the verified number of workers when the financial institution already possesses that information would not be operationally difficult, and would enhance the accuracy of the information collected.

Finally, proposed comment 107(a)(16)-1 would also provide sample language that a financial institution could use to ask about the number of workers, if it does not collect the number of workers by another method. The Bureau understands that, as discussed above, financial institutions engaged in SBA lending are already collecting employee information to apply the SBA's size standards. However, SBA lending represents only a small percentage of the small business credit market. Given the difficulty for financial institutions in potentially requesting this information of all applicants, the Bureau provides the sample language in the proposed comment, which implements the simplified version of the SBA definition presented earlier in the proposed comment. The Bureau believes that permitting use of the model question would facilitate compliance. The Bureau seeks comment on this method of collection, and on the specific language proposed.

Proposed comment 107(a)(16)–2 would first clarify that a financial institution shall maintain procedures reasonably designed to collect applicant-provided information, including the number of workers of the applicant. The proposed comment would then state that if a financial institution is nonetheless unable to collect or determine the number of workers of the applicant, the financial institution reports that the number of workers is ''not provided by applicant and otherwise undetermined.'' The Bureau believes that this approach would reduce the burden on financial institutions that are unable to collect or determine the number of workers of the applicant, particularly when an application is denied or withdrawn early in the application process.

The Bureau seeks comment on its proposed approach to the number of workers data point, as well as on the specific requests for comment above. The Bureau also seeks comment on whether financial institutions collect information about the number of workers from applicants using definitions other than the SBA's, and how the collection of this data point could best be integrated with those collections of information.

107(a)(17) Time in Business

Background

ECOA section 704B(e)(2)(H) authorizes the Bureau to require financial institutions to compile and maintain ''any additional data that the Bureau determines would aid in fulfilling the purposes of [section 1071].'' The Bureau believes that data providing the time in business of a small business applicant would aid in fulfilling both the business and community development and fair lending purposes of section 1071, as explained below.

SBREFA Proposal Under Consideration and Feedback Received

In the SBREFA Outline, the Bureau stated that it was considering proposing to include as a discretionary data point time in business of the applicant (as of the date of application), expressed in years, or months if less than one year.[636] The Bureau stated that time-in-business information could help explain differences in underwriting risk among small business applicants and thus avoid misinterpretation of the section 1071 dataset by distinguishing potentially riskier new businesses from less risky established businesses. Time-in-business information could also provide a better measurement of community development effects, in terms of number of start-ups or other relatively new businesses seeking and obtaining financing. The Bureau stated that a financial institution may choose to verify the time in business provided by an applicant as part of its normal course of business. If the financial institution does not verify the time in business provided by the applicant, the financial institution would report the time in business provided by the applicant. If the financial institution does verify the time in business provided by the applicant, it would report the verified information.

Many SERs currently collect time-in-business information, explaining that time-in-business information is valuable for measuring risk in underwriting.[637] However, some SERs collect this information on their application forms or keep it as part of a general narrative in a credit memorandum about the application, but do not retain it as a specific data field in their systems. Some SERs capture time-in-business information by recording the year, or month/day/year, of incorporation; others capture it as the number of years the applicant has been in business. One SER stated that they do not support the inclusion of time in business as a data point in the NPRM, although they could collect this information.

Several SERs stated that they use State incorporation filings to determine or verify time in business. Some SERs explained that they view a business as a start-up if it has been in business either less than two or less than three years. For one SER, time in business is relevant for the specific line of business for which financing is sought, rather than the length of time the applicant has been in some business generally. Another SER suggested that the Bureau use ranges for time-in-business reporting, similar to a suggested method for collecting and reporting gross annual revenue.

The SBREFA Panel recommended (with respect to both the time in business and number of employees data points), that if these data points become part of the proposal, the Bureau continue to explore ways to minimize the burden to small financial institutions of collecting and reporting these data points.[638]

Community group stakeholders supported the inclusion of the time-in-business data point, stating that start-ups and younger businesses often face challenges accessing credit, and having time-in-business data would be especially critical to exploring gender and racial disparities and fostering equitable access to affordable loan capital. Two industry stakeholders supported inclusion, stating that time in business is a key underwriting factor and could explain credit disparities. One community group stakeholder agreed, stating that time in business and other discretionary data points must be accounted for so credit providers cannot, as they said HMDA reporters have done for years, hide behind data not collected as justification for their lending disparities.

A large majority of industry stakeholders opposed all discretionary data points, including time in business. One industry stakeholder focused specifically on the time-in-business data point, stating that there are too many variables in the data point to be easily and clearly defined for collection. That stakeholder provided examples of complications in collection of the data point, such as (1) the time the entity has existed or existed under the current ownership, (2) how much experience the owners have had in this business or closely related fields, (3) if the

[636] SBREFA Outline at 34–35.

[637] SBREFA Panel Report at 31.

[638] *Id.* at 46.

experience is in closely related fields how close must they be, (4) whether the entity has history but is being purchased using loan funds by ownership with little experience, and (5) whether industry should report how long the existing management structure has been in place. It then requested that the Bureau drop this data point or make the options very simple.

Industry stakeholders reported different ways that they currently collect and use time-in-business information. Stakeholders report that the information is not universally collected and may be collected using different formats, even within a single institution. A trade association suggested that reporting time in business should be optional. One stakeholder said that it verifies the data using Secretary of State or other third-party information, and that an applicant that does not meet the time-in-business requirement for a product may be automatically rejected. Two other stakeholders stated that they focus on the overall experience of the ownership or management, rather than the age of the business.

Proposed Rule

Proposed § 1002.107(a)(17) would require a financial institution to collect and report the time the applicant has been in business, described in whole years, as relied on or collected by the financial institution. Proposed § 1002.107(a)(17) would require the data be reported in whole years, rather than ranges of time, as suggested by a SER and a stakeholder, because a financial institution would have a definite number of years if it collects this information, and the Bureau believes that would make the data more granular and useful.

The Bureau continues to believe that time in business would likely advance both statutory purposes of 1071. Research illustrates, and commenters have emphasized, the role that start-ups and new businesses play in the business ecosystem and in promoting important community development aims, such as creating new jobs.[639] Financial institutions often have special credit policies regarding start-ups and other young businesses, including whether the institution will extend credit to start-ups at all, the type(s) of credit products start-ups and new businesses can apply for, and the amount of credit for which they can be approved. Studies generally show that start-ups experience greater difficulty in accessing credit,[640] and one community group stakeholder made the same point. In addition, one study suggested that Black- and Hispanic-owned firms are under-represented in terms of firms that have external financing, have lower levels of liquidity in their early years, and have higher rates of exiting the market within the first three years.[641] In regard to the facilitation of fair lending analyses, time-in-business data would provide a useful control in fair lending analyses to identify similarly situated applicants and eliminate some false positives, while also allowing monitoring of potential disparate treatment of minority- and women-owned start-ups and relatively new businesses. In addition, many SERs reported that time-in-business information is valuable for measuring risk in underwriting, and they did not limit this observation to start-ups and new businesses. The Bureau also believes that collecting time-in-business information generally, rather than in the first few years, would provide useful data for understanding the relative maturity of small businesses in different communities.

The Bureau believes that time-in-business data would benefit data users, including financial institutions, policymakers, and communities. Such data would allow data users to better identify the proportion of small businesses seeking credit that are start-ups or relatively new businesses, the type(s) of credit that is offered and provided to start-ups and newer businesses, the geographic makeup of those businesses, the types of financial institutions that are reaching such businesses, and where communities might focus business development efforts. The data may also aid policymakers in addressing issues impacting the growth of small start-ups. The data, particularly as to unmet demand, could help interested financial institutions identify lending opportunities to reach more start-ups and new businesses, promoting both business and community development.

In addition, as some of the stakeholders suggested, the Bureau believes that the inclusion of time-in-business data could help mitigate the concerns of data misrepresentation. For example, data indicating that a small business applicant is a start-up with little experience or financial history could provide a legitimate business explanation for why the financial institution denied the application or approved it for less credit than was applied for. Therefore, time-in-business data may help to explain the credit decision made by a financial institution, which may address any concerns of data misrepresentation.

The Bureau is not proposing to make this data field optional, as suggested by a trade association. The Bureau is concerned that, if it were to do so, very little data would be reported.

As explained above, the SBREFA Panel recommended that the Bureau explore ways to minimize the burden on small financial institutions of collecting and reporting the time-in-business data point. SERs and industry stakeholders reported different ways that they currently collect and use time-in-business information, reporting that the information is not universally collected and may be collected using different formats, even within a single institution. The Bureau believes that by allowing financial institutions to report the time in business that they *relied on* in making their credit decisions, the burden on the financial institution (of any size) could be reduced, while the resulting information would still aid in fulfilling the purposes of section 1071. Although industry commenters overwhelmingly expressed concern about the burden associated with any discretionary data points as a general matter, the Bureau believes that time-in-business information can be made relatively easy for financial institutions to collect if the Bureau leverages the methods currently in use by individual financial institutions. As the SERs and stakeholders explained, many or possibly most financial institutions already collect time-in-business information for underwriting purposes or to determine general eligibility, though the format and specific information collected vary by institution[642] and may relate to owner

[639] *See, e.g.,* Small Bus. Admin., *2018 Small Business Profiles,* at 1–2 (2018), *https://www.sba.gov/advocacy/2018-small-business-profiles-states-and-territories?utm_medium=email&utm_source=govdelivery*; John Haltiwanger *et al., Who Creates Jobs? Small versus Large versus Young,* The Review of Economics and Statistics, 95(2), at 347–61 (2013), *https://direct.mit.edu/rest/article/95/2/347/58100/Who-Creates-Jobs-Small-versus-Large-versus-Young.*

[640] For example, a Federal Reserve Bank of New York report, based on data from the 2016 Small Business Credit Surveys that included information from 12 Federal Reserve Banks, provides statistics on how start-ups are less likely to receive credit as compared to mature businesses, even with comparable credit scores. *See* Fed. Reserve Bank of N.Y., *Small Business Credit Survey: Report on Start-up Firms,* at iv (2017), *https://www.newyorkfed.org/medialibrary/media/smallbusiness/2016/SBCS-Report-StartupFirms-2016.pdf.*

[641] J.P. Morgan Chase, *Small Business Owner Race, Liquidity and Survival* (July 2020), *https://www.jpmorganchase.com/content/dam/jpmc/jpmorgan-chase-and-co/institute/pdf/institute-small-business-owner-race-report.pdf.*

[642] Of a limited sample of application forms the Bureau reviewed from a variety of types of financial institutions, a majority of forms contained some type of time-in-business field. When the Bureau

or management experience rather than business longevity. Therefore, the Bureau is proposing that financial institutions that collect time-in-business information be required to report the time in business that they relied on (or would have relied on, for applications that were withdrawn prior to a credit decision) in making the credit decision. If the financial institution collects time-in-business information that reflects owner or management experience rather than business longevity, the financial institution would report time in business using the number it collects and relies on reflecting owner or management experience. If the financial institution relies on verified information, it reports the verified information. If it does not verify the information, it reports the unverified information. Requiring reporting of time in business ''relied on'' should avoid requiring financial institutions that collect some version of this information to change their practices or add extra procedures to collect the Bureau's version of time in business. In addition, the Bureau believes that collecting the actual information used by the financial institution to evaluate the application would aid fair lending analysis. Furthermore, the Bureau does not believe that the variations among the data collected by individual institutions would interfere with the business and community development purpose of 1071, because the information would still be useful in identifying new ownership, management, and businesses that may face credit challenges.

In addition to providing some financial institutions with the ability to avoid duplicative information gathering by simply reporting the time in business relied on, the proposed data point would also facilitate compliance for financial institutions that do not currently collect or rely on time-in-business information by allowing them to use the specific question provided in proposed comment 107(a)(17)–4, as explained below. The Bureau believes that permitting these two proposed methods for collection and reporting should accommodate different institutional practices and reduce operational difficulty for financial institutions in reporting this data point.

In order to clarify the potential use of the two methods (relied on or collected) of reporting for the time-in-business data point, proposed comment 107(a)(17)–1 would provide guidance on how to report using either method. The proposed comment would explain that, regardless of which method is used, the financial institution must report the time in business in whole years, or indicate if a business has not begun operating yet, or has been in operation for less than a year. The Bureau believes that this reporting format would inform data users of the maturity of the applicant businesses and signal which are start-ups.

Proposed comment 107(a)(17)–1 would further explain that when the financial institution relies on an applicant's time in business as part of a credit decision, it reports the time in business relied on in making the credit decision. However, the comment would further explain that proposed § 1002.107(a)(17) would not require the financial institution to rely on an applicant's time in business in making a credit decision. The Bureau believes that this guidance would make clear that the requirement to collect and report applicants' time in business would not change the financial institution's internal business practices. A financial institution would only be required to report the time in business relied on in making the credit decision if the financial institution actually does rely on an applicant's time in business in making its credit decision.

Proposed comment 107(a)(17)–1 would also explain that the financial institution may rely on statements or information provided by the applicant in collecting and reporting time in business; however, pursuant to proposed § 1002.107(b), if the financial institution verifies the time in business provided by the applicant, it must report the verified information. This guidance would apply whether the financial institution relies on the time in business in making its credit decision or not, although the Bureau believes that verification would be very uncommon when the financial institution is not relying on the information. The Bureau believes that allowing financial institutions to rely on applicant-provided information will sufficiently safeguard accuracy such that the resulting data will aid in fulfilling the purposes of 1071. However, the Bureau also believes that reporting the verified time in business when the financial institution already possesses that information would not be operationally difficult, and would enhance the accuracy of the information collected and ensure that it was the information that the financial institution relied on in making the credit decision.

Proposed comment 107(a)(17)–2 would provide instructions on how to report the time in business relied on in making the credit decision. The proposed comment would state that when a financial institution evaluates an applicant's time in business as part of a credit decision, it reports the time in business relied on in making the credit decision. For example, the proposed comment would further explain, if the financial institution relies on the number of years of experience the applicant's owners have in the current line of business, the financial institution reports that number of years as the time in business. Similarly, if the financial institution relies on the number of years that the applicant has existed, the financial institution reports the number of years that the applicant has existed as the time in business. Proposed comment 107(a)(17)–2 would then conclude by stating that a financial institution reports the length of business existence or experience duration that it relies on in making its credit decision, and is not required to adopt any particular definition of time in business. The Bureau believes that this proposed comment would provide useful guidance on how a financial institution complies with § 1002.107(a)(17) when it relies on time in business and would help such financial institutions avoid unnecessary compliance difficulties by reporting information that they already possess.

Proposed comment 107(a)(17)–3 would state that a financial institution relies on an applicant's time in business in making a credit decision if the time in business was a factor in the credit decision, even if it was not a dispositive factor. The comment would provide the example that if the time in business is one of multiple factors in the financial institution's credit decision, the financial institution has relied on the time in business even if the financial institution denies the application because one or more underwriting requirements other than the time in business are not satisfied. The Bureau believes that this guidance would help financial institutions to understand how to comply correctly with proposed § 1002.107(a)(17).

Proposed comment 107(a)(17)–4 would clarify that if the financial institution does not rely on time in business in considering an application, pursuant to proposed § 1002.107(c)(1) it shall still maintain procedures reasonably designed to collect applicant-provided information, which

looked at lenders that have undergone a small business fair lending exam from the Bureau, a few (but not the majority) maintained data on time in business in their existing systems. Examples of time-in-business reference points include time of formation or registration, time under current ownership, and history of financial records, recorded as either month and year or just year.

includes the applicant's time in business. The proposed comment would explain that in collecting time in business from an applicant, the financial institution complies with proposed § 1002.107(a)(17) by asking for the number of years that the applicant has been operating the business it operates now. The proposed comment would further explain that when the applicant has multiple owners with different numbers of years operating that business, the financial institution collects and reports the greatest number of years of any owner. As discussed above, the Bureau believes that providing this clear instruction on how to collect the time in business when a financial institution does not do so now would avoid the potential complications and difficulties described by the SERs and industry stakeholders in collecting this data point. In addition, the Bureau notes that, as would be made clear in proposed comment 107(a)(17)–1, a financial institution would not need to verify an applicant's response to the inquiry. Proposed comment 107(a)(17)–4 would then conclude by making clear that the financial institution does not need to comply with the instruction if it collects and relies on the time in business by another method in making the credit decision.

Proposed comment 107(a)(17)–5 would explain that pursuant to proposed § 1002.107(c)(1) a financial institution shall maintain reasonable procedures to collect information provided by the applicant, which includes the time in business of the applicant, but if the financial institution is unable to collect or determine the time in business of the applicant, the financial institution reports that the time in business is ''not provided by applicant and otherwise undetermined.'' The Bureau believes that permitting use of this response would facilitate compliance, particularly in situations in which the application is denied or withdrawn early in the application process.

The Bureau seeks comment on its proposed approach to this data point. The Bureau also seeks comment on whether time-in-business information may be less relevant or collectable for certain products or situations (such as retailer-branded credit cards acquired at point of sale) and whether reporting ''not applicable'' should be allowed in those instances. In addition, the Bureau seeks comment on whether there should be an upper limit on time in business—for example, to allow reporting of ''over 20 years'' for any applicant of that duration, rather than requiring reporting of a specific number of years.

107(a)(18) Minority-Owned Business Status

Background

ECOA section 704B(b) requires financial institutions to inquire whether applicants for credit are minority-owned businesses and to maintain a record of the responses to that inquiry separate from the applications and accompanying information. Section 704B(c) provides that applicants for credit may refuse to provide information requested pursuant to 704B(b). The Bureau is proposing § 1002.107(a)(18) to address how a financial institution would collect and report an applicant's minority-owned business status.

SBREFA Proposal Under Consideration and Feedback

In the SBREFA Outline, the Bureau stated that it was considering proposing that financial institutions be permitted to collect and report minority-owned business status solely based on applicant self-reporting and that the Bureau was not considering requiring reporting based on visual observation and/or surname.[643] The Bureau also stated that it was considering proposing that the right to refuse under ECOA section 704B(c) apply to the financial institution's specific inquiries regarding minority-owned business status as well as women-owned status and the principal owners' race, sex, and ethnicity

Several SERs supported this approach and urged the Bureau to require collection and reporting of minority-owned business status based only on the information the applicant provides (*i.e.,* self-reporting).[644] SERs also expressed concerns about the difficulties and costs that may be associated with collecting minority-owned business status on some basis other than applicant self-reporting. For example, although many SERs indicated that they review some ownership information about applicants in order to obtain guarantees or for other reasons, most of those SERs said that they do not review the accrual of net profits and losses and some said that they do not review information related to who controls an applicant. One SER said that determining ownership is relatively straightforward, but the issue of control can be subjective. One SER said that it would not be able to determine who controlled an applicant and that an applicant would need to self-report that information. Another SER noted that some small business applicants do not have simple ownership structures. A different SER stated that some financial institutions do not meet in person with all of the owners of small business applicants.

Other industry stakeholders providing feedback on the SBREFA Outline also supported collection and reporting of minority-owned business status based only on applicant self-reporting and noted several challenges with reporting this data point based on visual observation and/or surname. Some industry commenters stated that it would not be possible to report minority-owned business status based on visual observation and/or surname in at least some circumstances. Others expressed concerns about the cost and time required to do so. One industry commenter noted that the tracking of ownership and other information needed to report based on visual observation and/or surname would be laborious. Another commenter noted that some financial institutions do not obtain the information necessary to make the determinations that would underlie a visual observation requirement (*i.e.,* information about ownership, control, etc.). One commenter specifically noted that the statute only requires financial institutions to ''inquire'' about minority-owned business status. Conversely, a community group opposed reporting based only on applicant self-reporting.

Some commenters stated that financial institutions should not be required to collect or report this information at all, or that they should not be required to collect or report it in certain situations, such as when a trust or other entity owns or controls an applicant.

Some SERs and a few other commenters said that the Bureau should create a tool or otherwise arrange for applicants to self-report, at least, demographic information (namely, minority-owned business status and women-owned business status as well as the ethnicity, race, and sex of principal owners) directly to the Bureau or to a third-party that maintains a database of such information.

Some SERs were concerned that, if notified of their right to refuse, applicants may not provide protected demographic information, thus limiting the usefulness of 1071 data. One SER and several other commenters similarly agreed with the Bureau's proposal under consideration to limit the right to refuse to applicants' protected demographic information only. However, three commenters opined that the Bureau's approach was too limited and that the right to refuse should apply to small business status as well as other data

[643] SBREFA Outline at 25–26.

[644] SBREFA Panel Report at 26.

points. Several SERs requested that the Bureau provide sample language for use in any disclosure and collection forms in which an applicant's right to refuse is stated, so that applicants understand why lenders are requesting protected demographic information and how the information will be used. Two SERs asked that the Bureau provide sample language in English as well as in other languages, such as Spanish.

The SBREFA Panel recommended that the Bureau consider creating sample data collection forms that, to the extent possible, simply and clearly explain the information being requested for purposes of this data point. The SBREFA Panel recommended that the Bureau consider developing sample disclosure language that financial institutions may use to provide some context as to why applicants are being asked to provide protected demographic information, in order to encourage applicants to respond. It also said that the Bureau should additionally consider providing these sample data collection forms in other languages, such as Spanish.[645]

Proposed Rule

Consistent with its approach during the SBREFA process, proposed § 1002.107(a)(18) would require financial institutions to collect and report whether an applicant is a minority-owned business. Proposed § 1002.107(a)(18) would also require financial institutions to collect and report whether minority-owned business status is being reported based on previously collected data pursuant to proposed § 1002.107(c)(2). It would also require that when the financial institution requests minority-owned business status from an applicant, the financial institution inform the applicant that the financial institution cannot discriminate on the basis of the applicant's minority-owned business status, or on whether the applicant provides this information. Finally, proposed § 1002.107(a)(18) would refer to proposed appendix F for additional details regarding how financial institutions are required to collect and report minority-owned business status. Proposed appendix F would include a requirement that a financial institution inform an applicant that the applicant is not required to respond to the financial institution's questions regarding the applicant's minority-owned business status and women-owned business status, and a prohibition on financial institutions requiring applicants to provide this information.[646] Consistent with the SBREFA Panel's recommendation, proposed appendix E, which is a sample data collection form, would include a question about minority-owned business status and related information to assist applicants with responding to the question.[647]

Proposed comment 107(a)(18)–1 would clarify that a financial institution would be required to ask an applicant if it is a minority-owned business for each covered application unless the financial institution is permitted to report minority-owned business status based on previously collected data. Additionally, the financial institution would be required to permit an applicant to refuse to answer the financial institution's inquiry and to inform the applicant that it is not required to provide the information. The financial institution would report the applicant's response, its refusal to answer the inquiry (such as when the applicant indicates that it does not wish to provide the requested information), or its failure to respond (such as when the applicant fails to submit a data collection form) to the inquiry. See proposed appendix F for additional instructions on how the Bureau proposes that financial institutions collect and report minority-owned business status.

Proposed comment 107(a)(18)–2 would explain that a financial institution must inform the applicant that the financial institution cannot discriminate on the basis of an applicant's minority-owned business status or on whether the applicant provides the information. It would also clarify that a financial institution may combine this non-discrimination notice regarding minority-owned business status with the similar non-discrimination notices that a financial institution is required to provide when requesting women-owned business status and a principal owner's ethnicity, race, and sex if a financial institution requests minority-owned business status, women-owned business status, and/or a principal owner's ethnicity, race, and sex in the same data collection form or at the same time.

Proposed comment 107(a)(18)–3 would explain how, pursuant to proposed § 1002.111(b), financial institutions must record an applicant's response regarding minority-owned business status pursuant to proposed § 1002.107(a)(18) separate from the application and accompanying information. This proposed comment would also provide examples of how responses could be recorded separately from the application and accompanying information.

Proposed comment 107(a)(18)–4 would state that pursuant to proposed § 1002.107(c)(1), a financial institution shall maintain procedures reasonably designed to collect applicant-provided information, which includes the applicant's minority-owned business status. However, if a financial institution does not receive a response to its inquiry, the financial institution would report that the applicant's minority-owned business status is ''not provided by applicant.''

Proposed comment 107(a)(18)–5 would state that notwithstanding proposed § 1002.107(b) (regarding verification of applicant-provided information), a financial institution would report the applicant's response, its refusal to answer the inquiry, or its failure to respond to the inquiry pursuant to proposed § 1002.107(a)(18), even if the financial institution verifies or otherwise obtains an applicant's minority-owned business status for other purposes. Moreover, as proposed in the instructions in appendix F, a financial institution would not be required or permitted to verify the applicant's response to the financial institution's inquiry pursuant to proposed § 1002.107(a)(18) regarding minority-owned business status.

Proposed comment 107(a)(18)–6 would clarify that a financial institution does not report minority-owned business status based on visual observation, surname, or any basis other than the applicant's response to the inquiry that the financial institution makes to satisfy § 1002.107(a)(18) or, if the financial institution is permitted to report based on previously collected data, on the basis of the applicant's response to the inquiry that the financial institution previously made to satisfy § 1002.107(a)(18).

Proposed comment 107(a)(18)–7 would clarify that a financial institution may report minority-owned business status based on previously collected data if the financial institution is permitted to do so pursuant to proposed § 1002.107(c)(2) and its commentary.

Consistent with its approach during the SBREFA process, the Bureau is not proposing that financial institutions collect or report minority-owned

[645] *Id.* at 45.

[646] Proposed appendix G would include a similar requirement to notify applicants that they are not required to provide information regarding principal owners' ethnicity, race, and sex and a similar prohibition on financial institutions requiring that applicants provide such information.

[647] The Bureau seeks additional comment regarding foreign language forms and notices in the section-by-section analysis of proposed appendix E below.

business status based on visual observation, surname, or any method other than an applicant-provided response to a specific inquiry asked for purposes of proposed § 1002.107(a)(18). Similarly, the Bureau is not proposing that financial institutions be permitted or required to verify an applicant's response. Although the Bureau is proposing that financial institutions collect and report a principal owner's ethnicity and race based on visual observation and/or surname in certain circumstances, the Bureau believes that there would be additional complexities and difficulties with attempting to collect and report minority-owned business status based on visual observation and/or surname. Some of these additional difficulties arise because the financial institution may need to determine who controls the applicant as well as who owns the applicant and who realizes the net profits and losses. Other difficulties arise from the fact that the financial institution would need to know how each natural person it meets with in person fits into the ownership structure of the applicant as well as its control and profit structures. For example, it would not be sufficient to know whether a natural person is an owner. The financial institution also would need to know what percentage of the ownership interest and control the natural person held and, if that ownership was not more than 50 percent, the institution would need to know who owned and controlled the remainder of the applicant. An additional complication, specific to this data point, arises when the financial institution is not able to visually observe absent owners. In these cases, the financial institution may not be able to determine if the business is a minority-owned business. Thus, even if a financial institution has an in-person meeting with one or more natural persons associated with an applicant, it may be difficult or impossible for the financial institution to determine if an applicant is a minority-owned business.

The Bureau seeks comment on its proposed approach to this data point, including the proposed methods of collecting and reporting the data. The Bureau also requests comment on whether additional clarification regarding any aspect of this data point is needed. In particular, the Bureau seeks comment on whether applicants are likely to have difficulty understanding and determining the information they are being asked to provide and, if so, how the Bureau may mitigate such difficulties.

107(a)(19) Women-Owned Business Status

Background

ECOA section 704B(b) requires financial institutions to inquire whether applicants for credit are women-owned businesses and to maintain a record of the responses to that inquiry separate from the applications and accompanying information. Section 704B(c) provides that applicants for credit may refuse to provide information requested pursuant to 704B(b). The Bureau is proposing § 1002.107(a)(19) to address how a financial institution would collect and report an applicant's women-owned business status.

SBREFA Proposal Under Consideration and Feedback Received

In the SBREFA Outline, the Bureau stated that it was considering proposing that financial institutions be permitted to collect and report women-owned business status solely based on applicant self-reporting and that the Bureau was not considering requiring reporting based on visual observation and/or surname.[648] The Bureau also stated that it was considering proposing that the right to refuse under ECOA section 704B(c) apply to the financial institution's specific inquiries regarding minority-owned business status as well as women-owned status and the principal owners' race, sex, and ethnicity.

As with collecting and reporting minority-owned business status, several SERs supported this approach and urged the Bureau to require collection and reporting of women-owned business status based only on the information the applicant provides (*i.e.,* self-reporting).[649] SERs also expressed concerns about the difficulties and costs that may be associated with collecting women-owned business status on some basis other than applicant self-reporting. For example, although many SERs indicated that they review some ownership information about applicants in order to obtain guarantees or for other reasons, most of those SERs said that they do not review the accrual of net profits and losses and some said that they do not review information related to who controls an applicant. One SER said that determining ownership is relatively straightforward, but the issue of control can be subjective. One SER said that it would not be able to determine who controlled an applicant and that an applicant would need to self-report that information. Another SER noted that some small business applicants do not have simple ownership structures. A different SER stated that some financial institutions do not meet in person with all of the owners of small business applicants.

As with collecting and reporting minority-owned business status, other industry stakeholders providing feedback on the SBREFA Outline also supported collection and reporting of women-owned business status based only on applicant self-reporting and noted several challenges with reporting this data point based on visual observation and/or surname. Some industry commenters stated that it would not be possible to report women-owned business status based on visual observation and/or surname in, at least, some circumstances. Others expressed concerns about the cost and time required to do so. One industry commenter noted that the tracking of ownership and other information needed to report based on visual observation and/or surname would be laborious. Another commenter noted that some financial institutions do not obtain the information necessary to make the determinations that would underlie a visual observation requirement (*i.e.,* information about ownership, control, etc.). One commenter specifically noted that the statute only requires financial institutions to ''inquire'' about women-owned business status. Conversely, a community group opposed reporting based only on applicant self-reporting.

Some commenters stated that financial institutions should not be required to collect or report this information at all, or that they should not be required to collect or report it in certain situations, such as when a trust or other entity owns or controls an applicant.

Some SERs and a few other commenters said that the Bureau should create a tool or otherwise arrange for applicants to self-report, at least, demographic information (namely women-owned business status and minority-owned business status as well as the ethnicity, race, and sex of principal owners) directly to the Bureau or to a third-party that maintains a database of such information.

Some SERs were concerned that, if notified of their right to refuse, applicants may not provide protected demographic information, thus limiting the usefulness of 1071 data. One SER and several other commenters similarly agreed with the Bureau's proposal under consideration to limit the right to refuse to applicants' protected demographic information only. However, three

[648] SBREFA Outline at 25–26.

[649] SBREFA Panel Report at 26.

commenters opined that the Bureau's approach was too limited and that the right to refuse should apply to small business status as well as other data points. Several SERs requested that the Bureau provide sample language for use in any disclosure and collection forms in which an applicant's right to refuse is stated, so that applicants understand why lenders are requesting protected demographic information and how the information will be used. Two SERs asked that the Bureau provide sample language in English as well as in other languages, such as Spanish.

The SBREFA Panel recommended that the Bureau consider creating sample data collection forms that, to the extent possible, simply and clearly explain the information being requested for purposes of this data point.[650] The SBREFA Panel recommended that the Bureau consider developing sample disclosure language that financial institutions may use to provide some context as to why applicants are being asked to provide protected demographic information, in order to encourage applicants to respond.[651] It also recommended that the Bureau should consider providing these sample data collection forms in other languages, such as Spanish.[652]

Proposed Rule

Consistent with its approach during the SBREFA process, proposed § 1002.107(a)(19) would require financial institutions to collect and report whether an applicant is a women-owned business. Proposed § 1002.107(a)(19) would also require financial institutions to collect and report whether women-owned business status is being reported based on previously collected data pursuant to proposed § 1002.107(c)(2). It would also require that when the financial institution requests women-owned business status from an applicant, the financial institution inform the applicant that the financial institution cannot discriminate on the basis of the applicant's women-owned business status, or on whether the applicant provides this information. Finally, proposed § 1002.107(a)(19) would refer to proposed appendix F for additional details regarding how financial institutions are required to collect and report women-owned business status. Proposed appendix F would include a requirement that a financial institution inform an applicant that the applicant is not required to respond to the financial institution's questions regarding the applicant's women-owned business status and minority-owned business status, and a prohibition on financial institutions requiring applicants to provide this information. Consistent with the SBREFA Panel's recommendation, proposed appendix E, which is a sample data collection form, would include a question about women-owned business status and related information to assist applicants with responding to the question.

Proposed comment 107(a)(19)–1 would clarify that a financial institution would be required to ask an applicant if it is a women-owned business for each covered application unless the financial institution is permitted to report women-owned business status based on previously collected data. Additionally, the financial institution would be required to permit an applicant to refuse to answer the financial institution's inquiry and to inform the applicant that it is not required to provide the information. The financial institution would report the applicant's response, its refusal to answer the inquiry (such as when the applicant indicates that it does not wish to provide the requested information), or its failure to respond (such as when the applicant fails to submit a data collection form) to the inquiry. See proposed appendix F for additional instructions on how the Bureau proposes that financial institutions collect and report women-owned business status.

Proposed comment 107(a)(19)–2 would explain that a financial institution must inform the applicant that the financial institution cannot discriminate on the basis of an applicant's women-owned business status or on whether the applicant provides the information. It would also clarify that a financial institution may combine this non-discrimination notice regarding women-owned business status with the similar non-discrimination notices that a financial institution is required to provide when requesting minority-owned business status and a principal owner's ethnicity, race, and sex if a financial institution requests minority-owned business status, women-owned business status, and/or a principal owner's ethnicity, race, and sex in the same data collection form or at the same time.

Proposed comment 107(a)(19)–3 would explain how, pursuant to proposed § 1002.111(b), financial institutions must record an applicant's response regarding women-owned business status pursuant to proposed § 1002.107(a)(19) separate from the application and accompanying information. This proposed comment would also provide examples of how responses could be recorded separately from the application and accompanying information.

Proposed comment 107(a)(19)–4 would state that pursuant to proposed § 1002.107(c)(1), a financial institution shall maintain procedures reasonably designed to collect applicant-provided information, which includes the applicant's women-owned business status. However, if a financial institution does not receive a response, the financial institution would report that the applicant's women-owned business status is ''not provided by applicant.''

Proposed comment 107(a)(19)–5 would state that notwithstanding proposed § 1002.107(b) (regarding verification of applicant-provided information), a financial institution would report the applicant's response, its refusal to answer the inquiry, or its failure to respond to the inquiry pursuant to proposed § 1002.107(a)(19), even if the financial institution verifies or otherwise obtains an applicant's women-owned business status for other purposes. Moreover, as proposed in the instructions in appendix F, a financial institution would not be required or permitted to verify the applicant's response to the financial institution's inquiry pursuant to proposed § 1002.107(a)(19) regarding women-owned business status. Thus, for example, under the principle articulated in proposed comment 107(a)(19)–5, a financial institution could not second guess an applicant's decision to determine whether it is a women-owned business for purposes of proposed § 1002.107(a)(19) based on the gender identity of the principal owners. The Bureau seeks comment on whether it would be useful to expressly codify this application of the principle in the commentary.

Proposed comment 107(a)(19)–6 would clarify that a financial institution does not report women-owned business status based on visual observation, surname, or any basis other than the applicant's response to the inquiry that the financial institution makes to satisfy proposed § 1002.107(a)(19) or, if the financial institution is permitted to report based on previously collected data, on the basis of the applicant's response to the inquiry that the financial institution previously made to satisfy proposed § 1002.107(a)(19).

Proposed comment 107(a)(19)–7 would clarify that a financial institution may report women-owned business status based on previously collected

[650] *Id.* at 45.

[651] *Id.*

[652] *Id.*

data if the financial institution is permitted to do so pursuant to proposed § 1002.107(c)(2) and its commentary.

Consistent with its approach during the SBREFA process, the Bureau is not proposing that financial institutions collect or report women-owned business status based on visual observation, surname, or any method other than an applicant-provided response to a specific inquiry asked for purposes of proposed § 1002.107(a)(19). Similarly, the Bureau is not proposing that financial institutions be permitted or required to verify an applicant's response. Although the Bureau is proposing that financial institutions collect and report a principal owner's ethnicity and race based on visual observation and/or surname in certain circumstances, the Bureau believes that there would be additional complexities and difficulties with attempting to collect and report women-owned business status based on visual observation and/or surname. Some of these additional difficulties arise because the financial institution may need to determine who controls the applicant as well as who owns the applicant and who realizes the net profits and losses. Other difficulties arise from the fact that the financial institution would need to know how each natural person it meets with in person fits into the ownership structure of the applicant as well as its control and profit structures. For example, it would not be sufficient to know whether a natural person is an owner. The financial institution also would need to know what percentage of the ownership interest and control the natural person held and, if that ownership was not more than 50 percent, the institution would need to know who owned and controlled the remainder of the applicant. An additional complication, specific to this data point, arises when the financial institution is not able to visually observe absent owners. In these cases, the financial institution may not be able to determine if the business is a women-owned business. Thus, even if a financial institution has an in-person meeting with one or more natural persons associated with an applicant, it may be difficult or impossible for the financial institution to determine if an applicant is a women-owned business.

The Bureau seeks comment on its proposed approach to this data point, including the proposed methods of collecting and reporting the data. The Bureau also requests comment on whether additional clarification regarding any aspect of this data point is needed. In particular, the Bureau seeks comment on whether applicants are likely to have difficulty understanding and determining the information they are being asked to provide and, if so, how the Bureau may mitigate such difficulties.

107(a)(20) Ethnicity, Race, and Sex of Principal Owners

Background

ECOA section 704B(e)(2)(G) requires financial institutions to compile and maintain certain information, including the race, sex, and ethnicity of an applicant's principal owners. However, section 1071 does not set out what categories should be used when collecting and reporting this information. The Bureau is proposing § 1002.107(a)(20) to address how a financial institution would collect and report the ethnicity, race, and sex of an applicant's principal owners. See the section-by-section analysis of proposed § 1002.102(o) above for a discussion of the definition of a principal owner.

SBREFA Proposal Under Consideration and Feedback

In the SBREFA Outline, the Bureau stated that it was considering proposing that financial institutions use the aggregate race, sex, and ethnicity categories from Regulation C when requesting that applicants provide race, sex, and ethnicity information of principal owners.[653]

SERs were generally supportive of aligning the race, sex, and ethnicity categories used for reporting demographic information about principal owners in 1071 with the aggregate categories used in Regulation C for HMDA.[654] However, one SER stated that the Bureau should consider revisiting the use of male and female as categories for sex because gender is not binary. Additionally, some other stakeholders, including community groups and a trade association, were opposed to using the HMDA aggregate categories for reporting race and ethnicity. Generally, these commenters opposed the use of the aggregate categories because, they said, those categories could mask discrimination and do not provide sufficient detail or context. These commenters generally supported use of the HMDA disaggregated subcategories for reporting a principal owner's race and ethnicity.

Additionally, in the SBREFA Outline, the Bureau stated that it was considering proposing that the collection and reporting of a principal owner's race, sex, and ethnicity be based solely on applicant self-reporting. The Bureau stated in the SBREFA Outline that it anticipated that requiring reporting based on visual observation and/or surname could create unwarranted compliance burdens in the context of small business lending, although the Bureau sought feedback on the potential challenges, costs, and benefits of implementing such a requirement. The Bureau also stated in the SBREFA Outline that it was considering developing a sample data collection form to assist industry in collecting this information and to communicate an applicant's right to refuse to provide such information.[655]

SERs generally supported applicants' self-reporting of principal owners' race, sex, and ethnicity and strongly preferred that financial institutions not be required to report based on visual observation and/or surname. Some SERs said financial institutions should not be required to ''guess'' the race, sex, and ethnicity of principal owners, remarking, among other things, that doing so is both extremely difficult and ineffective, and that collecting demographic information based on visual observation makes staff uncomfortable. Another SER said that reporting demographic information based on visual observation and/or surname is likely to introduce both error and bias to the process. One SER stated that financial institutions do not always meet with all principal owners of a business in person and that financial institutions occasionally meet with a manager or officer who might not be a principal owner. Conversely, another SER stated that when relying on applicants to self-report demographic information, there are higher rates of non-FEFF responses in the business lending context compared to consumer residential lending. This SER suggested that the Bureau will need to account for this disparity.

Other industry and trade association stakeholders that commented on the SBREFA Outline also generally supported applicants' self-reporting of principal owners' race, sex, and ethnicity and strongly preferred that financial institutions not be required to report this information based on visual observation and/or surname. Some of these commenters noted that some financial institutions might not know who a business's principal owners are, might not collect the information necessary to determine who they are, or might not meet in person with principal owners. Others asserted that reporting

[653] SBREFA Outline at 32.

[654] SBREFA Panel Report at 29–30.

[655] SBREFA Outline at 32.

based on visual observation and/or surname increases the cost and time to process a small business loan, may result in inaccurate data, and may create awkward situations or customer disputes. One trade association argued that the statute only requires financial institutions to ''inquire'' about a principal owner's race, sex, and ethnicity. However, two community groups stated that financial institutions should be permitted or required to report based on visual observation and/or surname when an applicant does not provide the information, and a CDFI stated that financial institutions should be required to report race, sex, and ethnicity based on visual observation and/or surname only when an applicant does not provide the information and does not refuse to provide the information.

Two industry commenters suggested that the Bureau create a tool or otherwise arrange for applicants to self-report, at least, demographic information (namely minority-owned business status and women-owned business status as well as the race, sex, and ethnicity of principal owners) directly to the Bureau or to a third-party that maintains a database of such information.

Some SERs were concerned that, if notified of their right to refuse, applicants may not provide protected demographic information, thus limiting the usefulness of 1071 data. One SER and several other commenters similarly agreed with the Bureau's proposal under consideration to limit the right to refuse to applicants' protected demographic information only. However, three commenters opined that the Bureau's approach was too limited and that the right to refuse should apply to small business status as well as other data points. Several SERs requested that the Bureau provide sample language for use in any disclosure and collection forms in which an applicant's right to refuse is stated, so that applicants understand why lenders are requesting protected demographic information and how the information will be used. Two SERs asked that the Bureau provide sample language in English as well as in other languages, such as Spanish.

One trade association requested that reporting of a principal owner's race, sex, and ethnicity not be required in certain situations, such as when a principal owner is a trust or another entity.

Some SERs and other commenters requested that the Bureau develop a form to assist financial institutions with collecting the race, sex, and ethnicity of principal owners. One SER suggested developing a sample data collection form similar to the one used for HMDA data collection and including the same disclosures. One commenter noted that the use of a model form may increase the uniformity and consistency of reporting such demographic information. Another commenter suggested that any model form should include an explanation of why the financial institution is requesting the information and a statement of the applicant's right to refuse to provide the information.[656]

The SBREFA Panel recommended that, in order to assist both small financial institutions and small business applicants, the Bureau consider creating sample data collection forms that, to the extent possible, simply and clearly explain the information being requested for purposes of this data point. The Panel also recommended that the Bureau additionally consider providing such sample data collection forms in other languages, such as Spanish.[657]

Proposed Rule

Proposed § 1002.107(a)(20) would require financial institutions to collect and report the ethnicity, race, and sex [658] of the applicant's principal owners as well as whether this information is being reported based on previously collected data pursuant to proposed § 1002.107(c)(2). It would also require financial institutions to report whether the ethnicity and race are being reported by the financial institution on the basis of visual observation or surname. Proposed § 1002.107(a)(20) would require financial institutions to collect and report ethnicity, race, and sex data as prescribed in proposed appendix G. Proposed appendix G would include a requirement that a financial institution inform an applicant that the applicant is not required to respond to the financial institution's questions regarding its principal owners' ethnicity, race or sex and would also include a prohibition on financial institutions requiring applicants to provide this information. Proposed § 1002.107(a)(20) would also require that when the financial institution requests ethnicity, race, and sex information from an applicant, the financial institution inform the applicant that the financial institution cannot discriminate on the basis of a principal owner's ethnicity, race, or sex, or on whether the applicant provides this information. Consistent with the SBREFA Panel's recommendation, the Bureau is proposing a sample data collection form that financial institutions could use to collect ethnicity, race, and sex information. See proposed appendix E.

Proposed Rule—Collecting Ethnicity, Race, and Sex, In General

Proposed comment 107(a)(20)–1 would clarify how a financial institution collects ethnicity, race, and sex information. It would state that unless a financial institution is permitted to report ethnicity, race, and sex information based on previously collected data pursuant to proposed § 1002.107(c)(2), a financial institution must ask an applicant to report its principal owners' ethnicity, race, and sex for each covered application and that the financial institution must permit an applicant to refuse to answer the financial institution's inquiry. It would require financial institutions to inform the applicant that it is not required to provide the information. Proposed comment 107(a)(20)–1 would further clarify that the financial institution must report the applicant's responses, its refusal to answer the inquiries, or its failure to respond to the inquiries, and explain that in certain situations, discussed in proposed comments 107(a)(20)–7 and –8 and in appendix G, a financial institution may also be required to report one or more principal owners' ethnicity and race (but not sex) based on visual observation and/or surname. Proposed comment 107(a)(20)–1 would cross-reference proposed appendix G for additional instructions.

Proposed comment 107(a)(20)–2 would explain that a financial institution must inform the applicant that the financial institution shall not discriminate on the basis of a principal owner's ethnicity, race, or sex or on whether the applicant provides that information. It would also clarify that a financial institution may combine this non-discrimination notice with the similar non-discrimination notices that a financial institution would be required to provide when requesting minority-owned business status and women-owned business status if a financial institution requests minority-owned business status, women-owned business status, and/or a principal owner's ethnicity, race, and sex in the same data collection form or at the same time.

[656] For additional information related to SBREFA feedback on the right to refuse, see the section-by-section analyses of proposed § 1002.107(a)(18) and (19) above.

[657] SBREFA Panel Report at 46.

[658] While ECOA section 704B(e)(2)(G) uses ''race, sex, and ethnicity,'' the Bureau has reordered them to ''ethnicity, race, and sex'' for purposes of this proposal, so that they appear alphabetically and for consistency with how they appear in Regulation C.

Proposed comment 107(a)(20)–3 would explain how, pursuant to proposed § 1002.111(b), financial institutions must record applicants' responses regarding a principal owner's ethnicity, race, and sex pursuant to § 1002.107(a)(20) separate from the application and accompanying information. This proposed comment would also provide examples of how responses could be recorded separately from the application and accompanying information.

Proposed comment 107(a)(20)–4 would clarify that a financial institution would be required to maintain procedures reasonably designed to collect applicant-provided information, including the ethnicity, race, and sex of an applicant's principal owners pursuant to proposed § 1002.107(c)(1). However, if a financial institution is nonetheless unable to collect the principal owners' ethnicity, race, or sex from the applicant and if the financial institution is not required to report the principal owners' ethnicity and race based on visual observation and/or surname, the financial institution would report that the principal owner's ethnicity, race, or sex (as applicable) is ''not provided by applicant.''

Proposed comment 107(a)(20)–12 would clarify that a financial institution would neither be required nor permitted to verify the ethnicity, race, or sex information that the applicant provides for purposes of proposed § 1002.107(a)(20), even if the financial institution verifies or otherwise obtains the ethnicity, race, or sex of the applicant's principal owners for other purposes. Thus, for example, under the principle articulated in proposed comment 107(a)(20)–12, a financial institution could not second guess an applicant's decision to provide sex information for the applicant's principal owners for purposes of § 1002.107(a)(20) based on the gender identity of the principal owners. The Bureau solicits comment on whether it would be useful to expressly codify this application of the principle in the commentary.

Additionally, the proposed comment would explain that, if an applicant refuses to respond to the inquiry pursuant to proposed § 1002.107(a)(20) or fails to respond to this inquiry, the financial institution would report that the applicant declined to provide the information or did not respond to the inquiry (as applicable), unless the financial institution is required to report ethnicity and race based on visual observation and/or surname. Finally, the proposed comment would explain that the financial institution does not report ethnicity, race, or sex pursuant to proposed § 1002.107(a)(20) based on information that the financial institution collects for other purposes.

Proposed comment 107(a)(20)–5 would explain that generally an applicant determines its principal owners and decides whether to provide information about principal owners. It would further state that, nonetheless, a financial institution may be required to report ethnicity and race information based on visual observation and/or surname and may need to determine if a natural person with whom the financial institution meets in person is a principal owner. It would explain how a financial institution determines who is a principal owner in the event that the financial institution may be required to report ethnicity and race information based on visual observation and/or surname. It would also provide examples of how the financial institution can make that determination and note that the financial institution is not required to verify any responses regarding whether a natural person is a principal owner.

The Bureau seeks comment on these general aspects of collecting and reporting principal owners' ethnicity, race, and sex, including comments on the challenges that financial institutions may have implementing them.

Proposed Rule—Collecting Ethnicity and Race Using Aggregate Categories and Disaggregated Subcategories

The Bureau is proposing that financial institutions request principal owners' ethnicity and race using both aggregate categories as well as disaggregated subcategories.

With respect to ethnicity data collection, the Bureau is proposing to use the same aggregate categories (*i.e.,* Hispanic or Latino and Not Hispanic or Latino) and disaggregated subcategories as are used in Regulation C. With respect to race data collection, the Bureau is proposing to use the same aggregate categories as are used in Regulation C: American Indian or Alaska Native; Asian; Black or African American; Native Hawaiian or Other Pacific Islander; and White. Regulation C also has disaggregated subcategories for the Asian race category and the Native Hawaiian or Other Pacific Islander race category. In addition, with respect to the American Indian or Alaska Native race category, Regulation C invites an applicant to provide the name of a principal or enrolled tribe. Similar to HMDA, the Bureau is proposing to invite an applicant to provide the name of a principal or enrolled tribe for each principal owner with respect to the Indian or Alaska Native race category and to adopt the disaggregated subcategories used in HMDA for the Asian race category and the Native Hawaiian and Other Pacific Islander race category. In addition, the Bureau is proposing to add disaggregated subcategories for the Black or African American race category, which are not used when collecting data pursuant to Regulation C.

OMB has issued standards for the classification of Federal data on ethnicity and race.[659] OMB's government-wide standards provide a minimum standard for maintaining, collecting, and presenting data on race and ethnicity for all Federal reporting purposes. These standards have been developed to provide ''a common language for uniformity and comparability in the collection and use of data on race and ethnicity by Federal agencies.'' [660] The OMB standards provide the following minimum categories for data on ethnicity and race: Two minimum ethnicity categories (Hispanic or Latino; Not Hispanic or Latino) and five minimum race categories (American Indian or Alaska Native; Asian; Black or African American; Native Hawaiian or Other Pacific Islander; and White). The aggregate categories for ethnicity and race in Regulation C, which the Bureau is proposing to use in subpart B, conform to the OMB standards.

In addition to the minimum data categories for ethnicity and race, the OMB Federal Data Standards on Race and Ethnicity provide additional key principles. First, self-identification is the preferred means of obtaining information about an individual's ethnicity and race, except in instances where observer identification is more practical.[661] Second, the collection of greater detail is encouraged as long as any collection that uses more detail is organized in such a way that the additional detail can be aggregated into the minimum aggregate categories for data on ethnicity and race. More detailed reporting, which can be aggregated to the minimum categories, may be used at the agencies' discretion. Lastly, Federal agencies must produce as much detailed information on ethnicity and race as possible; however, Federal agencies shall not present data on detailed categories if doing so would

[659] Off. of Mgmt. & Budget, *Revisions to the Standards for the Classification of Federal Data on Race and Ethnicity,* 62 FR 58782, 58782–90 (Oct. 30, 1997) (OMB Federal Data Standards on Race and Ethnicity).

[660] *See id.*

[661] *See id.*

compromise data quality or confidentiality standards.[662]

Although OMB received comments requesting the creation of a separate Arab or Middle Eastern ethnicity category prior to the adoption of the OMB Federal Data Standards on Race and Ethnicity in 1997, OMB accepted the Interagency Committee's recommendation not to include one in the 1997 minimum standards for reporting of Federal data on race and ethnicity. OMB noted that while it was adopting the Interagency Committee's recommendation, it believed additional research was needed to determine the best way to improve data on this population group.[663]

In 2017, OMB requested comment on the Federal Interagency Working Group for Research on Race and Ethnicity's (Working Group's) proposals to update the OMB Federal Data Standards on Race and Ethnicity.[664] The Working Group proposed adding a Middle Eastern or North African classification to the Federal Data Standards on Race and Ethnicity and to issue specific guidelines for the collection of detailed data for American Indian or Alaska Native, Asian, Black or African American, Hispanic or Latino, Native Hawaiian or Other Pacific Islander, and White groups.[665] The Working Group also considered whether race and ethnicity should be collected using separate questions versus a combined question.

In considering what to propose that financial institutions collect and report with respect to the ethnicity and race of the applicant's principal owners, the Bureau believes it is also important to consider the data standards that the U.S. Census Bureau (Census Bureau) uses in the Decennial Census. The definition of Hispanic or Latino origin used in the 2010 and 2020 Census questionnaire refers to a person of Cuban, Mexican, Puerto Rican, South or Central American, or other Spanish culture or origin regardless of race.[666] The 2010 and 2020 Census disaggregated the Hispanic or Latino ethnicity into four categories (Mexican, Mexican American, or Chicano; Puerto Rican; Cuban; and Another Hispanic, Latino or Spanish origin) and included an area where respondents could provide (*i.e.,* write in) a specific Hispanic, Latino, or Spanish origin group as additional information.[667]

The 2010 and 2020 Census questionnaires listed three of OMB's five aggregate race categories (American Indian or Alaska Native; Black or African American; and White). Although the questionnaires do not list the aggregate race categories for Asian or for Native Hawaiian or Other Pacific Islander, they do list the related disaggregated subcategories for the Asian race category (*i.e.,* Asian Indian, Chinese, Filipino, Japanese, Korean, Vietnamese, Other Asian), and for the Native Hawaiian and Other Pacific Islander race category (*i.e.,* Native Hawaiian, Chamorro,[668] Samoan, Other Pacific Islander). These questionnaires also included three areas where respondents could write in a specific race: A specific Other Asian race, a specific Other Pacific Islander race, or the name of an enrolled or principal tribe in the American Indian or Alaska Native category.[669] Additionally, the 2020 Census allowed respondents to write in a specific origin for the White category and for the Black or African American category. For respondents who did not identify with any of the five minimum OMB race categories, the Census Bureau included a sixth race category—Some Other Race—on the 2010 and 2020 Census questionnaires. Respondents could also select one or more race categories and write-in options.[670]

On February 28, 2017, the Census Bureau released its 2015 National Content Test: Race and Ethnicity Analysis Report. The National Content Test (NCT) provided the U.S. Census Bureau with empirical research to contribute to the planning for the content of the 2020 Census' race/ethnicity questions. The report presented findings to the Census Bureau Director and executive staff on research conducted to assess optimal design elements that could be used in question(s) on race and ethnicity. It noted that Americans view ''race'' and ''ethnicity'' differently than in decades past and that a growing number of people find the current race and ethnicity categories confusing, or they wish to see their own specific group reflected on the Census questionnaire. The NCT's research found that there have been a growing number of people who do not identify with any of the official OMB race categories, and that an increasing number of respondents have been racially classified as ''Some Other Race.'' This was primarily because of reporting by Hispanics who did not identify with any of the OMB race categories, but it also noted that segments of other populations, such as Afro-Caribbean and Middle Eastern or North African populations, did not identify with any of the OMB race categories.[671] The 2015 National Content Test: Race and Ethnicity Analysis Report concluded that optimal design elements that may increase reporting, decrease item non-response, and improve data accuracy and reliability include: (1) A combined race and ethnicity question with detailed checkbox options; (2) a separate ''Middle Eastern or North African'' response category; and (3) instructions to ''Mark all that apply'' or ''Select all that apply'' (instead of ''Mark [X] one or more boxes'').[672]

As discussed above, the Census Bureau did not ultimately incorporate these design elements into the questionnaire for the 2020 Decennial Census. Instead, the questionnaire continued to ask about ethnicity and race in two separate questions. While the questionnaire did not provide detailed check box options for the White race category or for the Black or African American race category, the questionnaire did add write-in options and noted examples. For White, it noted examples of German, Irish, English, Italian, Lebanese, and Egyptian. For Black or African American, it noted examples of African American, Jamaican, Haitian, Nigerian, Ethiopian, and Somali.[673] Nonetheless, as discussed below, the Bureau is requesting comment on whether the approach and design elements set forth in the 2015 National Content Test: Race and Ethnicity Report Analysis (whether in whole or in part) would improve data collection that otherwise furthers section 1071's purposes, improve self-identification of race and ethnicity by applicants and response rates, or impose

[662] *See id.*

[663] 62 FR 58782 (Oct. 30, 1997).

[664] 82 FR 12242 (Mar. 1, 2017).

[665] *See* OMB Federal Data Standards on Race and Ethnicity.

[666] *See* U.S. Census Bureau, *2010 Official Questionnaire, https://www.census.gov/history/pdf/2010questionnaire.pdf* (2010 Census Official Questionnaire), and U.S. Census Bureau, *2020 Official Questionnaire, https://www2.census.gov/programs-surveys/decennial/2020/technical-documentation/questionnaires-and-instructions/questionnaires/2020-informational-questionnaire.pdf* (2020 Census Official Questionnaire).

[667] *See* 2010 Census Official Questionnaire and 2020 Census Official Questionnaire.

[668] The questionnaire for the 2010 Census included ''Guamanian or Chamorro,'' but the questionnaire for the 2020 Census included only ''Chamorro.''

[669] *See* 2010 Census Official Questionnaire and 2020 Census Official Questionnaire.

[670] *See id.*

[671] U.S. Census Bureau, *2015 National Content Test: Race and Ethnicity Analysis Report, Executive Summary,* at ix (Feb. 28, 2017), *https://www2.census.gov/programs-surveys/decennial/2020/program-management/final-analysis-reports/2015nct-race-ethnicity-analysis.pdf.*

[672] *Id.* at 83–85.

[673] *See* 2020 Census Official Questionnaire.

burdens on financial institutions collecting and reporting this information.

Consistent with its approach during the SBREFA process, the Bureau is proposing that financial institutions must permit applicants to provide a principal owner's ethnicity and race using the aggregate categories used for HMDA data collection. The Bureau also believes that aligning the aggregate ethnicity and race categories for 1071 data collection with the HMDA data collection will promote consistency and may reduce potential confusion for applicants, financial institutions, and other users of the data. As noted above, the feedback received on the SBREFA Outline generally showed that SERs and commenters favored such consistency.

However, the Bureau is also proposing that applicants must be permitted to provide a principal owner's ethnicity and race using the disaggregated subcategories used in HMDA data collection. With respect to ethnicity data collection, the Bureau is proposing that applicants must be permitted to provide a principal owner's ethnicity using the disaggregated subcategories used in HMDA data collection. For race data collection, the Bureau is proposing that applicants must be permitted to provide a principal owner's race using the disaggregated subcategories for the Asian race category and the Native Hawaiian or Other Pacific Islander race category. Unlike HMDA, the Bureau is also proposing that applicants must be permitted to provide a principal owner's race using disaggregated subcategories for the Black or African American race category. Lastly, similar to HMDA, the Bureau is proposing to invite an applicant to provide the name of a principal or enrolled tribe for each principal owner with respect to the American Indian or Alaska Native race category.

This portion of proposed § 1002.107(a)(20) differs from the Bureau's SBREFA approach. The Bureau is proposing use of disaggregated subcategories for 1071 data collection, in part, for consistency with existing HMDA reporting requirements. Moreover, based on feedback received during the SBREFA process from SERs and other stakeholders, the Bureau believes that collection and reporting using disaggregated subcategories could be beneficial when attempting to identify potential discrimination or business and community development needs in particular communities. While the Bureau recognizes that disaggregated data may not be useful in analyzing potential discrimination where financial institutions do not have a sufficient number of applicants or borrowers within particular subgroups to permit reliable assessments of whether unlawful discrimination may have occurred, disaggregated data on ethnicity and race may help identify potentially discriminatory lending patterns in situations in which the numbers are sufficient to permit such fair lending assessments. Additionally, as suggested in the 2015 National Content Test: Race and Ethnicity Report Analysis, the use of disaggregated subcategories may increase response rates.

Nonetheless, the Bureau acknowledges the concerns that some SERs and other stakeholders raised regarding the collection and reporting of disaggregated data. In particular, the Bureau understands that including the disaggregated subcategories for four principal owners may make data collection more difficult in certain situations, such as for applications taken solely by telephone or for paper applications taken at retail locations. Given these concerns, the Bureau seeks comment on whether an accommodation should be made for certain application scenarios, for example by permitting financial institutions to collect ethnicity and race information using only the aggregate categories or to permit financial institutions to collect ethnicity, race, and sex information on only one principal owner in those scenarios. Additionally, the Bureau notes that FinCEN's CDD rule excludes from certain of its requirements point-of-sale transactions for the purchase of retail goods or services up to a limit of $50,000.[674] For the reasons discussed in more detail in the section-by-section analysis of proposed § 1002.107(c)(1) below, the Bureau is not proposing to take this approach for the 1071 rule given the different purposes and requirements of the CDD rule (as well as FinCEN's related customer identification program (CIP) rule)[675] and section 1071. Nonetheless, the Bureau seeks comment on whether covered applications taken at retail locations, such as credit cards and lines of credit with a credit limit under a specified amount (such as $50,000), should be excepted from some or all of the requirement to obtain principal owners' ethnicity, race, and sex information. For example, should financial institutions only be required to ask about principal owners' sex along with aggregate race and ethnicity categories (but not disaggregated subcategories), or to ask about only one principal owner's ethnicity, race, and sex for such applications?

The Bureau seeks comment on its proposed use of the HMDA aggregate categories, the HMDA disaggregated subcategories (including the ability to provide additional information if an applicant indicates that a principal owner is Other Hispanic or Latino, Other Asian, or Other Pacific Islander), and the addition of disaggregated subcategories for the Black or African American category. Additionally, the Bureau seeks comment regarding whether it would be helpful or appropriate to provide additional clarification or to pursue a different approach regarding the ability of a principal owner to identify as Other Hispanic or Latino, Other Asian, or Other Pacific Islander or to provide additional information if a principal owner is Other Hispanic or Latino, Other Asian, or Other Pacific Islander. The Bureau also seeks comment on whether any additional or different categories or subcategories should be used for 1071 data collection, and whether the collection and reporting of race and ethnicity should be combined into a single question for purposes of 1071 data collection and reporting. The Bureau further seeks comment on whether an additional category for Middle Eastern or North African should be added and, if so, how this category should be included and defined. In addition, the Bureau seeks comment on whether disaggregated subcategories should be added for the aggregate White category, and if so, what disaggregated subcategories should be added and whether the applicant should be permitted to write in or otherwise provide other disaggregated subcategories or additional information. The Bureau seeks comment on whether the approach and design elements set forth in the 2015 National Content Test: Race and Ethnicity Report Analysis

[674] 31 CFR 1010.230(h)(1)(i). The CDD exclusion for certain POS transactions is based on the ''very low risk posed by opening such accounts at [a] brick and mortar store.'' Fin. Crimes Enf't Network, U.S. Dep't of Treasury, *Guidance: Frequently Asked Questions Regarding Customer Due Diligence Requirements for Financial Institutions,* at Q 29 (Apr. 3, 2018), *https://www.fincen.gov/sites/default/files/2018-04/FinCEN_Guidance_CDD_FAQ_FINAL_508_2.pdf.*

[675] FinCEN's CIP rule does not include a point of sale exclusion. While the rule permits *verification* of customer identity information within a reasonable time after an account is opened, the *collection* of required customer information must occur prior to account opening. *See* 31 CFR 1020.220(a)(2)(i)(A) and (ii). For credit card accounts, a bank may obtain identifying information about a customer from a third-party source prior to extending credit to the customer. 31 CFR 1020.220(a)(2)(i)(C).

would improve data collection or otherwise further section 1071's purposes, as well as whether it would pose any particular burdens or challenges for financial institutions collecting and reporting this information. Finally, the Bureau seeks comment on whether, similar to data collection pursuant to Regulation C, financial institutions should be limited to reporting a specified number of aggregate categories and disaggregated subcategories and, if so, whether such a limitation should be described in the sample data collection form.

Proposed comment 107(a)(20)–6 would explain that applicants must be permitted to provide a principal owner's ethnicity using aggregate categories and disaggregated subcategories and would also list the aggregate categories and disaggregated subcategories that applicants must be permitted to use. Proposed comment 107(a)(20)–6 would also explain that applicants must be permitted to select one, both, or none of the aggregate categories and as many disaggregated subcategories as the applicant chooses, even if the applicant does not select the corresponding aggregate category. Proposed comment 107(a)(20)–6 would state that, if an applicant provides ethnicity information for a principal owner, the financial institution reports all of the aggregate categories and disaggregated subcategories provided by the applicant, and it would provide an example. The proposed comment would state that a financial institution must also permit the applicant to refuse to provide ethnicity information for one or more principal owners and explain how a financial institution reports ethnicity information if an applicant declines to provide the information or fails to respond. Finally, the proposed comment would explain how a financial institution reports ethnicity information if an applicant has fewer than four principal owners, and it would provide an example.

Proposed comment 107(a)(20)–7 would explain that applicants must be permitted to provide a principal owner's race using aggregate categories and disaggregated subcategories and would also list the aggregate categories and disaggregated subcategories that applicants must be permitted to use. Proposed comment 107(a)(20)–7 would also explain that applicants must be permitted to select one, more than one, or none of the aggregate categories and as many disaggregated subcategories as the applicant chooses, even if the applicant does not select the corresponding aggregate category. Proposed comment 107(a)(20)–7 would explain that, if an applicant provides race information for a principal owner, the financial institution reports all of the aggregate categories and disaggregated subcategories provided by the applicant, and it would provide an example. The proposed comment would state that a financial institution must also permit the applicant to refuse to provide race information for one or more principal owners and explains how a financial institution reports race information if an applicant declines to provide the information or fails to respond. Finally, the proposed comment would explain how a financial institution reports race information if an applicant has fewer than four principal owners, and it would provide an example.

Proposed Rule—Collecting Sex

Federal, State, and local government agencies have been moving to providing options for designating sex beyond the binary options of male or female. At the Federal level, for example, the Department of State has announced that it is planning to offer the option of a new gender marker for non-binary, intersex, and gender non-conforming persons. It will be available for passports and Consular Reports of Birth Abroad as an alternative to male or female.[676] The Food and Drug Administration includes the gender options female, male, intersex, transgender, and ''prefer not to disclose'' on certain patient forms.[677] A number of States and the District of Columbia, as well as some local governments, offer an alternative sex or gender designation to male and female (*e.g.,* ''X'') on government-issued documents and forms such as drivers' licenses and identification cards, and in some cases birth certificates.[678]

The Supreme Court's opinion last year in *Bostock* v. *Clayton County* concluded that sex discrimination encompasses sexual orientation discrimination and gender identity discrimination, and that these forms of discrimination necessarily involve consideration of sex.[679] It reached this conclusion in the context of Title VII of the Civil Rights Act of 1964, as amended,[680] which prohibits sex discrimination in employment.[681] Following the issuance of the Supreme Court's opinion and building on a 2016 letter the Bureau sent to an advocacy organization,[682] the Bureau issued an interpretive rule clarifying that ECOA's and Regulation B's prohibition on discrimination based on sex protects against discrimination based on sexual orientation, gender identity, actual or perceived nonconformity with sex based or gender-based stereotypes, and the sex of people associated with the applicant.[683] Other Federal agencies have similarly clarified that other statutes that protect against

[676] *See* U.S. Dep't of State, *Proposing Changes to the Department's Policies on Gender on U.S. Passports and Consular Reports of Birth Abroad* (June 30, 2021), *https://www.state.gov/proposing-changes-to-the-departments-policies-on-gender-on-u-s-passports-and-consular-reports-of-birth-abroad/*.

[677] *See* Food & Drug Admin., *MedWatch forms FDA 3500 and 3500A* (Sept. 12, 2018) (approved under OMB No. 0910–0291), *https://www.fda.gov/media/76299/download* and *https://www.fda.gov/media/69876/download*.

[678] *See, e.g.,* Cal. S.B. 179, *Gender identity: female, male or nonbinary* (Oct. 16, 2017), *https://leginfo.legislature.ca.gov/faces/billTextClient.xhtml?bill_id=201720180SB179*; State of California Dep't of Motor Vehicles, *Driver's License or ID Card Updates, https://www.dmv.ca.gov/portal/driver-licenses-identification-cards/updating-information-on-your-driver-license-or-identification-dl-id-card/* (last visited July 23, 2021); Colo. Dep't of Revenue, *Change of Sex Designation, https://drive.google.com/file/d/1PeYZd7U43ar6Flg8lFAT1Etg1EPdLVUy/view*; State of Connecticut Dep't of Motor Vehicles, *Gender Designation on a License or Identification Card, https://portal.ct.gov/-/media/DMV/20/29/B-385.pdf*; District of Columbia Dep't of Motor Vehicles, *Procedure For Establishing or Changing Gender Designation on a Driver License or Identification Card* (June 13, 2017), *https://dmv.dc.gov/sites/default/files/dc/sites/dmv/publication/attachments/DC%20DMV%20Form%20Gender%20Self-Designation%20English.pdf, DC Driver License or Identification Card Application* (Jan. 2019), *https://dmv.dc.gov/sites/default/files/dc/sites/dmv/publication/attachments/DMV%20BOE%20Application_2-25-19.pdf*; Maine Bureau of Motor Vehicles, *Gender Designation Form* (Nov. 4, 2019), *https://www1.maine.gov/sos/bmv/forms/GENDER%20DESIGNATION%20FORM.pdf*; State of Nevada Dep't of Motor Vehicles, *Name Changes, https://dmvnv.com/namechange.htm*; State of New Jersey Dep't of Health, Off. of Vital Statistics and Registry, *Request Form and Attestation (REG–L2) to Amend Sex Designation to Reflect Gender Identity on a Birth Certificate—Adult* (Feb. 2019), *https://www.nj.gov/health/forms/reg-l2_1.pdf*; 2019 N.J. Sess. Law Serv. ch. 271; New Mexico Motor Vehicle Div., *Request for Sex Designation Change, http://realfile.tax.newmexico.gov/mvd10237.pdf*; New Mexico Dep't of Health, *Request to Change Gender Designation on a Birth Certificate* (Oct. 2019), *https://www.nmhealth.org/publication/view/form/5429/*; Virginia Dep't of Motor Vehicles, *Driver's License and Identification Card Application* (July 1, 2021), *https://www.dmv.virginia.gov/webdoc/pdf/dl1p.pdf*; Washington State Dep't of Licensing, *Change of Gender Designation* (Nov. 2019), *https://www.dol.wa.gov/forms/520043.pdf*; New York City Dep't of Homeless Services, Off. of Policy, Procedures and Training, *Transgender, Non-binary, and Intersex Clients* (July 15, 2019), *https://www1.nyc.gov/assets/dhs/downloads/pdf/dhs_policy_on_serving_transgender_non_binary_and_intersex_clients.pdf*.

[679] *See Bostock,* 140 S. Ct. 1731.

[680] 42 U.S.C. 2000e *et seq.*

[681] *Bostock,* 140 S. Ct. 1731.

[682] *See* Letter from Bureau of Consumer Fin. Prot., to Serv. & Advocacy for GLBT Elders (SAGE) (Aug. 30, 2016), *https://files.consumerfinance.gov/f/documents/cfpb_sage-response-letter_2021-02.pdf*.

[683] 86 FR 14363 (Mar. 16, 2021).

discrimination based on sex protect against discrimination based on sexual orientation and gender identity.[684]

Some other Federal agencies have also begun to re-consider how they collect information on sex by including questions about sexual orientation and gender identity as part of questions about sex. For example, the Census Bureau released the Household Pulse Survey,[685] which asked questions about sex assigned at birth, current gender identity, and sexual orientation. Specifically, the Household Pulse Survey includes the following three questions:

1. What sex were you assigned at birth, on your original birth certificate? (A respondent could provide a response of male or female.)
2. Do you currently describe yourself as male, female or transgender? (A respondent also could provide a response of ''none of these.'')
3. Which of the following best represents how you think of yourself?

In response to the third question, a respondent would select from the following responses: (1) Gay or lesbian; (2) Straight, that is not gay or lesbian; (3) Bisexual; (4) Something else; or (5) I don't know.

Other Federal agencies and initiatives have encouraged sexual orientation and gender identity data collection in health care settings.[686]

In light of the Bureau's recent ECOA interpretive rule, the continued evolution of categories used for sex data collection purposes at the Federal, State, and local government levels, and feedback on the SBREFA Outline, the Bureau is proposing to collect information about sex for purposes of section 1071 more expansively than was under consideration in the SBREFA Outline. Specifically, the Bureau is proposing adding an option for ''I prefer to self-describe'' (with the ability of the applicant to write in or otherwise provide additional information) for the principal owner's sex to accompany the existing ''male,'' ''female,'' and ''I do not wish to provide this information'' options currently used on the HMDA sample data collection form.

Proposed comment 107(a)(20)–8 would explain that an applicant must be permitted to provide a principal owner's sex using one or more of the following categories: Male, Female, and/or that the principal owner prefers to self-describe their sex. It would further explain that, if an applicant indicates that a principal owner prefers to self-describe their sex, the financial institution would be required to permit the applicant to provide additional information about the principal owner's sex. The financial institution would report to the Bureau the additional information provided by the applicant as free-form text.

Proposed comment 107(a)(20)–8 would state that a financial institution must permit an applicant to select as many categories as the applicant chooses and that the financial institution reports the category or categories selected by the applicant, including any additional information provided by the applicant, or reports that the applicant refused to provide the information or failed to respond. It would clarify that a financial institution is not permitted to report sex based on visual observation, surname, or any basis other than the applicant-provided information. Finally, proposed comment 107(a)(20)–8 would explain how a financial institution would report sex if an applicant has fewer than four principal owners, provide an example, and direct financial institutions to proposed appendix G for additional information on collecting and reporting a principal owner's sex.

The Bureau seeks comment on its proposed approach to requesting information about a principal owner's sex, including the opportunity for self-identification (by allowing the applicant to write in or otherwise provide additional information). The Bureau also seeks comment on whether the sample data collection form should list examples from which the applicant could choose when a principal owner self-identifies and an applicant writes in or otherwise provides additional information about the principal owner's sex, such as ''intersex,'' ''non-binary,'' or ''transgender.'' The Bureau also seeks comment on whether, alternatively, sex should be collected solely via the ''I prefer to self-describe'' option (with the ability to write in or otherwise provide additional information)—that is, without male and female being listed as options. The Bureau also seeks comment on whether applicants should be restricted from designating more than one category for a principal owner's sex (*e.g.,* from selecting both ''Female'' and ''I prefer to self-describe'').

The Bureau also seeks comment on whether financial institutions should be required to ask separate questions regarding sex, sexual orientation, and gender identity and, if so, what categories should be offered for use in responding to each question. For example, the Bureau requests comment on whether the sample data collection form should include the three questions and related responses (described above) from the Pulse Household Survey questionnaire, or a check box for ''Principal owner identifies as LGBTQ+'' with an accompanying space for providing additional information. The Bureau also seeks comment on whether it should adopt a data point to collect an applicant's lesbian, gay, bisexual, transgender, or queer plus (LGBTQ+)-owned business status, similar to the way it is proposing to collect minority-owned business status and women-owned business status as discussed in the section-by-section analysis of proposed § 1002.107(a)(18) and (19) above. The Bureau also seeks comment on whether including such questions would improve data collection or otherwise further section 1071's purposes, as well as whether it would pose any particular burdens or challenges for industry.

In addition, to ensure that a financial institution's representation of nondiscrimination on the basis of sex information provided by the applicant is consistent with the protections afforded under ECOA and Regulation B, the Bureau seeks comment on whether ambiguity exists for any responses that

[684] *See, e.g.,* 86 FR 32637 (June 22, 2021) (Department of Education interpreting Title IX of the Education Amendments of 1972); 86 FR 27984 (May 25, 2021) (Department of Health and Human Services interpreting section 1557 of the Affordable Care Act); Memorandum from Jeanine M. Worden, Acting Assistant Secretary for Fair Housing and Equal Opportunity, *Implementation of Executive Order 13988 on the Enforcement of the Fair Housing Act* (Feb. 11, 2021), *https://www.hud.gov/sites/dfiles/PA/documents/HUD_Memo_EO13988.pdf* (Department of Housing and Urban Development interpreting the Fair Housing Act).

[685] U.S. Census Bureau, *Phase 3.2 Household Pulse Survey* (undated), *http://www2.census.gov/programs-surveys/demo/technical-documentation/hhp/Phase_3.2_Household_Pulse_Survey_FINAL_ENGLISH.pdf.*

[686] *See, e.g.,* Off. of Disease Prevention & Health Promotion, *Healthy People* (2020), *https://www.healthypeople.gov/2020/topics-objectives/topic/lesbian-gay-bisexual-and-transgender-health*; Off. of the Nat'l Coordinator of Health Info. Tech., *2021 Interoperability Standards Advisory* (2021), *https://www.healthit.gov/isa/sites/isa/files/inline-files/2021-ISA-Reference-Edition.pdf*; Ctrs. for Disease Control & Prevention, *Collecting Sexual Orientation and Gender Identity Information* (Apr. 1, 2020), *https://www.cdc.gov/hiv/clinicians/transforming-health/health-care-providers/collecting-sexual-orientation.html.*

Additionally, on April 1, 2021, the Department of Health and Human Services' Administration for Community Living (ACL) published a notice of its submission of a revised National Survey of Older Americans Act Participants for OMB review and clearance. ACL proposed to revise the existing survey to add a new rotating module on COVID–19. In response to an earlier notice related to the survey, ACL received a comment asking it to include survey response options that include ''transgender'' or ''other'' with a write-in option. In response to comments it received on an earlier notice, ACL indicated that it was supporting an ad hoc panel that would be reviewing measures and methodological issues related to measuring sex as a non-binary construct, gender identity, and sexual orientation. ACL indicated that it expected the panel to produce a consensus report in December 2021, and that ACL anticipated using the report as a basis for testing new survey questions. 86 FR 17153 (Apr. 1, 2021).

an applicant might reasonably use to self-describe a principal owner's sex for purposes of section 1071 (for example, intersex status) and if clarification may be needed.

Finally, the Bureau also requests information on Federal, State, and local government initiatives, as well as private sector initiatives, involving the use of sex categories other than male and female and the inclusion of questions regarding sexual orientation and gender identity in demographic information.

Proposed Rule—Collecting Ethnicity and Race via Visual Observation or Surname in Certain Circumstances

The Bureau is proposing that financial institutions be required to collect and report at least one principal owner's ethnicity and race based on visual observation and/or surname in certain circumstances. Specifically, a financial institution would be required to report at least one principal owner's ethnicity and race based on visual observation and/or surname if the financial institution meets in person with one or more of the applicant's principal owners and the applicant does not provide ethnicity, race, or sex information for at least one principal owner in response to the financial institution's inquiry pursuant to proposed § 1002.107(a)(20).

Although the Bureau indicated in the SBREFA Outline that it was not considering proposing that financial institutions report a principal owner's race, sex, and ethnicity based on visual observation and/or surname, the Bureau asked SERs to provide feedback about the potential challenges, costs, and benefits of implementing such a requirement for applicants who do not self-report the information. The Bureau also asked SERs to provide feedback about how those potential challenges and costs would change if reporting based on visual observation and/or surname was required only if the applicant is a sole proprietor but not if the applicant is an entity. Although many SERs and commenters opposed reporting ethnicity, race, or sex on the basis of visual observation and/or surname, some other commenters said that financial institutions should be required to report based on visual observation and/or surname in certain circumstances. Additionally, one SER specifically noted that the Bureau would need to account for lower self-reporting rates than are achieved for HMDA reporting. Consistent with this feedback, the Bureau notes that demographic response rates in the SBA's Paycheck Protection Program (PPP) data are much lower when compared to ethnicity, race, and sex response rates in HMDA data.[687] For instance, roughly 71 percent of respondents in the PPP data did not provide a response for race, compared to only 14.7 percent in the HMDA data. Roughly 66 percent of respondents in the PPP data did not provide a response for ethnicity, compared to only 14.3 percent in the HMDA data.[688]

Without a visual observation and/or surname collection requirement, the Bureau believes that meaningful analysis of the 1071 principal owner race and ethnicity data could be difficult, significantly undermining section 1071's fair lending purpose. Comprehensive and accurate collection and reporting of data is also vital to section 1071's business and community development purpose. Historically, one challenge under HMDA has been the reluctance of some applicants to voluntarily provide requested demographic information, such as race and ethnicity. The requirement in Regulation C to collect race, sex, and ethnicity on the basis of visual observation or surname is an important tool to address that challenge, and the Bureau believes that the requirement has resulted in more robust response rates in the HMDA data. The Bureau has considered the feedback in response to the SBREFA Outline and this related information and has determined that not proposing a requirement to report based on visual observation and/or surname could diminish the utility of the 1071 data.

Accordingly, the Bureau has determined that the appropriate approach to further section 1071's purposes is to propose to require that financial institutions collect at least one principal owner's race and ethnicity (but not sex) on the basis of visual observation and/or surname when the applicant does not provide ethnicity, race or sex information for at least one principal owner and the financial institution meets in person with one or more principal owners. In other words, a financial institution would not be required to collect race and ethnicity via visual observation and/or surname if the applicant provides *any* demographic information regarding any principal owner. The Bureau is concerned that, for applicants with multiple principal owners, the financial institution may not be able to determine whether the applicant has provided the demographic information, for example the sex, of the principal owner who meets in person with the financial institution or for another principal owner. The Bureau seeks comment on this proposed approach. The Bureau also seeks comment on whether a financial institution should be required to collect a principal owner's ethnicity and/or race via visual observation and/or surname if the applicant has only one principal owner, the applicant does not provide the principal owner's information, and the financial institution meets in person with the principal owner. In this situation, the financial institution would be able to ''match'' any demographic information that the applicant provides with the correct the principal owner because there is only one principal owner.

Proposed comment 107(a)(20)–9 would explain that a financial institution is required to report ethnicity and race (but not sex) based on visual observation and/or surname in certain circumstances. The proposed comment would explain that if a financial institution meets in person with one or more of an applicant's principal owners and the applicant does not provide ethnicity, race, or sex information for at least one principal owner, the financial institution must report at least one principal owner's ethnicity and race (but not sex) based on visual observation, surname, or a combination of both visual observation and surname. It would further explain that a financial institution is not required to report based on visual observation and/or surname if the principal owner only meets in person with a third party through whom the applicant is submitting an application to the financial institution and would provide an example.

Proposed comment 107(a)(20)–10 would clarify that a financial institution meets with a principal owner in person if an employee or officer of the financial institution or one of its affiliates has a meeting or discussion with the applicant's principal owner about an application and can visually observe the principal owner. The proposed comment would also provide examples of situations where the financial institution meets in person with a principal owner and where it does not. The Bureau requests comment on this approach and whether additional or different examples are necessary.

Proposed comment 107(a)(20)–11 would clarify that a financial institution

[687] Small Bus. Admin., *Paycheck Protection Program Weekly Reports 2021, Version 11,* at 9 (effective Apr. 5, 2021), *https://www.sba.gov/sites/default/files/2021-04/PPP_Report_Public_210404-508.pdf.* PPP data was taken from 2021 loans for which the collection form for principal owner demographics was included on the PPP application itself and, for most of that time, was featured on the first page of the application.

[688] *Id.*

uses only aggregate categories when reporting ethnicity and race based on visual observation and/or surname and would direct financial institutions to proposed appendix G for additional information on collecting and reporting ethnicity and race based on visual observation and/or surname. However, the Bureau requests comment on whether financial institutions should be permitted, but not required, to use the disaggregated subcategories (in addition to the required aggregate categories) when reporting race and ethnicity based on visual observation and/or surname.

In addition to the specific matters identified above, the Bureau seeks comment on its proposed approach to this data point, the proposed methods of collecting and reporting the data, and requests comment on whether additional clarification regarding any aspect of this data point is needed.

107(a)(21) Number of Principal Owners

ECOA section 704B(e)(2)(H) authorizes the Bureau to require financial institutions to compile and maintain ''any additional data that the Bureau determines would aid in fulfilling the purposes of [section 1071].'' The Bureau believes that collection of the number of principal owners of an applicant would aid in fulfilling the purposes of section 1071, as explained below.

The Bureau did not address the number of principal owners as a potential data point under consideration in the SBREFA Outline, although it did seek feedback on several questions related to the number of applicants' principal owners.[689] To facilitate collection of the ethnicity, race, and sex of applicants' principal owners pursuant to proposed § 1002.107(a)(20), the Bureau is proposing that financial institutions collect and report the number of an applicant's principal owners.

Section 1071 uses the term ''principal owner'' but does not define it. Proposed § 1002.102(o) would define a principal owner as a natural person who directly owns 25 percent or more of the equity interests of a business. Thus, under this proposed definition, it is possible that an applicant would have no principal owners or between one and four principal owners.

As explained in proposed comment 107(a)(21)–1, a financial institution would be able to collect an applicant's number of principal owners by requesting the number of principal owners from the applicant or by determining the number of principal owners from information provided by the applicant or that the financial institution otherwise obtains. If the financial institution asks the applicant to provide the number of its principal owners pursuant to proposed § 1002.107(a)(21), the financial institution must provide the definition of principal owner set forth in proposed § 1002.102(o). If permitted pursuant to proposed § 1002.107(c)(2), a financial institution could report an applicant's number of principal owners based on previously collected data.

The Bureau believes that an applicant is likely to know how many principal owners it has and should not have significant difficulties or objections to providing this basic piece of information. Moreover, the Bureau understands that financial institutions are already obtaining information about principal owners. Further, this additional information would aid in fulfilling the purposes of section 1071 as it may provide necessary context for other data points. For example, if an applicant reports the ethnicity, race, and sex for one principal owner, having the total number of principal owners would permit the Bureau and other data users to know whether that owner's demographics represents the demographics of the entirety of the applicant's principal ownership or merely one quarter of it. This information would help data users in fulfilling both the fair lending and business and community development purposes of section 1071.

Proposed comment 107(a)(21)–2 would clarify the relationship between the proposed requirement to collect and report the number of principal owners in proposed § 1002.107(a)(21) with the proposed requirement to report verified information in proposed § 1002.107(b). The proposed comment would state that the financial institution may rely on an applicant's statements in collecting and reporting the number of the applicant's principal owners. The financial institution would not be required to verify the number of principal owners provided by the applicant, but if the financial institution verifies the number of principal owners, then the financial institution would be required to report the verified number of principal owners.

Proposed comment 107(a)(21)–3 would state that pursuant to proposed § 1002.107(c)(1), a financial institution is required to maintain procedures reasonably designed to collect applicant-provided information, which includes the applicant's number of principal owners. However, if a financial institution is nonetheless unable to collect or determine the number of principal owners of the applicant, the financial institution would report that the number of principal owners is ''not provided by applicant and otherwise undetermined.''

The Bureau seeks comment on its proposed approach to this data point. The Bureau also seeks comment on whether the Bureau should instead, or additionally, require collection and reporting of similar information about owners (rather than principal owners). For example, should the Bureau require that financial institutions collect and report the number of owners that an applicant has that are not natural persons, in order to obtain a more complete picture of the applicant's ownership structure?

107(b) Verification of Applicant-Provided Information

ECOA section 704B(e)(1) provides that ''[e]ach financial institution shall compile and maintain, in accordance with regulations of the Bureau, a record of the information provided by any loan applicant pursuant to a request under [section 704B(b)].''[690] Section 1071 does not impose any requirement for a financial institution to verify the information provided by an applicant.

In the SBREFA Outline, the Bureau did not include a general statement about the issue of verification of applicant-provided data points. For certain data points such as time in business, however, the Outline did explain that the Bureau was considering proposing that if the financial institution did not verify the information provided by the applicant, the financial institution would report the information provided by the applicant. If the financial institution did verify the information provided by the applicant, the Outline explained that the financial institution would report the verified information. The Outline did not state that the Bureau was considering proposing that a financial institution would be required to verify any of the applicant-provided data points.

As explained in the section-by-section analysis of proposed § 1002.107(a) above, a number of SERs urged the Bureau to require collection and reporting of a number of data points based only on information as provided by the applicant.[691] No SERs stated that they thought verification should be generally required. The industry stakeholders who commented on this issue asked that the Bureau not require

[689] SBREFA Outline at 32–33.

[690] ECOA section 704B(e)(1).

[691] SBREFA Panel Report at 26.

verification of applicant-provided information. The Bureau did not receive any comments on this issue from community group stakeholders.

The Bureau is proposing in § 1002.107(b) that unless otherwise provided in subpart B, the financial institution would be able to rely on statements of the applicant when compiling data unless it verifies the information provided, in which case it would be required to collect and report the verified information. Proposed comment 107(b)–1 would explain that a financial institution may rely on statements made by an applicant (whether made in writing or orally) or information provided by an applicant when compiling and reporting data pursuant to the 1071 rule for applicant-provided data; the financial institution would not be required to verify those statements. Proposed comment 107(b)–1 would further explain, however, that if the financial institution does verify applicant statements for its own business purposes, such as statements relating to gross annual revenue or time in business, the financial institution would report the verified information. The comment would go on to explain that, depending on the circumstances and the financial institution's procedures, certain applicant-provided data could be collected without a specific request from the applicant. For example, gross annual revenue could be collected from tax return documents. In addition, the proposed comment would make clear that applicant-provided data are the data that are or could be provided by the applicant, including those in proposed § 1002.107(a)(5) through (7), and (13) through (21). Finally, proposed comment 107(b)–1 would provide a cross reference to proposed comment 107(c)(2)–3, which would discuss the possible reuse of certain previously collected data.

The Bureau believes that requiring verification of applicant-provided data points would greatly increase the operational burden of the 1071 rule, and that relying on applicant-provided data would ensure sufficient accuracy to carry out the purposes of section 1071. As discussed above, section 1071 does not speak to verification; rather it refers only to compiling and maintaining a record of certain information provided by an applicant. However, the Bureau believes that requiring financial institutions to collect and report (for the 1071 rule) information that they have already verified would not add operational difficulty, and would enhance the accuracy and usefulness of the data, thereby furthering the purposes of section 1071. The Bureau is implementing this requirement pursuant to its authority under ECOA section 704B(g)(1) to prescribe rules in order to carry out, enforce, and compile data pursuant to section 1071, and as an interpretation of the statutory phrase ''compile and maintain'' in ECOA section 704B(e)(1). In the Bureau's view, the verification that the financial institution chooses to carry out is part of compiling and maintaining the information provided by the applicant, and this requirement will improve the quality and usefulness of the resulting 1071 data set.

As discussed above, many SERs and other stakeholders opposed the inclusion of a verification requirement, and the Bureau has taken their input into account when crafting this proposed provision.

The Bureau seeks comment on its proposed approach to verification of the 1071 data points, including the specific guidance that would be presented in comment 107(b)–1. The Bureau also seeks comment on whether financial institutions should be required to indicate whether particular data points being reported have been verified or not.

107(c) Time and Manner of Collection

107(c)(1) In General

Background

Although the definition of ''application'' triggers a financial institution's *duty* to collect 1071 data, the application definition does not necessarily govern *when* that data must be collected. The language and structure of section 1071—which applies to ''applications'' from ''applicants''—indicates that the data must be collected sometime during the application process, but does not provide further detail.[692]

Financial institutions have expressed concern about when applicant-provided data must be collected, and particularly the timing of collecting applicants' protected demographic information (that is, whether the applicant is a minority-owned business or a women-owned business, and the ethnicity, race, and sex of the applicant's principal owners, pursuant to proposed § 1002.107(a)(18) through (20)). Collecting this protected demographic information from applicants for purposes of section 1071 has been a particular concern for financial institutions, as financial institutions currently are generally prohibited from collecting such information except in narrow circumstances.[693] As such, its required collection under section 1071 will be a departure from current practice for most financial institutions.

SBREFA Proposal Under Consideration and Feedback Received

In the SBREFA Outline, the Bureau stated that it was not currently considering specifying a particular time period in which financial institutions must seek to collect 1071 data from applicants.[694] It also conveyed that it was seeking to provide financial institutions discretion and flexibility to time their 1071 data collection at a point during the application process that works best for their processes and relationships with applicants and to avoid unnecessary costs, while still fulfilling section 1071's purposes. The Bureau also noted that it had considered possible alternatives of requiring financial institutions to collect 1071 data within or by a specified time period, such as simultaneous with the triggering of an ''application,'' before obtaining a ''completed application,'' or before notifying the applicant of action taken.

Most SERs that addressed the issue of timing for data collection indicated that they plan to collect 1071 data, and particularly applicants' protected demographic information (as would be required under proposed § 1002.107(a)(18) through (20)), early in the application process and likely at the time an application is initially being submitted.[695] These SERs felt that the longer they wait to request 1071 data, the more difficult or infeasible it will be to gather the information from applicants. Another SER urged the Bureau to give financial institutions flexibility to explore optimal timing for collection of 1071-required protected demographic information in order to maximize the response rate without discouraging applicants from pursuing the application. This SER suggested that protected demographic information should be collected during the application process, but before the application is considered complete. The SBREFA Panel recommended that the Bureau seek comment on whether it is necessary to specify a time period specifically for the collection of 1071-required protected demographic information, and if so, what would be the best period to designate.[696]

[692] *See, e.g.,* ECOA section 704B(b) (''[I]n the case of any *application* to a financial institution . . . .'') and 704B(c) (''Any *applicant* . . . may refuse to provide any information requested . . . .'') (emphases added)).

[693] *See* § 1002.5(b).

[694] SBREFA Outline at 35–36.

[695] SBREFA Panel Report at 32.

[696] *Id.* at 47.

Nearly all industry stakeholders to comment on this issue supported the Bureau not specifying a time period, and instead giving financial institutions discretion to set their own optimal timing for the collection of applicant-provided 1071 data. The commenters noted that given the variety of products, financial institutions, and business models in small business lending, a one-size-fits-all approach would be unworkable and could disrupt financial institutions' processes. Some commenters also highlighted the complexity of small business lending applications and stated that flexible collection would provide greater simplicity, reduce burden, and allow for more accurate reporting, particularly where not all the data points are available at the time of collection. A few commenters sought flexibility due to concerns that if protected demographic information is collected early on in the process, an applicant would believe that information would be used to discriminate against them. One commenter suggested looking at FinCEN's customer due diligence rule, which allows for information collection at the time of closing. Although industry commenters generally favored flexibility, several stated they would likely collect 1071 data as early as possible in order to ensure data quality and collection. One stakeholder stated that applicant-provided data would be impossible to get if an application is withdrawn, incomplete, or denied before the required data are requested. Another industry commenter suggested the Bureau allow flexibility, but provide a safe harbor for financial institutions that collect applicant-provided data points on or with the application.

Many of the commenters seeking flexibility stated that point-of-sale (POS) applications would be particularly problematic with a rigid timing requirement. POS applications include those private label credit cards or other products offered through retailers in which the financial institution itself does not interact with the applicant at the time of application. POS applications are taken in a variety of different settings and locations, such as at the checkout line, online, or at customer service desks. Commenters urged that they would need additional flexibility for a POS application to request 1071 data, such as at some point reasonably following application submission. Commenters cited concerns about the accuracy and completeness of data collected in a POS application: Interactions are with retailer's employees who may not be able to answer questions about the data collection, interactions often take place in a public place (which may lead to erroneous answers or refusals to answer), and the person submitting a POS application may not have relevant knowledge to respond to the 1071-required questions, leading to delayed or abandoned applications. Commenters also expressed concern that reporting of POS applications would reflect the retailer's lending footprint, not the financial institution's, and so lead to incorrect assumptions about the financial institution's lending.

A number of stakeholders, including community groups and several financial institutions, urged the Bureau to specify a time period for the collection of 1071 data, stating that failure to do so would undermine the accuracy of the data. The commenters stated that complete flexibility would result in inconsistent and unreliable data since financial institutions would be collecting the data at different stages of the application process. The commenters stated that financial institutions that wait to collect the data would have difficulty obtaining applicant-provided information if the application was withdrawn, incomplete, or denied. The commenters also noted that discrimination is likely to occur in the early stages of the application process, and would not be captured if financial institutions are permitted to delay data collection. One commenter stated that requiring collection at the time of application could also promote non-discriminatory treatment as it would impress upon lenders and applicants the need for fair treatment. An industry commenter stated that not specifying a time period may lead to financial institution regulatory paralysis or confusion about when to collect 1071 data from applicants.

Among commenters that recommended a specific time period for collection, many suggested collecting applicant-provided data at the time of an application or otherwise ''upfront.'' One commenter noted that 1071-required data could be built into the application itself. On the other hand, several commenters suggested 1071 data should be collected any time before an application is considered complete or, one commenter suggested, when financial institutions know that 1071 collection will be required. The commenters stated that this would be the time period during which applicants are most likely to voluntarily provide the data, would ensure comparable data across lenders, and would still provide financial institutions flexibility to account for various application processes. One commenter suggested testing and focus groups to determine optimal timing. Otherwise, the commenter suggested 1071 data be collected before a financial institution disburses funds to the applicant.

Proposed Rule

The Bureau is proposing § 1002.107(c)(1), which would require a covered financial institution to maintain procedures to collect applicant-provided data under proposed § 1002.107(a) at a time and in a manner that is reasonably designed to obtain a response. The Bureau agrees with SERs and other stakeholders about the benefits of providing a flexible approach concerning when applicant-provided data must be collected during the application process. As noted by some commenters, given the variety of application processes in the small business lending space, requiring 1071 data collection to occur within a narrow window may affect data quality and disrupt financial institution practices. On the other hand, the Bureau believes that safeguards are necessary to ensure that financial institutions are not evading or delaying their obligation to collect 1071 data in a manner that detrimentally affects response rates. In light of these considerations, the Bureau is proposing an approach that would maintain flexibility, but require a financial institution to maintain procedures to collect applicant-provided data at a time and in a manner that is reasonably designed to obtain a response. This proposal thus implements the flexible approach under consideration in the SBREFA Outline, though with additional safeguards.

Proposed comments 107(c)(1)–1 and –2 would clarify the meaning of financial institution ''procedures'' and reiterate a financial institution's latitude to establish procedures concerning the timing and manner that it collects applicant-provided data, provided that those procedures are reasonably designed to collect the applicant-provided data in proposed § 1002.107(a).

Proposed comment 107(c)(1)–3 would clarify what constitutes ''applicant-provided data'' in proposed § 1002.107(c)(1). The proposed comment would also clarify that applicant-provided data does not include data that is generated or supplied only by the financial institution. The Bureau believes this clarification would address commenter concerns that certain data points collected early in the process may not be as accurate (or available) as data available at a later time—for example,

information on action taken is only available late in the application process.

Proposed comment 107(c)(1)–4 would provide additional guidance on financial institutions' procedures that are reasonably designed to obtain a response. As noted in proposed comment 107(c)(1)–4, a financial institution would assess on a periodic basis whether its procedures are reasonably designed. One way a financial institution may be able to assess whether its procedures are reasonably designed would be, once 1071 data are made publicly available, to compare its response rate with similarly situated financial institutions (for example, those that offer similar products, use a similar lending model, or are of a similar size).[697] The Bureau also anticipates that the response rate will differ depending on the data point: Some applicant-provided data points (for example, time in business) may have a higher response rate than other applicant-provided data points (such as a principal owner's race, sex, and ethnicity). The key is for a financial institution to assess on a periodic basis whether its procedures are reasonably designed to obtain a response.

Proposed comments 107(c)(1)–5 and –6 would provide examples of procedures that generally are and are not reasonably designed to obtain a response. Although the inquiry requires a fact-based determination, the Bureau believes providing examples and further guidance of practices that likely are and are not reasonably designed to obtain a response would facilitate compliance and promote best practices. For example, the Bureau believes that, as a general matter, once there is a ''covered application,'' the earlier a financial institution seeks to collect applicant-provided information, the greater the likelihood of obtaining an applicant response (particularly for covered applications that are later withdrawn or left incomplete). Thus, the Bureau believes that, as a general matter, a procedure reasonably designed to obtain a response is one in which a financial institution requests applicant-provided data at the time of a covered application. For example, it could request these data in connection with a written application form, provided any collection form requesting applicants' protected demographic information pursuant to proposed § 1002.107(a)(18) through (20) is separate from the application form and other documents used to collect other information related to the application, as would be required by proposed § 1002.111(b). Collecting applicant-provided data after a covered application is submitted—for example, while the application is being completed through the submission of additional documents and verifications—may be reasonably designed to obtain a response depending on the particular financial institution's procedures, with earlier collections more likely to be reasonably designed. The Bureau believes providing such compliance examples would incentivize early collection and be consistent with the practice many SERs and other industry commenters indicated they planned to follow in any event. While some commenters stated that an applicant may be reluctant to respond to early collection due to concerns that the information may be used to discriminate against them, the Bureau believes those concerns can be addressed through the use of a data collection form (such as the sample collection form in proposed appendix E) that would explain to applicants the reason the information is being collected. Moreover, the Bureau notes that financial institutions regularly collect data required by HMDA and Regulation C at the time of application without significant issue and that the sample data collection form in Regulation C similarly provides an explanation to applicants as to the reason protected demographic information is being collected.

Conversely, the Bureau believes that, as a general matter, it is unlikely that small business applicants will respond to data requests that occur simultaneous with or after notifying an applicant of action taken on the covered application. Depending on the particular facts, however, these procedures may be reasonably designed to obtain a response; for example, if the financial institution has evidence or a reason to believe that under its procedures the response rate would be similar to or better than other alternatives. Although a fact-based determination, proposed comment 107(c)(1)–6 would clarify that such procedures would generally not be considered ''reasonably designed.''

Proposed comment 107(c)(1)–7 would explain that a financial institution reports updated applicant-provided data if it obtains more current data during the application process. Proposed comment 107(c)(1)–8 would provide guidance in the event a financial institution changes its determination regarding an applicant's status as a small business.

Many industry commenters discussed the need for additional flexibility specifically for POS applications. The Bureau understands that many (though not all) POS applications, particularly those for smaller credit amounts or to purchase particular goods in a store, are often submitted on-site at POS and decisioned in real time. Under proposed § 1002.107(c)(1) and associated commentary, the Bureau anticipates that most financial institutions would generally collect applicant-provided 1071 data at POS, and not at some later time after the credit request has been decisioned and the applicant has left the store, as suggested by some commenters. Despite the comments on this issue, the Bureau is not proposing a different approach for collecting applicant-provided data specifically for POS applications. Commenters raised concerns about retail employees seeking to collect 1071 required data in a public setting. However, the Bureau believes that financial institutions can develop procedures to accommodate collection in this setting, including (as discussed above) by using the sample collection form developed by the Bureau. The Bureau also does not believe that any specialized knowledge is necessary to collect 1071 data, and so believes that retail employees can collect the information. Although it is possible that the accuracy of the data collected in POS applications may be more prone to errors, as some commenters allege, the Bureau believes that having such data, even with decreased accuracy, would be preferable to not having any applicant-provided data for such applications.[698]

Several industry commenters suggested the Bureau look to FinCEN's customer due diligence (CDD) rule, which excludes from certain of its requirements POS transactions to provide credit products solely for the purchase of retail goods/services up to a limit of $50,000.[699] The Bureau is not proposing to take this approach given the different purposes and requirements of the CDD rule and section 1071. The purpose of the CDD rule is to improve financial transparency and prevent criminals and terrorists from misusing companies to disguise their illicit activities and launder their ill-gotten

[697] As discussed in greater detail in part VI below, the Bureau is proposing not to determine what data to include in the public application-level 1071 data until after it receives at least one full year of 1071 data reported by financial institutions. Following the compliance date of the final rule, the Bureau proposes to issue a policy statement setting forth its intended modifications and deletions to the public application-level 1071 data. Of course, the Bureau acknowledges that the availability and robustness of a peer analysis would also depend on the extent to which 1071 data are made publicly available.

[698] In order to help identify such transactions, the Bureau is proposing to collect information about the application recipient. *See* proposed § 1002.107(a)(4).

[699] 31 CFR 1010.230(h)(1)(i).

gains.[700] Under the CDD rule, covered financial institutions must identify and verify the identity of natural persons (known as beneficial owners) of legal entity customers who own, control, and profit from companies when those companies open accounts.[701] The CDD exclusion for certain POS transactions is based on the ''very low risk posed by opening such accounts at [a] brick and mortar store.'' [702] While the CDD rule (and the customer identification program (CIP) rule [703]) focus on accounts (including certain originated loans), obtaining data on denials is essential to 1071's purposes. Moreover, unlike the CDD and CIP rules, which require covered financial institutions to collect certain essential information, section 1071 only requires that financial institutions seek to collect applicants' protected demographic information, and permits applicants to refuse to provide that information. Given these key differences, the Bureau is not proposing to follow the CIP and CDD rules concerning timing of collection or the exclusion of certain POS applications.

The Bureau seeks comment on proposed § 1002.107(c)(1) and associated commentary. As recommended by the SBREFA Panel, the Bureau seeks comment on whether it is necessary to specify a time period specifically for the collection of protected 1071 demographic information, and if so, what time period the Bureau should designate. The Bureau also seeks comment on the examples set forth in proposed comments 107(c)(1)–5 and –6, and whether it would be useful to provide additional examples of procedures that are and that are not reasonably designed to obtain a response. In addition, the Bureau seeks comment on its proposed approach for POS applications, including its proposal that would not make any particular exceptions for the timing and manner of 1071 data collection for POS applications.

107(c)(2) Previously Collected Data

In the SBREFA Outline, the Bureau emphasized that it was seeking to provide financial institutions with discretion and flexibility in the timing of 1071 data collection, in light of considerations including their relationships with applicants and the need to avoid unnecessary costs.[704] The Bureau did not specifically discuss whether a financial institution could meet its 1071 obligations on a covered application by reusing certain data it had previously collected from the same applicant. In response to the Bureau's proposal under consideration concerning timing of collection of certain 1071 data, however, a commenter suggested financial institutions provide annual certification of 1071 data where there is an ongoing customer relationship. The commenter noted that the data are unlikely to change within a year, there may be multiple transactions during that time, and it would avoid financial institutions and applicants having to provide the information during the application process, saving time and expense.

The Bureau is proposing § 1002.107(c)(2), which would permit, but not require, a financial institution to reuse previously collected data to satisfy proposed § 1002.107(a)(13) through (21) if the data were collected within the same calendar year as the current covered application and the financial institution has no reason to believe the data are inaccurate. The Bureau believes that, absent a reason to suspect otherwise, recently collected 1071 data are likely to be reliable. Additionally, the Bureau believes that a flexible approach giving financial institutions discretion to reuse these data is consistent with the approach the Bureau proposed at SBREFA. Although proposed § 1002.107(c)(2) would apply to certain data collected within the same calendar year, nothing prevents a financial institution from confirming with the applicant whether information collected more than a year ago from the applicant remains accurate.

Proposed comment 107(c)(2)–1 would provide an example of how certain previously collected data can be reused by a financial institution. Proposed comment 107(c)(2)–2 would identify the particular data that can be reused. The comment would also clarify that other data required by proposed § 1002.107(a) could not be reused, as those data points are specific and unique to each covered application. Proposed comment 107(c)(2)–3 would clarify instances where data have not been ''previously collected'' and so cannot be reused under proposed § 1002.107(c)(2).

Proposed comment 107(c)(2)–4 would provide guidance on when information is considered collected in the same calendar year, and so may be reused by a financial institution in certain circumstances. In particular, the proposed comment discusses applications that span more than one calendar year.

Proposed comment 107(c)(2)–5 would provide clarity and an example of when a financial institution has reason to believe data may be inaccurate, and so cannot be reused for a subsequent covered application. Finally, proposed comments 107(c)(2)–6 and –7 would provide guidance on when data regarding minority-owned business status, women-owned business status, and data on the principal owners' ethnicity, race, and sex may be reused by a financial institution in a subsequent covered application.

The Bureau seeks comment on § 1002.107(c)(2) and associated commentary. The Bureau also seeks comment on whether a period of one calendar year to reuse certain previously collected data is appropriate or whether it should be extended to a longer period (such as two or three years). In addition, the Bureau seeks comment on whether financial institutions should be required to notify applicants that information they provide (including, in particular, minority-owned business status, women-owned business status, and the principal owners' ethnicity, race, and sex) could be reused for subsequent applications.

Section 1002.108 Firewall

Background

ECOA section 704B(d) generally restricts the access of certain individuals at a financial institution or its affiliates to certain information provided by an applicant pursuant to section 1071. The Bureau calls this requirement in 704B(d) a ''firewall.'' More specifically, 704B(d)(1) states that ''[w]here feasible,'' underwriters and other officers and employees of a financial institution or its affiliates ''involved in making any determination concerning an application for credit'' cannot have access to any information provided by the applicant pursuant to a request under 704B(b). That is, the statute limits access not only by underwriters and persons making an underwriting decision but also by anyone else involved in making any determination concerning an application. However, it does not expressly define the term ''feasible'' or provide clarification regarding what it means to be involved in making any

[700] *See* FinCEN, *Information on Complying with the Customer Due Diligence (CDD) Final Rule, https://www.fincen.gov/resources/statutes-and-regulations/cdd-final-rule* (last visited Aug. 6, 2021).

[701] *Id.*

[702] FinCEN, *Guidance,* at Q 29 (Apr. 3, 2018), *https://www.fincen.gov/sites/default/files/2018-04/FinCEN_Guidance_CDD_FAQ_FINAL_508_2.pdf.*

[703] FinCEN's CIP rule does not include a point of sale exclusion. While the rule permits *verification* of the identity of the customer within a reasonable time after the account is opened, the *collection* of required customer information must occur prior to account opening. *See* 31 CFR 1020.220(a)(2)(i)(A) and (ii).

[704] SBREFA Outline at 35–36.

determination concerning an application for credit.

Additionally, under ECOA section 704B(d)(2), if the financial institution determines that an underwriter, employee, or officer involved in making a determination ''should have access'' to any information provided by the applicant pursuant to a request under 704B(b), the financial institution must provide a notice to the applicant of the underwriter's access to such information, along with notice that the financial institution may not discriminate on the basis of such information. Section 704B(d)(2) does not expressly define or describe when an underwriter, employee, or officer ''should have access,'' nor does it explain the relationship, if any, between when a financial institution determines that an individual ''should have access'' under 704B(d)(2) and whether it is ''feasible'' to implement and maintain a firewall under 704B(d)(1).

The Bureau believes that ECOA section 704B(d) contains significant ambiguities with respect to how financial institutions, in practical terms, should determine how to implement a firewall to limit underwriters', employees', and officers' access to the information provided by applicants pursuant to section 704B(b). Indeed, based on feedback from SERs and other commenters, the Bureau believes that in many instances financial institutions that find it not ''feasible'' to implement and maintain a firewall will be the same institutions determining that relevant individuals ''should have access'' to the information provided by an applicant pursuant to 704B(b). The Bureau further believes that reading these two provisions in isolation from each other would result in significant confusion and challenges, particularly for smaller financial institutions.

Accordingly, the Bureau believes that section 1071's firewall requirement is best implemented by reading the ''should have access'' language in ECOA section 704B(d)(2) in conjunction with the ''feasibility'' language in 704B(d)(1). In 704B(d)(1), if it is feasible to implement and maintain a firewall, then underwriters, other employees, and officers shall not have access to the information subject to the firewall; but it is not feasible to implement and maintain a firewall if an underwriter, other employee, or officer subject to the firewall should have access to that information. If it is not feasible to implement and maintain a firewall, then that underwriter, other employee, or officer who should have access is permitted to have access so long as the financial institution provides a notice to the applicant.

As discussed in greater detail above in E.2 of the *Overview* to this part V, the Bureau also believes that section 1071 is ambiguous with respect to the meaning of ''any information provided by the applicant pursuant to a request under subsection (b).'' On the one hand, ECOA section 704B(b)(1) directs financial institutions to inquire whether a business is ''a women-owned, minority-owned, or small business,'' so the phrase could be interpreted as referring only to those three data points. Section 704B(e), however, indicates that the scope of 704B(b) is much broader. It instructs financial institutions that ''information provided by any loan applicant pursuant to a request under subsection (b) . . . shall be itemized in order to clearly and conspicuously disclose'' data including the loan type and purpose, the amount of credit applied for and approved, and gross annual revenue, among others. In other words, 704B(e) designates all of the information that financial institutions are required to compile and maintain—not simply an applicant's status as a women-owned, minority-owned, or small business—as information provided by an applicant ''pursuant to a request under subsection (b).'' But information deemed provided pursuant to 704B(b) is subject not only to the firewall under 704B(d) but also to a right to refuse under 704B(c) and separate recordkeeping requirements under 704B(b)(2). Applying these special protections to many of the data points in 704B(e), such as an applicant's gross annual revenue or the amount applied for, would be extremely difficult to implement because this information is critical to financial institutions' ordinary operations in making credit decisions.

In order to resolve these ambiguities, the Bureau believes that the best reading of the statute is to give different meanings to the phrase ''any information provided by the applicant pursuant to a request under subsection (b)'' with respect to ECOA section 704B(e) as opposed to 704B(b)(2), (c), and (d). As relevant here, with respect to the firewall in ECOA section 704B(d), the Bureau interprets the phrase to refer to the data points in proposed § 1002.107(a)(18) (minority-owned business status) and proposed § 1002.107(a)(19) (women-owned business status), as well as proposed § 1002.107(a)(20) (ethnicity, race, and sex of principal owners). Each of these data points require financial institutions to request demographic information that has no bearing on the creditworthiness of the applicant. Moreover, a financial institution could not inquire about this demographic information absent section 1071's mandate to collect and report the information, and ECOA prohibits a financial institution from discriminating against an applicant on the basis of the information. The Bureau accordingly believes that the best effectuation of congressional intent is to apply section 1071's special-protection provisions to apply to this demographic information, regardless of whether the statutory authority to collect it originates in 704B(b)(1) (women-owned business status and minority-owned business status) or 704B(e)(2)(G) (race, sex, and ethnicity of principal owners). The Bureau similarly believes that Congress did not intend these special protections to apply to any of the other data points proposed in § 1002.107(a), which the financial institution is permitted to request regardless of coverage under section 1071, which are not the subject of Federal antidiscrimination law, and many of which financial institutions currently use for underwriting purposes.[705]

The Bureau is proposing § 1002.108 to implement ECOA section 704B(d) and, pursuant to its authority in 704B(g)(1), to prescribe such rules and issue such guidance as may be necessary to carry out, enforce, and compile data pursuant to section 1071.

SBREFA Proposal Under Consideration and Feedback

*Information subject to the firewall.* In the SBREFA Outline, the Bureau stated that it was considering proposing that financial institutions need only limit access under ECOA section 704B(d) to an applicant's responses to the financial institution's specific inquiries regarding women-owned and minority-owned business status and the ethnicity, race, and sex of principal owners, but not to an applicant's small business status.[706] As discussed below, many SERs and other commenters suggested that restricting access to protected demographic information obtained to comply with section 1071 (*i.e.,* minority-owned business status, women-owned business status, and the principal owners' ethnicity, race, and sex) would be difficult for their institutions. Although these SERs and other commenters generally did not comment on the scope of information that the Bureau considered proposing be subject to the firewall (other than to say

[705] As explained in the *Overview* to this part V, the Bureau is not proposing to require financial institutions to maintain and report a data point on small business status.

[706] SBREFA Outline at 36–37.

that liming access would be difficult), one commenter said that small business status should not be subject to the firewall and another commenter said that it should.

The SBREFA Panel recommended that the Bureau propose clear guidance on what information is subject to the firewall requirement.[707]

*Feasibility of maintaining a firewall.* In the SBREFA Outline, the Bureau also stated that it was considering how it might apply the feasibility standard in ECOA section 704B(d)(1) and asked several questions related to this standard.[708] Several SERs that take in-person or paper applications or that have very limited commercial lending staff stated that it would be costly or impossible for them to restrict access to applicants' protected demographic information by underwriters and other persons involved in making determinations concerning applications from small businesses.[709] In contrast, several SERs that operate entirely online said that it would be relatively easy for them to restrict access to applicants' protected demographic information. Another SER said that it could restrict access to protected demographic information for applications received online (though not for paper applications), but that it would necessitate an overhaul of its online system.

Many other stakeholders providing feedback on the SBREFA Outline said that it would not be possible to limit access to applicants' protected demographic information or that attempting to do so would be costly and time consuming. Some other commenters suggested that implementing and maintaining a firewall would be impossible for all financial institutions or certain categories of financial institutions (*i.e.,* smaller financial institutions, community banks, credit unions). Generally, these commenters requested exemptions from the firewall requirement for either all financial institutions or specific categories of financial institutions. Generally, commenters were concerned about the costs associated with hiring additional staff, outsourcing additional functions, or making system changes to implement and maintain the firewall. However, some commenters indicated that financial institutions should not be required to change their existing application or other processes to maintain a firewall and noted that underwriters and officers who gather information from small business applicants also make determinations regarding such applications. Commenters noted that implementing a firewall would necessitate more points of contact between employees of the financial institution and an applicant and would require financial institutions to reassign job duties and retrain existing employees.

Importantly, many comments from SERs and others seemed to reflect confusion about the intended scope of the firewall. For example, some SERs and other commenters seemed to think that the firewall would prohibit employees who were generally aware of an applicant's business status or of a principal owner's ethnicity, race, and sex, such as due to participation in outside organizations or activities, from making any determinations regarding applications. One commenter remarked that it would be impossible to comply with the firewall requirement if a financial institution required a principal owner to provide a driver's license. Additionally, some SERs and other commenters requested guidance on the scope and applicability of the firewall, indicating that the SBREFA Outline was not sufficiently clear regarding the firewall's scope.

The SBREFA Panel recommended that the Bureau propose a clear feasibility standard that takes into account the costs of establishing and maintaining a firewall to limit access by underwriters and other persons.[710]

*Providing a notice in lieu of the firewall.* In the SBREFA Outline, the Bureau also stated that it was considering proposing to interpret ECOA section 704B(d)(2) to permit financial institutions to give underwriters, employees, and officers access to applicants' responses regarding women-owned business status, minority-owned business status and the principal owners' race, sex, and ethnicity when the financial institution determines that such access is needed for the underwriter, employee, or officer to perform usual and regularly assigned job duties.[711] In such circumstances, the financial institution would need to comply with the statutory requirement to provide a notice in lieu of limiting access. The Bureau also stated in the SBREFA Outline that the financial institution could provide the notice to all small business applicants or the specific applicant or applicants whose information will or may be accessed. The Bureau also stated that it was considering developing sample disclosure language that financial institutions could use when providing the notice under 704B(d)(2) and that the notice under 704B(d)(2) need not include language regarding small business status.

SERs and other stakeholders generally were supportive of providing a notice to applicants in lieu of restricting access to applicants' protected demographic information obtained for purposes of the 1071 rule. Several stated that it should be permissible to provide a disclosure or notice to meet the firewall requirement, and others stated that a financial institution should be permitted to provide a notice to meet the firewall requirement if the financial institution itself determines that establishing and maintaining a firewall was not feasible. However, one industry commenter stated that financial institutions should not be required to provide a notice to comply with the firewall requirement, and one SER said that use of the notice should be optional. This SER suggested that requiring the use of a notice may cause confusion for the applicant and have the unintended consequence of causing unfounded claims of discrimination if the application is denied. One SER cautioned that many people do not read notices and disclosures, and another SER suggested that financial institutions would not want to provide a notice because the loan process already involves too much paperwork.

Several SERs and several other stakeholders indicated a preference for providing a notice to all applicants, not just those specific applicants whose protected demographic information was likely to be accessed by underwriters and others making decisions regarding applications.

Several stakeholders supported a model notice. One SER as well as two other commenters asked that, if the Bureau provided sample language or a model notice, that the Bureau provide it in English as well as in other languages, such as Spanish. SERs and other stakeholders suggested a variety of statements that they thought should or should not be included in sample language or a model notice. They also provided a variety of suggestions on combining the notice with other documents, such as the application, sample data collection form, or with other required notices and disclosures.

One SER requested that the Bureau clarify when a financial institution would be permitted to provide a notice in lieu of restricting access to

[707] SBREFA Panel Report at 47.

[708] SBREFA Outline at 36–37.

[709] The SER feedback discussed in this section-by-section analysis can be found in the SBREFA Panel Report at 33–34.

[710] *Id.* at 47.

[711] SBREFA Outline at 36–37.

applicants' protected demographic information. Some stakeholders requested additional guidance on the timing and methods for providing a notice.

The SBREFA Panel recommended that the Bureau propose to permit financial institutions to provide a notice to applicants instead of restricting access to applicants' protected demographic information if it is not feasible for the financial institution to restrict such access.[712]

Proposed Rule

The Bureau is proposing § 1002.108 to implement the firewall provisions in ECOA section 704B(d). Proposed § 1002.108(a) would provide certain relevant definitions, proposed § 1002.108(b) would state the general prohibition on access to applicants' protected demographic information by certain persons, proposed § 1002.108(c) would explain the exception to that prohibition, and proposed § 1002.108(d) would provide language for the notice necessary in order to qualify for the exception. The Bureau is also proposing commentary. The Bureau's proposed approach to § 1002.108 is consistent with its approach under consideration during the SBREFA process. The Bureau's general rationale for how it reads the firewall provisions are set forth in this section-by-section analysis of proposed § 1002.108 above, under *Background.*

Proposed § 1002.108(b) would state that, unless the exception under proposed § 1002.108(c) applies, an employee or officer of a covered financial institution or a covered financial institution's affiliate shall not have access to an applicant's responses to inquiries that the financial institution makes pursuant to this subpart regarding whether the applicant is a minority-owned business under proposed § 1002.107(a)(18) or a women-owned business under proposed § 1002.107(a)(19), and regarding the ethnicity, race, and sex of the applicant's principal owners under proposed § 1002.107(20), if that employee or officer is involved in making any determination concerning that applicant's covered application.

Consistent with the SBREFA Panel's recommendation, proposed comment 108(b)–1 would clarify the information that is subject to the prohibition on access (*i.e.,* the firewall) and provide examples. First, proposed comment 108(b)–1 would clarify that the prohibition in proposed § 1002.108(b) would apply only to an applicant's responses to the inquiries that the covered financial institution makes to satisfy § 1002.107(a)(18) through (20) and provide examples. Second, proposed comment 108(b)–1 would clarify that the prohibition in proposed § 1002.108(b) does not apply to ethnicity or race information about principal owners that the financial institution collects via visual observation or surname, or to an applicant's responses to inquiries regarding minority-owned or women-owned business status, or principal owners' ethnicity, race, or sex, made for other purposes and provide an example. It would also clarify that the prohibition does not apply if an employee or officer generally knows that an applicant is a minority-owned business or women-owned business, or knows the ethnicity, race, or sex of any of the applicant's principal owners due to activities unrelated to the inquiries made to satisfy the financial institution's obligations under subpart B, as well as provide an example.

In response to SBREFA feedback requesting additional clarification and guidance on who would be subject to the firewall, proposed comment 108(b)–2 would clarify the scope of persons subject to the prohibition and provide examples.

Additionally, the Bureau is proposing to define the phrase ''involved in making any determination concerning a covered application.'' Proposed § 1002.108(a)(1) would define this phrase to mean participating in a decision regarding the evaluation of a covered application, including the creditworthiness of an applicant for a covered credit transaction. Thus, an employee or officer who participates in such decision would be subject to the prohibition in proposed § 1002.108(b), and thus could not have access to an applicant's responses to the covered financial institution's inquiries under proposed § 1002.107(a)(18) through (20) with regard to that covered application, unless the exception in proposed § 1002.108(c) applies.

Proposed comment 108(a)–1 would provide additional clarification regarding when an employee or officer is ''involved in making any determination concerning a covered application.'' In particular, it would clarify that an employee or officer is involved in making a determination concerning a covered application if the employee or officer makes, or otherwise participates in, a decision regarding the evaluation of a covered application or the creditworthiness of an applicant for a covered credit transaction. Proposed comment 108(a)–1 would note that this group of employees and officers includes, but is not limited to, employees and officers who serve as underwriters.[713] Additionally, it would explain that the decision that the employee or officer makes or participates in must be about a specific covered application. An employee or officer would not be involved in making a determination concerning a covered application if the employee or officer is involved in making a decision that affects covered applications generally, the employee or officer interacts with small businesses prior to them becoming applicants or submitting a covered application, or the employee or officer makes or participates in a decision after the financial institution has taken final action on the application, such as decisions about servicing or collecting a covered credit transaction.

Consistent with the SBREFA Panel's recommendation, proposed § 1002.108(c) would state that the prohibition in proposed § 1002.108(b) shall not apply to an employee or officer if a financial institution determines that it is not feasible to limit that employee's or officer's access to one or more of an applicant's responses to the financial institution's inquiries under § 1002.107(a)(18) through (20) and the financial institution provides the notice required under proposed § 1002.108(d) to the applicant. Proposed § 1002.108(c) would further state that it is not feasible to limit access as required pursuant to proposed § 1002.108(b) if the financial institution determines that an employee or officer involved in making any determination concerning a covered application should have access to one or more applicants' responses to the financial institution's inquiries under proposed § 1002.107(a)(18) through (20).

Proposed comment 108(c)–1 would clarify that a financial institution is not required to limit the access of a particular employee or officer who is involved in making determinations concerning covered applications if the financial institution determines that the particular employee or officer should have access to the information collected

[712] SBREFA Panel Report at 47.

[713] While ECOA section 704B(d) refers to underwriters and other officers and employees of a financial institution, or any affiliate of a financial institution, who are involved in making any determination concerning an application, the Bureau has clarified that underwriters are one classification or category of employees and officers who are involved in making a determination concerning an application. The Bureau has not separately listed underwriters as subject to the firewall because doing so is unnecessary given their inclusion in the larger group of employees and officers who are involved in making any determination concerning an application.

pursuant to proposed § 1002.107(a)(18) through (20) and the financial institution provides the notice required by proposed § 1002.108(d). It would explain that a financial institution can determine that several employees and officers should have access or that all of a group of similarly situated employees or officers should have access, but that a financial institution cannot permit all employees and officers to have access simply because it has determined that one or more employees or officers should have access. It would also provide an example.

Proposed § 1002.108(a)(2) would define the phrase ''should have access'' to mean that an employee or officer may need to collect, see, consider, refer to, or otherwise use the information to perform that employee's or officer's assigned job duties. Proposed comment 108(a)–2 would explain that a financial institution may determine that an employee or officer should have access for purposes of proposed § 1002.108 if that employee or officer is assigned one or more job duties that may require the employee or officer to collect (based on visual observation, surname, or otherwise), see, consider, refer to, or use information otherwise subject to the prohibition in proposed § 1002.108(b). The employee or officer would not have to be required to collect, see, consider, refer to or use such information or to actually collect, see, consider, refer to or use such information. It would be sufficient if the employee or officer might need to do so to perform the employee's or officer's assigned job duties. This approach is similar to the approach under consideration during the SBREFA process, though in response to feedback received, the proposed definition would not require that the assigned job duties be usually or regularly assigned. Thus, an employee or officer would not be subject to the prohibition if the financial institution determines that the employee or officer might need to see, consider, refer to, or otherwise use the information an applicant provided pursuant to proposed § 1002.17(a)(18) through (20) to perform the employee's or officer's assigned job duties, and the financial institution provides the required notice to the applicant. Proposed comment 108(a)–2 would include an example of when a financial institution would be able to determine that an officer should have access and would state that, if a financial institution determines that an employee or officer who is involved in making any determination concerning a covered application should have access for purposes of § 1002.108, the financial institution is responsible for ensuring that the employee or officer only accesses and uses the protected information for lawful purposes. Additionally, proposed comment 108(a)–2 would explain that a financial institution may determine that all employees or officers with the same job description or assigned duties should have access for purposes of § 1002.108 and provide an example.

Proposed § 1002.108(d) would describe the notice that a financial institution is required to provide to satisfy the exception in proposed § 1002.108(c). Proposed § 1002.108(d) would state that, in order to satisfy the exception set forth in proposed § 1002.108(c), a financial institution shall provide a notice to each applicant whose responses will be accessed, informing the applicant that one or more employees or officers involved in making determinations concerning the covered application may have access to the applicant's responses to the financial institution's inquiries regarding whether the applicant is a minority-owned business or a women-owned business, and regarding the ethnicity, race, and sex of the applicant's principal owners. Proposed § 1002.108(d) would also state that the financial institution shall provide this notice when making the inquiries required under § 1002.107(a)(18) through (20) and together with the notices required pursuant to § 1002.107(a)(18) through (20).

Proposed comment 108(d)–1 would explain that if a financial institution determines that one or more employees or officers should have access pursuant to proposed § 1002.108(c), then the financial institution must provide the required notice to, at a minimum, the applicant or applicants whose responses will be accessed by an employee or officer involved in making determinations regarding the applicant's or applicants' covered applications. It would also clarify that, as an alternative, the financial institution could provide the required notice to a larger group of applicants, including all applicants, if it determines that one or more officers or employees should have access.

Proposed comment 108(d)–2 would describe the content of the required notice. It would state that the notice must inform the applicant that one or more employees and officers involved in making determinations regarding the applicant's covered application may have access to the applicant's responses regarding the applicant's minority-owned business status, its women-owned business status, and its principal owners' ethnicity, race, and sex. Proposed comment 108(d)–2 would note that the financial institution may, but is not required to, provide the notice on its data collection form. Additionally, proposed comment 108(d)–2 would include language for the required notice. A financial institution would be required to use the language set forth in proposed comment 108(d)–2 or substantially similar language when providing the notice.

Comment 108(d)–3 would explain that if a financial institution is providing the notice required by proposed § 1002.108(d) orally, it must provide the notice prior to asking the applicant if it is a minority-owned business or women-owned business and prior to asking for a principal owner's ethnicity, race, or sex. It would further explain that, if the notice required by proposed § 1002.108(d) is provided on the same paper or electronic data collection form as the inquiries about minority-owned business status, women-owned business status, and the principal owners' ethnicity, race, or sex, the financial institution would be required to provide the notice at the top of the form. If the notice required by proposed § 1002.108(d) is provided in an electronic or paper document that is separate from the data collection form, the financial institution would be required to provide the notice at the same time as the data collection form or prior to providing the data collection form. Additionally, proposed comment 108(d)–3 would clarify that the notice required pursuant to proposed § 1002.108(d) must be provided with the non-discrimination notices required pursuant to proposed § 1002.107(a)(18) through (20) and would reference proposed appendix E for an example.

The Bureau believes that its proposed approach reflects the feedback from most SERs and commenters who preferred to be able to give a notice and did not want to hire additional staff or change processes. While some commenters did not want to provide a notice, section 1071 requires that a financial institution provide a specific notice to an applicant if the financial institution determines that an employee or officer should have access to information otherwise subject to the firewall requirement. As an alternative to providing a notice, a financial institution could take the steps necessary to establish and maintain a firewall.

The Bureau seeks comment on its proposed approach to the firewall requirement and whether a different approach might result in a better policy outcome. The Bureau also seeks

comment on the scope of the proposed firewall and the exception. The Bureau specifically seeks comment on whether the firewall should apply to information about principal owners' ethnicity and race that is obtained via visual observation and/or surname. Finally, the Bureau generally requests comment on whether additional clarification is needed regarding the firewall requirement.

Section 1002.109 Reporting of Data to the Bureau

Proposed § 1002.109 would address several aspects of financial institutions' obligations to report 1071 data to the Bureau. First, proposed § 1002.109(a) would require 1071 data to be collected on a calendar year basis and reported to the Bureau by June 1 of the following year, and would address several related issues. Second, proposed § 1002.109(b) would detail the information that financial institutions must provide about themselves when reporting 1071 data to the Bureau. Finally, proposed § 1002.109(c) would address technical instructions for submitting data to the Bureau.

The Bureau is proposing § 1002.109 to implement ECOA section 704B(f)(1) and pursuant to its authority under 704B(g)(1) to prescribe such rules and issue such guidance as may be necessary to carry out, enforce, and compile data pursuant to section 1071. The Bureau is also proposing § 1002.109(b) pursuant to 704B(e)(2)(H), which requires financial institutions to compile and maintain as part of their 1071 data any additional data that the Bureau determines would aid in fulfilling the purposes of section 1071.

109(a) Reporting to the Bureau

109(a)(1) Annual Reporting

Background

ECOA section 704B(f)(1) provides that ''[t]he data required to be compiled and maintained under [section 1071] by any financial institution shall be submitted annually to the Bureau.''

SBREFA Proposal Under Consideration and Feedback Received

In the SBREFA Outline, the Bureau stated it was considering proposing that financial institutions collect 1071 data on a calendar year basis, and that financial institutions report 1071 data to the Bureau by a specified time after the end of each calendar year.[714]

SERs and other stakeholders responded to various aspects of the Bureau's proposals under consideration in the SBREFA Outline on reporting 1071 data to the Bureau, including reporting frequency, reporting period, and submission date.[715]

Regarding reporting frequency, stakeholder comments were split. One SER suggested that data reporting be done on a calendar year basis, to avoid half-year measurements. Some other stakeholders—including several industry and trade association stakeholders, and a community group—also supported reporting no more or less frequently than once a year. Other stakeholders supported reporting on a more frequent basis than annually. In that latter group, another SER requested ongoing data reporting, arguing that more frequent reporting is less burdensome by permitting financial institutions to submit data as applications are received or loans are made. Three stakeholders (a community group, a think tank, and a community development lender trade association) also supported reporting more frequently than annually, especially for larger financial institutions, arguing that technology enables near real-time reporting.

Regarding the reporting period and submission date, several trade associations supported collecting data on a calendar year basis. A community group suggested an alternative to calendar-year reporting, specifically a one-year collection period starting on July 1 and ending on June 30 the next year. The group argued that this alternative schedule would help financial institutions avoid overlapping obligations with the calendar year data collection schedule for HMDA. A SER cautioned against aligning the annual reporting dates for section 1071 with the reporting dates for HMDA, noting that reporting for both regimes at the same time could strain resources; other stakeholders echoed this view. Other stakeholders requested that the Bureau coordinate reporting dates with other Federal agencies, including those responsible for collecting data from CDFI Fund participants and banks subject to CRA reporting.

Regarding reporting 1071 data to the Bureau, several SERs noted that they already report much of the data that a 1071 rule would seem likely to require to the Treasury Department's CDFI Fund. One SER requested that the Bureau coordinate with the CDFI Fund on consistency of definitions, types of data collection, and timing of reporting, and that the agencies should consider streamlining reporting requirements through data sharing.

The SBREFA Panel recommended, regarding this issue as well as other recordkeeping and reporting issues addressed in the SBREFA Outline, that the Bureau seek comment on these aspects of a 1071 rule, and how best to implement them in a manner that minimizes cost and burden to small financial institutions.[716]

Proposed Rule

The Bureau is proposing, in § 1002.109(a)(1)(i), to require that by June 1 following the calendar year for which data are collected and maintained as required by proposed § 1002.107, a covered financial institution shall submit its small business lending application register in the format prescribed by the Bureau. This approach to reporting frequency and reporting period is consistent with both the annual submission schedule specified in the statute as well as with the approach under consideration at SBREFA.

Regarding reporting frequency, while several stakeholders and one SER advocated for more frequent reporting (especially via application programming interface (API)), annual reporting is consistent with what ECOA section 704B(f)(1) provides and with HMDA for most filers.[717] The Bureau is concerned that requiring more frequent reporting for 1071 data could be unduly onerous for financial institutions, especially small financial institutions and those with lower application volumes.

Further, the Bureau is not proposing that financial institutions (small or otherwise) be permitted to submit their 1071 data on a real-time basis. The Bureau believes that this would add complexity to the Bureau reporting system. The Bureau is concerned that this approach could result in financial institutions treating the Bureau as their official recordkeeping system for their 1071 data. Financial institutions that were required to update or correct their data as a result of an audit, examination, or compliance review would need to make such changes within the Bureau's system, requiring the Bureau to develop an infrastructure that not only accepts real-time submissions, but also real-time corrections to prior real-time submissions. Nonetheless, the Bureau is continuing to explore ways it might facilitate or streamline reporting, particularly for small financial

[714] SBREFA Outline at 39–40.

[715] The SER feedback in this section-by-section analysis can be found in the SBREFA Panel Report at 34.

[716] *Id.* at 47.

[717] Some financial institutions with over 60,000 covered loans and applications must file HMDA data on a quarterly basis. 12 CFR 1003.5(a)(ii).

institutions. See the section-by-section analysis of proposed § 1002.109(c) below for additional information.

Regarding the reporting period, the Bureau believes there are advantages to having data collected and reported on a calendar year basis. Calendar year reporting may facilitate other aspects of the rule that depend on data that is typically recorded on a calendar year basis. For instance, other parts of the rule look to annual data, such as proposed § 1002.105(b), which would use a financial institution's loan volumes over the prior two calendar years to determine coverage. Further, the Bureau understands that financial institutions would generally prefer to have such data collections occur on a calendar year basis because such an approach would be generally consistent with their operations. The Bureau is concerned that requiring an annual reporting period other than the calendar year—such as July 1 to June 30—could result in additional challenges for financial institutions in complying with the rule, which could in turn make errors in collecting and reporting data to the Bureau more likely.

As discussed in more detail below in the section-by-section analysis of proposed § 1002.114(b) below, the Bureau is considering whether to require or permit the initial collection of data under the eventual 1071 rule to begin, following an appropriate implementation period, at some point during the year rather than on January 1. For example, if the compliance date were on July 1, 2024, the Bureau would permit or require all financial institutions to collect and report data pursuant to proposed § 1002.109(a) for the period July 1 to December 31, 2024. After this initial partial collection year, financial institutions would collect data on a calendar year basis.

Regarding the proposed submission date, several stakeholders (including community groups) requested a March 1 submission deadline on the grounds that financial institutions comply with a March 1 deadline for HMDA despite its relative complexity compared to 1071. The Bureau is proposing a June 1 submission deadline to give additional time for the compliance staff of financial institutions to dedicate time and resources focused on preparing a small business lending application register, after meeting other reporting obligations with earlier deadlines, such as under HMDA or CRA. This may be especially important for smaller financial institutions that will rely on the same staff to comply with other data reporting regimes and this 1071 rule.

Proposed § 1002.109(a)(1)(ii) would require that an authorized representative of the covered financial institution with knowledge of the data submitted certify to the accuracy and completeness of data submitted pursuant to proposed § 1005.109(a). A similar provision exists in Regulation C (§ 1003.5(a)(i)), and the Bureau believes it would be appropriate to adopt it here as well. Based on the Bureau's experience with HMDA and Regulation C, the Bureau believes that having a specific person responsible for certifying to the accuracy and completeness of data is likely to lead to financial institutions providing better quality data.

Proposed § 1002.109(a)(1)(iii) would clarify that when the last day for submission of data prescribed under proposed § 1002.109(a)(1) falls on a date that is not a business day, a submission is considered timely if it is submitted no later than the next business day.

The Bureau seeks comment on its proposed approach to the aspects of reporting addressed in proposed § 1002.109(a), including that the reporting frequency be annual, that the reporting period be the calendar year, and that the submission date be June 1 of the next calendar year. In particular, the Bureau seeks comment with respect to proposed § 1002.109(a)(1)(i) on whether requiring the submission of small business lending application registers by June 1 might give rise to complications for any persons or entities relying on data from the registers for other purposes, such as Federal regulators scheduling examinations.

109(a)(2) Reporting by Subsidiaries

ECOA section 704B(f)(1) states that ''any'' financial institution obligated to report 1071 data to the Bureau must do so annually; the statute does not expressly address financial institutions that are themselves subsidiaries of other financial institutions. In the SBREFA Outline, the Bureau did not address this issue for section 1071 reporting.

Proposed § 1002.109(a)(2) would state that a covered financial institution that is a subsidiary of another covered financial institution shall complete a separate small business lending application register. The subsidiary shall submit its small business lending application register, directly or through its parent, to the Bureau. Proposed comment 109(a)(2)–1 would explain that a covered financial institution is considered a subsidiary of another covered financial institution for purposes of reporting data pursuant to proposed § 1002.109 if more than 50 percent of the ownership or control of the first covered financial institution is held by the second covered financial institution. This proposed provision mirrors one that exists for HMDA reporting under Regulation C in § 1003.5(a)(2). The Bureau believes that this proposed provision would help facilitate compliance with the 1071 rule by permitting parent financial institutions to coordinate the reporting of all their subsidiaries' small business lending data together.

The Bureau seeks comment on this aspect of its proposal. Additionally, the Bureau seeks comment on proposed § 1002.109(a)(2) in light of proposed § 1002.105(b), which would define a covered financial institution as a financial institution that originated at least 25 covered credit transactions for small businesses in each of the two preceding calendar years. The Bureau seeks comment on whether this provision may risk creating ambiguity with respect to compliance and whether additional safeguards may be required to dissuade financial institutions from creating subsidiaries for the sole purpose of avoiding the collection and reporting or section 1071 data. The Bureau also seeks comment on all other aspects of this proposal.

109(a)(3) Reporting Obligations Where Multiple Financial Institutions Are Involved in a Covered Credit Transaction

Section 1071's requirement to collect and report data for any ''application to a financial institution for credit'' could be read as applying to more than one financial institution when an intermediary provides the application to another institution that takes final action on the application. It might also apply in cases where one application is simultaneously sent to multiple financial institutions. This broad reading may serve a useful function, such as comprehensive reporting by all financial institutions involved in a small business lending transaction, but could also generate duplicative compliance costs for financial institutions and potentially detract from the quality of reported 1071 data, increasing the risk that certain applications are reported multiple times.

At SBREFA, in considering ECOA section 704B(f)(1), the Bureau stated that it was considering proposing that in the situation where more than one party is involved on the lender side of a single small business loan or application, section 1071's data collection and reporting requirements would be limited in the same manner as in

Regulation C. For HMDA, Regulation C provides (in § 1003.4(a) and comment 4(a)–3) that if more than one financial institution was involved in the origination of a covered loan, the financial institution that made the final credit decision approving the application before closing or account opening shall report the covered loan as an origination. If there was an origination, then the financial institution making the final credit decision approving the application would be responsible for reporting (even if the financial institution used credit standards set by another party). If more than one financial institution approved a loan, and the loan was purchased after closing by one of the financial institutions approving the loan, the purchaser (such as an assignee) would report the loan. If there was no origination and multiple financial institutions received the same application, then any financial institution that made a credit decision would be responsible for reporting (even if other financial institution also reported on the same potential non-originated application).

Several SERs voiced support for aligning reporting requirements for financial institutions that are not the lender of record with the approach taken for HMDA reporting in the Bureau's Regulation C. One SER stressed that imposing section 1071 requirements for loan buyers, who play an important role in assisting CDFIs but do not make credit decisions, might risk their continued participation. Another CDFI SER explained that the institution occasionally participates in pooled loan purchases and recommended that the Bureau ensure that reporting obligations for such pooled loans are clear.[718] Other SERs expressed concern in adopting the Bureau's approach in Regulation C, noting the differences between small business and residential loan products, and advocated for simpler approaches. The SBREFA Panel did not provide a relevant recommendation.

Comments from other stakeholders included several voicing support for a HMDA-like approach, praising the Bureau's consistent approach and interest in limiting duplicative information. However, several comments advocated against the HMDA approach, generally by proffering other ideas rather than criticizing the rules or outcomes of the HMDA approach. Alternative suggestions varied, but included suggesting that data collection and reporting should be required only for the company most closely interacting with the loan applicant; if a financial institution receives a covered application, then the application should be subject to reporting, regardless of outcome; the financial institution that funded (or would have funded) the loan should be required to collect and report; and the financial institution that conducts the underwriting and determines whether the small business credit applicant qualifies for credit using its underwriting criteria should be required to report and collect.

Proposed § 1002.109(a)(3) would provide that only one covered financial institution shall report each covered credit transaction as an origination, and that if more than one financial institution was involved in an origination, the financial institution that made the final credit decision approving the application shall report the loan as an origination, if the financial institution is a covered financial institution.

Proposed § 1002.109(a)(3) would further provide that if there was no origination, then any covered financial institution that made a credit decision shall report the application. The Bureau is aware that under certain lending models as they operate today, financial institutions may not always be aware of whether another financial institution originated a credit transaction. The Bureau believes that information on whether there was an origination should generally be available, or that lending models can be adjusted to provide this information at low cost. For example, if an applicant applies to Financial Institutions A and B, and then withdraws an application with Financial Institution A, then Financial Institution A should be able to ascertain whether the applicant obtained credit from Financial Institution B.

Proposed comment 109(a)(3)–1 would provide general guidance on how to report originations and applications involving more than one institution. In short, if more than one financial institution was involved in the origination of a covered credit transaction, the financial institution that made the final credit decision approving the application shall report the covered credit transaction as an origination. Proposed comment 109(a)(3)–2 would offer examples illustrating how a financial institution should report a particular application or originated covered credit transaction. Proposed comment 109(a)(3)–3 would explain that if a covered financial institution made a credit decision on a covered application through the actions of an agent, the financial institution reports the application, and provides an example. State law determines whether one party is the agent of another. While these proposed comments assume that all of the parties are covered financial institutions, the same principles and examples would apply if any of the parties is not a covered financial institution.

The Bureau seeks comment on this aspect of its proposal. In particular, the Bureau seeks comment with respect to proposed § 1002.109(a)(3) on whether, particularly in the case of applications that a financial institution is treating as withdrawn or denied, the financial institution can ascertain if a covered credit transaction was originated by another financial institution without logistical difficulty or significant compliance cost.

109(b) Financial Institution Identifying Information

Beginning in 1989, Regulation C required financial institutions reporting HMDA data to use a discrete transmittal sheet to provide information on themselves separate from the loan/application registers used to submit HMDA data.[719] The 2015 HMDA final rule replaced the transmittal sheet requirement with Regulation C § 1003.5(a)(3), which requires that a financial institution reporting HMDA data to provide with its submission (i) its name; (ii) the calendar year the data submission covers; (iii) the name and contact information of a person who may be contacted with questions about the institution's submission; (iv) its appropriate Federal agency; (v) the total number of entries contained in the submission; (vi) its Federal Taxpayer Identification Number; and (vii) its Legal Entity Identifier (LEI).[720] The Bureau and FFIEC publish information on financial institutions that report HMDA data in the HMDA Reporter Panel, which includes the required submission information, provided by financial institutions under § 1003.5(a)(3), as well as other data derived from this information.[721]

The Bureau is proposing to collect information regarding financial institutions that report 1071 data, similar to the information required

[718] See the section-by-section analysis of proposed § 1002.104(b) above for further discussion of the proposed treatment of pooled loans.

[719] *See* 54 FR 51356, 51361 (Dec. 15, 1989) (requiring financial institutions to use the transmittal sheet and loan/application register in appendix A).

[720] 80 FR 66128, 66526 (Oct. 28, 2015) (deleting appendix A and relocating its substantive requirements to § 1003.5(a)(3)).

[721] *See* Fed. Fin. Insts. Examination Council, *HMDA Reporter Panel, https://www.ffiec.gov/hmdarawdata/FORMATS/HMDAReporterPanel.pdf* (last visited July 27, 2021).

under Regulation C. Specifically, proposed § 1002.109(b) would require that a financial institution provide the following information about itself as part of its submission: (1) Its name; (2) its headquarters address; (3) the name and business contact information of a person who may be contacted with questions about the financial institution's submission; (4) its Federal prudential regulator, if applicable; (5) its Federal Taxpayer Identification Number; (6) its LEI; (7) its Research, Statistics, Supervision, and Discount identification (RSSD ID) number, if applicable; (8) its parent institution information, if applicable (including the name, LEI, and RSSD ID number of its immediate parent entity and top-holding parent entity, if applicable); (9) the type of financial institution, chosen from a list provided; and (10) whether the financial institution is voluntarily reporting 1071 data.

As discussed below, the Bureau believes it would be appropriate to require each of these pieces of information regarding financial institutions reporting 1071 data. As a practical matter, the Bureau expects that this information might be provided by a financial institution when it initially sets up an account with the Bureau's 1071 data submission platform to allow it to file 1071 data as required by the rule. Thus, this information might exist in the Bureau's 1071 data submission system and be updated by the financial institution as needed.

As described in detail below, the Bureau believes that detailed information on the financial institutions reporting 1071 data is necessary to carry out, enforce, and compile data under section 1071, pursuant to ECOA section 704B(f)(1) and (g)(1), and would aid in fulfilling the purposes of section 1071, pursuant to 704B(e)(2)(H). To analyze 1071 data, the Bureau and other potential users of the data would need information on the financial institutions that are taking covered applications and making covered credit transactions. Fair lending analysis is based on a review of the decisions financial institutions make on applications. Similarly, an analysis of the business and community development needs of a given community is based on understanding the volume and geography of the lending activities of specific financial institutions.

With the possible exception of the LEI (in proposed § 1002.109(b)(6) and (8)(ii) and (v)) in certain circumstances, the Bureau believes that financial institutions already have all the information that would be required of them under proposed § 1002.109(b), and that being required to provide this information to the Bureau should not pose any particular difficulties or costs on financial institutions.

The Bureau seeks comment on its approach to collecting information on financial institutions, including each of the items listed in proposed § 1002.109(b)(1) through (10) as well as whether the Bureau should require the reporting of any other information on financial institutions. Additional requests for comment specific to certain pieces of information are included below.

Paragraph 109(b)(1)

During the SBREFA process, in the context of discussing privacy, some stakeholders expressed an aversion to the collection and publication of information on financial institutions. Some stakeholders, including SERs and some larger entities, commented that the Bureau should not publish the names of financial institutions reporting 1071 data, asserting that those financial institutions would face reputational risks. Some stakeholders even appeared to suggest that the Bureau not collect the names of financial institutions at all.

Proposed § 1002.109(b)(1) would require a financial institution to provide its name. Regulation C (§ 1003.5(a)(2)(i)) requires financial institutions to provide their names on their transmittal sheets when filing HMDA data, and the Bureau believes that a similar requirement would be appropriate here.

The Bureau believes that collecting a financial institution's name (as well as all the other identifying information in proposed § 1002.109(b)) is necessary to carry out, enforce, and compile data under section 1071, and would aid in fulfilling the purposes of section 1071. For both of section 1071's statutory purposes, the identity of the financial institution taking covered applications and originating covered credit transactions is critical. Without knowing the financial institution's name, fair lending enforcement would not be possible. Analyzing business and community development needs is much improved when it is possible to identify which financial institutions are operating in specific geographic areas.

There are additional practical considerations. Examinations for compliance with section 1071 would be difficult, if not impossible, without the name of the financial institution associated with a specific small business lending application register. Further, it would be difficult for the Bureau to administer a website for 1071 data submissions without creating logins assigned to specific financial institutions. Finally, the Bureau is proposing in § 1002.110(c) that financial institutions' statutory obligation to make 1071 data available to any member of the public, upon request, pursuant to ECOA section 704B(f)(2)(B) would be satisfied by the institutions' directing the public to the Bureau's website for this information. Without the financial institution's name (and other relevant identifying information), proposed § 1002.110(c) would not satisfy this statutory requirement.

Paragraph 109(b)(2)

Proposed § 1002.109(b)(2) would require a financial institution to provide the physical address of its headquarters location. The headquarters address of a financial institution would provide geographic information that would aid in fulfilling the statutory purposes of section 1071, including, for instance, analyses of the connection between a financial institution's location and the business and community development needs where it operates. It will also help identify and differentiate financial institutions, particularly nondepository financial institutions, that have similar names.

Paragraph 109(b)(3)

Proposed § 1002.109(b)(3) would require a financial institution to provide the name and business contact information of a person who may be contacted with questions about the financial institution's 1071 data submission. Regulation C includes a similar requirement in § 1003.5(a)(3)(iii), and the Bureau believes it would be appropriate to require such information here. In general, the Bureau has found, from its experience with HMDA and Regulation C, that requiring the name and business contact information of a person who may be contacted with questions generally facilitates communication in the event that follow-up on a submission is required.

Paragraph 109(b)(4)

Proposed § 1002.109(b)(4) would require a financial institution that is a depository institution to provide the name of its Federal prudential regulator, if applicable. Proposed comment 109(b)(4)–1 would explain how to determine which Federal prudential regulator (*i.e.,* the OCC, the FDIC, the Board, or the NCUA) a financial institution should report. Proposed comment 109(b)(4)-2 would provide guidance on when a financial institution must report a new Federal prudential regulator, for instance, in the event of a merger or a change of charter.

Regulation C includes a similar provision in § 1003.5(a)(3)(iv), requiring financial institutions to identify the appropriate Federal agency. In the Regulation C context, the purpose of this requirement is to identify the agency to which a financial institution must report its HMDA data—often the financial institution's Federal prudential regulator for depository institutions, and other agencies for nondepository institutions.[722] Here, the Bureau believes a requirement to report a financial institution's Federal prudential regulator would be appropriate for different reasons. The reporting of a financial institution's Federal prudential regulator may enable analysts to more easily identify other information about a financial institution that its Federal prudential regulator may make publicly available, such as Call Report data; further, such additional data may be used to perform analyses of the characteristics of financial institution's 1071 data by regulator. Nondepository institutions generally do not have Federal prudential regulators and would not report one under this proposed requirement.

Paragraph 109(b)(5)

Proposed § 1002.109(b)(5) would require a financial institution to provide its Federal Taxpayer Identification Number (TIN). Proposed comment 109(b)(5)–1 would explain when a financial institution should report a new Federal TIN in the event that it obtains a new Federal TIN (for instance, because the financial institution merges with another financial institution and adopts the Federal TIN of the other financial institution).

Regulation C § 1003.5(a)(3)(iv) requires financial institutions to report Federal TIN with their HMDA submissions, and the Bureau believes such a requirement would be appropriate here as well. A financial institution's Federal TIN may be used to identify other publicly available information on a financial institution, and combine that data with a financial institution's 1071 register to enhance the types of analysis that can be conducted to further the two statutory purposes of section 1071.

Paragraph 109(b)(6)

Proposed § 1002.109(b)(6) would require a financial institution to provide its LEI. Proposed comment 109(b)(6)–1 would explain what an LEI is and would make clear that financial institutions that do not currently have an LEI must obtain one, and that financial institutions have an ongoing obligation to maintain an LEI in order to satisfy proposed § 1002.109(b)(6).

An LEI is a unique, 20-digit identifier issued by an entity endorsed or otherwise governed by the Global LEI Foundation. Regulation C requires financial institutions to obtain and use an LEI, which facilitates the analysis of HMDA data and aids in the recognition of patterns by more precisely identifying financial institutions and affiliated companies.[723] The LEI also helps financial institutions that report HMDA data generate the universal loan identifier used to identify application or application-level records in Regulation C. Similarly, in the 1071 context, a financial institution's LEI would also likely facilitate analyses of 1071 data,[724] by helping the Bureau and other stakeholders better understand a financial institution's corporate structure. The Bureau would also require, in proposed § 1002.107(a)(1), financial institutions to use their LEIs to create unique identifiers for covered applications. The Bureau believes this, in turn, would result in more sophisticated and useful analyses of the financial institution's 1071 data.

Paragraph 109(b)(7)

Proposed § 1002.109(b)(7) would require a financial institution to report its RSSD ID number, if applicable. An RSSD ID is a unique identifying number assigned to institutions, including main offices and branches, by the Federal Reserve System. All depository institutions know and regularly report their RSSD ID numbers on FFIEC regulatory forms. RSSD ID would help users of the 1071 data to link the data for a particular financial institution to other regulatory data, including the connections between a particular financial institution with others. The Bureau believes that this additional information would result in more sophisticated and useful analyses of the financial institution's 1071 data.

Proposed comment 109(b)(7)–1 would explain what a RSSD ID number is and how financial institutions that have one might find it. Financial institutions that do not have RSSD IDs, typically nondepository institutions, would not be required to obtain them, and would report ''not applicable'' in that field.

Paragraph 109(b)(8)

Proposed § 1002.109(b)(8) would require a financial institution to provide certain information on its parent entities, if applicable. This information would include the name, the LEI (if available), and the RSSD ID (if available) of the financial institution's immediate parent entity and the financial institution's top-holding parent entity.

Proposed comments 109(b)(8)–1 and –2 would provide guidance on how to identify a financial institution's immediate parent entity and a financial institution's top-holding parent entity. Proposed comment 109(b)(8)–3 would explain that a financial institution would report its parent entities' LEIs if they have them, but that no parent entity would be required to obtain an LEI if it did not already have one. Proposed comment 109(b)(8)–4 would likewise explain that a financial institution would report its parent entities' RSSD ID numbers if they had them.

The Bureau believes that the collection of information on a financial institution's structure would further both of the statutory purposes of section 1071. Data on a financial institution's organizational structure that is self-reported would be more accurate than generating such information from publicly available sources.[725]

[722] 12 U.S.C. 2803(h).

[723] 80 FR 66128, 66248 (Oct. 28, 2015) (noting that, despite the cost, the Bureau believed that the benefit of all HMDA reporters using an LEI justified the associated costs by improving the ability to identify financial institution reporting the data and link it to its corporate family).

[724] *Id.* (''By facilitating identification, this requirement will help data users achieve HMDA's objectives of identifying whether financial institutions are serving the housing needs of their communities, as well as identifying possible discriminatory lending patterns.'').

[725] Currently, the Bureau, on behalf of the FFIEC and HUD, generates and publishes information on filers including parent company and top holder information. *See* Fed. Fin. Insts. Examination Council, *Public Panel—Data Fields with Values and Definitions, https://ffiec.cfpb.gov/documentation/2021/panel-data-fields/* (last visited July 27, 2021).

From 1989 to 1998, Regulation C required financial institutions to report their parent entity information on transmittal sheets. 54 FR 51356, 51361, 51368 (Dec. 15, 1989) (adding the transmittal sheet requirement, including parent institution information, to appendix A to Regulation C); 63 FR 52140, 52141 (Sept. 30, 1998) (stating that the Board believed that the availability of information from the FFIEC website makes the continuation of the requirement for parent company information on the transmittal sheet unnecessary). In 2002, Regulation C again required financial institutions to report parent information on transmittal sheets on the grounds that data users asserted the importance of having the parent institution information associated with the HMDA data itself, rather than in a separate database provided by the National Information Center. 67 FR 7221, 7232 (Feb. 15, 2002).

In the 2014 HMDA NPRM, the Bureau proposed to continue requiring that financial institutions identify their parent companies. The Bureau stated that because information about parent companies was not yet available through the LEI, the Bureau believed it was necessary to maintain this requirement to ensure that financial institutions' submissions can be linked with those of their corporate parents. 79 FR 51731, 51861 (Aug. 29, 2014). However, required reporting of parent company information stopped under the 2015

Continued

Better structural information would, for instance, improve the accuracy of peer analyses, which would facilitate fair lending enforcement. Further analyzing trends over time would be useful for identifying institutions that may give rise to fair lending risk. Given structural changes to institutions over time, information that enables the identification of institutions consistently and accurately over time is important to this trend analysis.

In addition, the Bureau believes that information on a financial institution's structure would advance the business and community development purpose of section 1071 by facilitating the analysis of whether and how corporate structure impacts how a financial institution provides access to credit to small businesses. In particular, this structural information could be used to understand how regulation in one part of a corporate structure impacts unregulated entities within the same corporate group.

Proposed § 1002.109(b)(8) would result in more accurate and comprehensive corporate structure information by requiring financial institutions to provide not only the name of one parent entity, but the immediate parent entity of the financial institution as well as the top-holding parent of the financial institution (for some financial institutions, this would be a bank holding company). For the reasons set out in the section-by-section analyses of proposed § 1002.109(b)(6) and (7), the reporting of LEI and RSSD ID of parent entities would improve the ability of regulators and other stakeholders to map out more precisely and fully the often complex networks of a financial institution's corporate structure. This more detailed and accurate structural data, in turn, may be used to perform more sophisticated and useful analyses of the financial institution's 1071 data. In addition, this information will help the Bureau confirm whether data are appropriately being reported by financial institutions on behalf of their subsidiaries pursuant to proposed § 1002.109(a)(2).

With respect to proposed § 1002.109(b)(8), the Bureau seeks comment on whether it should require any other parent entity information to be provided by financial institutions reporting 1071 data.

Paragraph 109(b)(9)

Proposed § 1002.109(b)(9) would require a financial institution to report the type of financial institution it is, selecting the applicable type or types of institution from a list in proposed comment 109(b)(9)–1. The comment would also explain that a financial institution shall select all applicable types. The list provided in the proposed comment includes: (i) Bank or savings association, (ii) minority depository institution, (iii) credit union, (iv) nondepository institution, (v) CDFI, (vi) other nonprofit financial institution, (vii) Farm Credit System institution, (viii) government lender, (ix) commercial finance company, (x) equipment finance company, (xi) industrial loan company, (xii) fintech, and (xiii) other. Proposed comment 109(b)(9)–2 would explain that a financial institution reports the type of financial institution as ''other'' where none of the enumerated types of financial institution appropriately describe the applicable type of financial institution, and the institution reports the type of financial institution as free-form text.

The Bureau believes that information regarding the type of financial institution reporting 1071 data would greatly assist in the analysis conducted by the Bureau and other users of 1071 data. Information providing further details on types of financial institutions would help advance the statutory purposes of section 1071; fair lending analysts might use this information on the financial institution type (for instance, depository institution compared to nondepository institutions) as a control variable for their analyses. The inclusion of this information may also assist in an assessment of the business and community development needs of an area as it may provide analysts a means of determining what types of financial institutions serve certain geographic areas.

In addition, the Bureau believes that this information, combined with the parent entity information required by proposed § 1002.109(b)(8), would offer more accurate and granular data on nondepository institutions within the same corporate group as depository institutions. Currently, the National Information Center database, which contains information on the structure of corporate groups that contain banks and other financial institutions, provides little information on nondepository institutions. As set out in the section-by-section analysis of proposed § 1002.109(b)(8) above, information on corporate structure that financial institutions self-report could fill in reporting gaps, including more specific information on financial institution types.

With respect to proposed § 1002.109(b)(9), the Bureau seeks comment on whether it should consider removing, modifying, or adding any types of financial institutions to the list in proposed comment 109(b)(9)–1, including in order to manage unique privacy interests (such as, for example, whether a category for captive finance companies that lend to applicants that share the same branding should be included on the list). The Bureau further seeks comment on whether it should consider defining any of the types of financial institutions in the proposed list, in particular whether and how to define the term ''fintech.''

Paragraph 109(b)(10)

Proposed § 1002.109(b)(10) would require a financial institution to indicate whether it is not a covered financial institution under proposed § 1002.105(a) and is thus voluntarily reporting covered applications.

The Bureau believes it is important to be able to specifically identify these institutions' transactions in the data set. If reporting were restricted to only financial institutions required to report, the 1071 data would accurately reflect the overall population of financial institutions subject to 1071. However, institutions that do not meet the rule's loan-volume thresholds in proposed § 1002.105(b) may choose to voluntarily report 1071 data pursuant to proposed § 1002.5(a)(4)(vii) through (ix). Those institutions that voluntarily report data may not be representative of all potential voluntary reporters and may differ from required reporters. Without a specific designation, it may not be possible to distinguish an institution voluntarily reporting data after a single year of exceeding the loan-volume threshold from an institution reporting because it has already exceeded the loan-volume threshold in two consecutive years. The Bureau believes that users of 1071 data would benefit from being able to use this information as a control variable, resulting in better fair lending as well as business and community development analyses, to account for certain differences that may exist as between required and voluntary reporters.

HMDA final rule on the grounds that once the LEI is fully implemented, parent entity information was expected to become available. 80 FR 66128, 66248 (Oct. 28, 2015) (citing Fin. Stability Bd., LEI Implementation Grp., *Fourth Progress Notes on the Global LEI Initiative,* at 4 (Dec. 11, 2012), *http://www.financialstabilityboard.org/wp-content/uploads/r_121211.pdf?page_moved=1*)(noting that the LEI Implementation Group is developing proposals for additional reference data on the direct and ultimate parent(s) of legal entities and on relationship data more generally). However, the Bureau has subsequently encountered difficulties using LEI to obtain parent company information, and thus is proposing here to require that it be provided directly by financial institutions.

109(c) Procedures for the Submission of Data to the Bureau

ECOA section 704B(g)(1) authorizes the Bureau to prescribe rules and issue such guidance as may be necessary to carry out, enforce, and compile data pursuant to section 1071. Section 704B(g)(3) provides for the Bureau to issue guidance to facilitate compliance with the requirements of section 1071.

The SBREFA Panel recommended that the Bureau seek comment on the recordkeeping and reporting issues addressed in the SBREFA Outline,[726] including how best to implement them in a manner that minimizes cost and burden to small financial institutions. The Panel also recommended that the Bureau explore ways to streamline reporting for small financial institutions.

Proposed § 1002.109(c) would direct financial institutions to a publicly available website containing the Bureau's *Filing Instructions Guide,* which would set out technical instructions for the submission of data to the Bureau pursuant to proposed § 1002.109. Regulation C § 1003.5(a)(5) contains a comparable provision, which directs users to a Bureau website that sets out instructions for the submission of HMDA data, and the Bureau believes a similar approach would be appropriate here.

The Bureau intends to develop a system to receive, process, and publish the data collected pursuant to section 1071 and proposed subpart B. In doing so, the Bureau will benefit from what it learned in its multiyear effort in developing the HMDA Platform, through which entities file data as required under HMDA and Regulation C. The HMDA Platform satisfies regulatory requirements with an entirely web-based, open source system,[727] using a container-based microservices approach [728] and modern cloud architectures. It was designed to be continuously improved to incorporate evolving technologies and better serve HMDA data users.[729] Publication of the HMDA data is designed to meet user needs and includes, for example, a Data Browser to filter and download datasets and explore the data using an interactive map. As it did in developing the HMDA Platform, the Bureau's work in developing the section 1071 data submission system will focus on satisfying all legal requirements, promoting data accuracy, and reducing burden. Also as with HMDA, the Bureau anticipates providing a *Filing Instructions Guide* and related materials for financial institutions.

The Bureau seeks comment on this aspect of the proposal, including the provision of technical instructions for data submission via a Bureau website and how best to implement the provisions of this section in a manner that minimizes cost and burden particularly to small financial institutions while implementing all statutory obligations. The Bureau also seeks comment on ways it could streamline reporting for small financial institutions.

Other Reporting Issues

Regulation C § 1003.5(a)(1)(i) provides that a financial institution shall submit its annual loan/application register in electronic format to the appropriate Federal agency. Regulation C does not provide for the submission of HMDA data by unaffiliated third parties directly on behalf of financial institutions in the way that a parent institution may submit HMDA data on behalf of its subsidiary under § 1003.5(a)(2) and comment 5(a)-3. The Bureau understands from financial institutions that report HMDA data to the Bureau that most institutions use third party software vendors in some way to help them prepare or submit their loan/application registers to the Bureau.

The Bureau seeks comment on whether it should permit third parties (such as financial software vendors) to submit to the Bureau a small business lending application register on behalf of a financial institution, including whether financial institutions should be required to designate third parties authorized to submit registers on their behalf.

Section 1002.110 Publication of Data

Proposed § 1002.110 would address several issues surrounding publication of section 1071 data. First, proposed § 1002.110(a) would address annual publication of application-level data on the Bureau's website, subject to deletions or modifications based on the Bureau's consideration of privacy interests. Second, proposed § 1002.110(b) would state that the Bureau may, at its discretion, compile and aggregate data submitted by financial institutions and may publish such compilations or aggregations as the Bureau deems appropriate. Third, proposed § 1002.110(c) would require a covered financial institution to publish on its website a statement that its 1071 data, as modified by the Bureau, are or will be available on the Bureau's website. Finally, proposed § 1002.110(d) would provide when a covered financial institution shall make the notice required by proposed § 1002.110(c) available to the public and how long it shall maintain the notice on its website.

The Bureau is proposing § 1002.110 to implement ECOA section 704B(f)(2)(B) and (C), which require the Bureau to adopt regulations addressing the form and manner that 1071 data are made available to the public, and pursuant to its authority under 704B(g)(1) to prescribe such rules and issue such guidance as may be necessary to carry out, enforce, and compile data pursuant to section 1071. The Bureau is also proposing § 1002.110(b) pursuant to 704B(f)(3), which permits the Bureau, at its discretion, to compile and aggregate 1071 data, and to publish such aggregate data.

110(a) Publication of Small Business Lending Application Registers and Associated Financial Institution Information

ECOA section 704B(f)(2)(C) requires that the Bureau annually make the 1071 data it receives from financial institutions available to the public in a such form and in such manner as the Bureau determines by regulation. The Bureau addressed this issue in the SBREFA Outline as part of its discussion regarding privacy considerations; [730] SER and other stakeholder comments regarding privacy issues are addressed in part VI below. Proposed § 1002.110(a) would state that the Bureau shall make available to the public generally the data reported to it by financial institutions pursuant to proposed § 1002.109, subject to deletions or modifications made by the Bureau, at its discretion, if the Bureau determines that the deletion or modification of the data would advance a privacy interest. (The Bureau is proposing to make such determinations using a balancing test, as discussed in detail in part VI below.) The Bureau shall make such data available on an annual basis, by publishing it on the Bureau's website.

The Bureau seeks comment on its proposed approach to implementing ECOA section 704B(f)(2)(C).

[726] SBREFA Panel Report at 47.

[727] *See* GitHub, *CFPB/HMDA Platform, https://github.com/cfpb/hmda-platform* (last visited July 22, 2021).

[728] *See* DockerHub, *HMDA, https://hub.docker.com/u/hmda* (last visited July 22, 2021).

[729] On March 22–26, 2021, the Bureau hosted a HMDA Virtual Tech Sprint to explore other potential innovations related to HMDA data submission and publication. *See https://www.consumerfinance.gov/rules-policy/innovation/cfpb-tech-sprints/home-mortgage-disclosure-act-tech-sprint/.*

[730] SBREFA Outline at 40–41.

110(b) Publication of Aggregate Data

ECOA section 704B(f)(3) provides that the Bureau may, at its discretion ''compile and aggregate data collected under this section for its own use'' and ''make public such compilations of aggregate data.'' The Bureau did not address this issue at SBREFA.

Proposed § 1002.110(b) would state that the Bureau may, at its discretion, compile and aggregate data submitted by financial institutions pursuant to proposed § 1002.109, and make any compilations or aggregations of such data publicly available as the Bureau deems appropriate. The Bureau believes that publication of certain such compilations and aggregations may provide useful data to the public to supplement the Bureau's publication of application-level data pursuant to proposed § 1002.110(a). This is especially true of application-level data fields that the Bureau may choose, using its proposed balancing test (described in parts VI.C.1 and .2 below) to modify or delete before publication pursuant to proposed § 1002.110(a).

The Bureau seeks comment on this aspect of its proposal.

110(c) Statement of Financial Institution's Small Business Lending Data Available on the Bureau's Website and 110(d) Availability of Statements

Background

ECOA section 704B(f)(2)(B) requires that the data compiled and maintained by financial institutions shall be ''made available to any member of the public, upon request, in the form required under regulations prescribed by the Bureau.''

SBREFA Proposal Under Consideration and Feedback Received

The Bureau stated in the SBREFA Outline that it was considering proposing an approach in which financial institutions could satisfy this requirement by referring the public to the Bureau's website where 1071 data would be available.[731] Under this approach, the 1071 data would be available with any modifications or deletions required based on the Bureau's application of the balancing test described in part VI below. The Bureau also stated that it considered requiring financial institutions to make their own data available to the public directly, upon request. However, the Bureau was concerned that this approach could involve greater burden for financial institutions, lead to privacy risks resulting from errors by individual financial institutions implementing any modifications or deletions required by the Bureau, and be less efficient overall.

One SER and several industry stakeholders expressed strong support for the Bureau's proposal under consideration that the public be directed to access 1071 data via the Bureau's website, rather than requiring financial institutions to provide the data themselves upon request.[732] These stakeholders expressed concern that a requirement that financial institutions themselves provide 1071 data to the public upon request would be burdensome, adding complexity to the process, making errors more likely, and giving rise to data privacy risks. One community group asserted that the Bureau should require financial institutions to provide 1071 data within 30 days of a request from the public and, absent this, that the Bureau should make application-level 1071 data available to the public quarterly rather than annually.

The SBREFA Panel recommended, regarding this issue as well as other recordkeeping and reporting issues addressed in the SBREFA Outline, that the Bureau seek comment on these aspects of a 1071 rule, and how best to implement them in a manner that minimizes cost and burden to small financial institutions.[733]

Proposed Rule

Proposed § 1002.110(c) would require that a covered financial institution make available to the public on its website, or otherwise upon request, a statement that the covered financial institution's small business lending application register, as modified by the Bureau pursuant to proposed § 1002.110(a), is or will be available on the Bureau's website. The Bureau is proposing this approach, which is consistent with its approach under consideration at SBREFA, for the reasons discussed above, including that this approach would reduce potential burdens on financial institutions associated with publishing modified data, would reduce privacy risks resulting from errors by individual financial institutions implementing any modifications or deletions required by the Bureau, and would be more efficient overall. Regulation C (§ 1003.5(c)(1)) implements a similar statutory requirement regarding the form of data reporting and requires financial institutions to direct any public requests for HMDA data they receive to the Bureau;[734] the Bureau believes that a similar provision would be appropriate here to maintain continuity across reporting regimes, and because the Bureau believes that this provision would help ensure consistent implementation of any modification or deletion decisions that the Bureau determines would advance a privacy interest.

Proposed § 1002.110(c) would also state that a financial institution shall use language provided by the Bureau, or substantially similar language, to satisfy this requirement to provide a statement. Proposed comment 110(c)–1 would provide model language that financial institutions can use to comply with proposed § 1002.110(c). Proposed comment 110(c)–2 would provide guidance to financial institutions that do not have websites.

Proposed § 1002.110(d) would provide that a covered financial institution shall make the notice required by proposed § 1002.110(c) available to the public on its website when it submits a small business lending application register to the Bureau pursuant to proposed § 1002.110(a), and shall maintain the notice for as long as it has an obligation to retain its small business lending application registers pursuant to proposed § 1002.111(a).

The Bureau seeks comment on its proposed approach to implementing ECOA section 704B(f)(3), including how best to implement proposed § 1002.110(c) and (d) in a manner that minimizes cost and burden particularly on small financial institutions while implementing all statutory obligations.

Section 1002.111 Recordkeeping

Proposed § 1002.111 would address several aspects of the recordkeeping requirements for 1071 data. First, proposed § 1002.111(a) would require a covered financial institution to retain evidence of its compliance with this section, which includes a copy of its small business lending application register, for at least three years after submitting the register pursuant to proposed § 1002.109. Second, proposed § 1002.111(b) would require a financial institution to maintain, separately from the rest of the application and accompanying information, an applicant's responses to a financial institution's inquiries required by ECOA section 704B(b)(1) (*i.e.,* whether the applicant is a minority-owned business or a women-owned business, and regarding the ethnicity, race, and sex of the applicant's principal owners). Finally, proposed § 1002.111(c) would require that, in compiling and maintaining any records under

[731] *Id.* at 41–42.

[732] SBREFA Panel Report at 34.

[733] *Id.* at 47.

[734] 12 U.S.C. 2803(j)(1).

proposed §§ 1002.107 and 1002.111(b), or reporting data pursuant to proposed § 1002.109, a financial institution shall not include personally identifiable information concerning any individual who is, or is connected with, an applicant.

The Bureau is proposing § 1002.111 to implement ECOA section 704B(f)(2)(A), which requires financial institutions to compile and maintain 1071 data for at least three years; 704B(b)(2), which requires financial institutions to maintain a record of the responses to the inquiry required by 704B(b)(1), separate from the application and accompanying information; and 704B(e)(3), which provides that in compiling and maintaining 1071 data, a financial institution may not include personally identifiable information concerning an individual who is, or is connected with, an applicant. The Bureau is also proposing § 1002.111 pursuant to its authority under 704B(g)(1) to prescribe such rules and issue such guidance as may be necessary to carry out, enforce, and compile data pursuant to section 1071.

111(a) Record Retention

ECOA section 704B(f)(2)(A) requires that information compiled and maintained under section 1071 be retained for not less than three years after the date of preparation. In the SBREFA Outline, the Bureau stated that it was considering proposing that a financial institution retain its 1071 data for at least three years after they are submitted to the Bureau.[735] The Bureau received little feedback on this issue; a few stakeholders opined that the three-year retention period was acceptable.

The SBREFA Panel recommended, regarding this issue as well as other recordkeeping and reporting issues addressed in the SBREFA Outline, that the Bureau seek comment on these aspects of a 1071 rule, and how best to implement them in a manner that minimizes cost and burden to small financial institutions.[736]

Proposed § 1002.111(a) would require that a financial institution retain a copy of its small business lending application register for three years after the register is submitted to the Bureau pursuant to proposed § 1002.109. This proposed approach is consistent with the approach that the Bureau considered proposing at SBREFA. By way of comparison, under Regulation C, financial institutions must retain the loan/application registers that they submit to the Bureau for three years.[737] This reflects the requirement in HMDA itself that a LAR be retained for three years after it is made available.[738]

Proposed comment 111(a)–1 would provide examples of what evidence of compliance with the proposed provision is likely to include. Proposed comment 111(a)–2 would require that a creditor that is voluntarily, under § 1002.5(a)(4)(vii) and (viii), collecting information pursuant to subpart B but is not required to report that data to the Bureau, complies with proposed § 1002.111(a) by retaining evidence of compliance with subpart B for at least three years after June 1 of the year following the year that data was collected.

The Bureau seeks comment on its proposed approach to implementing ECOA section 704B(f)(2)(A), including how best to implement proposed § 1002.111(a) in a manner that minimizes cost and burden particularly on small financial institutions while implementing all statutory obligations.

111(b) Certain Information Kept Separate From the Rest of the Application

ECOA section 704B(b)(2) requires financial institutions to maintain a record of the ''responses to [the] inquiry'' required by 704B(b)(1) separate from the application and accompanying information. As discussed below and consistent with the approach set forth in E.2 of the *Overview* to this part V, the Bureau proposes to interpret the term ''responses to such inquiry'' in 704B(b)(2) to be the applicant's responses to inquiries regarding protected demographic information—that is, whether the applicant is a minority-owned business or a women-owned business, and the ethnicity, race, and sex of the applicant's principal owners.

In the SBREFA Outline, the Bureau discussed this statutory provision but did not present a proposal under consideration to address it. Some SERs quoted this statutory language in written feedback, but none provided feedback on the particular issue of keeping certain information separate from the rest of the application. One trade association stakeholder noted that, under HMDA and Regulation C, banks are permitted to inquire about and collect required data points (which include information such as the ethnicity, race, and sex of applicants' principal owners) on and with the application. This stakeholder urged the Bureau to permit the same for 1071, and further requested a safe harbor for a bank that inquires and collects required data points on or with an application.

The SBREFA Panel recommended, regarding this issue as well as other recordkeeping and reporting issues addressed in the SBREFA Outline, that the Bureau seek comment on this aspect of a 1071 rule, and how best to implement it in a manner that minimizes cost and burden to small financial institutions.[739]

Proposed § 1002.111(b) would state that a financial institution shall maintain, separately from the rest of the application and accompanying information, an applicant's responses to the financial institution's inquiries to collect data pursuant to proposed subpart B regarding whether an applicant for a covered credit transaction is a minority-owned business under proposed § 1002.107(a)(18) or a women-owned business under proposed § 1002.107(a)(19), and regarding the ethnicity, race, and sex of the applicant's principal owners under proposed § 1002.107(a)(20).

Proposed comment 111(b)–1 would explain that a financial institution may satisfy this requirement by keeping an applicant's responses to the financial institution's request pursuant to proposed § 1002.107(a)(18) through (20) in a file or document that is discrete or distinct from the application and its accompanying information. For example, such information could be collected on a piece of paper that is separate from the rest of the application form. In order to satisfy the requirement in proposed § 1002.111(b), an applicant's responses to the financial institution's request pursuant to proposed § 1002.107(a)(18) through (20) need not be maintained in a separate electronic system, nor need they be removed from the physical files containing the application. However, the financial institution may nonetheless need to keep this information in a different electronic or physical file in order to satisfy the requirements of proposed § 1002.108.

As discussed in detail above in E.2 in the *Overview* of this part V, the Bureau believes the best reading of the statutory provisions that mention the inquiry made under ECOA section 704B(b)(1)—in 704B(b)(2) as well as in 704B(c) regarding the right to refuse and 704B(d) regarding the firewall—is that they refer to applicants' responses to the inquiries regarding minority-owned and women-owned business status in proposed

[735] SBREFA Outline at 39.

[736] SBREFA Panel Report at 47.

[737] Regulation C § 1003.5(a)(1).

[738] 12 U.S.C. 2803(j)(6).

[739] SBREFA Panel Report at 47–48.

§ 1002.107(a)(18) and (19), and regarding the ethnicity, race, and sex of applicants' principal owners in proposed § 1002.107(a)(20). Each of these three data points require financial institutions to request demographic information that has no bearing on the creditworthiness of the applicant. Moreover, a financial institution could not inquire about this demographic information absent section 1071's mandate to collect and report the information, and ECOA prohibits a financial institution from discriminating against an applicant on the basis of the information. The Bureau accordingly believes that the best effectuation of congressional intent is to apply section 1071's special-protection provisions to apply to this demographic information, regardless of whether the statutory authority to collect it originates in 704B(b)(1) (women-owned business status and minority-owned business status) or 704B(e)(2)(G) (race, sex, and ethnicity of principal owners). The Bureau similarly believes that Congress did not intend these special protections to apply to any of the other applicant-provided data points proposed in § 1002.107(a), which the financial institution is permitted to request regardless of coverage under section 1071, which are not the subject of Federal antidiscrimination law, and many of which financial institutions currently use for underwriting purposes.

With respect to the stakeholder's request that the section 1071 rule mirror HMDA's approach to collection of ethnicity, race, and sex data, the Bureau notes that there is no requirement in HMDA that is comparable to ECOA section 704B(b)(2)'s requirement that certain information be kept separate from the application and accompanying information; Regulation C thus anticipates that the demographic information required under HMDA can be collected as part of the application.[740] The Bureau recognizes from stakeholder comments identified in the section-by-section analysis of proposed § 1002.107(c)(1) above that there may be potential difficulties in satisfying the proposed requirements regarding the time and manner of collecting applicant-provided data while not being able to ask for that information on the application itself. Proposed comment 111(b)–1 is intended to clarify, and facilitate compliance with, the statutory directive that financial institutions must keep certain information separate from the credit application.

The Bureau seeks comment on its proposed approach to implementing ECOA section 704B(b)(2), including how best to implement proposed § 1002.111(b) in a manner that minimizes cost and burden, particularly on small financial institutions, while implementing all statutory obligations. The Bureau also seeks comment on whether, for financial institutions that determine that underwriters or other persons should have access to applicants' demographic information pursuant to proposed § 1002.108(b), it should likewise waive the requirement in proposed § 1002.111(b) to keep that information separate from the application and accompanying information.

111(c) Limitation on Personally Identifiable Information Retained Under This Section

Background

ECOA section 704B(e)(3) provides that in compiling and maintaining any record of information under section 1071, a financial institution may not include in such record the name, specific address (other than the census tract), telephone number, electronic mail address, or any other personally identifiable information (PII) concerning any individual who is, or is connected with, an applicant.

SBREFA Proposal Under Consideration and Feedback Received

In the SBREFA Outline, the Bureau stated it was considering proposing a prohibition on including certain PII about any individuals associated with small business applicants in the small business lending application register a financial institution is required to compile, maintain, and report to the Bureau (other than the information specifically required to be collected and reported pursuant to section 1071, such as the ethnicity, race, and sex of principal owners). The Bureau also stated that this prohibition would not apply to PII collected by financial institutions outside of their specific 1071 data records.[741]

SERs and other stakeholders offered limited feedback on this issue.[742] One SER requested clarification on this statutory provision, specifically asking whether financial institutions were permitted to keep PII in their own loan-level records. A trade association supported a ban on including PII in the 1071 data. Another stated that the Bureau should issue a clarifying provision for excluding PII in compiling and maintaining any record of information from the different stages in the process (*e.g.,* bank systems, regulatory submission file). Two community group stakeholders supported a prohibition on including personally identifiable information in 1071 data to reduce potential privacy concerns surrounding release of 1071 data.

Some stakeholders expressed concern regarding a different issue related to data privacy. Federal and State laws protect the financial and data privacy of individuals, typically by imposing obligations on financial institutions to provide their customers notice and an opportunity to opt out in advance of the disclosure of their nonpublic personal information to unaffiliated third parties.[743] Several industry stakeholders expressed concern that reporting 1071 data to the Bureau may cause them to violate other data privacy laws, including State data privacy laws.

The SBREFA Panel recommended, regarding this issue as well as other recordkeeping and reporting issues addressed in the Outline, that the Bureau seek comment on these aspects of a 1071 rule, and how best to implement them in a manner that minimizes cost and burden to small financial institutions.[744]

Proposed Rule

The Bureau is proposing in § 1002.111(c) that in compiling and maintaining any records under proposed § 1002.107 or § 1002.111(b), or reporting data pursuant to proposed § 1002.109, a financial institution shall not include any name, specific address, telephone number, email address, or any PII concerning any individual who is, or is connected with, an applicant, other than as required pursuant to proposed § 1002.107 or § 1002.111(b). The prohibition on the inclusion of PII in ECOA section 704B(e)(3), which covers the ''compiling and maintaining any record of information,'' implicates proposed §§ 1002.107, 1002.109, and 1002.111, which together would address the compilation, maintenance, and reporting of 1071 data by financial institutions.

Proposed comment 111(c)–1 would clarify that the prohibition in proposed § 1002.111(c) applies to data compiled and maintained pursuant to § 1002.107, data in the small business lending application register submitted by the financial institution to the Bureau under proposed § 1002.109, the version of the

[740] *See* 80 FR 66128, 66192–93 (Oct. 28, 2015).

[741] SBREFA Outline at 39.

[742] SBREFA Panel Report at 34.

[743] *See, e.g.,* Gramm-Leach-Bliley Act, 15 U.S.C. 6801 *et seq.;* Regulation P, 12 CFR part 1016.

[744] SBREFA Panel Report at 47.

register that the financial institution maintains under proposed § 1002.111(a), and the separate record of certain information created pursuant to proposed § 1002.111(b).

Proposed comment 111(c)–2 would address the types of information (including PII) that a financial institution is prohibited from including in the data it compiles and maintains pursuant to proposed § 1002.107, in its records under proposed § 1002.111(b), or in data reported to the Bureau under proposed § 1002.109. The examples of types of PII identified in proposed comment 111(c)–2 are illustrative and not exhaustive.

Proposed comment 111(c)–3 would clarify that the prohibition in proposed § 1002.111(c) does not extend to the application or any other records that the financial institution maintains. This comment is intended to address the request by a SER and another stakeholder that the Bureau clarify that this prohibition does not extend more broadly to a financial institution's application or loan-related files.

Proposed comment 111(c)–4 would clarify that the prohibition in proposed § 1002.111(c) does not bar financial institutions from providing to the Bureau, pursuant to proposed § 1002.109(b)(3), the name and business contact information of the person who may be contacted with questions about the financial institution's submission.

The Bureau seeks comment on its proposed approach to implementing ECOA section 704B(e)(3), including how best to implement this requirement in a manner that minimizes cost and burden, particularly on small financial institutions, while implementing all statutory obligations. Regarding comments by stakeholders that reporting 1071 data to the Bureau could give rise to a potential conflict with the data protection and privacy laws prohibiting the disclosure of nonpublic personal information to unaffiliated third parties, the Bureau notes that such laws typically provide an exemption for disclosures made pursuant to Federal and State law.[745] The Bureau seeks comment on whether the requirements in this proposed rule could conflict with other data privacy or data protection laws, and whether the Bureau might need to use its preemption authority under ECOA,[746] Regulation B,[747] and/or section 1041(a)(1) of the Dodd-Frank Act to ensure that financial institutions do not violate State law in reporting 1071 data to the Bureau. The Bureau also seeks comment on whether it should include a provision to preempt any State data privacy or data protection laws that would prohibit the collection, maintenance, and reporting to the Bureau of 1071 data.

Section 1002.112 Enforcement

Proposed § 1002.112 would address several issues related to the enforcement of violations of the requirements of proposed subpart B. First, proposed § 1002.112(a) would state that a violation of section 1071 or subpart B of Regulation B is subject to administrative sanctions and civil liability as provided in sections 704 and 706 of ECOA. Second, proposed § 1002.112(b) would provide that a bona fide error in compiling, maintaining, or reporting data with respect to a covered application is an error that was unintentional and occurred despite the maintenance of procedures reasonably adapted to avoid such an error. This proposed provision also addresses the maintenance of procedures reasonably adapted to avoid such errors. Third, proposed § 1002.112(c) would identify four safe harbors under which certain errors—namely, certain types of incorrect entries for census tract, NAICS code, small business status, and application date—would not constitute violations of ECOA or Regulation B.

The Bureau is proposing § 1002.112 to implement sections 704 and 706 of ECOA, pursuant to its authority under ECOA section 704B(g)(1) to prescribe such rules and issue such guidance as may be necessary to carry out, enforce, and compile data pursuant to section 1071 and pursuant to its authority under 704B(g)(2) to adopt exceptions to any requirement of section 1071 and to exempt any financial institution or class of financial institutions from the requirements of section 1071, as the Bureau deems necessary or appropriate to carry out the purposes of section 1071.

112(a) Administrative Enforcement and Civil Liability

A violation of section 1071 is subject to the enforcement provisions of ECOA, of which section 1071 is a part. ECOA contains administrative enforcement provisions in section 704,[748] and it provides for civil liability in section 706.[749] The enforcement provisions in existing Regulation B (§ 1002.16(a)(1) and (2)) cross-reference and paraphrase these administrative enforcement and civil liability provisions of ECOA.

Proposed § 1002.112(a) would provide that a violation of section 1071 or subpart B of Regulation B is subject to administrative sanctions and civil liability as provided in sections 704 and 706 of ECOA, where applicable. Regarding stakeholder concerns about private litigants bringing actions for non-compliance, the Bureau believes that its administrative enforcement mechanisms would be appropriate and adequate to address most instances of non-compliance by financial institutions that report 1071 data to the Bureau, based on its experience with Regulation C and HMDA. The Bureau believes that proposed § 1002.112(b) addresses the concerns raised by stakeholders that requested that penalties for non-compliance not be assessed in the first year that 1071 data is collected, given the likelihood of unintentional errors as covered financial institutions learn how to implement this rule.

The Bureau seeks comment on its proposed approach to administrative enforcement and civil liability.

112(b) Bona Fide Errors

SBREFA Proposal Under Consideration and Feedback Received

During the SBREFA process, SERs and other industry stakeholders expressed concern about private litigants suing them for non-compliance with the 1071 rule.[750] In addition, several SERs requested that the Bureau not assess penalties for the first year of 1071 data collection and reporting, as it did following the 2015 HMDA final rule; prior to the compliance date for that rule, the Bureau issued a policy statement announcing it would not seek penalties for errors for the first calendar year (2018) of data collected under the amended Regulation C.[751] Stakeholders

[745] *See, e.g.,* Gramm-Leach-Bliley Act section 502(e)(8), 15 U.S.C. 6802(e)(8), and Regulation P § 1016.15(a)(7)(i) (stating that the limitations on disclosing nonpublic personal information to unaffiliated third parties do not apply if the information is disclosed to comply with Federal, State, or local laws, rules and other applicable legal requirements); California Consumer Privacy Act, Cal. Civ. Code 1798.145(a)(1) (noting that the obligations imposed on businesses by CCPA ''shall not restrict a business' ability to . . . comply with federal, state, or local laws'').

[746] 15 U.S.C. 1691d(f).

[747] Existing § 1002.11.

[748] 15 U.S.C. 1691c.

[749] 15 U.S.C. 1691e.

[750] The SER feedback discussed in this section-by-section analysis can be found in the SBREFA Panel Report at 34–36.

[751] Bureau of Consumer Fin. Prot., *CFPB Issues Public Statement On Home Mortgage Disclosure Act Compliance* (Dec. 21, 2017), *https://www.consumerfinance.gov/about-us/newsroom/cfpb-issues-public-statement-home-mortgage-disclosure-act-compliance/* (noting that the Bureau did not intend to require data resubmission unless data errors were material, or assess penalties with respect to errors for HMDA data collected in 2018 and reported in 2019).

asked the Bureau to emulate that approach for 1071. Other stakeholders expressed concern about the potential consequences of committing what they viewed as technical or inadvertent errors in collecting or reporting 1071 data. One financial institution stakeholder suggested that the 1071 rule adopt or emulate the good faith error provisions set out in Regulation C, including § 1003.6(b)(1), which provides that an error in compiling or recording data for a covered loan or application is not a violation of HMDA or Regulation C if the error was unintentional and occurred despite the maintenance of procedures reasonably adapted to avoid such an error. Stakeholders also referred to the existing error-related exemptions in ECOA and Regulation B.[752] ECOA's civil liability provision states that creditors will not be liable for acts done or omitted in good faith in conformity with any official rule, regulation, or interpretation thereof by the Bureau.[753]

Proposed Rule

Proposed § 1002.112(b) would provide that a bona fide error in compiling, maintaining, or reporting data with respect to a covered application is an error that was unintentional and occurred despite the maintenance of procedures reasonably adapted to avoid such an error. A bona fide error is not a violation of ECOA or subpart B. A financial institution is presumed to maintain procedures reasonably adapted to avoid errors with respect to a given data field if the number of errors found in a random sample of the financial institution's submission for the data field does not equal or exceed a threshold specified by the Bureau for this purpose in proposed appendix H. However, an error is not a bona fide error if either there is a reasonable basis to believe the error was intentional or there is other evidence that the financial institution did not maintain procedures reasonably adapted to avoid such errors.

The Bureau believes that a similar approach to Regulation C, modified and combined with the approach taken by Federal agencies in HMDA examinations, would be appropriate here. Regulation C § 1003.6(b)(1) provides that an error in compiling or recording data for a covered loan or application is not a violation of HMDA or Regulation C if the error was unintentional and occurred despite the maintenance of procedures reasonably adapted to avoid such an error. In an examination of a financial institution for compliance with Regulation C, a financial institution may make a certain number of unintentional errors in a testing sample of applications for a given data field in the institution's loan/application register (LAR), the HMDA analog to the small business lending application register, before it must resubmit its LAR. These tolerance thresholds are based on the number of loans or applications in a LAR as set out in the HMDA tolerances table in the FFIEC's Interagency HMDA examination procedures.[754]

For instance, as described in the HMDA tolerances table, a bank that submitted 45 applications is subject to a threshold of three inadvertent errors per data field based on the review of a random sample of 30 applications in the bank's LAR; a bank that submitted 45,000 applications would be subject to a threshold of four inadvertent errors per data field based on a sample of 79 applications. The tolerances thresholds, as a percentage of the random sample of applications reviewed, become more stringent as the number of total applications rises.

The Bureau would provide a similar table of thresholds in proposed appendix H and incorporate it in the bona fide error provision as set out in proposed § 1002.112(b). Under this proposed provision and the table of thresholds in proposed appendix H, financial institutions that report a number of errors equal to or below the applicable thresholds are presumed to have in place procedures reasonably adapted to avoid errors; those that report a number of errors above the applicable thresholds are not presumed to have in place procedures reasonably adapted to avoid errors. The Bureau believes that this approach would be broadly consistent with the approach it has taken for HMDA.[755] The Bureau also believes that this approach would address the concerns expressed by stakeholders regarding liability for some data reporting errors, especially in the earlier years of reporting, as processes are first being implemented. Moreover, the Bureau believes that this provision will help to ensure the accuracy of the data submitted by requiring the maintenance of appropriate procedures; at the same time, this provision will prevent financial institutions from being subjected to liability for some difficult-to-avoid errors that could drive those institutions from the small-business lending market. Therefore, the Bureau believes this provision is necessary to carry out, enforce, and compile data pursuant to section 1071, as well as necessary or appropriate to carrying out section 1071's purposes.

Proposed comment 112(b)–1 would explain that a financial institution is presumed to maintain procedures reasonably adapted to avoid errors with respect to a given data field if the number of errors found in a random sample of the financial institution's submission for the data field does not equal or exceed a threshold specified by the Bureau for this purpose. Proposed comment 112(b)–1 would also explain that the Bureau's thresholds appear in column C of the table in proposed appendix H, and that the size of the random sample shall depend on the size of the financial institution's small business lending application register, as shown in column A of the table in appendix H.

Proposed comment 112(b)–2 would provide that, for purposes of determining bona fide errors under § 1002.112(b), the term ''data field'' generally refers to individual fields, but that, with respect to information on the ethnicity or race of an applicant or borrower, or co-applicant or co-borrower, a data field group may consist of more than one field. If one or more of the fields within an ethnicity or race field group have errors, they count as one (and only one) error for that data field group.

Proposed comment 112(b)–3 would provide that an error that meets the criteria for one of the four safe harbor provisions in proposed § 1002.112(c) would not be counted as an error for purposes of determining whether a financial institution has exceeded the error threshold for a given data field.

The Bureau seeks comment on its proposed approach to bona fide errors, including whether the tolerance levels in proposed appendix H are appropriate.

112(c) Safe Harbors

Proposed § 1002.112(c) would establish four safe harbor provisions, providing that certain types of errors would not constitute violations of ECOA or Regulation B. Proposed § 1002.112(c)(1) would provide a safe harbor for an incorrect entry for census tract obtained by correct use of a geocoding tool provided by the FFIEC or the Bureau. Proposed § 1002.112(c)(2) would provide a safe harbor for an incorrect NAICS code determined by a financial institution under certain circumstances. Proposed

[752] *See, e.g.,* § 1002.16(c).

[753] 15 U.S.C. 1691e(e).

[754] Fed. Fin. Insts. Examination Council, *Interagency Examination Procedures: HMDA* (Apr. 2019), *https://files.consumerfinance.gov/f/documents/cfpb_supervision-and-examination-manual_hmda-exam-procedures_2019-04.pdf.*

[755] *Home Mortgage Disclosure (Regulation C),* 80 FR 66128, 66269 (Oct. 28, 2015).

§ 1002.112(c)(3) would provide a safe harbor for the collection of applicants' protected demographic information pursuant to proposed § 1002.107(a)(18) through (20) after an initially erroneous determination that an applicant is a small business. Proposed § 1002.112(c)(4) would provide a safe harbor for the reporting of an application date that is within three calendar days of the actual application date.

As described in further detail below, the Bureau is proposing the four safe harbors established in proposed § 1002.112(c) pursuant to its authority under ECOA and as amended by section 1071. Section 703 of ECOA provides the Bureau the authority to prescribe regulations to carry out the purposes of ECOA, including such adjustments and exceptions for any class of transactions that in the judgment of the Bureau are necessary or proper to effectuate the purposes of ECOA, to prevent circumvention or evasion thereof, or to facilitate or substantiate compliance therewith. Section 704B(g)(1) provides that the Bureau shall prescribe such rules as may be necessary to carry out, enforce, and compile data pursuant to section 1071. Section 704B(g)(2) authorizes the Bureau to adopt exceptions to any requirement of section 1071 and to exempt any financial institution or class of financial institutions from the requirements of section 1071, as the Bureau deems necessary or appropriate to carry out the purposes of section 1071.

112(c)(1) Incorrect Entry for Census Tract

The Bureau received feedback on the SBREFA Outline,[756] concerning a provision in Regulation C providing for a good faith error exemption in inadvertently selecting the wrong census tract for a property. In response, the Bureau is proposing § 1002.112(c)(1), which would provide that an incorrect entry for census tract is not a violation of ECOA or this subpart if the financial institution obtained the census tract by correctly using a geocoding tool provided by the FFIEC or the Bureau. Regulation C § 1003.6(b)(2) contains a similar provision, and the Bureau believes a similar approach would be appropriate here. Especially in light of the years that financial institutions have already been relying on the FFIEC geocoding tool in the HMDA context, the Bureau believes financial institutions would be justified in expecting not to be held liable for reporting erroneous information provided by the FFIEC or Bureau. Additionally, the Bureau believes that this proposed safe harbor will ultimately improve the accuracy of the data submitted by encouraging the use of reliable FFIEC geocoding tools, and preventing financial institutions from being subjected to liability for some difficult-to-avoid errors that could drive those institutions either to eschew these useful tools or exit the small business lending market. Therefore, the Bureau believes this provision is necessary to carry out, enforce, or compile data pursuant to section 1071, and necessary or appropriate to carry out section 1071's purposes.

Proposed comment 112(c)(1)–1 would explain that the safe harbor provision under proposed § 1002.112(c)(1) would not extend to a financial institution's failure to provide the correct census tract number for a covered application on its small business lending application register, as required by proposed § 1002.107(a)(13), because the FFIEC or Bureau geocoding tool did not return a census tract for the address provided by the financial institution. In addition, proposed comment 112(c)(1)–1 would explain that this safe harbor provision would not extend to a census tract error that results from a financial institution entering an inaccurate address into the FFIEC or Bureau geocoding tool.

The Bureau seeks comment on its proposed approach to this safe harbor.

112(c)(2) Incorrect Entry for NAICS Code

As discussed in the section-by-section analysis of proposed § 1002.107(a)(15) above, the Bureau is proposing to require financial institutions to collect an applicant's 6-digit NAICS code. A financial institution would be permitted to rely on an applicant's representations or on other information regarding its NAICS code as described in proposed comments 107(a)(15)–3 and –4. Proposed § 1002.112(c)(2) would apply when a financial institution does not rely on such information, but instead the financial institution identifies the NAICS code for an applicant and the identified NAICS code is incorrect. Specifically, proposed § 1002.112(c)(2) would provide that the incorrect entry for that institution-identified NAICS code is not a violation of subpart B, provided that the first two digits of the NAICS code are correct and the financial institution maintains procedures reasonably adapted to correctly identify the subsequent four digits.

The Bureau is proposing this safe harbor pursuant to its statutory authority under section 704B(g)(1) and (2). This safe harbor would address comments from several stakeholders who stated that correctly classifying an applicant's NAICS code can be difficult, as the business may change over time, codes may have overlapping definitions, small businesses often do not know their NAICS code, and classifications may be prone to human error. The Bureau believes that this proposed safe harbor would also alleviate concerns about NAICS codes classifications being subject to change based on SBA rulemaking (in situations where the SBA does not change the 2-digit sector code). The Bureau believes that this proposed safe harbor will help to ensure the accuracy of the data submitted by requiring the maintenance of appropriate procedures and requiring that the most crucial first two digits be correct in every instance; at the same time, the proposed safe harbor will prevent financial institutions from being subjected to liability for some difficult-to-avoid errors. Therefore, the Bureau believes this provision is necessary and appropriate to carry out section 1071 and its purposes.

The Bureau seeks comment on its proposed approach to this safe harbor. As discussed in the section-by-section analysis of proposed § 1002.107(a)(15) above, the Bureau seeks comment on its proposal to collect 6-digit NAICS codes with the safe harbor described in proposed § 1002.112(c)(2). The Bureau also seeks comment on whether requiring a 3-digit NAICS code with no safe harbor would be a better alternative.

112(c)(3) Incorrect Determination of Small Business Status

Proposed § 1002.112(c)(3) would provide that a financial institution that initially determines that an applicant is a small business, as defined in proposed § 1002.106(b), but then later concludes the applicant is not a small business, does not violate ECOA or Regulation B if it collected information pursuant to subpart B regarding whether an applicant for a covered credit transaction is a minority-owned business or a women-owned business, and the ethnicity, race, and sex of the applicant's principal owners. Proposed § 1002.112(c)(3) would further provide that a financial institution seeking to avail itself of this safe harbor shall comply with the requirements of subpart B as otherwise required pursuant to proposed §§ 1002.107, 1002.108, and 1002.111 with respect to the collected information.

The Bureau is proposing this safe harbor pursuant to its authority under

[756] SBREFA Outline at 41–42.

section 703(a) of ECOA, which allows the Bureau to provide for certain exceptions to Regulation B ''as in the judgment of the Bureau are necessary or proper to effectuate the purposes of [ECOA], to prevent circumvention or evasion thereof, or to facilitate or substantiate compliance therewith.'' The Bureau believes the proposed safe harbor is needed to address situations where the financial institution initially determines that an applicant is a small business and believes it is required under the 1071 rule to collect protected demographic information, but later concludes that the applicant is not a small business when it, for example, obtains updated gross annual revenue information. In such situations, the financial institution may be uncertain about whether it ''may obtain information required by a regulation'' under existing § 1002.5(a)(2), which could deter financial institutions from complying with the 1071 rule. The Bureau believes that this safe harbor would facilitate compliance with ECOA by eliminating a situation in which financial institutions might be deterred from appropriately collecting applicants' protected demographic information due to the possibility that their understanding of an applicant's small business status might change during the course of the application process.

Proposed § 1002.112(c)(3) would make it clear that a financial institution does not violate the existing Regulation B general prohibition against inquiring about the race, national origin, or sex of an applicant as long as the financial institution complies with the requirements of the subpart B, including the requirements set forth in proposed §§ 1002.107, 1002.108, and 1002.111 with respect to the collected information. Proposed comment 106(b)–1 would clarify that the financial institution does not report the application on its small business lending application register pursuant to § 1002.109.

The Bureau seeks comment on its proposed approach to this safe harbor.

112(c)(4) Incorrect Application Date

Proposed § 1002.107(a)(2) would require financial institutions to report application date. In the SBREFA Outline, the Bureau stated that it was considering proposing providing financial institutions a grace period of several days on either side of the date reported to reduce the compliance burden of pinpointing an exact date on which an application was received.[757] As discussed in the section-by-section analysis of proposed § 1002.107(a)(2) above, several SERs and other stakeholders were strongly in favor of the Bureau providing such a grace period to reduce compliance burden.

In light of SER and other stakeholder feedback, proposed § 1002.112(c)(4) would provide that a financial institution does not violate proposed subpart B if it reports on its small business lending application register an application date that is within three calendar days of the actual application date pursuant to proposed § 1002.107(a)(2). The Bureau believes that this proposed provision will ensure the level of accuracy needed for the resulting data to be useful in carrying out section 1071's purposes and minimize the risk that financial institutions will be held liable for difficult-to-avoid errors, which might otherwise affect their participation in the small business lending market. Therefore, the Bureau believes this provision is necessary and appropriate to carry out section 1071 and its purposes. The Bureau seeks comment on its proposed approach to this safe harbor.

Section 1002.113 Severability

Proposed § 1002.113 would provide that the provisions of subpart B are separate and severable from one another, and that if any provision is stayed or determined to be invalid, the remaining provisions shall continue in effect.

This is a standard severability clause of the kind that is included in many regulations to clearly express agency intent about the course that is preferred if such events were to occur.

Section 1002.114 Effective Date, Compliance Date, and Special Transitional Rules

Proposed § 1002.114 would address when the proposed rule would be effective and when financial institutions would be required to comply with the rule, as well as how financial institutions could choose to comply with the rule during this transitional period. Proposed § 1002.114(a) would state that this small business lending data collection rule would become effective 90 days after the final rule is published in the **Federal Register**. Proposed § 1002.114(b) would provide that compliance with the rule would not be required until approximately 18 months after the final rule is published in the **Federal Register**. Proposed § 1002.114(c)(1) would permit covered financial institutions to begin collecting information pursuant to proposed § 1002.107(a)(18) through (20) beginning 12 months prior to the compliance date. Proposed § 1002.114(c)(2) would permit a financial institution to use a different time period to determine whether it is a covered financial institution under proposed § 1002.105(b) as of the compliance date.

The Bureau is proposing § 1002.114 pursuant to its authority under ECOA section 704B(g)(1) to prescribe such rules and issue such guidance as may be necessary to carry out, enforce, and compile data pursuant to section 1071. The Bureau is also proposing § 1002.114(c) pursuant to its authority under section 703(a) of ECOA to prescribe regulations to carry out the purposes of ECOA and provide exceptions as in the judgment of the Bureau are necessary or proper to effectuate the purposes of or facilitate or substantiate compliance with ECOA.

114(a) Effective Date and 114(b) Compliance Date

Background

Section 1071 does not specify an implementation period, though pursuant to ECOA section 704B(f)(1), financial institutions must report 1071 data to the Bureau on an annual basis. In the SBREFA Outline, the Bureau noted that it sought to ensure that financial institutions have sufficient time to implement the 1071 rule, and stated that it was considering proposing that financial institutions have approximately two calendar years for implementation.[758]

SBREFA Proposal Under Consideration and Feedback Received

SER and stakeholder feedback regarding the two-year period for implementation under consideration was mixed.[759] Some found the two-year period to be adequate, some requested more time, and a few urged for less. Some provided related feedback about adopting a grace period for data errors in the first year(s) after the 1071 rule becomes effective.

A number of stakeholders agreed that two years was sufficient time to implement a 1071 rule. SERs generally supported a two-year implementation period. Several SERs with completely online operations felt that two years was sufficient time to implement the eventual 1071 rule; some estimated that they could do it in less time. A large number of industry stakeholders (including national and regional trade

[757] *Id.* at 26.

[758] *Id.* at 42.

[759] The SER feedback discussed in this section-by-section analysis can be found in the SBREFA Panel Report at 36–37.

associations, community banks, fintech lenders, and others) accepted a two-year implementation period as adequate or said that two years was the minimum amount of time needed to implement 1071 (though some of these stakeholders also requested more time, as discussed below). A few qualified their statements, however, as dependent on the Bureau not adopting additional data points beyond those discussed in the SBREFA Outline or not making further changes to the rule once it is finalized.

A number of other stakeholders argued that two years was inadequate time to implement a 1071 rule. Some other SERs that do not have primarily online operations and do not have experience with other Federal data reporting regimes such as HMDA said it would be hard to project how long implementation would take, but that it could potentially take three years or more. One SER said that two years would not be enough as currently there are no data collection vendors for 1071 compliance. Another SER said clear and concise definitions were important and expressed frustration that definitive answers to compliance-related questions (whether from the Bureau or third-party vendors) can be hard to come by, which could stymie implementation efforts. One SER suggested that it was overly optimistic for other SERs (mostly CDFIs) to say they would be able to implement 1071 quickly.

Some of the industry stakeholders mentioned above requested more time, up to three years, and suggested that two years was the bare minimum they required to implement a 1071 rule, given the need to create new systems, policies and procedures, to change their products as needed, and to train personnel in compliance. One large bank trade association stakeholder requested three years coupled with a two-year grace period.

Several trade associations representing community banks and credit unions asserted that two years was inadequate for smaller financial institutions that had no experience with HMDA or similar reporting regimes. These commenters suggested tiered implementation, with larger financial institutions (or HMDA reporters) reporting earlier and smaller financial institutions later. Similarly, two smaller trade associations asserted that smaller and mission-based lenders should have up to three years to implement 1071.

A number of stakeholders argued that two years was too much time to implement a 1071 rule. Several community group stakeholders opposed a two-year implementation period as too long and instead supported a one-year period. These groups opposed a longer implementation period on the grounds that ten years have elapsed since Dodd-Frank Act was passed and the need for data to analyze disparities in small business lending is urgent. A State-level trade association suggested a one-year period for larger financial institutions and a longer period for smaller financial institutions.

Some stakeholders requested a grace period associated with the first year of implementation. A few SERs suggested that the Bureau adopt a grace period of some kind during which financial institutions would not be penalized for erring in trying to comply with a 1071 regulation. This grace period would be akin to the first year in which the 2015 revisions to Regulation C were effective, when examinations were used to troubleshoot and perfect data reporting rather than penalize reporters. Two other industry stakeholders similarly requested a safe harbor for any data collection errors for the first one or two years following the rule's effective date.

The SBREFA Panel recommended that the Bureau seek comment on the sufficiency of a two-year implementation period, and in particular what aspects of a 1071 rule might require more or less time to implement.[760] The Panel further recommended that the Bureau seek comment on ways to facilitate implementation for small financial institutions, particularly those that have had no experience with any kind of Federal data reporting regime.

Proposed Rule

The Bureau is proposing in § 1002.114(a) that its small business lending data collection rule become effective 90 days after the final rule is published in the **Federal Register**. At that time, the rule would become part of the Code of Federal Regulations; this would permit financial institutions to avail themselves of the special transitional rule in proposed § 1002.114(c)(2), discussed below. However, pursuant to proposed § 1002.114(b), compliance with the final rule would not be required until approximately 18 months after the final rule is published in the **Federal Register**.

The Bureau's proposed approach is a compromise between the two-year implementation period under consideration at SBREFA that a slight majority of stakeholders found acceptable and the shorter one-year implementation period requested by certain stakeholders. The Bureau believes that the statutory purposes of section 1071 are better served by an earlier compliance date that would, in turn, result in earlier publication of data by the Bureau. The Bureau acknowledges the preference of various SERs and other stakeholders for a compliance period of two or more years to comply. The Bureau notes, however, that some SERs and other industry stakeholders said that they could be ready in less than two years. The Bureau agrees with the stakeholders that asserted that a shorter implementation period is preferable given the length of time that has elapsed since the passage of section 1071 of the Dodd-Frank Act.

The Bureau notes that it does not anticipate setting the compliance date at exactly 18 months following publication of the final rule in the **Federal Register**. Rather, the Bureau expects to specify a date certain for a compliance date, which it anticipates will be approximately 18 months after the final rule is published. Thus, for example, if the Bureau published the final rule in June 2023, the Bureau would set the compliance date at January 1, 2025.

If the final rule were published early or late in the year, because proposed § 1002.114(b) would require compliance approximately 18 months after publication of the final rule, the compliance date would be set in mid-year. For instance, if the final rule were published in the **Federal Register** in March 2023, the compliance date would be in September 2024. Based on this possibility, the Bureau is considering whether to permit or require financial institutions to collect data on a partial year basis in the remainder of the first year following the compliance date, as the section-by-section analysis of proposed § 1002.109(a)(1) addresses. For example, if the compliance date were July 1, 2024, the Bureau would permit or require all financial institutions to collect and report data pursuant to proposed § 1002.109(a) for the period July 1 to December 31, 2024, and financial institutions would report that data by June 1, 2025 (pursuant to proposed § 1002.109(a)(1)(i)). After 2024, financial institutions would comply with proposed § 1002.109(a), which requires the collection of 1071 data on a calendar year basis.

The Bureau believes that permitting or requiring a partial year collection in the initial year of compliance would further the purposes of section 1071 by expediting the collection and, potentially, the publication of data to be used to further the fair lending and community development purposes of the statute.

[760] *Id.* at 48.

The Bureau seeks comment on its proposed effective date of 90 days following publication of an eventual final rule and its proposed compliance date of approximately 18 months after the publication of its final rule to implement section 1071. In particular, the Bureau seeks comment on which aspects of the Bureau's proposed rule might require more or less time to implement, and ways in which the Bureau could facilitate implementation for small financial institutions, especially those that have had no experience with other Federal data reporting regimes. The Bureau further seeks comment on two alternatives: (a) Whether the Bureau should adopt a compliance date of two years after the publication of the final rule; and (b) whether the Bureau should adopt different compliance dates based on the size of a financial institution (*e.g.,* one year for large financial institutions, two years for smaller institutions).

114(c) Special Transitional Rules

The Bureau is proposing two transitional rules in § 1002.114(c) to facilitate the compliance of financial institutions with subpart B. Proposed § 1002.114(c)(1) would permit covered financial institutions to collect information regarding applicants' minority-owned business status, women-owned business status, and the race, sex, and ethnicity of applicants' principal owners under proposed § 1002.107(a)(18) through (20) beginning 12 months prior to the compliance date. Proposed § 1002.114(c)(2) would provide that to determine if it is a covered financial institution as of the compliance date, a financial institution is permitted to use its originations of covered credit transactions for small businesses in the second and third preceding calendar years (rather than its originations in the two immediately preceding calendar years).

The Bureau believes that these transitional rules are necessary to carry out, enforce, and compile data pursuant to section 1071, will carry out the purposes of ECOA, and are necessary or proper to effectuate the purposes of ECOA and facilitate or substantiate compliance therewith.

114(c)(1) Collection of Information Prior to the Compliance Date

Proposed § 1002.114(c)(1) would provide that a financial institution that will be a covered financial institution as of the compliance date in proposed § 1002.114(b) is permitted, but not required, to collect information regarding whether an applicant for a covered credit transaction is a minority-owned business under proposed § 1002.107(a)(18), a women-owned business under proposed § 1002.107(a)(19), and the ethnicity, race, and sex of the applicant's principal owners under proposed § 1002.107(a)(20) beginning 12 months prior to the compliance date. A financial institution collecting such information pursuant to proposed § 1002.114(c)(1) must do so in accordance with the requirements set out in proposed §§ 1002.107(18) through (20) and 1002.108. The Bureau believes that this provision would give financial institutions time to test their procedures and systems for compiling and maintaining this information in advance of actually being required to collect and subsequently report it to the Bureau. Under this proposed provision, financial institutions would have time to adjust any procedures or systems that may result in the inaccurate compilation or maintenance of applicants' protected demographic information, the collection of which is required by section 1071 but otherwise generally prohibited under ECOA and Regulation B. (Financial institutions could of course collect the other information that would be required by this proposed rule at any time, without needing express permission in Regulation B to do so.) The Bureau believes that this provision would facilitate compliance and improve the quality and accuracy of the 1071 data reported to the Bureau and therefore is necessary to carry out, enforce, and compile data pursuant to section 1071, and will carry out the purposes of ECOA, and is necessary or proper to effectuate the purposes of ECOA and facilitate or substantiate compliance therewith.

The Bureau seeks comment on the approach in this proposal.

114(c)(2) Determining Whether a Financial Institution is a Covered Financial Institution for Purposes of This Subpart

Proposed § 1002.114(c)(2) would provide that for purposes of determining whether a financial institution is a covered financial institution under proposed § 1002.105(b) as of the compliance date specified in proposed § 1002.114(b), a financial institution would be permitted, but not required, to use its originations of covered credit transactions for small businesses in the second and third preceding calendar years (rather than its originations in the two immediately preceding calendar years). The Bureau believes that this proposed provision would provide greater clarity and certainty to financial institutions as to whether or not they would be covered financial institutions as of the compliance date. This may be particularly important for those financial institutions that originate a volume of covered credit transactions close to the threshold under proposed § 1002.105(b). The Bureau believes this provision is necessary to carry out, enforce, and compile data pursuant to section 1071.

The Bureau seeks comment on the approach in this proposal.

Appendix E to Part 1002—Sample Form for Collecting Certain Applicant-Provided Data Under Subpart B

Background

ECOA section 704B(b) requires financial institutions to inquire whether applicants are women-owned businesses, minority-owned businesses, or small businesses, and to maintain a record of the responses to that inquiry separate from the applications and accompanying information.

Additionally, ECOA section 704B(e) requires financial institutions to compile, maintain, and report certain information, including the ethnicity, race, and sex of an applicant's principal owners. Section 1071 does not set out what categories should be used when collecting and reporting this information.

ECOA section 704B(c) provides that applicants for credit may refuse to provide information requested pursuant to 704B(b), including minority-owned and women-owned business status.

Under ECOA section 704B(d)(2), if a financial institution determines that an underwriter, employee, or officer involved in making a determination ''should have access'' to any information provided by the applicant pursuant to a request under section 704B(b), the financial institution must provide a notice of ''the access of the underwriter to such information,'' along with notice that the financial institution may not discriminate on the basis of such information.

SBREFA Proposal Under Consideration and Feedback Received

In the SBREFA Outline, the Bureau stated that it was considering developing a sample data collection form to assist industry in collecting the principal owners' ethnicity, race, and sex and to communicate an applicant's right to refuse to provide such information. The Bureau stated in the SBREFA Outline that this sample data collection form would also include the definition of principal owner and clarify that it is possible, depending on the factual circumstances, that no one will

be identified as a principal owner.[761] It also stated that the Bureau was considering proposing simplified applicant-facing materials to aid industry in collecting minority-owned business status and women-owned business status. Specifically, for these applicant-facing materials and industry clarifications, the Bureau stated in the SBREFA Outline that it was considering proposing the following definitions: (1) ''Ownership'' to mean directly or indirectly having an equity interest in a business (*i.e.,* directly or indirectly, through any contract, arrangement, understanding, relationship, or otherwise, owning an equity interest in the business); (2) ''control'' of a business to mirror the CDD rule, where it means having significant responsibility to control, manage, or direct a business; and (3) the ''accrual of net profit or loss'' with reference to generally accepted accounting practices and any applicable Internal Revenue Service standards.[762] Finally, the Bureau stated in the SBREFA Outline that it was considering developing model disclosures that financial institutions could use when providing the notice under ECOA section 704B(d)(2).[763]

Some SERs requested that the Bureau develop a uniform collection form to assist financial institutions with the collection of reporting of minority-owned business status, women-owned business status, and the race, sex, and ethnicity of principal owners. One SER suggested developing a sample data collection form similar to the one used for HMDA data collection and including the same disclosures. One commenter noted that the use of a model form may increase the uniformity and consistency of reporting demographic information. Another commenter suggested that any model form should include an explanation of why the financial institution is requesting the information and a statement of the applicant's right to refuse to provide the information.

One SER asked that, if the Bureau provided sample language for the notice to be provided pursuant to ECOA section 704B(d)(2), that the Bureau provide it in English as well as in other languages, such as Spanish. One SER stated that sample language for a notice should include a statement that underwriter access to demographic information is not detrimental and that such access is necessary due to the small size of the lender.

The SBREFA Panel recommended that the Bureau consider creating sample data collection forms that, to the extent possible, simply and clearly explain the information being requested for purposes of the minority-owned business data point, the women-owned business data point, and the principal owners' ethnicity, race, and sex data point. It also said that the Bureau should additionally consider providing these sample data collection forms in other languages, such as Spanish.[764] The Panel also recommended that the Bureau consider developing sample disclosure language that financial institutions could use to provide some context as to why applicants are being asked to provide demographic information, in order to encourage applicants to respond.[765]

Proposed Rule

Consistent with the SBREFA Panel's recommendation, the Bureau is proposing a sample data collection form that financial institutions could use to collect minority-owned business status, women-owned business status, and principal owners' ethnicity, race, and sex. As suggested in the feedback from SERs, the proposed sample data collection form would be similar to the HMDA data collection form and would include a notice of the applicant's right to refuse to provide the information as well as an explanation of why the financial institution is requesting the information. The sample data collection form would also include the definitions of minority individual, minority-owned business, principal owner, and women-owned business as they would be defined in proposed § 1002.102(*l*), (m), (o), and (s), respectively. Although the Bureau is not currently proposing a sample data collection form in Spanish or any language other than English, the Bureau requests comment on whether a sample data collection form in Spanish or in another language other than English would be useful to financial institutions in the context of their 1071 obligations.

Additionally, to aid financial institutions with the collection of the information in proposed § 1002.107(a)(21), the sample data collection form would include a question about the applicant's number of principal owners.

Finally, consistent with the SBREFA Panel's recommendation, the Bureau is proposing that the sample data collection form would include language that a financial institution could use to satisfy the notice requirement under ECOA section 704B(d)(2) if it determines that one or more employees or officers should have access to the applicant's protected demographic information pursuant to proposed § 1002.108(b)(2).

The Bureau is proposing appendix E pursuant to its authority under ECOA section 704B(g)(1) to prescribe such rules and issue such guidance as may be necessary to carry out, enforce, and compile data pursuant to section 1071, in order to facilitate compliance with the statutory requirements to collect minority-owned and women-owned business status, and the ethnicity, race, and sex of principal owners pursuant to 704B(b)(1) and (e)(2)(G). Further, the Bureau is proposing appendix E pursuant to its obligation in 704B(g)(3) to issue guidance to facilitate compliance with the requirements of section 1071, including assisting financial institutions in working with applicants to determine whether the applicants are women-owned or minority-owned businesses.

The Bureau seeks comment on the proposed sample data collection form, including the proposed language for the notice under ECOA section 704B(d)(2). The Bureau generally requests comment on whether additional clarification regarding any aspect of the sample data collection form or the related notice provided pursuant to 704B(d)(2) is needed. The Bureau also seeks comment on whether the sample data collection form should identify the Bureau to applicants as a potential resource in connection with their applicable legal rights or for additional information about the data collection, including concerns regarding non-compliance. In addition, the Bureau seeks comment on whether financial institutions need additional information on how to adapt this form for use in digital modes of data collection, and, if so, what specific information would be most useful.

Appendix F to Part 1002—Instructions for Collecting and Reporting Small Business Applicants' Minority-Owned and Women-Owned Business Status Under Subpart B

ECOA section 704B(b) requires financial institutions to inquire whether applicants for credit are women-owned businesses, minority-owned businesses, or small businesses and to maintain a record of the responses to that inquiry separate from the applications and accompanying information. However, section 1071 does not include specific instructions on how a financial institution should collect or report such information.

The Bureau is proposing appendix F to provide instructions to aid financial

[761] SBREFA Outline at 32.

[762] *Id.* at 19.

[763] *Id.* at 38.

[764] SBREFA Panel Report at 45–46.

[765] *Id.* at 43, 47.

institutions when collecting minority-owned business status pursuant to proposed § 1002.107(a)(18) and women-owned business status pursuant to proposed § 1002.107(a)(19).

The Bureau is proposing appendix F pursuant to its authority under ECOA section 704B(g)(1) to prescribe such rules and issue such guidance as may be necessary to carry out, enforce, and compile data pursuant to section 1071, in order to facilitate compliance with the statutory requirements to collect minority-owned and women-owned business status pursuant to 704B(b)(1). Further, the Bureau is proposing appendix F pursuant to its obligation in 704B(g)(3) to issue guidance to facilitate compliance with the requirements of section 1071, including assisting financial institutions in working with applicants to determine whether the applicants are women-owned or minority-owned businesses.

The Bureau seeks comment on the proposed instructions, and generally requests comment on whether additional clarification regarding any aspect of the proposed instructions is needed. The Bureau further requests comment on whether additional or different instructions are needed for financial institutions that choose not to use a paper data collection form to collect minority-owned business status or women-owned business status, such as collecting such information using a web-based or other electronic data collection form, or over the telephone. The Bureau also seeks comment regarding the challenges faced by both applicants and financial institutions by the data collection instructions prescribed in appendix F and specifically requests comment on ways to improve the data collection of minority-owned business status and women-owned business status.

Appendix G to Part 1002—Instructions for Collecting and Reporting Ethnicity, Race, and Sex of Small Business Applicants' Principal Owners Under Subpart B

ECOA section 704B(e) requires financial institutions to compile, maintain, and report certain information, including the ethnicity, race, and sex of an applicant's principal owners, but does not provide specific instructions on how a financial institution should do so.

The Bureau is proposing appendix G to provide instructions to aid financial institutions when collecting principal owners' ethnicity, race, and sex pursuant to proposed § 1002.107(a)(20). The Bureau is proposing appendix G pursuant to its authority under ECOA section 704B(g)(1) to prescribe such rules and issue such guidance as may be necessary to carry out, enforce, and compile data pursuant to section 1071, to facilitate compliance with the statutory requirements to collect the ethnicity, race, and sex of principal owners pursuant to 704B(e)(2)(G), and pursuant to 704B(g)(3), which directs the Bureau to issue guidance designed to facilitate compliance with the requirements of section 1071.

The Bureau seeks comment on the proposed instructions, and generally requests comment on whether additional clarification regarding any aspect of the proposed instructions is needed. The Bureau further requests comment on whether additional or different instructions are needed for financial institutions that chose not to use a paper data collection form to collect, principal owners' ethnicity, race, and sex, such as collecting such information using a web-based or other electronic data collection form or over the telephone. The Bureau also seeks comment regarding the challenges faced by both applicants and financial institutions by the data collection instructions prescribed in appendix G and specifically requests comment on ways to improve the data collection of principal owners' ethnicity, race, and sex.

Appendix H to Part 1002—Tolerances for Bona Fide Errors in Data Reported Under Subpart B

The Bureau is proposing appendix H, which would set out a Threshold Table, as referred to in proposed § 1002.112(b) and proposed comment 112(b)–1. As these provisions would explain, a financial institution is presumed to maintain procedures reasonably adapted to avoid errors with respect to a given data field if the number of errors found in a random sample of a financial institution's data submission for a given data field do not equal or exceed the threshold in column C of the Threshold Table.

Under the Threshold Table in proposed appendix H, column A would list the size of the financial institution's small business lending application register in ranges of application register counts (*e.g.,* 25 to 50, 51–100, 101–130, etc.). The applicable register count range would then determine both the size of the random sample, under column B, and the applicable error threshold, under column C. The error threshold of column C, as proposed comment 112(b)–1 would explain, identifies the maximum number of errors that a particular data field in a financial institution's small business lending application register may contain such that the financial institution is presumed to maintain procedures reasonably adapted to avoid errors with respect to a given data field. Column D would be illustrative, showing the error threshold as a percentage of the random sample size.

Proposed appendix H would also include examples of how financial institutions would use the Threshold Table.

For the reasons set out in the section-by-section analysis of proposed § 1002.112(b), the Bureau is proposing appendix H pursuant to its authority under ECOA section 704B(g)(1) to prescribe such rules and issue such guidance as may be necessary to carry out, enforce, and compile data pursuant to section 1071, and its authority under 704B(g)(2) to adopt exceptions to any requirement of section 1071 and to exempt any financial institution or class of financial institutions from the requirements section 1071 as the Bureau deems necessary or appropriate to carry out the purposes of section 1071.

The Bureau seeks comment on this proposed appendix H. In particular, the Bureau seeks comment on whether the register count ranges in column A, the random sample sizes in column B, and the error thresholds in column C are appropriate. The Bureau further seeks comment on whether a covered financial institution should be required to correct and resubmit data for a particular data field, if the institution has met or exceeded the thresholds provided in appendix H.

## VI. Public Disclosure of 1071 Data

### *A. Introduction*

Section 1071 of the Dodd-Frank Act amended ECOA to require financial institutions to collect and report to the Bureau data about applications for credit for women-owned, minority-owned, and small businesses, and for those data to be subsequently disclosed to the public.[766]

[766] *See* ECOA section 704B(e)(1), (f)(2) (detailing requirements for compilation, maintenance, and publication of information).

The Bureau is proposing that financial institutions not compile, maintain, or submit any name, specific address, telephone number, email address or any personally identifiable information concerning any individual who is, or is connected with, an applicant, other than as would be required pursuant to proposed § 1002.107. Nonetheless, publication of the data fields proposed in § 1002.107(a) in an unedited, application-level format could potentially affect the privacy interests and lead to the re-identification of, and risk of harm to, small businesses, related natural persons, and financial institutions.

Section 1071 states that the Bureau may, ''at its discretion, delete or modify data collected under [section 1071] which is or will be available to the public, if the Bureau determines that the deletion or modification of the data would advance a privacy interest.'' [767] For the reasons discussed below, the Bureau is proposing to adopt a balancing test as the method by which it would implement its ''discretion'' to delete or modify data before making the data available to the public.

However, the Bureau does not yet have any data under section 1071 and the Bureau does not believe that there are any comparable datasets that it could use as an adequate proxy for 1071 data to which it could apply the balancing test at this time. The Bureau is thus setting forth herein a partial analysis under the balancing test, for public comment. With several exceptions, discussed in part VI.C.6 below, the Bureau is not at this time proposing specific modifications or deletions for the public application-level 1071 data. After the Bureau receives at least one full year of 1071 data from financial institutions following the compliance date of the final rule, the Bureau intends to issue a policy statement (informed by comments received on the partial analysis in this proposal), in which the Bureau would set forth its intended modifications and deletions.

*B. Background*

1. SBREFA Outline

In the SBREFA Outline, the Bureau stated it was considering proposing to use a balancing test for purposes of deciding how to exercise its discretion to modify or delete data prior to publication.[768] The Bureau explained that data would be modified or deleted if disclosure of the data in unmodified form would pose risks to privacy interests that are not justified by the benefits of public disclosure in light of the statutory purposes of section 1071. If the risks of disclosing unmodified data are not justified by the benefits under the balancing test, the Bureau explained it would determine whether modifications could appropriately diminish the risks. The Bureau further explained that it was considering proposing to apply this balancing test to the privacy interests of non-natural persons (*e.g.,* small business applicants or financial institutions), with respect to protecting sensitive commercial information, as well as the privacy interests of natural persons (*e.g.,* principal owners), with respect to protecting personal information.

As an alternative to a balancing test, the Bureau had considered an approach in which it would modify data prior to publication if an identified privacy risk crosses some significance threshold, without assessing that risk against the benefit of disclosure. The Bureau explained that such an approach, however, could be inconsistent with the express disclosure purposes of the statute.

2. SBREFA Feedback

The Bureau received feedback on its privacy proposals under consideration from SERs and other commenters; [769] the SBREFA Panel also made recommendations regarding privacy. Comments related to the design and implementation of the balancing test itself are described immediately below. Comments addressing general issues related to benefits, privacy risks, and potential modifications of data fields are described further below in part VI.C. Comments addressing the benefits of specific data fields the Bureau considered as part of the SBREFA process are discussed in the section-by-section analysis of proposed § 1002.107(a), in part V above. Comments addressing the privacy risks and potential modifications of specific data fields are discussed below in part VI.C.

With respect to the balancing test itself, several SERs expressed the view that it would be difficult to balance transparency and fairness in the marketplace with privacy interests. A SER and another industry commenter suggested that the balancing test described in the SBREFA Outline would not adequately protect privacy interests because it appeared to be subjective, dependent on the limitations of agency expertise, and subject to change. A community group commenter maintained that financial institution privacy did not appear to have been a concern for Congress in section 1071.

One industry commenter recommended that the Bureau consider the alternative approach of not balancing privacy risks against the benefits of disclosure because of the heightened privacy risks in the small business market (relative to consumer privacy risks), particularly in geographies where re-identification risk is higher. Another industry commenter expressed the view that excluding community banks from collection and reporting would provide a more straightforward approach to protecting privacy. On the other hand, a community group maintained that the benefits of public disclosure would always justify any alleged privacy risks.

Commenters also addressed information security concerns and potential conflicts with other privacy laws. Two SERs raised concerns that the transmission of 1071 data to the Bureau could give rise to the risk of a data security breach involving personally identifiable information or information that would directly identify a small business. One SER requested that financial institutions be held harmless if there were a data security breach for which the Bureau was responsible. Another industry commenter expressed the concern that some applicants would be hesitant to provide information in light of data security concerns. Another requested that the Bureau describe and seek comment on its data security safeguards.

Commenters also addressed procedural issues surrounding the implementation of the Bureau's privacy analysis. Several industry commenters requested that the Bureau not bifurcate the analysis of privacy issues into a separate notice-and-comment rulemaking, which was the approach the Bureau took with respect to data fields reported under the 2015 HMDA Final Rule. One commenter stated that a full explanation of the balancing test design and its application would help financial institutions consider potential reputational risks associated with data disclosure. One industry stakeholder stated that the Bureau should take what the stakeholder described as a transparent approach to decisions about public disclosure. Another stakeholder stated that if privacy issues are raised after implementation of a rulemaking, the Bureau should, as the stakeholder described, promptly limit publication of data that might be released to the

[767] ECOA section 704B(e)(4).

[768] *See* SBREFA Outline at 40–41.

[769] The SER feedback discussed in this section-by-section analysis can be found in the SBREFA Panel Report at 34–36.

public. Other industry commenters maintained that decisions about modifications or deletions to protect privacy should be published following notice-and-comment rulemaking, rather than by policy statement.

The SBREFA Panel recommended that the Bureau offer more detail in the proposal on the balancing test and its application to the 1071 data fields.[770] The Panel also recommended that the Bureau seek comment on how it should design and implement the balancing test. In addition, the Panel recommended that the Bureau seek comment on the range of privacy concerns articulated by SERs, including potential re-identification of small businesses and financial institutions, as well as the types of harms and sensitivities the unmodified release of 1071 data could cause to financial institutions and small business applicants.[771] Finally, the Panel recommended that the Bureau seek comment on the potential benefits of publishing unmodified 1071 data.[772]

*C. Design, Implementation, and Application of Balancing Test*

In light of the feedback from SERs and other stakeholders, and for the reasons below, the Bureau is proposing to adopt a balancing test, consistent with the test described in the SBREFA Outline. As recommended by the SBREFA Panel, the Bureau is providing additional detail on the balancing test and how it would be applied to the proposed 1071 data points; this analysis is in *Preliminary Application of the Balancing Test* in part VI.C.6 below. As discussed under *Implementation of the Balancing Test* in part VI.C.2 below, however, the Bureau is not proposing specific modifications or deletions for most of the proposed data fields because data required for a statistical analysis of re-identification risk are not yet available.

1. Balancing Test Design

Under ECOA section 704B(e)(4), the Bureau ''may, at its discretion, delete or modify data collected under this section which is or will be available to the public, if the Bureau determines that the deletion or modification of the data would advance a privacy interest.'' [773] Congress thus provided the Bureau with broad discretion to modify or delete data prior to public disclosure to advance privacy interests. The Bureau continues to believe that a balancing test is a reasonable approach for exercising this discretion and would effectuate the purposes of section 1071 better than the alternative approaches discussed in the SBREFA Outline and recommended by some commenters. As recognized by commenters, exercising this discretion inherently requires that the Bureau reconcile competing policy interests. A balancing test approach would help the Bureau consider the privacy risks and benefits of disclosing data fields, tailor modifications or deletions of data narrowly to appropriately balance privacy risks and benefits in the published data, and establish a decision framework that is responsive to a broad set of stakeholder concerns that might evolve over time. The Bureau intends to engage with stakeholders, including through this proposal, to supplement its own expertise in evaluating privacy interests for these purposes.

Alternative approaches recommended by stakeholders are summarized in part VI.B.2 above. The Bureau is not proposing approaches that do not consider the benefits of public disclosure because it is concerned they would result in outcomes inconsistent with the statutory purposes. For example, deleting all application-level data from public release and instead publishing aggregate data would advance privacy interests but would substantially undermine the public disclosure purposes of the statute.

The Bureau also considered the suggestion that it exercise its discretion to modify or delete application-level data prior to publication by exempting classes of financial institutions from public disclosure. While this would address the privacy interests of those financial institutions and their customers that might arise in certain markets, this approach would be too narrow because privacy concerns that arise for these persons may also arise for others, such as small businesses and natural persons in other markets. The Bureau is not proposing an approach that assumes the benefits of disclosure will always justify risks to privacy interests. The commenter recommending this approach did not provide a basis for such a conclusion with respect to individual data fields, or the dataset as a whole.

With respect to the comment that the Bureau not consider the privacy interests of financial institutions, section 1071 generally provides that the Bureau may delete or modify data if it determines that doing so ''would advance a privacy interest.'' [774] The statute does not define the term ''privacy interest,'' however, and the Bureau believes it can reasonably be interpreted broadly, for purposes of section 1071, to include interests of non-natural persons with respect to certain commercial information.

Whether a non-natural person has cognizable ''privacy interests'' under the Constitution or common law is not a settled legal question across all areas of the law. Common law recognizes that businesses have an interest in protecting sensitive commercial information, similar to the privacy interests enjoyed by natural persons.[775] Although the courts have typically described these interests as property interests, cases sometimes describe these types of interests as privacy interests.[776] Some circuits have held that non-natural persons have constitutionally protected privacy interests,[777] while other circuits have rejected this notion.[778] The Supreme Court has held that corporations do not have privacy rights on par with natural persons,[779] and that corporations do not have ''personal'' privacy interests;[780] however, it has not directly addressed the issue of whether a non-natural person has a cognizable ''privacy interest.'' The Bureau also understands that the interests of many small businesses may be closely tied to the privacy interests of natural persons.[781]

[770] *See* SBREFA Panel Report at 47–48.

[771] *See id.*

[772] *See id.*

[773] ECOA section 704B(e)(4).

[774] *See* ECOA section 704B(a) (statutory purposes), (e)(4) (deletion or modification authority), (f)(1) (reporting requirement), (f)(2)(C) (publication requirement).

[775] *See, e.g., Carpenter* v. *United States,* 484 U.S. 19, 26 (1987) (''Confidential information acquired or compiled by a corporation in the course and conduct of its business is a species of property to which the corporation has the exclusive right and benefit . . . .'') (citation omitted).

[776] *See, e.g., Kewanee Oil Co.* v. *Bicron Corp.,* 416 U.S. 470, 487 (1974) (''A most fundamental human right, that of privacy, is threatened when industrial espionage is condoned or is made profitable.''); *E.I. duPont deNemours & Co.* v. *Christopher,* 431 F.2d 1012, 1016 (5th Cir. 1970) (''Commercial privacy must be protected from espionage which could not have been reasonably anticipated or prevented.'').

[777] *See, e.g., Tavoulareas* v. *Wash. Post Co.,* 724 F.2d 1010, 1023 (D.C. Cir. 1984), *vacated on other grounds,* 737 F.2d 1170 (D.C. Cir. 1984).

[778] *See, e.g., Fleck & Assocs., Inc.* v. *City of Phoenix,* 471 F.3d 1100, 1105 (9th Cir. 2006).

[779] *United States* v. *Morton Salt Co.,* 338 U.S. 632, 652 (1950) (''[C]orporations can claim no equality with individuals in the enjoyment of a right to privacy.'').

[780] *FCC* v. *AT&T, Inc.,* 562 U.S. 397, 402–407 (2011). In *FCC,* the Court held that corporations lack ''personal privacy'' interests under FOIA Exemption 6, which uses the term ''personal privacy.'' The Court's opinion was based on the word ''personal'' and limited to the notion of ''personal privacy.'' The Court stated that it was not addressing the scope of a non-natural person's ''privacy interests'' generally under constitutional or common law. *Id.* at 407 (''[T]his case does not call upon us to pass on the scope of a corporation's 'privacy' interests as a matter of constitutional or common law.'').

[781] *See, e.g., Providence J. Co.* v. *FBI,* 460 F. Supp. 778, 785 (D.R.I. 1978) (''While corporations have no

The Bureau believes it is appropriate to consider the privacy interests of non-natural persons under the 1071 balancing test. The proposed 1071 data points would reveal information about non-natural persons—including small businesses and financial institutions—and Congress did not expressly limit the privacy interests the Bureau may consider to those of natural persons. Nor did Congress expressly limit the privacy interests the Bureau may consider to those of applicants or borrowers, as it did in HMDA.[782] Further, courts have recognized that non-natural persons have privacy interests in certain contexts. The Bureau seeks comment on its interpretation of ''privacy interests'' under section 1071 and its proposal to consider the privacy interests of both financial institutions and non-natural person applicants.

Several commenters raised concerns about the information security implications of reporting data to the Bureau. While the Bureau's information security procedures are outside the scope of this rulemaking, the Bureau takes strong measures to mitigate and address any risks to the security of sensitive data it receives, consistent with the guidance and standards set for Federal information security programs, and is committed to protecting the privacy and information security of the 1071 data it receives from financial institutions. In addition, the Bureau does not believe a financial institution could be held legally liable for the exposure of data due to a breach at a government agency or for reporting data to a government agency if the institution was legally required to provide the data to the agency and did so in accordance with other applicable law.

The Bureau acknowledges the concern raised by some SERs and other stakeholders that some applicants might be hesitant to provide information in light of data security concerns. However, the Bureau does not believe that such concerns will broadly discourage applicants from seeking credit from financial institutions that are responsible for reporting data to the Bureau.

For the reasons described above, the Bureau proposes to use a balancing test to exercise its discretion under ECOA section 704B(e)(4) to delete or modify data collected under section 1071 which is or would be available to the public where the Bureau determines that the deletion or modification of the data would advance a privacy interest. Specifically, the Bureau proposes to modify or, as appropriate, delete data fields from the public application-level 1071 data where the release of the unmodified data would create risks to the privacy interests of applicants, related natural persons, or financial institutions that would not be justified by the benefits of such release to the public in light of the statutory purposes of section 1071. In such circumstances, the need to protect the privacy interests of applicants, related natural persons, or financial institutions would require that individual data fields be modified or, as appropriate, deleted. Considering the public disclosure of 1071 data as a whole, the privacy interests of applicants, related natural persons, or financial institutions would arise under the balancing test only where the disclosure of 1071 data may both substantially facilitate the re-identification of an applicant or related natural person, in the data and disclose information about such persons, or the identified financial institution, that is not otherwise public and may be harmful or sensitive. Thus, disclosure of an unmodified individual data field may create a risk to privacy interests if such disclosure either would substantially facilitate the re-identification of an applicant or related natural person; or would disclose information about applicants or related natural persons, or an identified financial institution, that is not otherwise public and that may be harmful or sensitive.[783] This interpretation implements ECOA section 704(e)(4).

Where the publication of unmodified application-level 1071 data may create risks to privacy, the proposed balancing test would require that the Bureau consider the benefits of disclosure in light of section 1071's purposes and, where these benefits do not justify the privacy risks the disclosure would create, modify the public application-level dataset to appropriately balance the privacy risks and disclosure benefits. The Bureau would delete the data field prior to publishing the application-level dataset if other modifications would not appropriately balance the privacy risks and disclosure benefits. An individual data field would be a candidate for modification or deletion under the proposed balancing test if its disclosure in unmodified form would create a risk of re-identification or a risk of harm or sensitivity.

The Bureau's proposed balancing test generally resembles the balancing test adopted in the 2015 HMDA Final Rule,[784] with certain adjustments for the 1071 context. In particular, the Bureau's proposed 1071 balancing test would consider the privacy interests of not just applicants, but also related natural persons who might not be applicants (such as principal owners of a business, where a legal entity is the applicant), as well as the privacy interests of financial institutions reporting 1071 data.

The Bureau's proposed 1071 balancing test would not specifically consider the risks that a financial institution could be identified in the public application-level 1071 data. Section 1071 requires financial institutions to compile and maintain data and provides that such information be made available to the public upon request.[785] Accordingly, section 1071 contemplates that the public would know what application data are associated with particular financial institutions. Because the statute directly contemplates disclosure of a financial institution's identity in connection with the public application-level dataset, the Bureau proposes to disclose financial institution identity; the re-identification risk element of the analysis would not apply to financial institutions. However, the Bureau would consider the risk to a financial institution that the release of 1071 data in unmodified form would disclose information that may be harmful or sensitive to a financial institution.

As recommended by the SBREFA Panel, the Bureau seeks comment on the design of its proposed balancing test. The Bureau also seeks comment on whether the balancing test should apply to the privacy interests of natural persons generally, rather than just those of natural persons related to applicants.

2. Implementation of the Balancing Test

As noted above, the SBREFA Panel and other commenters recommended that the Bureau offer more detail in the proposal on how the Bureau intends to implement and apply its balancing test

privacy, personal financial information is protected, including information about small businesses when the individual and corporation are identical.''), *rev'd on other grounds,* 602 F.2d 1010 (1st Cir. 1979).

[782] For context, the privacy interests that may be considered under HMDA are limited to the interests of ''applicants and mortgagors'' specifically. *See* 12 U.S.C. 2803(h)(1)(E), (h)(3)(B), (j)(2)(B). In contrast, section 1071 simply uses the term ''privacy interest,'' without qualification. *See* ECOA section 704B(e)(4).

[783] The Bureau is aware that ''re-identification'' risk often is used in reference to risks applicable to natural persons and that identification of a small business in the public application-level 1071 data could be characterized as a ''harm'' or ''sensitivity.'' However, for the ease of administrability, the proposed balancing test analyzes risks to both natural persons and small businesses as re-identification risks.

[784] *See* 80 FR 66127, 66133–34 (Oct. 28, 2015).

[785] *See* ECOA section 704B(e), (f)(2)(B).

to the 1071 data fields it is proposing.[786] Several industry commenters requested that the Bureau apply the balancing test directly in the Bureau's 1071 rulemaking, rather than after the Bureau issues a final rule. Because of data limitations discussed below, the Bureau is not proposing a full application of the balancing test to most of the proposed data points. Instead, the Bureau is setting forth and seeking comment on its analysis of the benefits and harms or sensitivities that could arise with respect to individual data fields and the dataset as a whole. The Bureau is not conducting a full analysis of the risks of re-identification; the Bureau is proposing to determine the extent of re-identification risk after it has obtained a full year of reported 1071 data. Accordingly, the Bureau is not proposing specific modifications or deletions for most of the proposed data points, but is instead seeking comment throughout part VI.C.5 and .6 on the types of techniques it is considering.

The Bureau is not applying the proposed balancing test fully to the proposed data fields because the lack of an existing 1071 dataset, or a sufficiently similar dataset, materially limits its ability to analyze re-identification risks. Unlike the balancing test elements of benefits, harms, and sensitivities, the Bureau would analyze the re-identification risk element, in part, using a statistical analysis. Specifically, the Bureau would determine whether a particular combination of data fields in a dataset generates a unique set of records that can be accurately matched to records in another publicly available dataset identifying an applicant or a related natural person.[787] Where certain data fields significantly contribute to re-identification risk, the Bureau can use this type of analysis to determine what modifications can be made to the data fields to reduce re-identification risk—that is, by reducing the number of unique combinations produced by data fields—while maintaining as much data utility as possible.

However, the absence of an existing 1071 dataset or sufficiently similar data significantly impedes the Bureau's ability to preliminarily determine whether a proposed 1071 data field, individually or in combination with others, would substantially facilitate re-identification, or how specifically to modify data to reduce that risk. Because there does not exist a dataset sufficiently similar to what would be published under section 1071, a re-identification analysis of data other than actual reported 1071 data would not provide an accurate basis on which the Bureau could apply the balancing test and modify or delete the data, as appropriate.[788] Underestimating the degree to which a 1071 data field, individually or in combination with others, facilitates re-identification risk could unnecessarily increase privacy risks to an applicant or a related natural person, while overestimating re-identification risk could unnecessarily reduce data utility.

In light of these limitations, the Bureau considered deferring all analysis under the proposed balancing test until after the 1071 rule is finalized. However, the Bureau is concerned that doing so would reduce opportunities for public feedback on privacy issues and their relationship to the general 1071 proposal. Although the Bureau lacks data that would allow it to perform a complete re-identification analysis at this time, it believes there is substantial value in setting forth its preliminary analysis under other aspects of the balancing test. Specifically, the Bureau has preliminarily analyzed the benefits and harms or sensitivities associated with the proposed data fields, the capacity and motives of third parties to match proposed 1071 data fields to other identifiable datasets, and potential modification techniques it may consider to address privacy risks. The Bureau's preliminary analysis of these aspects of the balancing test is set forth below. The Bureau acknowledges that the public will not have an opportunity to comment on the Bureau's intentions with respect to specific modifications or deletions for each proposed data field before a 1071 rule is finalized. However, the Bureau believes this limitation outweighs the risks of basing modifications or deletions on a potentially inaccurate re-identification analysis. And while a number of community groups that provided feedback on the Bureau's SBREFA Outline asserted that privacy risks would be low, they nonetheless recognized the role played by modification techniques. The Bureau agrees that modification techniques could play an important role in reducing privacy risks. The Bureau's ability to design effective modifications, however, requires application-level data that are not currently available.

As noted above, several industry commenters asserted that privacy decisions should be finalized by notice-and-comment rulemaking, rather than by policy statement. The Bureau believes, however, that a policy statement would be an appropriate vehicle for announcing its intentions with respect to modifications and deletions of 1071 data. First, under section 1071, the Bureau may delete or modify data at its discretion, in contrast to other provisions in the statute that require legislative rulemaking.[789] Second, the Bureau's proposed approach with respect to modifications and deletions would not impose compliance obligations on financial institutions; as discussed in the section-by-section analysis of proposed § 1002.110 above, the Bureau is proposing to publish application-level data on its website on behalf of financial institutions.[790]

Nonetheless, in the interest of obtaining public feedback on the qualitative aspects of its balancing test analysis, the Bureau is including a preliminary detailed analysis for each of the proposed data points, described under *Preliminary Application of the Balancing Test* in part VI.C.6 below. After the first year of 1071 data is reported to the Bureau, but before the Bureau releases the first year of 1071 data to the public, it would publish a policy statement setting forth its intentions with respect to modifications and deletions to the public application-level 1071 data. Before publishing that policy statement, the Bureau would conduct a balancing test analysis based on feedback to this proposal as well as a quantitative analysis of re-identification risk using reported 1071 data. At this time, the Bureau does not intend to re-propose its balancing test analysis for public comment prior to issuing the policy statement, in the interest of making data publicly available in a timely manner.

While the Bureau is seeking public feedback on its analysis below, preserving the ability to exercise its

[786] *See* SBREFA Panel Report at 47.

[787] For purposes of this discussion of the proposed balancing test analysis, the term ''unique'' can refer to a combination of values for a particular record or a combination of values shared by a few records.

[788] The Bureau considered whether it could analyze re-identification risk using data released under the SBA's Paycheck Protection Program (PPP) and U.S. Census data. However, estimating re-identification risk—and making modification and deletion decisions designed to reduce re-identification risk—based on existing public data sources would be substantively limited. First, the more limited scope of the PPP and Census data makes it difficult to accurately estimate the re-identification risk associated with all of the data points in the eventual 1071 data. Second, a re-identification analysis using existing PPP and Census datasets would not cover the same sets of small businesses that will appear in the 1071 data.

[789] *Compare* ECOA section 704B(e)(4), *with* ECOA section 704B(f)(2).

[790] Section 1071 requires financial institutions to compile and maintain data and provides that such information be made available to the public upon request. *See* ECOA section 704B(e), (f)(2)(B).

discretion to modify or delete data through policy statements allows the Bureau to manage the relationship between privacy risks and benefits of disclosure more actively. The Bureau believes this flexibility may be especially important in the event the Bureau becomes aware of developments that might contribute to privacy risks. The privacy landscape is constantly evolving, and risks to applicant privacy created by the publication of the application-level 1071 data may change as the result of technological advances and other external developments. For example, a new source of publicly available records may become accessible, increasing or decreasing privacy risks under the balancing test, or the Bureau may discover evidence suggesting that third parties are using the 1071 data in unforeseen, potentially harmful ways. Potential uses of the application-level 1071 data in furtherance of the statute's purposes may also evolve, such that the benefits associated with the disclosure of certain data may increase to an extent that justifies providing more information to the public in less modified form. As recommended by the SBREFA Panel, the Bureau seeks comment on its approach described above for implementing the balancing test.[791]

3. Disclosure Benefits

In the SBREFA Outline, the Bureau explained that, under the balancing test it was considering, data would be modified or deleted if disclosure in unmodified form would pose risks to privacy interests that are not justified by the benefits of public disclosure in light of the statutory purposes of section 1071.[792] The Bureau sought feedback on the data points generally, as well as the benefits of public disclosure to financial institutions for each of the data points under consideration.[793] Feedback on the benefits of public disclosure of the data points under consideration during the SBREFA process is described in the applicable section-by-section analysis of proposed § 1002.107(a)(1) through (21) in part V above. Feedback on the benefits of public disclosure of the 1071 dataset as a whole is described below.

Under the proposed balancing test, the Bureau would consider the benefits of disclosure of the application-level 1071 data to the public in light of the statutory purposes of section 1071. As described above, the 1071 data would be the most comprehensive dataset available to analyze trends within the U.S. small business lending industry. The Bureau expects that users of 1071 data would rely on this information to help achieve the statutory purposes of section 1071: (1) Facilitating the enforcement of fair lending laws; and (2) enabling communities, governmental entities, and creditors to identify business and community development needs and opportunities of women-owned, minority-owned, and small businesses.[794] This would make 1071 data the foremost data source that governmental entities, researchers, economists, industry, and community groups rely on to achieve 1071's purposes and to analyze the small business lending market. The Bureau received feedback provided by SERs, other commenters, and the SBREFA Panel on the potential benefits of disclosure. Comments related to the overall benefits of data disclosure, the fair lending benefits, and business and community development benefits are described below.

Some SERs and industry stakeholders generally supported the public disclosure of 1071 data to promote the monitoring of equal access to credit for small businesses, and narrowing the information gap between lenders and borrowers, community groups, and public officials. A number of SERs expressed the view that data transparency in the small business lending market is critical to advance the goals of fair lending enforcement and access to credit for small businesses, especially those that are minority-owned and women-owned. One SER stated that the data currently available are limited, and that section 1071 has the opportunity to address lending disparities. The SER also explained that data transparency and fairness could address lending practices that tend to exclude women-owned and minority-owned businesses, exacerbating a racial wealth gap. An industry stakeholder supported the public disclosure of 1071 data to promote the monitoring of equal access to credit for women- and minority-owned businesses.

Several SERs also underscored the importance of public disclosure of 1071 data in furthering the 1071 rule's business and community development purpose. One SER stated that the 1071 rule could be a model for the marketplace and pro-innovation if implemented with checks and balances. Another SER said that more transparency would help governments and creditors understand what strategies are successful in reaching women-owned and minority-owned small businesses and shed light on the marketplace and pricing overall.[795] Other SERs emphasized the importance of publishing pricing information (specifically captured as APR), together with product type for understanding the cost and availability of financing products to small businesses, the importance of NAICS codes or other industry information for determining which industries are getting funding generally, and the importance of census tract or other geographic information for understanding the extent of lending to small businesses in low-to-moderate income neighborhoods.[796]

However, several industry commenters expressed the belief that there were no, or few, benefits to publishing 1071 data in general, in addition to raising general concerns about privacy risks, discussed under *Risks to Privacy Interests* in part VI.C.4 below. Several commenters maintained that the benefits of public disclosure would be limited due to concerns about the data points the Bureau was considering and the absence of other data points that could, in the view of these commenters, reduce the risk of misinterpretation of the data. SERs and industry commenters also questioned the benefits associated with individual data points, as described in the applicable section-by-section analysis of proposed § 1002.107(a)(1) through (21) in part V above.

Community group commenters supported public disclosure of 1071 data. One commenter expressed the view that robust data collection would allow the public to gain a much greater understanding of gaps in lending to borrowers in the marketplace, and easily identify unmet borrowing needs. The commenter explained that the 1071 dataset would cover more types of loans from more institutions than existing CRA data (which had been used for similar kinds of analyses in the past), potentially giving the Bureau a comprehensive view of the small business lending market. The commenter also explained that data collection under the proposal would build an understanding of the credit needs and financing outcomes of small businesses in the lending marketplace through information from data fields such as amount applied for, action taken, and amount approved or originated. Additionally, several community group commenters asserted that transparency through public disclosure would benefit responsible financial institutions by allowing them

[791] *See* SBREFA Panel Report at 24, 33, 48.

[792] *See* SBREFA Outline at 40–41.

[793] *See id.*

[794] *See* ECOA section 704B(a).

[795] *See* SBREFA Panel Report at 36.

[796] *See id.*

to distinguish themselves from others and providing a means for discovering and addressing problematic practices earlier.

The Bureau has considered these comments and the ways in which public disclosure of the proposed 1071 data fields would facilitate the enforcement of fair lending laws. Market transparency through publication of the application-level 1071 data would help to identify potential fair lending violations and address discrimination in small business lending. For example, the ability to compare pricing is a central outcome in many fair lending analyses, which often aim to determine if similarly situated applicants face higher prices due to a prohibited basis under ECOA, such as ethnicity, race, and sex. In supporting the inclusion of pricing as a discretionary data point, one community group explained that collecting data on price would facilitate enforcement of fair lending laws by identifying discrimination in lending through information on whether an application was approved and at what price. The 1071 data would also be used by public officials, researchers, and community groups to identify potentially discriminatory lending patterns and to enforce anti-discrimination statutes. For example, data on action taken would be used in fair lending analyses to identify potential disparities in denial rates among similarly situated applicants. Additionally, public disclosure of the 1071 data fields would enable data users to advocate that financial institutions maintain robust fair lending policies and practices and could also increase the prospect of self-correction when financial institutions conduct their own analyses to assess potential fair lending risks. At the same time, greater transparency could provide explanatory context for lending decisions, which may help protect responsible lenders from inaccurate assumptions based on more limited public data.

Moreover, data users, such as community groups, researchers, and public officials, would be able to use 1071 data to help determine whether certain types of credit are disproportionately available to different groups. For example, one community group commenter explained that because credit cards and other types of high-interest credit are widely used by small businesses, information on the types of credit applied for or originated could reveal the extent to which women-owned or minority-owned small businesses can access term loans or are served disproportionately by credit cards or other small business credit products that generally carry higher interest rates. The same commenter also explained that data users may be able to use the 1071 data to investigate whether certain products or businesses are disproportionately supported by government guarantee programs in business and community development and possibly help to develop more targeted programs.

The Bureau has also considered the ways in which publication of the application-level 1071 data would promote the business and community development purpose of 1071. The Bureau believes that the public application-level 1071 data would provide useful and robust data, allowing data users to appropriately and efficiently focus resources on particular areas of need. For example, reporting of information about rates of denial, and the associated reasons for denial of a business credit application, combined with data fields commonly used to help make underwriting decisions, such as gross annual revenue and time in business, would improve the public's ability to generally understand financial institutions' decision-making and to identify underserved areas of the market. The Bureau also believes that the public application-level 1071 data could yield information helpful in understanding the economic health of communities. NAICS codes, for example, could provide information about rates at which particular types of businesses are applying for and receiving credit in general, and which types of lending products are being requested, when combined with credit type. This information would also allow data users to identify trends in the small business market that could provide evidence as to the health of the overall economy. Understanding these potential indicators would also help public officials focus efforts to help creditors serve the lending needs of communities and give government officials information to efficiently distribute resources to vulnerable small business applicants. Finally, pricing information, such as total origination charges for different types of credit, would also allow data users to better understand pricing decisions and the cost of credit to small businesses. Information about credit purpose would allow data users to better understand why small businesses are using credit, thus helping communities determine whether creditors are serving the small business lending needs of their communities and also helping public officials to target public investment to better attract private investment and innovation. As recommended by the SBREFA Panel, the Bureau seeks comment on its understanding of the benefits of public disclosure of the 1071 data described above.[797]

4. Risks to Privacy Interests

The Bureau has considered the risks to privacy that may be created by the public disclosure of the 1071 data that would be reported to the Bureau under the proposal. Based on its analysis to date, the Bureau believes that public disclosure of the unmodified application-level dataset, as a whole, might create risks to privacy interests under the 1071 balancing test. As described in more detail below, this is due to the presence of unique data fields in the dataset that the Bureau believes could create re-identification risk and the presence of individual data fields that the Bureau believes would create a risk of harm or sensitivity. Accordingly, the Bureau intends to consider whether modifications or deletions to the public application-level 1071 data would reduce these risks to privacy and appropriately balance them with the benefits of disclosure for section 1071's purposes.

As recommended by the SBREFA Panel, the Bureau seeks comment on the range of privacy concerns articulated by SERs, including potential re-identification of small businesses and financial institutions, as well as the types of harms and sensitivities the unmodified release of 1071 data could cause to financial institutions and small business applicants, which are described further below.[798]

i. Re-Identification Risk

In the Bureau's SBREFA Outline, the Bureau explained that, while information that directly identifies natural persons, such as name, address, date of birth, or Social Security number would not be collected pursuant to section 1071 requirements, publication of 1071 data under consideration in an unmodified, application-level format potentially could be used to re-identify small business applicants and related natural persons or potentially harm their privacy interests.[799] One SER stated that there has not been a single demonstrated incident of re-identification using HMDA data, and that privacy concerns could be addressed through modification techniques. However, many SERs and several industry stakeholders explained that 1071 data would facilitate the re-

[797] *See id.* at 48.

[798] *See id.* at 47.

[799] *See* SBREFA Outline at 40.

identification of natural persons and businesses, particularly in low-density geographies, like rural areas. Some stakeholders stated that it would be difficult to predict whether re-identification could arise, particularly as technology evolves.

The Bureau is concerned about two re-identification scenarios. First, a third party may use common data fields to match a 1071 record to a record in another dataset that contains the identity of the applicant or related natural person. The Bureau uses the term ''adversary'' when referring to such third parties.[800] Second, an adversary may rely on pre-existing personal knowledge to recognize an applicant's record in the unmodified 1071 data.

*Re-identification based on matching.* Under the first scenario, it may be possible to match a 1071 record to an identified dataset, either directly or through a combination of intermediate datasets.[801] The 1071 data that would be reported under the proposal, like the data reported under HMDA and Regulation C, may contain data fields that create re-identification risk.[802] However, successfully re-identifying a 1071 record would require several steps and may present a significant challenge.

First, an adversary generally would have to isolate a record that is unique within the 1071 data. A 1071 record is unique when the values of the data fields associated with it are shared by zero or few other 1071 records. As discussed above, the Bureau believes actual 1071 data are needed to perform an accurate re-identification analysis. Thus, the Bureau does not intend to apply the balancing test until after it has analyzed re-identification risk with at least a full year of reported 1071 data.

A 1071 record having unique combinations of values would not automatically result in its re-identification; an adversary would also have to find a record corresponding to the applicant or related natural person in another dataset by matching similar combinations of data fields. Once a 1071 record has been matched to a corresponding record, an adversary would possess any additional fields found in the corresponding record but not found in the 1071 record, such as, possibly, the identity of the applicant. However, even after accomplishing such a match, an adversary might not have accurately re-identified the true applicant to whom the 1071 record relates. For example, if the corresponding record is not the only record in the other dataset that shares certain data fields with the unique 1071 record, an adversary would have to make a probabilistic determination as to which corresponding record belongs to the applicant.

As described below and addressed with respect to individual data fields in part VI.C.6 further below, the Bureau expects that the census tract and NAICS code data fields may significantly contribute to re-identification risk. Geographic and industry information are publicly available in a variety of sources and in a form that directly identifies businesses or in a way that could be derived with reasonable accuracy. This information is also likely to produce unique instances in the data, both when used separately and also, especially, when combined. Other data fields may result in unique combinations (particularly when combined with census tract), but the Bureau would need actual 1071 data to analyze their contribution to uniqueness.

In the 1071 context, the Bureau believes that particularly relevant sources of identified data for matching purposes are UCC filings, property records, and titles. The Bureau believes that such filings could pose a serious re-identification risk because of the availability of information about the lender, the applicant, and the date of transaction. The proposed 1071 data fields in unmodified form would identify the financial institution as well as the action taken date or application date. If the action taken date is on or near the UCC filing date, for example, an adversary might be able to use the date and financial institution on the UCC filings to identify the applicants of originated loans in the public application-level 1071 data. The UCC filing also typically will have the address of the borrower. Combinations of lender, action taken date, and census tract might result in unique combinations of data fields that an adversary could connect to a publicly available source of information to re-identify the applicant. Therefore, the Bureau believes identity of the financial institution and the action taken date (and application date, which could be a proxy for action taken date) may significantly contribute to re-identification risk. UCC filings may also, although to a lesser extent, contain detailed information on the type of loan and the amount approved.

With respect to 1071 loans secured by residential and commercial property, publicly available real estate transaction records and property tax records would be particularly relevant sources of identified data, as the Bureau described in its proposed policy guidance on the disclosure of loan-level HMDA data.[803] Because some of the data fields in such public records are also present in the 1071 data, the Bureau believes that the publication of application-level 1071 data without any modifications would create a risk that these public records could be directly matched to a 1071 record to re-identify an applicant. In addition, a business's own website, public directories, or websites that review businesses typically include the business's location, time in business, and information that could be used to derive information about the business's owners.

UCC filings also frequently include the name of the lender, the name of the business, and the date that the filing was submitted. Though the availability differs by State, UCC filings are often searchable in State databases, and are a source of data frequently mined by data brokers. UCC statements are often filed against specific collateral and business assets generally, especially for products like general lines of credit. These types of filings would be available more broadly than just for loans with very specific collateral (like equipment or vehicles). Such filings could pose a serious re-identification risk because of the availability of information about the lender, the applicant, and the date of transaction.

Identified public data records in loan-level datasets for programs like the SBA's 7(a), 8(a), 504, and PPP programs, as well as State-level registries of women-owned and minority-owned businesses for contracting purposes, may also contribute to re-identification risk. These datasets include information such as loan program guarantee information, industry or NAICS code, demographic information about the business owners, time in business, and

[800] The term is not intended to indicate that the adversary's motives are necessarily malicious or adverse to the interests of others. *See, e.g.,* Nat'l Inst. of Standards & Tech., *De-Identification of Personal Information* (2015), *http://nvlpubs.nist.gov/nistpubs/ir/2015/NIST.IR.8053.pdf* (using the term ''adversary'').

[801] For purposes of this discussion, an identified dataset is one that directly identifies a natural or non-natural person.

[802] HMDA data have a large number of records with unique combinations of data fields. *See* 84 FR 649, 654 n.33 (Jan. 31, 2019) (citing a 2005 Board study finding that more than 90 percent of the loan records in a given year's HMDA data are unique—that is, an individual lender reported only one loan in a given census tract for a specific loan amount).

[803] *See* 82 FR 44586, 44593 (Sept. 25, 2017). The Bureau explained that, although there is variance by jurisdiction, such records are often available electronically and typically identify a borrower through documents such as the mortgage or deed of trust. These documents typically include the loan amount, the financial institution, the borrower's name, and the property address, and may include other information.

number of workers. Time in business and number of workers could also likely significantly contribute to re-identification risk, especially in combination with other data fields like census tract and NAICS code.

Other publicly available sources of data similar to those included in the proposed 1071 data, but only for certain types of credit, include loan-level performance datasets made available by the Government-Sponsored Enterprises (GSEs). The GSE datasets include information such as borrower demographic information, loan program guarantee information, pricing data, loan term, loan purpose, and the year of action taken. Asset-backed securities datasets for securitized mortgage and auto loans are made available by the Securities and Exchange Commission through the Electronic Data Gathering, Analysis, and Retrieval (EDGAR) system. These datasets include information about the lender, the date of action taken, pricing data, loan term, loan amount applied for and approved. These datasets are available online with limited restrictions on access. But these datasets do not include the name of the borrower; as described above, this means that an adversary who is able to match a record in one of these datasets to a record in the 1071 data would need to make an additional match to an identified dataset to re-identify an applicant. And some of these datasets contain restrictions on use, such as a prohibition on attempting to re-identify borrowers.

Private datasets, which could be made available in identified or de-identified form, that could be matched to the 1071 data are also available. For example, data brokers collect information about small businesses from a wide range of sources and sell it for a variety of purposes, including marketing, identity verification, and fraud detection.[804] These datasets typically include data collected from commercial, government, and other publicly available sources and may contain data about the business, including industry code, information about geography, and estimates of gross annual income, number of workers, and information about related natural persons, including the race and ethnicity of business owners. Some of these datasets contain restrictions on use, such as requiring a legitimate business purpose, and some may prohibit attempts to re-identify borrowers.

In addition to considering the steps an adversary would need to complete to re-identify the 1071 data and the various data sources that may be required to accomplish re-identification, including their limitations, the Bureau also has considered the capacity, incentives, and characteristics of potential adversaries, including those that may attempt re-identification for harmful purposes. In particular, a potential competitor of a small business or a firm with other commercial interests may seek information about a business's expansion strategy or financial condition, including whether it was able to obtain credit approval. This could be part of routine market monitoring or to gain a specific commercial advantage.

These potential adversaries could possess the resources to use private datasets in addition to publicly available records to re-identify the 1071 data. However, the Bureau has considered the extent to which much of the commercial benefit to be obtained by re-identifying the 1071 data may be more readily available from private datasets to which these potential adversaries already have access without the need for recourse to the 1071 data. In many cases, information from other datasets may be timelier than that found in the 1071 data.[805] Furthermore, some of these potential adversaries may refrain from re-identifying the 1071 data for reputational reasons or because they have agreed to restrictions on using data from the additional datasets described above for re-identification purposes.

Additionally, while some academics, researchers, and journalists might use de-identified 1071 data, some may be interested in re-identifying the 1071 data for research purposes. These persons may differ in their capacity to re-identify an applicant in the 1071 data. However, as mentioned above, some private datasets may have contractual terms prohibiting their use for re-identification purposes and therefore these persons may be restricted from actually using the 1071 data to re-identify applicants. Further, those academics or journalists with significant resources may be affiliated with organizations that have reputational or institutional interests that would not be served by re-identifying the 1071 data. These factors may reduce the risk of re-identification by such persons.

The Bureau has considered whether parties intending to commit identity theft or financial fraud may have the incentive and capacity to re-identify the 1071 data. As discussed under *Risk of Harm or Sensitivity* in part VI.C.4.ii below, the Bureau believes that the 1071 data would be of minimal use for these purposes. Further, these potential adversaries are not law abiding and may have easier, albeit illegal, ways to secure data for these purposes than attempting to re-identify application-level 1071 data.

*Re-identification based on personal knowledge.* In addition to the possibility of re-identifying applicants through matching 1071 data to other datasets, some potential adversaries may be able to re-identify a particular applicant or related natural person in the 1071 data by relying on personal knowledge about the applicant or natural person. The unmodified 1071 data would include location and demographic information, such as the race, sex, and ethnicity of principal owners, and industry information. These types of information may be likely to be known to a potential adversary who is familiar with a specific applicant or related natural person. Therefore, such a potential adversary may be able to re-identify a known applicant or related natural person without attempting to match a 1071 record to another data source. This potential adversary could include a customer, competitor, or person with other commercial ties to the applicant, or a neighbor or acquaintance of a related natural person, and the interest in re-identification may range from mere curiosity to the desire to embarrass or otherwise harm the applicant. These potential adversaries may possess a high level of specific knowledge about the characteristics of a particular applicant or related natural person. Adversaries who can re-identify an applicant or natural person based on personal knowledge would be able to complement their existing knowledge with the full 1071 application-level data, and therefore could contribute to risks of harm or sensitivity.

Pre-existing personal knowledge possessed by such a potential adversary would be limited to information about a subset of applicants and related natural persons. Thus, any re-identification attempt by such an adversary would likely target or impact a more limited number of applicants or natural persons, compared to the large numbers of applicants or natural persons who could be re-identified by

[804] *See generally* Fed. Trade Comm'n, *Data Brokers: A Call for Transparency and Accountability* (May 2014), *https://www.ftc.gov/system/files/documents/reports/data-brokers-call-transparency-accountability-report-federal-trade-commission-may-2014/140527databrokerreport.pdf* (describing the types of products offered and the data sources used by data brokers).

[805] *Cf.* 82 FR 44586, 44594 (Sept. 25, 2017) (explaining that the delay between action taken and publication of reported HMDA data ranges from three to 15 months).

adversaries possessing sophisticated matching techniques.[806]

Although the Bureau believes that location, protected demographic information, and industry information may be more likely to be known than other information in the 1071 data, it is impossible to predict the exact content of any pre-existing personal knowledge that such a potential adversary may possess. This uncertainty creates challenges for evaluating the degree to which individual data fields contribute to the risk of re-identification by such a potential adversary. For these reasons, the discussions of re-identification risk in the Bureau's analysis of data points below generally focus on the risk of re-identification based on matching, not on personal knowledge. The Bureau seeks comment on how the Bureau could assess re-identification risk arising from adversaries with personal knowledge.

*Applications that do not result in originations.* In its final policy guidance on the disclosure of loan-level HMDA data, the Bureau explained that the risk of re-identification to applicants is significantly lower for applications that do not result in originated loans.[807] The Bureau explained that the lack of public information about applications significantly reduces the likelihood that an adversary could match the record of a HMDA loan application that was not originated to an identified record in another dataset. The Bureau has not identified any publicly available information about applications for business loans. As discussed under *Implementation of the Balancing Test* in part VI.C.2 above, the Bureau lacks data necessary to perform a complete re-identification analysis at this time. However, the unmodified 1071 data might contain data fields that facilitate the re-identification of applicants. For example, the census tract and NAICS code data fields could result in unique combinations that an adversary could use to match to an identified public record, such as a business directory.[808]

*Overlap between HMDA and 1071 data generally.* As noted above in the section-by-section analysis of proposed § 1002.104(a), the Bureau anticipates that some applications would be reported under both HMDA and 1071.[809] The public loan-level HMDA dataset contains data fields in addition to, or that overlap with, the proposed 1071 data fields, and the proposed 1071 data includes data fields that are not included in the public loan-level HMDA dataset. The Bureau recognizes that, in cases of overlap, some 1071 data fields may require additional analysis with respect to risks of harm or sensitivity and re-identification posed by such overlap. When the Bureau performs a full re-identification analysis, it intends to consider the potential for applications reported under 1071 to be matched to loans reported under HMDA. The Bureau seeks comment on this issue and the implications of potential re-identification risk and potential risk of harm or sensitivity for applications reported under both section 1071 and HMDA.

ii. Risk of Harm or Sensitivity

In the SBREFA process, the Bureau sought feedback on the nature and scope of privacy interests of non-natural persons (*e.g.,* small business applicants and financial institutions) and natural persons (*e.g.,* principal owners of small businesses) that the Bureau should consider under its potential balancing test, including the types of sensitive commercial information that could be exposed by publishing the data points (individually or in combination) under consideration.[810]

A number of SERs and other stakeholders addressed the risk of harm or sensitivity from the disclosure of 1071 data in unmodified form.[811] Several SERs and other stakeholders stated that the disclosure of 1071 data could create a risk of harm or sensitivity for small businesses and related natural persons. Several SERs stated that public knowledge of borrowing activity (even without any other potential harms) would be very concerning to some small businesses as some small business owners consider that information sensitive or deeply personal. Some stakeholders stated that the disclosure of a banking relationship could raise harm or sensitivity concerns because it might lead to adverse inferences about the business's financial condition. One SER stated that small business owners valued their privacy just as much as consumers. Several industry commenters stated that 1071 data might reveal information about a small business's strategy or financial condition, as well as information about the personal characteristics or financial conditions of related natural persons, which the commenters stated could contribute to identity theft.

Several community group stakeholders stated, in contrast, that the risk of harm or sensitivity from publishing 1071 data would be minimal because some of the data are already publicly available. These stakeholders also stated that financial institutions likely exaggerate privacy concerns of small businesses or natural persons. With respect to concerns that publication of data could facilitate targeted marketing of predatory lending products, a community group stated that rather than fostering predatory practices, public disclosure would deter them by enabling the public to identify problematic pricing or loan terms and conditions and prevent them from becoming more widespread.

In addition to addressing the risks of harm and sensitivity to small businesses, several SERs and other stakeholders addressed potential risks of harm and sensitivity to financial institutions from the disclosure of 1071 data. Several SERs stated that 1071 data could be used to generate marketing lists and that this would result in creditors taking other financial institutions' customers away. One SER stated that, because of this, financial institutions may stop lending to small businesses in certain markets. In contrast, two SERs stated that it was relatively easy to obtain information on other financial institutions' small business lending activity. Two SERs stated that they were more concerned about the privacy of small business applicants or borrowers than the privacy of financial institutions, but that both mattered. In addition, one industry stakeholder expressed concern that disclosing the type or purpose of financing and the amount applied for and approved could facilitate re-identification of borrowers, particularly in rural areas or small towns. The commenter also expressed concern that disclosing this information could harm

[806] There may be more potential adversaries with personal knowledge than those with the ability to do any kind of sophisticated matching to other datasets, but it is not possible to predict.

[807] *See* 84 FR 649, 658 (Jan. 31, 2019); *see also* 82 FR 44586, 44593 n.55 (Sept. 25, 2017).

[808] In addition, as the Bureau believed in the HMDA context, some of the information contained in the unmodified 1071 data for applicants may permit an adversary to re-identify an applicant despite the lack of publicly available records. For example, if an applicant withdraws an application and obtains a loan secured by the same property from another institution, it may be possible to link the 1071 data for the withdrawn application with the data for the origination, as much of the property and applicant information would be identical. *See* 84 FR 649, 658 (Jan. 31, 2019); *see also* 82 FR 44586, 44593 n.55 (Sept. 25, 2017).

[809] Applications involving certain investment properties would be excluded from 1071 reporting. As discussed in the section-by-section analysis of proposed § 1002.104(b) above, proposed comment 104(b)–4 would exclude an extension of credit that is secured by 1–4 individual dwelling units that the applicant or one or more of the applicant's principal owners does not, or will not, occupy.

[810] *See* SBREFA Outline at 40–41.

[811] In this section, we summarize comments about harm and sensitivity that relate to the 1071 data generally. In the individual data field sections below, we summarize comments about risks of harm and sensitivity that relate to particular data fields.

community banks located in such areas. The commenter stated that this could happen because small businesses in such areas are likely to perceive that this information could cause them to be re-identified, and that they would respond by seeking financing with a large creditor in another town or online, rather than their community bank.

A few industry commenters expressed concern that the 1071 data could reveal information such as a financial institution's client lists, terms and conditions, insights about the financial institution's strategy in particular geographic areas, or, for certain financial institutions, sensitive supply management data. A community group commenter stated that public disclosure of 1071 data would not have significant negative effects on competition and could provide lenders with insights that could allow them to become more competitive.

Some SERs expressed concern that 1071 data could be used against financial institutions in litigation by class action attorneys or to harm their public reputations. One SER expressed concern that public disclosure of 1071 data could cause financial institutions to face more litigation, which, in the SER's view, would increase the cost of credit for small businesses. Another SER expressed concern that data users could misinterpret pricing information. For example, according to the SER, data users might infer discrimination based on higher pricing for an applicant, when the pricing was in fact unrelated to the applicant's race. The SER stated that the purpose of section 1071 was to help small businesses and asserted that releasing full 1071 data would present an opportunity for third parties to sue or criticize financial institutions.

Several industry commenters stated that data about loan terms would be sensitive because they would invite criticism of or litigation over disparities without accounting for various legitimate business reasons for disparities and increase compliance costs. Other industry commenters stated that publication of 1071 data would lead financial institutions to artificially lower prices, standardize underwriting, or reduce access to credit to limit exposure to fair lending litigation or reputational risk. One community group stated that it did not believe the purposes of section 1071 required the Bureau to take into account such financial institution concerns about litigation or reputational risk, compliance costs, or impacts on underwriting. One industry stakeholder stated that the Bureau could address these risks by providing clear guidance about how it would use 1071 data in its fair lending supervisory program.

The Bureau has considered whether, if an application-level record in the public 1071 data were to be re-identified, 1071 data reported to the Bureau would disclose information about an applicant, related natural person, or financial institution that is not otherwise public and may be harmful or sensitive.[812] Specifically, the Bureau has evaluated whether the 1071 data could be used for harmful purposes such as fraud or identity theft or the targeted marketing of products and services that may pose risks that are not apparent. The Bureau has also evaluated whether the 1071 data could cause competitive harm to small business applicants or to financial institutions. Furthermore, even where the disclosure of the data field is unlikely to lead to financial or other tangible harms, the Bureau has evaluated whether certain 1071 data fields may be viewed as sensitive if associated with a particular applicant, related natural person, or financial institution. In evaluating the potential sensitivity of a data field, the Bureau has considered whether disclosure of the data field could cause dignitary or reputational harm to small business applicants and related natural persons. The Bureau has also evaluated whether disclosure of the data field could cause reputational harm to financial institutions.

As discussed above and as noted by several community group stakeholders, some identifiable information about small business lending is currently available to the general public. Such information is available both in public records and in private datasets with varying barriers to access and restrictions on use. In evaluating the risk of harm or sensitivity created by the publication of the application-level 1071 data, the Bureau's analysis has considered the degree to which such disclosure would increase this risk relative to the risk that already exists, absent the public availability of 1071 data. Accordingly, the Bureau has considered whether the data that would be reported to the Bureau are typically publicly available in an identifiable form. The Bureau has also considered whether there are any barriers to accessing such data or restrictions on its use. In general, the Bureau believes that, where a data field is already publicly available, the risk of harm or sensitivity from the disclosure of that data field in the 1071 data is reduced.[813]

In evaluating the risk of harm or sensitivity created by the publication of the application-level 1071 data, the Bureau also has considered the likelihood that the application-level 1071 data would be re-identified. As discussed under *Re-Identification Risk* in part VI.C.4.i above, the Bureau generally believes that successful re-identification of application-level 1071 data would require several steps and may present a significant challenge. To the extent that the risk that re-identification would be accomplished is low, the risk of disclosing harmful or sensitive information would be reduced.

The Bureau agrees with commenters who stated that the disclosure of 1071 data could potentially create a risk of harm or sensitivity not only to natural persons, such as the owner of a small business that is a sole proprietorship, but also to non-natural persons. As discussed under *Balancing Test Design* in part VI.C.1 above, when considering the risk of harm or sensitivity, the Bureau's proposed balancing test would consider the risks to non-natural persons, including financial institutions.

The Bureau has considered whether the 1071 data could be used for harmful purposes such as fraud or identity theft or the targeted marketing of products and services that may pose risks that are not apparent. As noted above, several SERs and other stakeholders stated that the 1071 data could potentially be used for these purposes. The Bureau's preliminary view is that the unmodified application-level 1071 data would be of minimal use for purposes of perpetrating identity theft or financial fraud against applicants or related natural persons. The 1071 data would not include information typically required to open new accounts in the name of a small business's principal owner, such as Social Security number, date of birth, place of birth, passport number, or driver's license number. Additionally, the 1071 data would not include information useful to perpetrate existing account fraud, such as account numbers or passwords.[814]

[812] To the extent a section 1071 record could be associated with an identified applicant or related natural person, and successfully matched to another de-identified dataset to re-identify such a dataset, harmful or sensitive information in that dataset that is not otherwise public may also be disclosed.

[813] However, where a data field is already publicly available, disclosing that data field in the 1071 data may enable the matching of 1071 data to other datasets that may not be controlled by the Bureau, which could substantially facilitate re-identification or the disclosure of harmful or sensitive information.

[814] As noted above, however, to the extent a section 1071 record could be associated with an identified applicant or related natural person and could also successfully be matched to a de-identified dataset to re-identify such a dataset,

However, while the Bureau believes that the unmodified 1071 data would be of minimal use for perpetrating fraud or identity theft, the Bureau acknowledges that almost any information relating to a small business could, theoretically, be used for these purposes. As a result, the unmodified 1071 data could provide at least some additional data that could be used for these purposes. For example, the 1071 data could potentially be used in a phishing attack against an applicant by a perpetrator purporting to be the financial institution, or for knowledge-based authentication purposes.[815] While much information that may be useful for phishing or knowledge-based authentication—such as the name of the financial institution and the date of action taken—may already be available from UCC filings, the 1071 data may contain additional information that may be useful for such purposes, such as information about the type of loan and loan terms. However, some of this information may also be available from private data sources. The Bureau also notes that, based on the Bureau's expertise and analysis, the publication of HMDA data—which contains many data fields that are similar to data fields that would be disclosed under section 1071—has not resulted in any measurable increase in fraud or identity theft against mortgage applicants.

As several of the SERs and other stakeholders suggested, the Bureau has also considered whether the unmodified application-level 1071 data would provide information that is not already public and could be used for the targeted marketing of products and services that may pose risks that are not apparent. Although the 1071 data could be used to market products and services that would be beneficial for small businesses—perhaps increasing competition among creditors that could help small businesses receive better terms—they could also be used to target potentially vulnerable small businesses with marketing for products and services that may pose risks that are not apparent. While, as a community group stakeholder stated, the 1071 dataset may generally be useful for identifying predatory lending practices in the small business lending market, the Bureau believes that the targeted marketing of products that may pose risks that are not apparent is a harmful purpose for which 1071 data could potentially be used.

For example, data users might perceive certain 1071 data to reveal negative information about an applicant's financial condition or vulnerability to scams relating to debt relief or credit repair. Information about a loan might also be used for a practice known as ''stacking,'' in which some creditors have been alleged to obtain lead lists based on publicly available information and offer follow-on loans or advances that add to the debt burden carried by small businesses. Some creditors might also use the data for deceptive marketing practices. However, the utility of the 1071 data for predatory marketing practices may be limited by the delay between action taken on a loan and publication of the application-level 1071 data.

As several of the SERs and other stakeholders suggested, the Bureau has also considered whether the unmodified 1071 data would result in competitive harm to small business applicants or related natural persons. The 1071 data, if re-identified, may disclose some general information about a small business's use of credit that is not currently available to the general public. As discussed in the individual data field sections below, the Bureau acknowledges that certain 1071 data points in unmodified form could reflect negatively on the financial condition of a business or its owners.

As several of the SERs and other stakeholders recommended, the Bureau has also considered whether the unmodified 1071 data would result in competitive harm to financial institutions. As discussed below with respect to the financial institution identifying information that would be reported pursuant to proposed § 1002.109(b), the Bureau is proposing to identify the financial institution in the public application-level 1071 data. Therefore, the 1071 data could reveal general information about a financial institution's lending practices that is not widely available to the general public. Data fields such as census tract, NAICS code, credit type, and pricing could disclose information about where a financial institution is doing business, what industries it is doing business with, what kinds of products it is offering, and what kinds of prices it is charging, respectively. Additionally, as several SERs stated, if a small business applicant were to be re-identified, a financial institution's competitors could identify the small businesses to which the financial institution is offering or providing credit.

The Bureau acknowledges that the increased transparency into small business lending provided by 1071 data could reveal general information about a financial institution's lending practices that is not widely available to the general public, and that this information could be useful to others, including other financial institutions. For example, if the 1071 data were re-identified, a financial institution could potentially offer credit to a particular small business at a lower price than they received from another financial institution. However, the Bureau does not believe the unmodified application-level 1071 data would include key inputs for or be detailed enough to substantially facilitate the reverse-engineering of a financial institution's proprietary lending models. (For example, it would not include information about an applicant's credit history.) Financial institution concerns with disclosure of information about general lending practices are discussed in greater detail under *Balancing Risks and Benefits* in part VI.C.5 below.

As noted above, an industry commenter expressed concern that disclosing information about applicants in rural areas could lead them to seek financing elsewhere. However, from the perspective of a small business, seeking financing with a lender in another community would not necessarily reduce the risk that someone in the small business's community may ultimately re-identify them in the 1071 data because the 1071 data would be reported with respect to the location of the business, as discussed in the section-by-section analysis of proposed § 1002.107(a)(13) above (census tract). As discussed above, with respect to the concern about re-identification risk to applicants and related natural persons, the Bureau would determine the extent of re-identification risk when it has obtained a full year of reported 1071 data and would state its intentions, at that time, about whether certain 1071 data fields should be modified or deleted prior to public disclosure.

Some SERs expressed the concern, further detailed above, that 1071 data could harm financial institutions by increasing the amount of litigation against financial institutions. The Bureau acknowledges this risk, which is discussed in greater detail under *Balancing Risks and Benefits* in part VI.C.5 below, and in part VI.C.6.xviii with respect to the application of the proposed balancing test to financial institution identifying information.

In addition to considering whether the disclosure of a data field could lead to financial or other tangible harms,

harmful or sensitive information in that dataset that is not otherwise public may also be disclosed.

[815] Knowledge-based authentication (KBA) is a method of authentication which seeks to prove the identity of someone accessing a service, such as an account at a financial institution. KBA requires the knowledge of information about someone to prove that a person attempting to access a service is that person.

such as those described above, the Bureau has also considered whether the 1071 data fields might be viewed as sensitive. As noted above, several SERs and other stakeholders stated that disclosure of the unmodified 1071 data would divulge data that may be sensitive to applicants, related natural persons, or financial institutions. In assessing whether a data field creates a risk of sensitivity, the Bureau has evaluated whether its disclosure could lead to dignitary or reputational harm to small business applicants or related natural persons. For example, as several industry commenters stated, if the 1071 data were re-identified, the data could reveal information that casts a negative light on a small business's financial condition, such as the fact that a loan was denied due to a business's credit characteristics or cashflow. This information could be embarrassing to the small business and its owners.

The Bureau has also evaluated whether the disclosure of a data field could cause reputational harm to financial institutions. As noted above, some SERs expressed concern that 1071 data could harm a financial institution's reputation by leading data users to draw unfounded inferences about discrimination. The Bureau notes that several of the 1071 data fields, if disclosed in unmodified form, would help address this concern by serving as control variables. For example, many financial institutions consider a small business's revenue when assessing the risk of extending credit. As a result, disclosing gross annual revenue data would help ensure that data users who are evaluating potential disparities in underwriting or pricing can compare small businesses with similar revenues, thereby controlling for a factor that might provide a legitimate explanation for some disparities. The Bureau also notes that it does not expect that 1071 data alone could generally be used to determine whether a lender is complying with fair lending laws. The Bureau expects that, when regulators conduct fair lending examinations, they would analyze additional information before reaching a determination about an institution's compliance with fair lending laws.

In assessing the risk of sensitivity, the Bureau has also considered general societal and cultural expectations with respect to what information is available to the general public. For example, disclosing gross annual revenue in unmodified form could disclose sensitive information because it could reflect the financial condition of a small business or, where a small business is a sole proprietorship, a natural person. This type of information about a business's or natural person's financial condition is typically not available to the general public.

The Bureau also acknowledges the comments stating that some small businesses and their owners would consider the very fact that they sought credit sensitive, or would consider the disclosure of a banking relationship sensitive because others may draw adverse inferences about the small business's financial condition. These are concerns about sensitivity that would result merely from the re-identification of the applicant, rather than from the disclosure of particular data fields. The Bureau seeks to address these concerns by mitigating the risk of re-identification, as described under *Re-Identification Risk* in part VI.C.4.i above.

The Bureau seeks comment on its approach to assessing the risks of harm and sensitivity presented by the disclosure of unmodified 1071 data.

5. Balancing Risks and Benefits

Under the approach described in the SBREFA Outline, the Bureau would delete or modify 1071 data if disclosure of the data in unmodified form would pose risks to privacy interests that are not justified by the benefits of public disclosure in light of the statutory purposes of section 1071.[816] If the risks of disclosing unmodified data are not justified by the benefits under the balancing test, the Bureau would determine whether modifications or deletions could appropriately balance the risks and benefits. In the SBREFA Outline, the Bureau explained that it was considering various approaches that would appropriately advance privacy interests while still providing users with data useful to fulfilling the purposes of section 1071. The Bureau explained that these approaches could include various statistical disclosure limitation techniques when justified under the balancing test, such as those that mask the precise value of data points to prevent the disclosure of certain data elements. The Bureau also sought feedback generally on how it could mitigate concerns arising from re-identification risk.[817]

Several community group commenters stated that the Bureau should make as much data publicly available as possible to maximize data utility. One commenter stated that privacy concerns could be addressed through the prohibition on collecting personally identifiable information and increasing coverage of 1071 reporters and products. But this commenter, several SERs, and many other industry commenters expressed support for modifying or deleting the data from the public application-level 1071 data to balance privacy risks with the benefits of public disclosure. Commenters provided a wide variety of feedback on what kind of techniques would be appropriate, including publishing data in ranges, aggregating data, differential privacy, and data-swapping.[818] In addition, several industry commenters recommended that the Bureau reduce rule coverage to limit harms, such as by using asset thresholds and exclusions for types of financial institutions. By contrast, a community group commenter recommended that the Bureau expand the rule's coverage to increase the number of observations and reduce re-identification risk. One SER recommended a process by which covered financial institutions could identify certain application records that might present heightened re-identification risk and trigger further analysis by the Bureau before full application-level data are published.[819] Another SER suggested that the Bureau set a minimum sample size before publishing application-level data for some rural markets to avoid harm.[820]

*Balancing risks and benefits generally.* As noted previously, the Bureau intends to apply the proposed balancing test after it receives the first year of data reported pursuant to an eventual 1071 rule. For data fields the public disclosure of which the Bureau believes would create risks to privacy interests of applicants, related natural persons, or financial institutions, either because a field increases re-identification risk or poses a risk of harm or sensitivity, the Bureau intends to assess these risks against the benefits of disclosure. Where the Bureau determines that the disclosure of an individual data field, alone or in combination with other fields, would create risks to privacy that are not justified by the benefits of disclosure to 1071's purposes, the Bureau would consider whether it could appropriately balance the privacy risks and disclosure benefits through modification techniques or whether the field should be deleted from the public dataset. The Bureau also would evaluate the risks and benefits of disclosing a data field in light of modifications or deletions considered for other data fields.

[816] *See* SBREFA Outline at 41.

[817] *Id.* at 40–41.

[818] *See* SBREFA Panel Report at 35–36.

[819] *See id.* at 35.

[820] *See id.*

The Bureau is mindful of the connection between the risk of re-identification and the risk of harm or sensitivity. To the extent that the risk of re-identification created by disclosure of the 1071 data is reduced, the risk of disclosing harmful or sensitive information also would be reduced. Conversely, to the extent that the public application-level 1071 data would not disclose information that is harmful or sensitive, the consequences of re-identification would be reduced. Where the Bureau determines that modification of a data field is appropriate, the Bureau's consideration of the available forms of modification for the 1071 data would also be informed by the operational challenges associated with various forms of modification and the need to make application-level data available to the public in a timely manner.

The Bureau is also aware of concerns raised by SERs and other stakeholders, described under *Risk of Harm or Sensitivity* in part VI.C.4.ii above, that disclosing the proposed 1071 data in unmodified form could increase risks of litigation or reputational harm to financial institutions, and reveal information that could cause competitive harm to financial institutions. However, in applying the balancing test, the Bureau generally intends to give significant weight to the benefits of disclosure relative to these risks.

In general, the Bureau believes that deleting or modifying data because the data would disclose general information about a financial institution's lending practices—compared with information that could substantially facilitate, for example, the reverse-engineering of a financial institution's proprietary lending models—would be inconsistent with section 1071. As noted above, the statute directly contemplates disclosure of financial institution identity in connection with the public application-level dataset.[821] Each of the data fields prescribed by the statute—with the exception of the application number—could provide some insight into a financial institution's lending practices. If the Bureau were to exclude data on this basis, it would exclude virtually all of the statutorily required 1071 data points from the public data. This would significantly frustrate both of the statutory purposes of section 1071 because it would prevent the public from using the data to identify potential fair lending violations, and it would prevent communities and creditors from using the 1071 data to identify business and community development needs and opportunities of small businesses.[822] For example, this information could benefit more competitive creditors, as well as small businesses in obtaining credit at a lower cost.

While the Bureau acknowledges financial institutions' concern about the litigation and reputational risks involving section 1071 data, the Bureau does not believe that this concern justifies the exclusion of data from public disclosure. One of the statutory purposes of section 1071 is to facilitate enforcement of fair lending laws, which authorize enforcement by parties other than the Bureau.[823] Additionally, section 1071 contemplates that financial institutions would make their own application-level data available to the public, which necessarily entails their identification.[824]

*Modification techniques generally.* In light of the purposes of section 1071, the Bureau intends to modify or delete the 1071 data only as needed under the balancing test prior to public disclosure. The Bureau recognizes, as explained by community groups, that modifications, to varying degrees, may negatively impact the utility of the data for the fair lending and business and community development purposes of the statute. However, the proposed balancing test is designed to ensure that decisions to modify or delete the public application-level 1071 data take these benefits into account. Below, the Bureau addresses general issues related to modification techniques in the context of this proposal. These techniques are discussed in greater detail with respect to specific data points further below. Where no specific modification technique is described with respect to particular data points, the Bureau has not identified an obvious modification technique other than potentially swapping, suppression, or deletion, which are discussed below under *Other techniques.*

While certain information that directly identifies applicants or related natural persons generally would not be collected under the proposal, the Bureau does not believe this feature of the proposal would be sufficient to eliminate privacy risks that would arise from publishing the data in unmodified form, as discussed in greater detail under *Risks to Privacy Interests* in part VI.C.4 above. The Bureau also does not believe that privacy risks can be adequately resolved through rule coverage (*e.g.,* using asset thresholds and exclusions for types of financial institutions). While some re-identification risk could be reduced by increasing the number of loans reported to the Bureau, the Bureau does not believe the effects of doing so are necessarily predictable because re-identification risk depends on the characteristics of the data. Further, increasing the number of loans would not address risks of harm or sensitivity to re-identified applicants or natural persons. Suggestions for addressing privacy risks through exemptions are discussed under *Balancing Test Design* in part VI.C.1 above.

*Aggregate data.* The Bureau does not intend to address privacy risks for application-level 1071 data through aggregate disclosures at this time. As discussed in the section-by-section analysis of proposed § 1002.110(a) above, and as required by section 1071, the Bureau is proposing to make available to the public the information submitted to it by financial institutions pursuant to proposed § 1002.109, subject to deletions or modifications made by the Bureau. As discussed in the section-by-section analysis of proposed § 1002.110(b) above, and as authorized by the statute, the Bureau may, at its discretion, compile and aggregate information submitted by financial institutions pursuant to proposed § 1002.109, and make any compilations or aggregations of such data publicly available as the Bureau deems appropriate. The Bureau initially anticipates making the data collected under section 1071 available at the application level—with appropriate potential modifications and deletions—rather than providing aggregate data with counts and averages for each data field. The Bureau may consider releasing aggregated data in the future, after it determines whether narrower modifications or deletions could address privacy risks. The Bureau received some suggestions to consider ''differential privacy'' techniques.[825] Such techniques are typically used in connection with aggregate statistics to reduce the identifiability of more granular data. The Bureau seeks comment on whether differential privacy techniques might be appropriate for application-level data.

*Recoding.* The Bureau intends to consider various methods to ''recode'' the proposed data fields as necessary

[821] *See* ECOA section 704B(f)(2)(B).

[822] *See* ECOA section 704B(a).

[823] *See, e.g.,* ECOA section 706 (providing for civil liability).

[824] *See* ECOA section 704B(f)(2).

[825] Differential privacy provides a way to measure the contribution of any one record to the aggregate statistics disclosed in a way that makes re-identification risk easily quantifiable and allows those involved in the data production to keep re-identification risk under a certain risk tolerance.

under the balancing test. Recoding techniques decrease the number of distinct categories for a data field. In the context of the 1071 data fields, recoding would involve providing the value of a data field in a higher-level category that increases the number of records within a given combination. Some data fields like census tract and NAICS code have structures that permit recoding without developing new 1071-specific recoding categories. For example, if the Bureau were to determine that the re-identification risk presented by the census tract data field does not justify the benefits of unmodified disclosure, the Bureau could instead provide geography at the county level, for example, since census tracts are designed to be non-overlapping subdivisions of a county.

The Bureau also intends to consider recoding through the use of bins or intervals of values for data fields that, in unmodified form, would have continuous values (such as data fields for amount applied for, amount approved, gross annual revenue, or number of workers). Unmodified continuous data fields can be highly identifying, depending on the data field, but binning these values can reduce the risk of re-identification substantially. An additional approach for continuous data fields would be to top- or bottom-code the data field to prevent extreme values from being released that may be particularly identifiable. This approach could be performed alone or in conjunction with recoding the data into intervals.

*Other techniques.* The Bureau might also consider ''targeted suppression'' techniques. Targeted suppression makes certain values of data points unavailable for records when a certain combination of values is held by too few records. The Bureau might consider, for example, treating certain values of data points as ''not available'' if the application is the only small business application from a particular census tract. Targeted suppression can be applied in several ways. One way would be to remove the value of a field that makes the record identifiable. For example, if census tract and NAICS code identify a record, the microdata could delete the value of the NAICS code for any applications that are in cells deemed sensitive. A second approach could leave the census tract and NAICS code but suppress the values of other data points. This method would reduce the potential harm if the record were re-identified. A third approach could be to remove the record from the dataset entirely. In general, suppression is a more common approach for aggregate data than for application-level data.

One drawback to targeted suppression is that it complicates data analysis for any end user. For example, with respect to the public application-level 1071 data, a data user would be presented with millions of rows, but in certain rows and for certain data points, values would be missing.[826] Another drawback is that suppression would need to be done in a way such that the remaining unmodified data do not provide a user with the ability to back out the modified field, sometimes involving complementary suppression or deleting values of other applications to ensure that the missing value cannot be reengineered. The Bureau seeks comment on whether targeted suppression techniques could preserve the benefits of the public application-level 1071 data, and, if so, what the Bureau should consider as the minimum cell size to implement targeted suppression.

The Bureau seeks comment on other modification techniques, such as ''data swapping'' (sometimes called ''switching''). Data swapping involves finding two records that are similar on several dimensions and swapping the values for other data fields between the two records. In effect, data swapping would require that the Bureau preserve certain data fields while swapping others. Another set of techniques for addressing privacy risks for continuous data would involve adding ''random noise'' to the reported values. For example, under ''additive noise techniques,'' a random value is added to the existing value of the data field. Under ''multiplicative noise techniques,'' the true value is multiplied by a random value. The Bureau seeks comment on whether such techniques would preserve the benefits of the public application-level 1071 data. A drawback to these approaches is that data would be released with values that do not match the true values of the underlying data.[827] Data users would need to take such modifications into account when performing any analyses.[828]

The Bureau has considered the SER recommendation for allowing financial institutions to identify records that might present heightened re-identification risk. The Bureau appreciates this suggestion but is not proposing it because privacy risks are likely common to many types of applicants, related natural persons, and financial institutions and such risks should be addressed in a broader context, such as through this proposal. The Bureau's proposed process for obtaining public input on the balancing test is discussed under *Implementation of the Balancing Test* in part VI.C.2 above.

6. Preliminary Application of the Balancing Test to Public Application-Level 1071 Data

As explained above, the Bureau does not yet have data under section 1071 and does not believe that there are comparable datasets that it could use as an adequate proxy for 1071 data to which it could apply the balancing test at this time. However, as recommended by the SBREFA Panel, the Bureau is providing additional detail on how it would apply the balancing test to the 1071 data fields as set forth in the proposal.[829]

In accordance with the proposed balancing test described above, privacy risks may not be justified by the benefits of disclosure if disclosing the data field in unmodified form would substantially facilitate the re-identification of applicants and related natural persons, or disclose information about an applicant, related natural persons, or a financial institution that is not otherwise public and may be harmful or sensitive. The Bureau has proposed modifications or deletions for the proposed financial institution identifying information (other than contact information for natural persons), and the proposed use of free-form text for certain data. The Bureau also is proposing not to disclose the proposed unique identifier in unmodified form. However, because the Bureau is not conducting a full re-identification analysis at this time, it has not determined whether the privacy risks of disclosing the other proposed data fields

[826] Data users would need to carefully understand the method behind the modifications and plan analyses to account for the fact that the suppressed data would necessarily not reflect all small business loans in a given year.

[827] For example, with respect to the amount applied for data field, a recoding technique would release the values of the data field in broad categories, for instance ''$100,000–$150,000.'' In such case, the broader category provides less information but reflects the true value of the underlying data. Noise addition, by contrast, would involve the Bureau manipulating (in a standardized and documented way) the actual values of loan amount. An application's loan amount may be released as $85,000 in the public dataset when the true value was $78,000.

[828] Even if, for instance with additive random noise, the data maintain the underlying average value, users would need to take into account the change in the variance associated with the modification. While the Bureau can provide all the required information to make these adjustments, they would require a level of data analysis sophistication that may not be possessed by all potential users of the eventual 1071 data.

[829] *See* SBREFA Panel Report at 48.

in unmodified form in the public application-level 1071 data would be justified by the benefits of disclosure. Accordingly, the Bureau has not yet determined whether data fields—other than those for the proposed unique identifier data point, the proposed financial institution identifying information, and the proposed free-form text that would be used to report some of the data—should be deleted, modified, or published in unmodified form.

The Bureau is setting forth its preliminary analysis below to provide transparency and obtain public feedback. The Bureau seeks comment on its analysis of the public disclosure benefits and privacy risks for each data field. Specifically, the Bureau seeks comment on the following issues with respect to each data field, individually or in combination with others: (1) Whether there are additional benefits of unmodified public disclosure in light of the purposes of the statute; (2) whether disclosure in unmodified form would reveal additional information that might be considered harmful or sensitive by an applicant, related natural person, or financial institution; and (3) whether disclosure in unmodified form would significantly contribute to the risk that an applicant or related natural person might be re-identified. The Bureau seeks comment on other modification techniques it could use, and whether deletion would appropriately balance the benefits of disclosure with privacy risks.

i. Unique Identifier

Proposed § 1002.107(a)(1) would require financial institutions to collect and report an alphanumeric identifier, starting with the legal entity identifier of the financial institution, unique within the financial institution to the specific covered application, and which can be used to identify and retrieve the specific file or files corresponding to the application for or extension of credit.

Disclosing the unique identifier in the public application-level 1071 data in unmodified form would help data users conducting fair lending analysis or seeking to identify business and community development needs or opportunities. This data field would allow data users to run analyses that quickly compare specific records to detect trends or disparities. The unique identifier would also provide data users a way to identify, distinguish, and organize credit and application data, which is invaluable for data processing.

Disclosing the unique identifier in the 1071 data in unmodified form by itself would likely disclose minimal, if any, information about an applicant or related natural person that may be harmful or sensitive if such person were re-identified, or that may be harmful or sensitive to an identified financial institution. As noted above, section 1071 prohibits financial institutions from including in 1071 records certain personally identifiable information that directly identifies a natural person applicant or someone connected with the applicant.[830] In addition the Bureau is proposing to prohibit financial institutions from reporting information that would directly identify a small business. For these reasons, the Bureau does not expect that the unique identifier would be considered harmful or sensitive.

A few industry stakeholders expressed concern that small businesses could be identified if application or loan numbers were added to UCC filings. Although publicly available datasets do not presently include the unique identifier data field, financial institution legal entity identifiers are publicly available, and the Bureau is aware of rare instances in which a loan number is included in UCC filings. In addition, as the Bureau noted in its policy guidance on the disclosure of loan-level HMDA data, many jurisdictions publicly disclose real estate transaction records in an identified form, and the Bureau believes many financial institutions include loan numbers on these publicly recorded documents.[831]

The Bureau believes inclusion of the proposed unique identifier, rather than application or loan numbers, would limit the possibility of using application or loan number to match 1071 data to those publicly recorded documents, thus reducing risk of re-identification. However, there is a risk that, after financial institutions begin to report data under section 1071, they may replace the loan numbers currently assigned to small business loans with the unique identifier and, if they do, the unique identifier could be included on publicly recorded documents. Especially considering the uniqueness of the identifiers, this data field on a publicly recorded document could be used to match a 1071 record to an identified public record directly and reliably.

In light of these potential re-identification risks, the Bureau proposes not to publish the proposed unique identifier data field in unmodified form. The Bureau seeks comment on whether there are modifications that would appropriately balance identified privacy risks and disclosure benefits. The Bureau is considering the feasibility of disclosing a separate unique identifier that the Bureau could create. The Bureau is also considering deleting the data field from the public application-level 1071 data, but seeks comment on whether the proposed deletion would create challenges for users of the data and, if so, how the Bureau could address those challenges other than by creating a separate unique identifier. The Bureau notes that some of the benefits of the unique identifier in analyzing the data could be achieved through the Bureau's proposed disclosure of LEI, as discussed in part VI.C.6.xviii below. The Bureau also notes that the universal loan identifier reported to the Bureau under HMDA, which is similar in function to the proposed unique identifier, is currently excluded from the public loan-level HMDA data.[832]

The Bureau seeks comment on this analysis as well as its proposal not to publish the unique identifier in unmodified form.

ii. Application Date

Proposed § 1002.107(a)(2) would require financial institutions to collect and report the date the covered application was received by the financial institution or the date shown on a paper or electronic application form.

Disclosing application date in the public application-level 1071 data in unmodified form would allow data users to monitor trends over time in small business lending. Application date also would provide a disaggregated piece of temporal data that can be used to identify seasonality in small business lending (for example, when combined with the pricing data fields to show interest rates charged to applicants over a specific date range). In fair lending analyses, application date would provide data users with the means to compare level of service (from application date to action taken date) and identify potential disparities on a prohibited basis between applications. Application date could also act as a control for factors that may provide a legitimate explanation for some disparities, such as interest rates during different time periods or differences in general economic conditions or institutional practices over time.

By itself, disclosing application date in the 1071 data in unmodified form would likely disclose minimal, if any, information about an applicant or

[830] ECOA section 704B(e)(3).

[831] *See* 82 FR 44586, 44599 (Sept. 25, 2017); *see also* 84 FR 649, 660 (Jan. 31, 2019).

[832] *See* 84 FR 649, 660 (Jan. 31, 2019).

related natural person that may be harmful or sensitive if such person were re-identified, or that may be harmful or sensitive to an identified financial institution. It is conceivable that an adversary such as a competitor or other market participant may find it helpful to understand when a business is seeking credit; for example, to better understand the business's strategy and cash flow needs. In addition, marketers and creditors could use this information to target products to entities recently in the market for credit, either to deploy new funds or to refinance out of a current loan. However, the Bureau does not believe that disclosing the application date would otherwise disclose sensitive information about a small business or its owner, or any information that would be used for harmful purposes. Any utility of this data field for such purposes would be curtailed by the time lag in public release of the 1071 data.

The Bureau has not identified publicly available datasets that include data fields an adversary could directly match to the application date field. However, an adversary may be able to infer a likely origination date based on typical time lags between application, credit decision, and origination, potentially enabling matching to other datasets that record these later dates.

If the Bureau determines that application date should be modified, the Bureau may consider disclosing the application date at a higher level; for example, disclosing the month and year but not the specific date. In light of the potential re-identification risk arising from this data field, the Bureau seeks comment on whether there are other specific modifications it should consider, and whether deletion would balance the risks and benefits of disclosure.

The Bureau seeks comment on this analysis.

iii. Application Method and Application Recipient

Proposed § 1002.107(a)(3) would require financial institutions to collect and report the means by which the applicant submitted the covered application directly or indirectly to the financial institution. A financial institution would report whether the applicant submitted the application in person, by telephone, by mail, or online. Proposed § 1002.107(a)(4) would require financial institutions to collect and report whether the applicant submitted the covered application directly to the financial institution or its affiliate, or whether the applicant submitted the covered application indirectly to the financial institution via a third party.

Disclosing application method and whether the application was submitted indirectly in the public application-level 1071 data would further the fair lending enforcement purpose of the statute. Application method information would allow the public to better understand the role of the financial institution as a creditor and would facilitate pricing analyses by helping the public identify potential factors in pricing outcomes. In addition, proposed § 1002.107(a)(20) would require the collection of race or ethnicity information for the applicant's principal owner(s) using visual observation or surname in certain circumstances. If the Bureau finalizes this proposal, application method information would provide context for the information collected.

Information about application method and whether the application was submitted directly or indirectly also would promote the community and business development purposes of the statute. This information would improve the public's understanding of the structure of small business lending originations across the market, the methods by which credit is originated for particular groups or underserved markets, and trends over time (for example, the extent to which applicant preferences shift from in-person to online interactions).

Disclosing application method and whether the application was submitted directly or indirectly, in unmodified form, would likely disclose minimal, if any, information about an applicant or related natural person that may be harmful or sensitive if such person were re-identified. If applicants or related natural persons were re-identified, application method is likely to be of relatively limited utility to an adversary because it conveys little information about a natural person's characteristics or a business's financial condition. While adversaries interested in targeted marketing could direct future marketing efforts to a business using the same application channel, it is likely that marketing firms already possess strategic information about the best methods for establishing contact. Unmodified disclosure of application method and whether the application was submitted indirectly may reveal information that financial institutions regard as harmful or sensitive, but, as discussed under *Risk of Harm or Sensitivity* in part VI.C.4.ii above, the Bureau does not believe that disclosure would permit the reverse-engineering of a financial institution's proprietary lending models.

The Bureau has not identified publicly available datasets that include data fields an adversary could directly match to the application method or application recipient data fields in unmodified form in the public application-level 1071 data with respect to an applicant or related natural person. While the Bureau's HMDA data and the GSE loan-level datasets include acquisition channel information in loan-level data, these datasets do not identify applicants or related natural persons. Therefore, an adversary would face challenges in using application method or application recipient information to match a section 1071 record to an identified publicly available record. However, the Bureau seeks comment on whether there are other identifiable application/loan-level datasets that include this information or whether HMDA data or the GSE loan-level datasets could be matched to other identifiable datasets.

The Bureau seeks comment on this analysis.

iv. Credit Type

Proposed § 1002.107(a)(5) would require financial institutions to collect and report to the Bureau certain information about the type of credit applied for or originated. The proposal would require financial institutions to report three categories of information that together constitute the type of credit. First, the proposal would require financial institutions to report the type of credit product.[833] Second, the proposal would require financial institutions to report the type or types of guarantees that were obtained for an extension of credit, or that would have been obtained if the covered credit transaction had been originated.[834] Third, the proposal would require financial institutions to report the

[833] A financial institution would be required to select the credit product requested from the following list: Term loan—unsecured, term loan—secured, line of credit—unsecured, line of credit—secured, credit card, merchant cash advance, other sales-based financing transaction, other, or not provided by applicant and otherwise undetermined. A financial institution reporting ''other'' would be required to enter the type of credit product as free-form text. The Bureau analyzes free-form text under the proposed balancing test in part VI.C.6.xix below.

[834] A financial institution would be required to select the type of guarantee from the following list: Personal guarantee—owner(s), personal guarantee—non-owner(s), SBA guarantee—7(a) program, SBA guarantee—504 program, SBA guarantee—other, USDA guarantee, FHA insurance, Bureau of Indian Affairs guarantee, other Federal guarantee, State or local government guarantee, other guarantee, or no guarantee. A financial institution reporting ''other guarantee'' would be required to enter the type of guarantee as free-form text. The Bureau analyzes the free-form text under the balancing test in a separate subsection below.

length of the loan term, in months, if applicable.

Disclosing data about the type of credit product, type of guarantee, and loan term in the public application-level 1071 data in unmodified form would facilitate enforcement of fair lending laws by allowing data users to determine whether any disparities in underwriting or pricing may be due to differences in these features of a loan.

Disclosing these data would also be useful for identifying business and community development needs. These data would enable the public to understand whether certain types of credit are disproportionately available to certain groups. For example, information about the presence or lack of collateral would provide more information about lending patterns in different geographic areas and for different groups of applicants. Furthermore, each of the credit type data fields would help the public avoid misinterpretations of the 1071 data. In addition, information on the distribution of government loan guarantees (such as those provided in SBA programs) across different geographic areas and groups of applicants could provide information about how those programs function on the ground, aiding in fulfilling the business and community development purpose of section 1071. Information about the type of guarantee would also allow communities, governmental entities, and creditors to monitor the use of personal guarantees, which carry additional risk to the guarantors and businesses. Finally, information about loan term would provide insights into the pricing and sustainability of closed-end credit transactions.

The Bureau believes that data about the type of credit product, type of guarantee, and loan term could disclose information that may be harmful or sensitive to applicants or related natural persons. A business's competitors could use these data fields—in conjunction with the loan amount and pricing data fields—to draw inferences about the business's financial condition based on whether the business obtained credit on favorable or unfavorable terms. The type of guarantee data fields could indicate heightened credit risk for the applicant.[835] Credit type data also could be used for targeted marketing of products and services that may pose risks that are not apparent to the business or related natural persons.

Disclosure of the type of credit product, type of guarantee, and loan term in unmodified form may reveal information that financial institutions regard as harmful or sensitive, such as the types of products they offer or the government programs in which they participate. However, as discussed under *Risk of Harm or Sensitivity* in part VI.C.4.ii above, the Bureau does not believe that disclosure of these data fields would permit the reverse-engineering of a financial institution's proprietary lending models. Furthermore, general information about the types of credit a financial institution is offering is widely available on creditor websites and in marketing materials.

The Bureau is aware that certain identified datasets include application-level information on the type of credit product, type of guarantee, or loan term. Government lending programs, such as the SBA's 7(a) and 504 programs, publish loan-level data that indicate the term of the loan and whether the loan is a term loan or a line of credit. In some States, UCC filings may include some information related to the type of collateral. In the Bureau's view, the existing public availability of this information decreases the potential harm or sensitivity of disclosing information about the type of credit product, type of guarantee, and loan term in the 1071 data.

The Bureau has identified publicly available datasets that include data fields an adversary could directly match to the credit type data fields in unmodified form in the public application-level 1071 data with respect to an applicant or related natural person. As noted above, information about the type of credit product, loan term, and type of collateral is found in many publicly available datasets, including data from government lending programs and, in some States, UCC filings. Therefore, in many cases, an adversary could use this information, combined with other fields, to match a section 1071 record to an identified publicly available record.

If the Bureau determines that the type of guarantee should be modified, the Bureau may consider disclosing values that are more general than the values reported to the Bureau. For example, the Bureau could disclose ''Federal guarantee'' instead of disclosing the specific program. If the Bureau determines that the loan term should be modified, the Bureau may consider recoding loan term data into bins—for example, using intervals of two or five years—to reduce the potential for re-identification risk.

The Bureau seeks comment on this analysis.

v. Credit Purpose

Proposed § 1002.107(a)(6) would require financial institutions to collect and report to the Bureau the purpose or purposes of the credit applied for or originated.[836]

Disclosing the purpose of the credit in the public application-level 1071 data in unmodified form would facilitate enforcement of fair lending laws. Because financial institutions may generally consider credit used for certain purposes to be riskier than credit used for other purposes, data about the purpose of the credit would help ensure that users can compare applicants with similar profiles, thereby controlling for factors that might provide non-discriminatory explanations for some disparities in credit and pricing decisions. Disclosing data about the purpose of the credit would also be useful for identifying business and community development needs and opportunities of small businesses. Information about the purpose of the credit would help the public understand whether small businesses face barriers accessing credit that they would be seeking to use for a particular purpose. In conjunction with NAICS code and census tract, information about the purpose of the credit could help the public understand whether small businesses in certain industries or in certain communities face unique challenges accessing credit to, for example, purchase equipment or expand their businesses.

Disclosing the purpose of the credit in the 1071 data in unmodified form by itself would likely disclose minimal, if any, information about an applicant or

[835] For example, the ''SBA guarantee—7(a) program'' data field could indicate heightened credit risk because this program is intended for businesses that have been unsuccessfully applying for credit or have had some other difficulty in accessing credit.

[836] A financial institution would be required to report the credit purpose or purposes by selecting the purpose or purposes of the covered credit transaction applied for or originated from the following list: Purchase, construction/improvement, or refinance of owner-occupied dwelling(s); purchase, construction/improvement, or refinance of non-owner-occupied dwelling(s); purchase, construction/improvement, or refinance of non-dwelling real estate; purchase, construction/improvement, or refinance of owner-occupied, non-dwelling real estate; purchase, refinance, or rehabilitation/repair of motor vehicle(s) (including light and heavy trucks); purchase, refinance, or rehabilitation/repair of equipment; working capital (includes inventory or floor planning); business start-up; business expansion; business acquisition; refinance existing debt (other than refinancings listed above); line increase; other; not provided by applicant and otherwise undetermined; or not applicable. A financial institution reporting ''other'' would be required to enter the purpose or purposes as free-form text. The Bureau analyzes free-form text under the proposed balancing test in part VI.C.6.xix below.

related natural person that may be harmful or sensitive if such person were re-identified, or that may be harmful or sensitive to an identified financial institution. However, information about the purpose of the credit could be useful to adversaries such as a small business's competitors, potential acquirers, or new market entrants, since it contains information about a business's strategy and performance, such as whether a business is expanding or conducting an acquisition. Nonetheless, this information would generally not be detailed enough to cause small businesses competitive harm. The value of this information to a small business's competitors is also likely to be mitigated by the delay between the date of action taken on a loan and the publication of the application-level 1071 data.

Disclosure of credit purpose in unmodified form may also reveal information that financial institutions regard as harmful or sensitive, such as information that a financial institution offers credit that is used for certain purposes. However, as discussed under *Risk of Harm or Sensitivity* in part VI.C.4.ii above, the Bureau does not believe that disclosure would permit the reverse-engineering of a financial institution's proprietary lending models.

The Bureau has not identified publicly available datasets that include data fields an adversary could directly match to the credit purpose data fields in unmodified form in the public application-level 1071 data with respect to an applicant or related natural person. Identified public datasets pertaining to small business loans generally do not contain information about the purpose of the credit. Therefore, an adversary would have difficulty using the credit purpose data fields to match a section 1071 record to an identified publicly available record accurately.

The Bureau seeks comment on this analysis.

vi. Amount Applied for

Proposed § 1002.107(a)(7) would require financial institutions to collect and report to the Bureau the initial amount of credit or the initial credit limit requested by the applicant.

Disclosing amount applied for in the public application-level 1071 data in unmodified form would help facilitate enforcement of fair lending laws by allowing data users to control for other variables in the data. Several industry representatives expressed concern that these data could lead to misinterpretations based on perceived disparate treatment as opposed to the complex nature of commercial lending. For example, financial institutions may consider different or additional underwriting criteria, depending on the amount applied for. Applications for large lines of credit might require an in-depth cash-flow analysis, while a smaller line of credit may be underwritten, in part, based on a business's (or business owner's) credit scores. In conjunction with amount approved or originated, this data field would allow data users to determine the difference between the amount an applicant requested, and the amount approved or originated. This information would also help data users identify potentially discriminatory lending patterns and distinguish them from legitimate business factors when combined with other data. This type of information is important to consider in fair lending analyses since the amount applied for may affect the likelihood of denial or the price of an approved loan.

Amount applied for would also help data users understand lending disparities. For example, data users would be able to identify potential fair lending violations where certain small businesses disproportionately receive less credit than applied for on a prohibited basis. Finally, the amount applied for would help communities, governmental entities, and creditors monitor the demand for credit. Specifically, when combined with NAICS code and census tract, the amount applied for could help data users assess the demand for credit in particular industries and communities and enable data users to devise strategies for narrowing or eliminating potential inequalities.

Disclosing amount applied for in the 1071 data in unmodified form would likely disclose information about an applicant or related natural person that may be harmful or sensitive if such person were re-identified. Business owners might view details about the amount applied for as sensitive, particularly where they are concerned about the risk of being re-identified as an applicant for credit. In addition, the amount applied for could also lead to targeted marketing of products or services that pose risks that are not apparent, because it could help lenders target small businesses that received less credit than they requested with offers for loans at higher rates or fees. The amount applied for is generally not included in other publicly available data, so it would likely not be useful to adversaries seeking to match 1071 data with other publicly available data. However, the Bureau believes amount applied for would be useful to an adversary. For example, a significant shortfall between the amount applied for and the amount approved could be used either by an applicant's competitor or by a consumer, to infer that the business has a relatively weak financial position. With information on whether or not a business is granted a loan, an adversary might gain insight into the scale of a business's objectives based on the amount applied for and/or approved. The relative scarcity of this information at present would also increase the value to adversaries of re-identification. In addition, as discussed under *Risk of Harm or Sensitivity* in part VI.C.4.ii above, the Bureau does not believe that disclosure would permit the reverse-engineering of a financial institution's proprietary lending models.

The Bureau has not identified publicly available datasets that include data fields an adversary could directly match to the amount applied for data field in unmodified form in the public application-level 1071 data with respect to an applicant or related natural person.

If the Bureau determines that the amount applied for should be modified, the Bureau may consider recoding the data into bins. For example, the Bureau could recode the amount applied for into bins of $25,000.

The Bureau seeks comment on this analysis.

vii. Amount Approved or Originated

Proposed § 1002.107(a)(8) would require financial institutions to collect and report to the Bureau: (i) For an application for a closed-end credit transaction that is approved but not accepted, the amount approved by the financial institution; or (ii) for a closed-end credit transaction that is originated, the amount of credit originated; or (iii) for an application for an open-end credit transaction that is originated or approved but not accepted, the amount of the credit limit approved.

Disclosing amount approved or originated in the public application-level 1071 data in unmodified form would allow users to identify potentially discriminatory lending patterns in which small business applicants might be receiving less credit due to a prohibited basis. These data would also enable data users to devise strategies for narrowing or eliminating these inequalities. Additionally, in conjunction with amount applied for, disclosure of these data fields would allow data users to determine if there is a difference between the amount requested and the amount approved or originated. This information would help data users identify any potentially discriminatory lending patterns in

which small businesses might disproportionately receive less credit than what they applied for on a prohibited basis. As described above, when combined with the amount applied for, these data also could provide significant value as a control in fair lending analysis. Additionally, due to the sometimes complex nature of underwriting in commercial lending, when combined with credit purpose these data would allow users to identify potential discrimination when comparing loan applications for similar purposes.

The amount approved or originated would also be useful for business and community development purposes. Disparities with respect to the provision of credit can significantly impede the growth of women-owned and minority-owned businesses. When combined with census tract, these data could help users understand whether women-owned and minority-owned businesses are experiencing issues accessing credit in their communities (separate from the question of whether potential fair lending violations are occurring). When combined with NAICS codes, these data could help users understand whether women-owned and minority-owned businesses in particular industries are struggling to access credit. In addition, these data would allow data users to approximate the size of the small business lending market.

Like the amount applied for data field, disclosing amount approved or originated in the 1071 data in unmodified form would likely disclose information about an applicant or related natural person that might be harmful or sensitive if such person were re-identified, or that might be harmful or sensitive to an identified financial institution. The Bureau believes that information about the amount approved or originated could be useful to potential adversaries. For example, for creditors, these data fields would provide some insight into competitors' lending practices, particularly when combined with other data points such as gross annual revenue, number of workers, time in business, and pricing. These data might allow creditors to make general inferences about the relative risk appetites of their competitors. However, as discussed under *Risk of Harm or Sensitivity* in part VI.C.4.ii above, the Bureau does not believe that disclosure would permit the reverse-engineering of a financial institution's proprietary lending models.

The Bureau has identified publicly available datasets that include data fields an adversary could directly match to the amount approved or originated data fields in unmodified form in the public application-level 1071 data with respect to an applicant or related natural person. Credit amount approved or originated is often widely available in public datasets, such as loan-level data for the SBA 7(a) and 504 programs, as well as property records and UCC filings. Therefore, in unmodified form, adversaries would be able to match the amount of credit approved or originated to an existing public record.

If the Bureau determines that the amount approved or originated should be modified, the Bureau may consider recoding the data into bins. For example, the Bureau could recode the data into bins of $25,000.

The Bureau seeks comment on this analysis.

viii. Action Taken (Type) and Denial Reasons

Proposed § 1002.107(a)(9) and (11) would require financial institutions to collect and report to the Bureau the action taken by the financial institution on the covered application, reported as originated, approved but not accepted, denied, withdrawn by the applicant, or incomplete; and if applicable, for denied applications, the principal reason or reasons the financial institution denied the covered application.[837]

Disclosing action taken and denial reasons in the public application-level 1071 data in unmodified form would provide important data on credit outcomes for small businesses, including women-owned and minority-owned small businesses, that apply for credit. Data provided by these data fields would allow data users to examine the rates of originations, approvals, denials, and incomplete and withdrawn applications, and whether they differ among groups protected under ECOA. Of the stakeholders that provided feedback on this issue, several supported the collection of action taken and denial reason data in order to track demand for credit and identify potential discrimination. Information that credit was originated or was approved, but not accepted, would help data users determine whether there are potential disparities in the terms and conditions received by women-owned and minority-owned small businesses. Information that an application was incomplete or withdrawn would highlight potential issues of discouragement, level of assistance disparities, or other discriminatory treatment that could cause women-owned or minority-owned small businesses to walk away from the lending process or otherwise fail to complete the application. One commenter stated that capturing incomplete and withdrawn applications was important as it may reflect discouragement or discriminatory treatment, and that the approved but not accepted category could reflect less favorable pricing or loan terms. For example, when combined with amount approved or originated, data users could also identify issues of possible discouragement where lenders have potentially under-funded loan applications from women-owned and minority-owned businesses.

Denial reasons would help data users examine reasons for credit denials particularly for women-owned and minority-owned businesses. For example, when combined with action taken date, denial reasons could help identify potential denial reasons disproportionately affecting protected classes, which may be useful to identify discrimination and enable data users to potentially develop strategies for narrowing or eliminating inequalities. These data would also be useful as a way to compare similarly situated applicants, which could be useful to both identify and explain potential disparities. Disclosing action taken and denial reasons would also be useful for business and community development purposes. The type of action taken would provide insights into the supply of credit. Data users would be able to monitor rates of credit denial, which can provide information on the willingness of creditors to lend, when combined with other data. Granular denial reason codes would also provide useful actionable information to small business applicants generally. For example, where small businesses are denied loans because of insufficient collateral, or time in business, data users could help direct programs and investment targeted specifically to these businesses in a particular community. When combined with census tract, analysis of denial reasons by geographical area could help identify whether small businesses in certain areas are experiencing higher rates of

[837] As discussed in the section-by-section analysis of proposed § 1002.107(a)(12) above, the list of denial reasons would include the following: Business credit characteristics, personal credit characteristics (of business owner(s) or guarantor(s)), use of loan proceeds (*i.e.,* a non-permissible purpose), cash flow, collateral (insufficient or inappropriate or unacceptable), time in business, government criteria, aggregate exposure of business and its principal owner(s), unverifiable information, other, or not applicable. A financial institution reporting ''other'' would be required to enter the denial reason or reasons as free-form text. The Bureau analyzes free-form text under the proposed balancing test in part VI.C.6.xix below.

denial and the specific reasons for denial.

During the SBREFA process, stakeholders commented that disclosure of denial reasons would be embarrassing for applicants and might discourage them from applying for credit.[838] Several industry commenters believed that reporting reasons for denial would reveal information that would be very harmful or sensitive for businesses or natural persons. The Bureau agrees that this information could be harmful or sensitive for applicants or related natural persons.

Commenters also described sensitivities associated with originated loans, such as concerns that some small business owners could be reluctant to be perceived as needing credit in the first place. One industry stakeholder believed that disclosure of action taken would allow competitors to reverse engineer a financial institution's credit scoring model. The Bureau does not believe disclosing the fact that credit was sought, in and of itself, likely would be harmful or sensitive to small businesses because credit is widely used by small businesses. Furthermore, the harm or sensitivity of disclosing information that credit was originated is mitigated by the publication of originated loan details in UCC filings, for instance. Additionally, as discussed under *Risk of Harm or Sensitivity* in part VI.C.4.ii above, the Bureau does not believe that disclosure of action taken would permit the reverse-engineering of a financial institution's proprietary lending models.

The Bureau has not identified publicly available datasets that include data fields an adversary could directly match to data fields for denied applications (and reasons for denial) in unmodified form in the public application-level 1071 data with respect to an applicant or related natural person. However, at a category level, these data fields could tell adversaries which records it may be possible to match against other databases that include originated loans, as opposed to unoriginated loan records that cannot be matched in this way. Credit denials or credit offered but not originated are generally not disclosed to the public. Specifically, most of these data fields included in this data point are not found in publicly available sources of records that contain the identity of an applicant; the only data field that would be consistently available would be for originated loans. Without such an identified publicly available record to match with, there would likely be difficulty in attempting to re-identify an applicant by matching a 1071 record using these data fields.

However, as discussed under *Re-Identification Risk* in part VI.C.4.i above, adversaries may be able to use other data fields, such as census tract, NAICS code, and identified public information, such as business directories, to determine the identity of an applicant or related natural person. Thus, if applicants and related natural persons could be re-identified, an adversary could learn information about application denials for these businesses and use this information for a variety of purposes.

The Bureau seeks comment on this analysis. In light of the potential harm or sensitivity arising from the disclosure of application denials and the reasons for denial, the Bureau seeks comment on whether there are specific modifications it should consider, and whether modifying these data fields by grouping them, or deleting these data fields, would appropriately balance the privacy risks and benefits of disclosure, in light of the purposes of section 1071.

ix. Action Taken Date

Proposed § 1002.107(a)(10) would require financial institutions to collect and report the date of the action taken by the financial institution.

Disclosing action taken date in the public application-level 1071 data in unmodified form would allow data users to monitor trends over time in small business lending more precisely than they could if only the year were disclosed.[839] When combined with application date, information about the date of action taken would enable data users to determine the length of time, for different groups, between when businesses applied for credit and when they received the credit decision. This information would have benefits for fair lending analysis, allowing data users to determine whether certain groups experience different processing times (for example, longer processing for women-owned business, or faster denials for minority-owned businesses). The action taken date also would help ensure that users evaluating potential disparities in pricing or other terms and conditions can compare applicants that obtained loans on similar dates, thereby controlling for factors that might provide a legitimate explanation for some disparities, such as different market interest rates or different institutional practices over different time periods.

Disclosing action taken date in the 1071 data in unmodified form would likely disclose minimal, if any, information about an applicant or related natural person that may be harmful or sensitive if such person were re-identified, or that may be harmful or sensitive to an identified financial institution.

The Bureau has identified publicly available datasets that include data fields an adversary could directly match to the action taken date data field in unmodified form in the public application-level 1071 data with respect to an applicant or related natural person. Public availability of the action taken date depends on the type of action taken. For example, the approval date of originated loans is widely publicly available in SBA 7(a), 504, and other program loan-level records that identify borrowers, and the date of executed agreements is often available for property records and UCC filings, which could be closely related to action taken date. For originated loans, action taken date would substantially facilitate matching with publicly available datasets that identify borrowers. Additionally, the 1071 data could identify the lender as well as the application date and action taken date. Where action taken date is on or near the UCC filing date, for example, an adversary might be able to use the date and lender on the UCC filings to identify the borrowers of originated loans in the eventual 1071 data. Action taken date may be less useful in re-identifying applicants of loans that were not originated because the action taken date for such loans is rarely publicly available.

If the Bureau determined that action taken date should be modified, the Bureau may consider disclosing the date at a higher level; for example, disclosing the month in which action was taken, but not the specific date. This could reduce the re-identification risk from sources such as UCC filings that may include the specific date of action taken. In light of the potential re-identification risk arising from this data field, the Bureau seeks comment on whether there are other specific modifications it should consider and whether deletion would balance the risks and benefits of disclosure.

The Bureau seeks comment on this analysis.

x. Pricing Information

Proposed § 1002.107(a)(12) would require financial institutions to collect and report to the Bureau the following

[838] *See* SBREFA Panel Report at 34–35.

[839] Whether or not the Bureau discloses the date of action taken, the application-level data will indicate the year in which action was taken, because the 1071 data would be disclosed annually based on the date of action taken.

information regarding the pricing of a covered credit transaction that is originated or approved but not accepted, as applicable: (i) The interest rate;[840] (ii) total origination charges, defined as the total amount of all charges payable directly or indirectly by the applicant and imposed directly or indirectly by the financial institution at or before origination as an incident to or a condition of the extension of credit; (iii) broker fees, defined as the total amount of all origination charges that are fees paid by the applicant directly to a broker or to the financial institution for delivery to a broker; (iv) initial annual charges, defined as the total amount of all non-interest charges that are scheduled to be imposed over the first annual period of the covered credit transaction; (v) additional costs for merchant cash advances or other sales-based financing, defined as, for a merchant cash advance or other sales-based financing transaction, the difference between the amount advanced and the amount to be repaid; and (vi) prepayment penalties.[841]

The Bureau believes that these pricing data fields would serve to further both the fair lending purpose and the business and community development purpose of section 1071. The statutory data points alone offer limited insight into underwriting disparities and no insight into predatory prices or pricing disparities. For example, the statutory data points alone might show that a particular market segment is expanding and apparently filling an important need, but this could actually be an area with predatory conduct. Pricing information would allow the Bureau and others to understand the situation more accurately. Data collection without pricing information could have the unintended consequence of incentivizing irresponsible lending, as providers seeking to increase representation of underserved groups could be encouraged to adopt high-cost models of lending.

Without information on pricing, data users would be unable to screen for fair lending pricing risks and prioritize fair lending enforcement resources. In addition, if potential discriminatory conduct is monitored effectively with regard to loan approvals, but not with regard to pricing, industry compliance systems may focus solely on approvals and denials and ignore potential pricing disparities. Having pricing data available in the public application-level 1071 data would also increase transparency and demonstrate to responsible lenders where business opportunities exist to offer credit to underserved markets. Pricing data could also help small businesses identify where credit may be available on better terms. The Bureau provides additional analysis of the benefits of the pricing data fields in the section-by-section analysis of proposed § 1002.107(a)(12) above, including proposed § 1002.107(a)(12)(i) through (vi).

During the SBREFA process, several industry commenters expressed concern that pricing data could lead financial institutions to artificially flatten prices or create misperceptions about disparities among applicants, in light of the complexity of underwriting decisions. One industry commenter stated that pricing data could present ''privacy risk'' to applicants in rural communities, without specifying the nature of the risk. Several SERs stated that pricing data may be sensitive to financial institutions. One of these SERs suggested that even aggregate pricing information would be commercially sensitive data for a financial institution. While acknowledging other SERs' concerns, a few SERs stated that information on competitors' pricing is relatively easy to obtain now.

The Bureau believes that information about the interest rates and fees charged in connection with credit represents basic information about the features of a product generally would present low risk of harm or sensitivity. Disclosure of pricing data in unmodified form may reveal information that some applicants or related natural persons may regard as harmful or sensitive, such as a reflection of their perceived credit risk. However, the Bureau received feedback during the SBREFA process that multiple factors contribute to pricing for small business credit. Disclosure of pricing data in unmodified form may also reveal information that financial institutions regard as harmful or sensitive, such as the prices a financial institution charges for certain types of credit. However, as discussed under *Risk of Harm or Sensitivity* in part VI.C.4.ii above, the Bureau does not believe that disclosure of pricing information would permit the reverse-engineering of a financial institution's proprietary lending models.

The Bureau has identified publicly available datasets that include data fields an adversary could directly match to the pricing data fields in unmodified form in the public application-level 1071 data with respect to an applicant or related natural person. Identified data about the interest rate and fees charged for a given loan are available from a limited number of publicly available datasets, such as data for the SBA 7(a) and 504 programs. Additionally, the PPP loan program has a uniform 1 percent interest rate.

During the SBREFA process, one industry stakeholder stated that, if pricing data are collected, the Bureau should publish them along with demographic information only in aggregate form, such as at an industry or multi-firm level, rather than the application level. The commenter stated that publication of pricing information along with demographic information risks creating the perception of potential fair lending violations that are not based on adequate analysis. The Bureau notes that 1071 data alone (including pricing data) generally could not be used to determine whether a lender is complying with fair lending laws. For example, HMDA data have a long history of utility for fair lending purposes even though they alone generally do not offer proof of compliance with fair lending laws. Additionally, in the section-by-section analysis of proposed § 1002.107(a)(12) above, the Bureau seeks comment on additional information that could help reduce misinterpretations of disparities in pricing, including modifications to the pricing information under proposed § 1002.107(a)(12).

If the Bureau determines that pricing data should be modified, the Bureau may consider recoding the pricing information data fields into bins. For example, the Bureau may consider recoding interest rates into bins of 0.25 percentage points or origination fees into bins of $500. The Bureau may also consider top-coding pricing data fields, which would mask particularly high values.

The Bureau seeks comment on this analysis.

[840] If the interest rate is fixed, the proposal would require the financial institution to report the interest rate that is or would be applicable to the covered credit transaction. If the interest rate is adjustable, the proposal would require the financial institution to report the margin, index value, and index name that is or would be applicable to the covered credit transaction at origination. The proposal would also require the financial institution to report the index used by selecting the index used from a specified list. If the index used does not appear on the list of indices provided, the financial institution would report ''other'' and provide the name of the index as free-form text. The Bureau analyzes free-form text under the proposed balancing test in part VI.C.6.xix below.

[841] The proposal would require the financial institution to report whether the financial institution could have included a charge to be imposed for paying all or part of the transaction's principal before the date on which the principal is due under the policies and procedures applicable to the covered credit transaction. The proposal also would require the financial institution to report whether the terms of the covered credit transaction include a charge imposed for paying all or part of the transaction's principal before the date on which the principal is due.

xi. Census Tract

Proposed § 1002.107(a)(13) would require financial institutions to collect and report the census tract in which is located: (1) The address or location where the proceeds of the credit applied for or originated will be or would have been principally applied; or, (2) if this information is unknown, the address or location of the main office or headquarters of the applicant; or, (3) if this information is also unknown, another address or location associated with the applicant. In addition to reporting the census tract, the financial institution would be required to indicate which one of these three types of addresses or locations the census tract is based on.

Disclosing census tract data in the public application-level 1071 data in unmodified form would aid in fulfilling both the fair lending and business and community development purposes of section 1071 by providing more useful information on the location of the credit activity for fair lending analysis and understanding where the business and community development is occurring. With respect to fair lending enforcement, a measure of geography at the neighborhood or community level is necessary to identify redlining—the illegal practice in which those in a certain area or neighborhood are denied access to credit, are charged higher prices, or are otherwise not given the same access to credit as those in other areas, on the basis of race or for some other prohibited reason. Additionally, because differences in the level of competition in the local credit market may contribute to differences in interest rates or approval rates for otherwise similarly situated small businesses, census tract data would help ensure that users can compare applicants with similar profiles, thereby controlling for factors that might provide non-discriminatory explanations for some disparities in credit and pricing decisions.

The inclusion of a geographic indicator, such as census tract, that identifies the appropriate community—not merely the appropriate county or State—would further the statute's community and business development purposes. Census tract data would enable data users to monitor credit conditions in particular communities and identify communities that are underserved by the small business credit market. In addition, requiring data on the nature of the address reported would aid in fulfilling both the fair lending and business and community development purposes of section 1071 by facilitating accurate analyses of the data reported.

Disclosing the census tract in the 1071 data in unmodified form would likely disclose minimal, if any, information about an applicant or related natural person that may be harmful or sensitive if such person were re-identified, or that may be harmful or sensitive to an identified financial institution. The Bureau is aware that, for sole proprietors, the main office address of small business applicants is frequently a home address. However, the actual street address would not be reported or disclosed. In addition, small businesses commonly make their locations available in the normal course of their business by disclosing their addresses.

If the address reflects where the proceeds of the credit will be or would have been principally applied, disclosing the census tract may reveal some information about an applicant's business strategy, particularly if paired with the loan purpose data field. For example, the data could indicate that a small business is pursuing or was pursuing an expansion to a particular address. However, the value of this information to a small business's competitors is likely to be mitigated by the delay between the date of action taken on a loan and the publication of the application-level 1071 data. Disclosure of the census tract in unmodified form may also reveal information that financial institutions regard as harmful or sensitive, such as a financial institution's trade area. However, as discussed under *Risk of Harm or Sensitivity* in part VI.C.4.ii above, the Bureau does not believe that disclosure would permit the reverse-engineering of a financial institution's proprietary lending models.

During the SBREFA process, several industry stakeholders stated that geographic identifiers such as census tract would have a high potential to contribute to the re-identification of businesses or natural persons, especially in small towns or rural areas, where only one or two businesses may be located in a census tract. Several industry commenters expressed concern about re-identification risks arising from the combination of the census tract data fields with other data fields, noting that it might be difficult to predict which data fields could contribute to re-identification. One commenter stated that tax assessor and UCC records could be used to re-identify businesses in rural areas, and that adversaries with personal knowledge of businesses in rural areas could learn about a business's or natural person's sensitive financial characteristics. Some SERs stated that the combination of geographic identifiers and information about a small business's industry could make it easy to re-identify businesses in remote or rural areas.[842] Two industry stakeholders stated that census tract and data about the type and purpose of financing would contribute to the re-identification of businesses or natural persons. One of these commenters also stated that combining geographic identifiers with data on the amount applied for or approved could contribute to re-identification. One industry commenter stated that census tract, combined with gross annual revenue and NAICS code, could facilitate re-identification of applicants in areas with low populations. A community group stakeholder stated that increasing the universe of financial institutions reporting 1071 data would mitigate privacy concerns about disclosing census tract.

The Bureau has identified publicly available datasets that include data fields an adversary could directly match to the census tract data field in unmodified form in the public application-level 1071 data with respect to an applicant or related natural person. The Bureau expects that, in most cases, the census tract that financial institutions would report to the Bureau would be based on the address or location of the main office or headquarters of the applicant, either because that is where the proceeds of the credit will be applied or because the financial institution does not know the location or address where the proceeds of the credit will be applied, but does know the main office or headquarters address. The Bureau believes that, for many small businesses, this address or location is likely to be publicly available on the internet from sources such as the business's website and review websites. Information about a business's location is also likely available from loan-level data for public loan programs as well as from private datasets, such as from data brokers. Therefore, in many cases, the Bureau believes an adversary could use the census tract data fields, combined with other fields, to match a section 1071 record to an identified publicly available record.

Disclosing the census tract is likely to produce unique instances in the data—particularly when combined with the 6-digit NAICS code, if the 6-digit NAICS code is disclosed in unmodified form. There are currently 73,057 census tracts and 1,057 6-digit NAICS codes,[843]

[842] *See* SBREFA Panel Report at 34–35.

[843] *See* U.S. Census Bureau, *2010 Census Tallies, https://www.census.gov/geographies/reference-*

which produce over 77 million combinations. With so many possible combinations, there would likely be many instances in the 1071 data where the census tract and 6-digit NAICS code form a unique combination. Regarding the comment that increasing the universe of financial institutions reporting 1071 data would mitigate privacy concerns about disclosing census tract, the Bureau's proposals regarding the coverage of the 1071 rule are addressed elsewhere in this proposed rule.

During the SBREFA process, several commenters suggested ways the Bureau might modify census tract data to reduce privacy risk. Several industry commenters recommended that the Bureau disclose geographical data on the county or State level to reduce re-identification risk. One SER recommended the reporting of geographic data only at the State level or higher. The SER stated that even county-level data in some areas could potentially lead to re-identification of applicants or borrowers.

A joint comment from a number of community groups recommended that the Bureau consider modifying data with a low number of observations in a census tract to be reported at the zip code or county level. One SER recommended that the Bureau establish a minimum sample size before publishing application-level data for some rural markets to avoid privacy risks. A community group stakeholder recommended masking techniques such as moving data from a census tract with few observations to a contiguous or nearby census tract. This commenter also recommended that the Bureau consider switching records for similarly situated applicants between nearby census tracts to make it impossible to reconnect individual applicants while preserving the benefits of the data.

If the Bureau were to modify census tract, it might consider disclosing a broader location category, such as county or State. Census tracts are defined by the U.S. Census Bureau, and the next-largest geographic identifier in the Census Bureau's hierarchy of geographic identifiers is county. The next-largest geographic identifier after county is State. While likely reducing re-identification risk substantially, disclosing the county or State instead of the census tract would also reduce the utility of the 1071 data. There are 73,057 census tracts, as noted above, but only 3,143 counties,[844] suggesting a significant loss of geographic detail in modifying census tract. The Bureau could potentially use a geographic designation larger than census tract but smaller than county. However, since the use of Census Bureau-defined geographies is widespread, using modifications that already reflect standard Census Bureau-defined geographies significantly improves the utility of the data to data users.

The Bureau seeks comment on this analysis. The Bureau seeks comment on how disclosing the county, State, or some other geographic identifier—rather than the census tract—would affect the benefits of disclosure, the potential for harm or sensitivity, and the potential for re-identification of applicants or related natural persons.

xii. Gross Annual Revenue

Proposed § 1002.107(a)(14) would require financial institutions to collect and report to the Bureau the gross annual revenue of the applicant for its preceding full fiscal year prior to when the information is collected.

Disclosing gross annual revenue in the public application-level 1071 data in unmodified form would facilitate enforcement of fair lending laws. Many creditors use gross annual revenue to help define whether a business is a small business and set revenue thresholds for assigning risk. Information about gross annual revenue would help ensure that users who are evaluating potential disparities in underwriting or pricing can compare small businesses with similar revenues, thereby controlling for a factor that might provide a legitimate explanation for some disparities. Disclosing gross annual revenue would also be useful for identifying business and community development needs and opportunities of small businesses. And because gross annual revenue is often used as a proxy for the size of a small business, these data could allow users to determine the availability of credit for small businesses of various sizes—including the very smallest businesses, which may face unique challenges accessing credit.

Disclosing gross annual revenue in the 1071 data in unmodified form would likely disclose information about an applicant or related natural person that may be harmful or sensitive if such person were re-identified. One SER stated during the SBREFA process that, in the case of sole proprietorships, gross annual revenue can serve as a proxy for the small business owner's personal income. The Bureau believes that disclosing gross annual revenue in unmodified form would likely disclose sensitive information because it could reflect the financial condition of a small business or, where a small business is a sole proprietorship, a natural person. With respect to the risk of harm or sensitivity to financial institutions, other creditors might use gross annual revenue data to learn more about the types of small businesses with which their competitors do business. However, as discussed under *Risk of Harm or Sensitivity* in part VI.C.4.ii above, the Bureau does not believe that disclosure would permit the reverse-engineering of a financial institution's proprietary lending models.

Gross annual revenue data are likely to be of interest to potential adversaries. As described below, gross annual revenue data are not available on a widespread basis from identified public databases. Competitors of the small business, other commercial entities, creditors, researchers, or persons with criminal intent all may have an interest in using these data to monitor the size or performance of an applicant that may be a rival, partner, or target of inquiry, investigation, or illegal activity.

The Bureau has identified publicly available datasets that include data fields an adversary could directly match to the gross annual revenue data field in unmodified form in the public application-level 1071 data with respect to an applicant or related natural person. Gross annual revenue data are available from private databases. Gross annual revenue data are also available from data for New York State's women- and minority-owned business certification program, in which it is recoded into bins. However, these data are not available from identified public databases on a widespread basis.

During the SBREFA process, a community group stakeholder recommended that the Bureau consider reporting gross annual revenue in categories rather than specific amounts. An industry commenter recommended that the Bureau delete gross annual revenue from the public application-level 1071 data to protect the privacy of an applicant or related natural person. If the Bureau determines that gross annual revenue should be modified, the Bureau may consider recoding gross annual revenue data into bins by, for example, disclosing the data in ranges of $25,000. The Bureau may also consider top-coding gross annual revenue, which would mask particularly high values, thereby reducing the identifiability of application data from businesses with especially high gross annual revenue.

*files/time-series/geo/tallies.html* (last visited Aug. 23, 2021) (2010 Census Tallies) (number of census tracts); Off. of Mgmt. & Budget, *North American Industry Classification System (NAICS) Updates for 2022,* 86 FR 35350, 35352 (July 2, 2021) (number of 6-digit NAICS codes).

[844] *See* 2010 Census Tallies.

The Bureau seeks comment on this analysis.

xiii. NAICS Code

Proposed § 1002.107(a)(15) would require financial institutions to collect and report to the Bureau a 6-digit North American Industry Classification System (NAICS) code appropriate for the applicant.[845]

Disclosing 6-digit NAICS codes in the public application-level 1071 data in unmodified form would be useful for identifying business and community development needs and opportunities of small businesses. Such business and community development needs and opportunities may differ widely based on industry, even controlling for other factors. For example, 6-digit NAICS codes would help data users understand how small businesses in different industries use credit as well as identify industries in which small businesses face challenges accessing credit. Furthermore, disclosing NAICS codes would provide for consistency and compatibility with other public datasets related to small business lending activity, which generally use NAICS codes. This ability to synthesize 1071 data with other datasets would help the public use the data in ways that would advance both the fair lending and business and community development purposes of section 1071.

Disclosing 6-digit NAICS codes in the 1071 data in unmodified form would also facilitate enforcement of fair lending laws in other ways. Financial institutions often designate certain industries as high-risk, such as industries that have high rates of businesses leaving the market or that deal primarily in cash transactions. The 6-digit NAICS codes would help ensure that users can compare applicants with similar profiles, thereby controlling for factors that might provide non-discriminatory explanations for some disparities in credit and pricing decisions. The Bureau also believes that using the SBA's 6-digit NAICS codes (as opposed to the 2-digit code) would enable the public to identify whether disparities arise at a sector level and would provide more specific information on the types of businesses that are accessing or struggling to access credit.[846]

Including 6-digit NAICS codes in the public application-level 1071 data in unmodified form by itself would likely disclose minimal, if any, information about an applicant or related natural person that may be harmful or sensitive if such person were re-identified, or that may be harmful or sensitive to an identified financial institution. The 6-digit NAICS codes are unlikely to be harmful or sensitive to a small business because information about a small business's industry is likely to be apparent to anyone interacting with it. Disclosure of the 6-digit NAICS codes in unmodified form may reveal information that financial institutions regard as harmful or sensitive, such as the industries with which the financial institution does business. However, as discussed under *Risk of Harm or Sensitivity* in part VI.C.4.ii above, the Bureau does not believe that disclosure would permit the reverse-engineering of a financial institution's proprietary lending models.

During the SBREFA process, several industry commenters stated that NAICS codes would increase re-identification risk for small businesses, particularly in combination with geographic identifiers, such as census tract. The Bureau has identified publicly available datasets that include data fields an adversary could directly match to the NAICS code data field in unmodified form in the public application-level 1071 data with respect to an applicant or related natural person. A business's NAICS code is likely to be publicly available in loan-level data for public loan programs such as the 7(a), 8(a), or PPP programs and in private datasets. In addition, even where the specific NAICS code may not be publicly available, it could be derived with reasonable accuracy from other public information that is available for most businesses, such as business directories, a business's website, or from personal observation by members of the community where a business is located. Therefore, in many cases, an adversary could use 6-digit NAICS codes, combined with other fields, to match a section 1071 record to an identified publicly available record.

The 6-digit NAICS code data field is likely to produce unique instances in the data, especially when combined with census tract, if census tract is disclosed in unmodified form. There are currently 73,057 census tracts and 1,057 6-digit NAICS codes,[847] which produce over 77 million combinations. With so many possible combinations, there would likely be many instances in the 1071 data where the census tract and 6-digit NAICS code form a unique combination.

If the Bureau determines that the 6-digit NAICS code should be modified, the Bureau may consider disclosing NAICS codes at a higher level by disclosing the 2-digit, 3-digit, or 4-digit NAICS code instead of the 6-digit code. Disclosing NAICS code at a higher level would reduce re-identification risk but would also reduce the utility of the data. There are 1,057 6-digit NAICS codes, as noted above, but there are only 99 3-digit subsectors and 20 broad 2-digit sectors.[848] As a result, disclosing NAICS code at a higher level would reduce the specificity of the information in the 1071 data about the small business's industry.

The Bureau seeks comment on this analysis. The Bureau specifically seeks comment on how disclosing the 2-, 3-, or 4-digit NAICS code—rather than the 6-digit NAICS code—would affect the benefits of disclosure, the potential harm and sensitivity, and potential for re-identification for this data field.

xiv. Number of Workers

Proposed § 1002.107(a)(16) would require financial institutions to collect and report to the Bureau the number of non-owners working for the applicant.

Disclosing number of workers in the public application-level 1071 data in unmodified form would be useful for identifying business and community development needs and opportunities of small businesses. This information would give the public a greater understanding of how the business and community development needs and opportunities of small businesses may differ based on the number of workers. The number of workers would help the public understand, for example, the extent to which ''non-employer'' businesses, which do not have

[845] As discussed above in the section-by-section analysis of proposed § 1002.107(a)(15), the SBA customizes its size standards on an industry-by-industry basis using 1,057 6-digit NAICS codes. The first two digits of a NAICS code broadly capture the industry sector of a business. The third digit captures the industry's subsector, the fourth captures the industry group, and the fifth captures the industry code. The NAICS code thus becomes more specific as digits increase and the 6-digit long code is the most specific. For example, NAICS code 453910 describes a pet supply store, for which the 2-digit industry sector is the 44–45 ''Retail Trade'' sector. *See* Small Bus. Admin., *Table of Small Business Size Standards Matched to North American Industry Classification System Codes, https://www.sba.gov/sites/default/files/2019-08/SBA%20Table%20of%20Size%20Standards_Effective%20Aug%2019%2C%202019_Rev.pdf.*

[846] For example, a wide variety of businesses, including those providing car washes, footwear and leather goods repair, and nail salons all fall under the 2-digit sector code 81: Other Services (except Public Administration).

[847] *See* 2010 Census Tallies (number of census tracts); Off. of Mgmt. & Budget, *North American Industry Classification System (NAICS) Updates for 2022,* 86 FR 35350, 35352 (July 2, 2021) (number of 6-digit NAICS codes).

[848] Off. of Mgmt. & Budget, *North American Industry Classification System (NAICS) Updates for 2022,* 86 FR 35350, 35352 (July 2, 2021).

employees besides the owner, and ''microbusinesses,'' which are typically defined as having fewer than 10 employees, may face unique challenges accessing credit or may use credit in different ways. Identifying the number of workers would also allow data users to understand the number of jobs supported by loans to a business. Disclosing the number of workers would also advance the fair lending purpose of section 1071. This information would help ensure that users of the 1071 data who are evaluating potential disparities in underwriting or pricing can compare small businesses with a similar number of workers, thereby controlling for a factor that might provide a legitimate explanation for some disparities.

Disclosing number of workers in the application-level 1071 data in unmodified form would likely disclose minimal, if any, information about an applicant or related natural person that may be harmful or sensitive if such person were re-identified, or that may be harmful or sensitive to an identified financial institution. Financial institutions may use data about the number of workers to learn more about the types of small businesses with which their competitors do business. However, as discussed under *Risk of Harm or Sensitivity* in part VI.C.4.ii above, the Bureau does not believe that disclosure would permit the reverse-engineering of a financial institution's proprietary lending models.

Furthermore, information about the number of workers is also likely to be publicly available for many businesses. State registries of businesses may include information about a business's number of workers. Private databases also commonly include this information, which is often verified by the business. Further, loan-level records from SBA loan programs include a field for the number of jobs supported by a loan, which in some instances may reflect the business's number of workers. In the Bureau's view, the public availability of this information decreases any potential sensitivity or harm of disclosing number of workers in the application-level 1071 data. At the same time, the Bureau believes that the utility of number of workers data in the public application-level 1071 data to potential adversaries would be low due to the widespread public availability of this information.

The Bureau has identified publicly available datasets that include data fields an adversary could directly match to the number of workers data field in unmodified form in the public application-level 1071 data with respect to an applicant or related natural person. As noted above, information about a business's number of workers is found in many publicly available datasets in which the business's name is identified, including State business registries, commercial databases, and loan-level records from SBA loan programs. Therefore, in many cases, an adversary could use number of workers, combined with other fields, to match a section 1071 record to an identified publicly available record. Data on a business's number of workers may easily produce unique combinations, particularly when combined with other data fields in the public application-level 1071 data and particularly for businesses with higher numbers of workers, which are more likely to be unique in the dataset.

If the Bureau determines that the number of workers data field should be modified, the Bureau may consider recoding the data into bins. The Bureau could also top-code number of workers, given that larger values in the 1071 data are more likely to be unique.

The Bureau seeks comment on this analysis.

xv. Time in Business

Proposed § 1002.107(a)(17) would require financial institutions to collect and report to the Bureau the time the applicant has been in business, described in whole years, as relied on or collected by the financial institution.

Disclosing time in business in the public application-level 1071 data in unmodified form would advance both the fair lending and business and community development purposes of section 1071. As discussed in greater detail above in the section-by-section analysis of proposed § 1002.107(a)(17), start-ups and new businesses play an important role in the business ecosystem, particularly with respect to job creation. Time in business data would allow data users to better identify the proportion of small businesses seeking credit that are start-ups or relatively new businesses, the types of credit that are offered and provided to start-ups and newer businesses, the geographic makeup of those businesses, the types of financial institutions that are reaching such businesses, and where communities might focus business development efforts. The data may also aid policymakers in addressing issues impacting the growth of small start-ups. The data, particularly as to unmet demand, could help interested financial institutions identify lending opportunities to reach more start-ups and new businesses, promoting both business and community development.

Disclosing time in business would also facilitate the enforcement of fair lending laws. Because lenders generally perceive younger businesses as having higher credit risk, time in business data would help ensure that users can compare applicants with similar profiles, thereby controlling for factors that might provide non-discriminatory explanations for some disparities in credit and pricing decisions.

Disclosing time in business in the 1071 data in unmodified form would likely disclose minimal, if any, information about an applicant or related natural person that may be harmful or sensitive if such person were re-identified, or that may be harmful or sensitive to an identified financial institution. During the SBREFA process, one industry commenter recommended that the Bureau delete time in business from the public application-level 1071 data, citing general concerns that the data field could facilitate re-identification and disclose previously non-public information to competitors.[849] However, while financial institutions may use time in business data to learn more about the types of small businesses with which their competitors do business, the Bureau does not believe that disclosure would permit the reverse-engineering of a financial institution's proprietary lending models, as discussed under *Risk of Harm or Sensitivity* in part VI.C.4.ii above. Information about time in business is also likely to be publicly available for many businesses. Businesses typically disclose their date of establishment in public registration filings. Many commercial databases also include this information. In the Bureau's view, the existing public availability of this information decreases any potential harm or sensitivity of disclosing time in business in the public application-level 1071 data.

The Bureau has identified publicly available datasets that include data fields an adversary could directly match to the time in business data field in unmodified form in the public application-level 1071 data with respect to an applicant or related natural person. As noted above, information about time in business is found in many publicly available datasets, including State business registries and commercial databases. Therefore, in many cases, an adversary could use time in business, combined with other fields, to match a section 1071 record to an identified

[849] The commenter did not make clear whether it was referring to competitors of a small business or competitors of a financial institution.

publicly available record. Time in business data may easily produce unique combinations, particularly when combined with other data fields in the public application-level 1071 data, and particularly for larger time in business values, which are more likely to be unique in the dataset.

If the Bureau determines that the time in business data field should be modified, it may consider recoding time in business into bins—for example, using two- or five-year intervals—to reduce the identifiability of a specific length of time in business. The Bureau could also top-code time in business at a value such as 25 years, given that larger values are more likely to be unique. With regard to the industry commenter's recommendation that the Bureau delete time in business from the public application-level 1071 data based on re-identification concerns, the Bureau's determination about whether this field should be modified or deleted will be based on the re-identification analysis that it will conduct once it receives at least a full year of actual data reported by financial institutions.

The Bureau seeks comment on this analysis. The Bureau specifically seeks comment on what intervals the Bureau should use if it were to recode time in business into bins and what value the Bureau should use if it were to top-code this data field.

xvi. Minority-Owned Business Status and Women-Owned Business Status

Proposed § 1002.107(a)(18) and (19) would require financial institutions to collect and report to the Bureau whether the applicant is a minority-owned business or a women-owned business and whether minority-owned business status or women-owned business status is being reported based on previously collected data pursuant to proposed § 1002.107(c)(2).[850]

Disclosing women-owned and minority-owned business status in the public application-level 1071 data in unmodified form is central to furthering the fair lending purpose of section 1071 and would promote the business and community development purpose of the statute by identifying opportunities for further development of women-owned and minority-owned small businesses. In fair lending analyses, knowing whether a business is women-owned or minority-owned would help data users identify potential discriminatory lending patterns. Publishing information on women-owned or minority-owned business status in the public application-level 1071 data would help data users examine and identify potential disparities in small business lending. For example, when combined with action taken, data users would be able to identify if women-owned and minority-owned small businesses are denied for credit at disproportionate rates. In addition, when combined with pricing information, data users would be able to identify if women-owned and minority-owned businesses are receiving credit at higher prices. Additionally, these data would allow communities, governmental entities, and creditors to determine areas where women-owned and minority-owned small businesses are underserved relative to other small businesses and to focus resources to identify business and community development opportunities for women-owned and minority-owned small businesses. Disclosing women-owned and minority-owned business status could also help communities, governmental entities, and creditors determine whether or not initiatives to increase access to credit for women-owned and minority-owned businesses are succeeding.

Disclosing women-owned and minority-owned business status in the 1071 data in unmodified form would likely disclose minimal, if any, information about an applicant or related natural person that may be harmful or sensitive if such person were re-identified, or that may be harmful or sensitive to an identified financial institution. While some applicants or related natural persons may regard this information as harmful or sensitive, the Bureau believes this information generally would present low risk of harm or sensitivity. The Bureau also believes that this information already may be available to the general public, as discussed in the paragraph below, and that this information would have relatively limited utility for adversaries if an applicant or related natural person were re-identified.

However, in many cases, an adversary could use women-owned or minority-owned business status, in combination with other 1071 data, to match a section 1071 record to an identified publicly available record. The Bureau has identified publicly available datasets that include data fields an adversary could directly match to the minority- or women-owned status data fields in unmodified form in the public application-level 1071 data with respect to an applicant or related natural person. Women-owned business status and minority-owned business status is likely to be publicly available for many businesses. Many businesses also publicly register or certify with the SBA or State or local authorities as a women-owned or minority-owned business to access government programs. For example, businesses are identified as woman or minority-owned in the public loan-level SBA 7(a) and PPP data, and demographic status indicators are available in loan-level 8(a) records. Additionally, businesses' websites may have information about their owners that could be used to derive women-owned and minority-owned business status information. Private commercial databases also often contain this information, either imported from public records or estimated using software based on owner names (or both).

The Bureau invites comment on this analysis.

xvii. Ethnicity, Race, and Sex of Principal Owners and Number of Principal Owners

Proposed § 1002.107(a)(20) would require financial institutions to collect and report to the Bureau the ethnicity, race, and sex of the applicant's principal owner(s);[851] whether ethnicity and race are being collected by the financial institution on the basis of visual observation or surname;[852] and whether ethnicity, race, or sex are being reported based on previously collected data pursuant to proposed § 1002.107(c)(2). Unless a financial institution is permitted to report ethnicity, race, and sex information based on previously collected data pursuant to proposed § 1002.107(c)(2), a financial institution must ask an applicant about its principal owners' ethnicity, race, and sex for each application. A financial institution must permit an applicant to

[850] The collection and reporting of women-owned and minority-owned business status is proposed to be based on applicants' self-reporting and would rely on the meanings of ''ownership'' and ''control'' defined in the CDD rule.

[851] Financial institutions would report ethnicity and race using the aggregate categories and disaggregated subcategories listed in proposed comments 107(a)(20)–5 and –6, respectively. Financial institutions would report sex as described in proposed comment 107(a)(20)–7, which prescribes that financial institutions shall report sex using the following categories: ''Male,'' ''Female,'' ''I prefer to self-describe'' (with accompanying free-form text), and ''I do not wish to provide this information.'' The Bureau analyzes free-form text under the proposed balancing test in part VI.C.6.xix below.

[852] Unless a financial institution is permitted to report ethnicity, race, and sex information based on previously provided data pursuant to proposed § 1002.107(c)(2), a financial institution would be required to ask an applicant to report its principal owners' ethnicity, race, and sex for each application. In certain situations, discussed in proposed comments 107(a)(20)–7 and –8 and in proposed appendix G, a financial institution may also be required to report the ethnicity and race of one or more principal owner(s) based on visual observation and/or surname.

refuse to answer the financial institution's inquiry and report its refusal to answer the inquiry, or its failure to respond to the inquiry.

Disclosing the ethnicity, race, and sex of the applicant's principal owner(s) in the public application-level 1071 data in unmodified form would be central to furthering the fair lending purpose of section 1071 and would promote the business and community development purpose of the statute by identifying opportunities for further development of women-owned and minority-owned small businesses. In fair lending analyses, data on the ethnicity, race, and sex of an applicant's principal owner(s) would be used to identify potential risk of discrimination under fair lending laws. These data would be essential for this purpose when analyzed in conjunction with data fields such as action taken, credit amount approved or originated, and pricing. For example, when combined with the type of action taken, ethnicity, race, and sex data of an applicant's principal owner(s) would help data users identify whether women-owned and minority-owned applicants are denied at higher rates on a prohibited basis. In addition, as discussed above with women-owned and minority-owned business status, when combined with pricing information, data on ethnicity, race, and sex of an applicant's principal owner(s) would help data users identify if women-owned and minority-owned businesses are receiving credit at higher prices. In addition, because the Bureau is proposing to require that financial institutions report ethnicity and race using the aggregate categories and disaggregated subcategories listed in proposed comments 107(a)(20)–5 and –6, respectively, such data would enable data users to identify potential discrimination or challenges accessing credit by particular ethnic and racial minorities.

Data on ethnicity, race, and sex of the applicant's principal owner(s) would also be essential for the business and community development purpose of section 1071. These data would allow communities, governmental entities, and creditors to determine areas where women-owned and minority-owned small businesses are underserved relative to other small businesses. In addition, such demographic information about small business applicants would allow communities, governmental entities, and creditors to focus resources to identify business and community development opportunities for women-owned and minority-owned small businesses. For example, in conjunction with NAICS codes, these data would help data users identify challenges facing women-owned businesses and businesses owned by individuals from different ethnic and racial groups in particular industries. This information could also help communities and lenders focus investment and resources in traditionally underserved demographic groups.

In general, disclosing the ethnicity, race, and sex of the applicant's principal owner(s) in the 1071 data in unmodified form would likely disclose minimal, if any information about an applicant or related natural person that may be harmful or sensitive if such person were re-identified, or that may be harmful or sensitive to an identified financial institution. As noted similarly above for the data fields on women-owned and minority-owned business status, while some applicants or related natural persons may regard this information as harmful or sensitive, the Bureau believes this information generally would present low risk of harm or sensitivity. The Bureau also notes that this information may be already available to the general public, and that this information would have relatively limited utility for adversaries if an applicant or related natural person were re-identified.

The Bureau has identified publicly available datasets that include data fields an adversary could directly match to the ethnicity, race, and sex of the applicant's principal owner(s) data fields in unmodified form in the public application-level 1071 data with respect to an applicant or related natural person. Information about the ethnicity, race, and sex of the applicant's principal owner(s) is available to the general public in some datasets.[853] For example, certain State business registries, including those required to access women-owned and minority-owned business programs, provide this information. Other public record databases such as for SBA 8(a) and PPP loan programs also include ethnicity, race, and sex data alongside the borrower's name. Private databases often include information about the owners of businesses, which can be used to estimate ethnicity, race, and sex based on owner name. Therefore, in many cases, an adversary could use the ethnicity, race, and sex of the applicant's principal owner(s), combined with other fields, to directly or indirectly match a section 1071 record to an identified publicly available record.

As discussed in the section-by-section analysis of proposed § 1002.107(a)(20) in part V above, the Bureau is proposing that financial institutions would report sex as described in proposed comment 107(a)(20)–7, which prescribes that financial institutions shall report sex using the following categories: ''Male,'' ''Female,'' ''I prefer to self-describe'' (with accompanying free-form text), and ''I do not wish to provide this information.'' As such, if finalized, the Bureau would permit an applicant to self-describe their sex by selecting ''I prefer to self-describe'' with using free-from text. As discussed in part VI.C.6.xix below, the Bureau is proposing to delete free-form text from the public application-level 1071 data. However, the Bureau seeks comment on whether there are additional specific modifications it should consider with regard to applicants who choose to self-describe their sex.

As discussed in the section-by-section analysis of proposed § 1002.107(a)(20) in part V above, the Bureau is seeking comment in this proposal about the reporting of sexual orientation and gender identity of principal owners—specifically, whether separate questions regarding sex, sexual orientation, and gender identity should be asked and, if so, what categories should be offered on the sample data collection form for use by applicants in responding to each question. The Bureau seeks comment on whether disclosing that one or more principal owners of an applicant has answered any of these questions, and how, could cause heightened sensitivity or risk of harm and whether there are specific modifications the Bureau should consider if such data points are included in the final rule.

The Bureau seeks comment on this analysis.

xviii. Financial Institution Identifying Information

Proposed § 1002.109(b) would require a financial institution to provide the Bureau with certain information with its submission of its small business lending application register: (1) Its name; (2) its headquarters address; (3) the name and business contact information of a person who may be contacted with questions about the financial institution's submission; (4) its Federal prudential regulator, if applicable; (5) its Federal Taxpayer Identification Number; (6) its LEI; (7) its RSSD ID, if applicable; (8)

[853] Regulation B generally prohibits a creditor from inquiring about such protected demographic information in connection with a credit transaction unless otherwise required by Regulation B, ECOA, or other State or Federal law, regulation, order, or agreement. *See* § 1002.5(a)(2). Relatedly, ECOA states that it is not discrimination for a financial institution to inquire about women-owned or minority-owned business status, or the race, sex, and ethnicity of principal owners pursuant to section 1071. 15 U.S.C. 1691(b).

parent entity information,[854] if applicable; (9) the type of financial institution that it is, indicated by selecting the appropriate type or types of institution from the list provided or entering free-form text; [855] and (10) whether the financial institution is voluntarily reporting covered applications for covered credit transactions.

Regulation C requires financial institutions to report similar information when submitting their loan-level HMDA data. Regulation C also requires financial institutions to report the calendar year of submission and the total number of entries in their loan-level HMDA data. Regulation C does not require financial institutions to submit their headquarters address, RSSD ID, or financial institution type or indicate whether they are reporting data voluntarily. With the exception of contact information for a person who can be reached about the financial institution's submission, the information financial institutions are required to submit with their HMDA submissions under § 1003.5(a)(3) is publicly available through the FFIEC website.

*Financial institution identifying information other than individual contact information.* For the reasons described below, the Bureau preliminarily determines that the privacy risks of disclosing the financial institution identifying information data fields in unmodified form, other than data fields containing the information for the financial institution's point of contact for its 1071 data submission (*i.e.,* the name and business contact information of a person who may be contacted with questions about the submission), would be justified by the benefits of disclosure for section 1071's purposes. As such, the Bureau proposes to disclose such information to the public as reported, without modification. The Bureau seeks comment on this determination.

Disclosing the financial institution identifying information, other than individual contact information, in the public application-level 1071 data in unmodified form would facilitate the enforcement of fair lending laws. The purposes of section 1071 in large part concern evaluating the practices of individual financial institutions and disclosing their identifying information allows the public to evaluate their lending practices. Identifying their Federal regulator would also facilitate fair lending enforcement by enabling the public to communicate with the regulator in connection with administrative enforcement of fair lending laws. Disclosing RSSD ID and parent institution information would enable the public to map corporate relationships for financial institutions, which is also important for fair lending enforcement.

Disclosing financial institution identifying information, including financial institution type, would enable the public to evaluate which financial institutions are reaching underserved areas of the market and the extent to which different types of financing is available from different types of institutions. And as described more fully in the section-by-section analysis of proposed § 1002.109(b) above, financial institution identifying information would promote the fair lending and community and business development purposes of the statute by allowing users to identify financial institutions precisely and draw appropriate conclusions from the data.

Several SERs and industry commenters expressed concern that disclosing financial institution identifying information would lead to frivolous litigation and unfounded reputational risks, and would increase the cost of credit or limit credit availability for small businesses.[856]

Disclosing financial institution identifying information in the 1071 data in unmodified form would likely disclose minimal, if any, information about an applicant or related natural person that may be harmful or sensitive if such person were re-identified. While some businesses might view their identification as an applicant as harmful or sensitive, the Bureau does not believe revealing the name of the financial institution would significantly increase such risks. In addition, this information is already largely available from other identified public records, such as UCC filings. For the same reason, the Bureau does not believe revealing the name of the financial institution would significantly increase risk of fraud or identity theft to businesses or related natural persons caused by adversaries impersonating the financial institution.

Disclosing financial institution identifying information in the 1071 data in unmodified form would not, by itself, reveal information that is harmful or sensitive, given financial institutions' commercial interests. Additionally, other public records, such as public HMDA data, tax records, and commercial databases disclose Federal Taxpayer Identification number, RSSD ID, and LEI.[857] Disclosing financial institution identifying information in unmodified form may reveal information that financial institutions regard as harmful or sensitive, but, as discussed under *Risk of Harm or Sensitivity* in part VI.C.4.ii above, the Bureau does not believe that disclosure of the information in the public application-level 1071 data would permit the reverse-engineering of a financial institution's proprietary lending models. The Bureau acknowledges, however, that this information could, in some circumstances, lead to reputational risks and increased costs for financial institutions, which might be passed on to their customers in the form of increased costs or decreased access to credit.

Several SERs were concerned that publishing financial institution identifying information could increase re-identification risk of applicants and related natural persons.[858] One industry stakeholder provided feedback that customers of captive wholesale finance companies with applicant bases limited to franchises or licensees of a particular distributor or manufacturer would face unique re-identification risks. The commenter explained that, in many instances, these applicants may be the financial institution's only customer in a particular State, or one of only a very small number of customers in the State, heightening the privacy concerns for publication of data tied to these financial institutions.

The Bureau has identified publicly available datasets that include data fields an adversary could directly match

[854] Parent entity information would include the name of the immediate parent entity, the LEI of the immediate parent entity, if available, the RSSD ID number of the immediate parent entity, if available, the name of the top-holding parent entity, the LEI of the top-holding parent entity, if available, and the RSSD ID number of the top-holding parent entity, if available.

[855] The list would include the following types: Bank or savings association, minority depository institution, credit union, nondepository institution, community development financial institution (CDFI), other nonprofit financial institution, Farm Credit System institution, government lender, commercial finance company, equipment finance company, industrial loan company, fintech, and ''other'' (reported as free-form text). The Bureau analyzes free-form text under the proposed balancing test in part VI.C.6.xix below.

[856] One industry commenter stated that financial institutions might respond to perceived reputational risks by eliminating certain product offerings or modifying underwriting practices in a way that reduces the overall diversity of small business products.

[857] The FFIEC publishes transmittal sheet information, including LEI and Federal Taxpayer Identification number, on its website. Fed. Fin. Insts. Examination Council, *Public Transmittal Sheet—Schema, https://ffiec.cfpb.gov/documentation/2020/public-ts-schema/* (last visited July 23, 2021).

[858] *See* SBREFA Panel Report at 34.

to financial institution identifying information data fields in unmodified form in the public application-level 1071 data with respect to an applicant or related natural person. Other identified public records, such as UCC filings, disclose financial institution name. Therefore, in many cases, an adversary could use identifying financial institution data fields, combined with other 1071 data fields, to match a section 1071 record to an identified public record. Because the Bureau does not intend to perform a re-identification analysis of the 1071 data fields until 1071 data are reported, it has not determined the extent to which financial institution identifying information or other data fields could contribute to record uniqueness.[859]

With respect to concerns raised regarding captive wholesale finance companies, the Bureau acknowledges that financial institution identifying information in unmodified form in the public application-level 1071 data could, in combination with other data fields like census tract, NAICS codes, and credit type or purpose, facilitate re-identification of applicants that have a common name, without requiring that adversaries match 1071 records to other identified datasets. As discussed in the section-by-section analysis of proposed § 1002.104(b) above, the Bureau proposes to exclude trade credit and other transactions from the scope of covered credit transactions. This might eliminate some transactions involving such lenders. The Bureau seeks comment on the circumstances under which a transaction involving a captive wholesale finance company would be covered by the proposal notwithstanding the exemption.

To the extent there are such transactions, the Bureau seeks comment on the instances in which captive wholesale finance companies lend *exclusively* to businesses that are publicly branded in a way that can be easily matched to the identity of the financial institution. As discussed in the section-by-section analysis of proposed § 1002.109(b) above, the Bureau also seeks comment on whether a final rule could include certain categories of financial institution types that would allow the Bureau to easily identify such financial institutions in the unmodified 1071 dataset without an application-level analysis. Finally, the Bureau seeks comment on whether there are particular modification techniques that would reduce re-identification risks and risks of harm or sensitivity for applicants and related natural persons who might be re-identified in the public application-level 1071 data.

The Bureau has considered whether a modification of the 1071 data available to the public short of deleting financial institution identifying information (other than individual contact information) would appropriately balance identified privacy risks and disclosure benefits of this data field. Several SERs stated that a solution to their concerns about financial institution privacy would be for the Bureau not to release the names of financial institutions when publishing 1071 data.[860]

The Bureau proposes to disclose financial institution identifying information, other than individual contact information, to the public as reported, without modification. The Bureau preliminarily determines that risks to privacy interests from the disclosure of this data field in unmodified form would be justified by the benefits of disclosure for section 1071's purposes. As described above, while the Bureau has not conducted a uniqueness analysis, it is very likely that disclosure of financial institution identifying information would substantially facilitate the re-identification of applicants or related natural persons. If such persons were re-identified, disclosure of other 1071 data fields would likely create a risk of harm or sensitivity. In addition, the disclosure of other proposed 1071 data fields in combination with identifying financial institution name likely would reveal information that may be harmful or sensitive to financial institutions. The Bureau nonetheless determines that these risks to privacy would be justified by the benefits of disclosure in light of section 1071's purposes.

The Bureau also seeks comment on this analysis and its proposal to disclose these fields without modification in the public application-level 1071 data.

*Individual contact information.* Proposed § 1002.109(b)(1)(iii) would require financial institutions to report the name and business contact information of a person who may be contacted with questions about the financial institution's submission. In contrast to the other financial institution identifying information described above, the Bureau preliminarily determines that the privacy risks of disclosure in unmodified form of this data field would not be justified by the benefits of disclosure for section 1071's purposes. As such, the Bureau proposes to delete such information from the publicly available data. The Bureau seeks comment on this determination.

Disclosing individual contact information in the public application-level 1071 data in unmodified form would enable the public to contact natural persons at financial institutions about the technical aspects of a financial institution's submission of application-level data. However, the Bureau does not believe this would promote the fair lending or community or business development purposes of section 1071 because the Bureau, not the general public, will coordinate with this person to ensure proper submission of data. Moreover, the person designated by the financial institution to respond to questions about the submission might not necessarily be designated by the financial institution for engaging with the general public.

Disclosing individual contact information in the 1071 data in unmodified form would likely not disclose any information about an applicant or related natural person if such person were re-identified. However, disclosing the name and contact information of natural persons designated by the financial institution would disclose information that may be harmful or sensitive to identified financial institutions and its employees. Financial institutions have a legitimate interest in protecting the identities of their employees from the public, consistent with their job functions, and persons identified for purposes of questions about the financial institution's submission to the Bureau might not necessarily be responsible for engaging with the general public.

The Bureau has considered whether a modification of the 1071 data available to the public other than exclusion of individual contact information would appropriately balance identified privacy risks and disclosure benefits of this data field. Because disclosure of this data field in unmodified form would not promote the purposes of section 1071 and would likely reveal information that would be harmful or sensitive to a financial institution and its employees, the Bureau does not believe there is a modification that would appropriately balance the privacy risks and disclosure benefits for this data field. Accordingly, the Bureau preliminarily determines that deleting individual contact information would appropriately balance the privacy risks and disclosure benefits of this data field.

[859] As discussed under *Balancing Test Design* in part VI.C.1 above, while the proposed balancing test would consider the risk of harm or sensitivity to financial institutions, it would not consider re-identification risk with respect to financial institutions because the statute contemplates the disclosure of their identity.

[860] *See* SBREFA Panel Report at 36.

The Bureau seeks comment on this analysis as well as its proposed deletion.

xix. Free-Form Text

Proposed § 1002.107(a) would require financial institutions to use free-form text to report certain data fields where a financial institution reports information that is not included in a list of data fields provided. Under proposed § 1002.107(a)(5), (6), (11), (12), and (20), free-form text could be used to report credit type (product and guarantee information); credit purpose; denial reasons; pricing (the interest rate index used); and ethnicity, race, and sex.[861] Financial institutions also would have flexibility in describing identifying information that would be provided under proposed § 1002.109(b). Free-form text used to report ethnicity, race, and sex would be completed based on information provided by applicants; all other free-form text would be completed based on information provided by the financial institution.

Free-form text would allow the reporting of any information, including information that may be harmful or sensitive to applicants, related natural persons, and possibly the interests of financial institutions. Such information might also create a significant risk of re-identification for applicants or related natural persons. Given the expected amount of 1071 data reported each year, it will not be feasible for the Bureau to review the free-form text submitted before publishing the application-level 1071 data. The Bureau believes at this time that, under the balancing test, deleting free-form text from the public application-level 1071 data, other than with respect to the financial institution identifying information described in part VI.C.6.xviii above, would appropriately balance the benefits of disclosure with the risks to the privacy interests of applicants, related natural persons, and financial institutions.

The Bureau seeks comment on this analysis as well as its proposed deletion.

## VII. Dodd-Frank Act Section 1022(b)(2) Analysis

The Bureau is considering the potential benefits, costs, and impacts of the proposed rule. The Bureau requests comment on the preliminary discussion presented below, as well as submissions of additional data that could inform the Bureau's consideration of the benefits, costs, and impacts of the proposed rule. In developing the proposed rule, the Bureau has consulted with or offered to consult with the prudential regulators (the Board of Governors of the Federal Reserve System, the Federal Deposit Insurance Corporation, the National Credit Union Administration, and the Office of the Comptroller of the Currency), the Department of Agriculture, the Department of Housing and Urban Development, the Department of Justice, the Department of the Treasury, the Economic Development Administration, the Farm Credit Administration, the Federal Trade Commission, the Financial Crimes Enforcement Network, the Minority Business Development Agency, and the Small Business Administration regarding, among other things, consistency with any prudential, market, or systemic objectives administered by such agencies.

In the Dodd-Frank Act, which was enacted ''[t]o promote the financial stability of the United States by improving accountability and transparency in the financial system,'' Congress directed the Bureau to adopt regulations governing the collection of small business lending data. Under section 1071, covered financial institutions must compile, maintain, and submit certain specified data points regarding applications for credit for women-owned, minority-owned, and small businesses, along with ''any additional data that the Bureau determines would aid in fulfilling the purposes of [section 1071].'' Under the proposed rule, covered financial institutions would be required to collect and report the following data points: (1) A unique identifier, (2) application date, (3) application method, (4) application recipient, (5) credit type, (6) credit purpose, (7) amount applied for, (8) amount approved or originated, (9) action taken, (10) action taken date, (11) denial reasons, (12) pricing information, (13) census tract, (14) gross annual revenue, (15) NAICS code, (16) number of workers, (17) time in business, (18) minority-owned business status, (19) women-owned business status, (20) ethnicity, race, and sex of principal owners, and (21) the number of principal owners.

Under the proposed rule, financial institutions would be required to report data on small business credit applications under section 1071 if they originated at least 25 covered credit transactions in each of the two preceding calendar years. The Bureau is proposing to define an application as an oral or written request for a covered credit transaction that is made in accordance with the procedures used by a financial institution for the type of credit requested, with some exceptions. The Bureau is proposing to define the term covered credit transaction as an extension of business credit that is not an excluded transaction. Loans, lines of credit, credit cards, and merchant cash advances (including such credit transactions for agricultural purposes and those that are also covered by HMDA[862] (that is, HMDA-reportable transactions)) would all fall within the transactional scope of this proposed rule. The Bureau is broadly proposing to not cover the following types of transactions: Factoring, leases, consumer-designated credit used for business purposes, credit secured by certain investment properties, trade credit, public utilities credit, securities credit, and incidental credit. Additionally, the Bureau is proposing that a business is a small business if and only if its gross annual revenue for its preceding fiscal year is $5 million or less.

### *A. Statement of Need*

Congress directed the Bureau to adopt regulations governing the collection of small business lending data. Specifically, section 1071 of the Dodd-Frank Act amended ECOA to require financial institutions to compile, maintain, and submit to the Bureau certain data on applications for credit for women-owned, minority-owned, and small businesses. Congress enacted section 1071 for the purpose of facilitating enforcement of fair lending laws and enabling communities, governmental entities, and creditors to identify business and community development needs and opportunities of women-owned, minority-owned, and small businesses. The Bureau is issuing this proposed rule to implement the section 1071 mandate.

Small businesses play a key role in fostering community development and fueling economic growth both nationally and in their local communities.[863] However, comprehensive data on loans to small businesses currently are limited. The largest sources of information on lending by depository institutions are the FFIEC and NCUA Call Reports and reporting under the CRA. Under the FFIEC Call Report and CRA reporting regimes, small loans to businesses of any size are used in whole or in part as a proxy for loans to small businesses. The FFIEC Call Report captures banks'

[861] For example, the proposal would require financial institutions to report credit purpose by choosing one or more purposes from a specified list. Financial institutions selecting ''other'' would be required to report that other purpose as free-form text.

[862] 12 U.S.C. 2801 *et seq.*

[863] *See generally* White Paper.

and savings associations' total outstanding number and amount of small loans to businesses (that is, loans originated under $1 million to businesses of any size; small loans to farms are those originated under $500,000) by institution.[864] The CRA requires banks and savings associations with assets over a specified threshold (currently $1.305 billion) to report data on loans to businesses with origination amounts of $1 million or less; reporters are asked to indicate whether the borrower's gross annual revenue is $1 million or less, if they have that information.[865] Under the CRA, banks and savings associations report aggregate numbers and values of originations at an institution level and at various geographic levels. The NCUA Call Report captures credit unions' total originations, but not applications, on all loans over $50,000 to members for commercial purposes, regardless of any indicator about the business's size.[866] Some federally funded loan programs, such as the SBA's 7(a) or 504 programs and the CDFI Fund require reporting of loan-level data, but only for loans that received support under those programs. Nondepository institutions do not report small business lending applications under any of these reporting regimes. There are no similar sources of information about lending to small businesses by nondepository institutions.

There are also a variety of non-governmental data sources, issued by both private and nonprofit entities, that cover small businesses and/or the small business financing market. These include datasets and surveys published by commercial data and analytics firms, credit reporting agencies, trade associations, community groups, and academic institutions. See part II.B for additional information on these sources. While these non-public sources of data on small businesses may provide a useful supplement to existing Federal sources of small business lending data, these private and nonprofit sources often do not have lending information, may rely on unverified research based on public internet sources, and/or narrowly limit use cases for parties accessing data. Further, commercial datasets are generally not free to public users and can be costly, raising equity issues for stakeholders who cannot afford access.

Under the proposed rule, covered financial institutions would be required to compile, maintain, and submit data regarding the race, sex, and ethnicity of the principal owners of the business and whether a small business is women-owned or minority-owned. No other source of data comprehensively collects this type of demographic information on small business loan applications.

Section 1071 requires financial institutions to report detailed application-level data to the Bureau, and to make it available to the public upon request. Such information will constitute a public good that illuminates the lending activities of financial institutions and the small business lending market in general. In particular, the public provision of application-level data will: (1) Provide small businesses and financial institutions with additional information to improve credit market outcomes and (2) allow members of the public, public officials, and other stakeholders to better assess compliance with antidiscrimination statutes.

First, the data made public pursuant to the proposed rule will provide information that could help to improve credit outcomes in the small business lending market. As discussed above, market-wide data on small business credit transactions is currently limited. Neither the public nor private sectors provide extensive data on credit products or terms. Small business owners have access to very little information on typical rates or products offered by different lenders. As a result, small business owners are limited in their ability to shop for the credit product that best suits their needs at the best price. The information made public pursuant to the proposed rule will provide extensive data on product types and credit terms that community development groups or commercial services could use to provide better information to small businesses. For example, a commercial provider could provide small businesses with information on what products lenders typically offer and at what rates. These data will allow small business owners to more easily compare credit terms and evaluate credit alternatives. By engaging in more informed shopping, small business owners may achieve better credit outcomes.

Furthermore, financial institutions can analyze data to understand small business lending market conditions and determine how best to provide credit to borrowers. However, financial institutions are not able to conduct very granular or comprehensive analyses because the data on small business lending are limited. The data made public pursuant to the proposed rule will allow financial institutions to better understand the demand for small business credit products and the conditions under which they are being supplied by other covered financial institutions. The data will help enable institutions to identify potentially profitable opportunities to extend credit. Small business owners, as a result, could benefit from increased credit availability.

Second, while data made public pursuant to the proposed rule may not constitute conclusive evidence of credit discrimination on its own, the data will enable members of the public, regulators, and other stakeholders to better assess compliance with antidiscrimination statutes. Application-level data that include information on business owners' race, sex, and ethnicity, as well as whether the business is women- or minority-owned, are necessary for the public to evaluate a lender's practices for potential risks of violating antidiscrimination statutes. However, as described above, there are currently no application-level data comprehensive enough or that contain the required demographic information to enable the public to conduct these kinds of analyses. The data made public pursuant to the proposed rule will be comprehensive and contain the necessary data fields for such analysis. Users will be able to examine whether, for example, a lender denies applications from women- or minority-owned businesses at higher rates than those that are not or whether these businesses are charged higher prices. This kind of transparency can place appropriate pressure on lenders to ensure that there is equity in their credit provision. Additionally, data collected under the proposed rule will contain the data fields that allow users to conduct more accurate fair lending analyses by comparing applications for credit products with similar characteristics.

*B. Baseline for the Consideration of Costs and Benefits*

The Bureau has discretion in any rulemaking to choose an appropriate scope of consideration with respect to potential benefits and costs and an appropriate baseline. The Bureau

[864] *See* FFIEC Call Report at Schedule RC–C Part II.

[865] *See* 2015 FFIEC CRA Guide at 11, 13. Small business loans are defined for CRA purposes as loans whose original amounts are $1 million or less and that were reported on the institution's Call Report or Thrift Financial Report (TFR) as either ''Loans secured by nonfarm or nonresidential real estate'' or ''Commercial and industrial loans.'' Small farm loans are defined for CRA purposes as loans whose origination amounts are $500,000 or less and were reported as either ''Loans to finance agricultural production and other loans to farmers'' or ''Loans secured by farmland.''

[866] *See* Nat'l Credit Union Admin., *Call Report Form 5300* (June 2020), *https://www.ncua.gov/files/publications/regulations/form-5300-june-2020.pdf.*

interpreted section 1071 to mean that obligations for financial institutions to collect, maintain, and submit data ''do not arise until the Bureau issues implementing regulations and those regulations take effect.'' [867] Accordingly, this analysis considers the benefits, costs, and impacts of the major provisions of the proposed rule against a pre-section 1071 rule baseline, *i.e.,* the current state of the world before the Bureau's section 1071 rule is implemented. Under this baseline, the Bureau assumes that institutions are complying with regulations that they are currently subject to, including reporting data under HMDA and CRA. The Bureau believes that such a baseline will also provide the public with better information about the benefits and costs of this rule.

*C. Basic Approach of the Bureau's Consideration of Benefits and Costs and Data Limitations*

Pursuant to section 1022(b)(2)(A) of the Dodd-Frank Act,[868] in prescribing a rule under the Federal consumer financial laws (which include ECOA and title X of the Dodd-Frank Act), the Bureau is required to consider the potential benefits and costs to ''consumers'' and ''covered persons,'' including the potential reduction of access by consumers to consumer financial products or services resulting from such rule, and the impact of proposed rules on covered persons as described under section 1026 of the Dodd-Frank Act [869] (*i.e.,* depository institutions and credit unions with $10 billion or less in total assets), and the impact on consumers in rural areas.

As mentioned above, section 1022(b)(2)(A) refers to ''consumers'' and ''covered persons''; the Dodd-Frank Act defines the term ''consumer'' as an individual or someone acting on behalf of an individual, while a ''covered person'' is one who engages in offering or providing a ''consumer financial product or service,'' which means a financial product or service that is provided to consumers primarily for ''personal, family, or household purposes.'' [870] In the 1071 rulemaking, however, the only parties directly affected by the rule are small businesses (rather than individual consumers) and the financial institutions from whom they seek credit (rather than covered persons). Accordingly, a section 1022(b)(2)(A) analysis that considers only the costs and benefits to individual consumers and to covered persons would not meaningfully capture the costs and benefits of the rule.

Below, the Bureau conducts the statutorily required analysis with respect to the rule's effects on consumers and covered persons. Additionally, the Bureau is electing to conduct this same analysis with respect to small businesses and the financial institutions required to compile, maintain, and submit data fields under the proposed rule. This discussion relies on data that the Bureau has obtained from industry, other regulatory agencies, and publicly available sources. However, as discussed further below, the data limit the Bureau's ability to quantify the potential costs, benefits, and impacts of the proposed rule.

1. Analysis With Respect to Consumers and Covered Persons

The proposed rule implements a data collection regime in which certain covered financial institutions must compile, maintain, and submit data with respect to applicants for credit for small businesses. The rule does not directly impact consumers or consumers in rural areas, as those terms are defined by the Dodd-Frank Act. Some covered persons, including some that are depository institutions or credit unions with $10 billion or less in total assets, will be directly affected by the rule not in their capacity as covered persons (*i.e.,* as offerors or providers of consumer financial products or services) but in their separate capacity as covered financial institutions that offer commercial credit. The costs, benefits, and impact of the rule on those entities are discussed below.

2. Costs to Covered Financial Institutions

Regarding the costs to covered financial institutions, the proposed rule generally establishes which financial institutions, transactions, and data points would be covered under section 1071. In order to precisely quantify the costs to covered financial institutions, the Bureau would need representative data on the operational costs that financial institutions would incur to gather and report 1071 data, one-time costs for financial institutions to update or create reporting infrastructure in response to the proposed rule, and information on the level of complexity of financial institutions' business models and compliance systems. Currently, the Bureau does not believe that data on section 1071 reporting costs with this level of granularity are systematically available from any source. The Bureau has made reasonable efforts to gather data on section 1071 reporting costs. Through outreach efforts with industry, community groups, and other regulatory agencies, the Bureau has obtained some information about potential ongoing operational and one-time compliance costs, and the discussion below uses this information to quantify certain costs of the proposed rule. The Bureau believes that the discussion constitutes the most comprehensive assessment to date of the potential costs of section 1071 reporting by financial institutions. However, the Bureau recognizes that these estimations may not fully quantify the costs to covered financial institutions, especially given the wide variation of section 1071 reporting costs among financial institutions. The Bureau continues to seek data from available sources in order to better quantify the costs to covered financial institutions.

The Bureau categorizes costs required to comply with the proposed rule into ''one-time'' and ''ongoing'' costs. ''One-time'' costs refer to expenses that the financial institution would incur initially and only once to implement changes required in order to comply with the requirements of the new rule. ''Ongoing'' costs are expenses incurred as a result of the ongoing reporting requirements of the rule, accrued on an annual basis. In considering the costs and impacts of the proposed rule, the Bureau has engaged in a series of efforts to estimate the cost of compliance by covered entities. The Bureau conducted a One-Time Cost Survey, discussed in more detail in part VII.E.1 below, to learn about the one-time implementation costs associated with implementing section 1071 and adapted ongoing cost calculations from previous rulemaking efforts. The Bureau evaluated the potential one-time costs of implementing the procedures necessary and the potential ongoing costs of annually reporting under the proposed rule in part VII.F.3 below. The discussion below provides details on the Bureau's approach in performing these institution-level analyses. The Bureau realizes that costs vary by institution due to many factors, such as size, operational structure, and product complexity, and that this variance exists on a continuum that is impossible to fully represent. In order to conduct a cost consideration that is both practical and meaningful, the Bureau has chosen an approach that focuses on three

[867] *See* Letter from Leonard Kennedy, General Counsel, CFPB, to Chief Executive Officers of Financial Institutions under Section 1071 of the Dodd-Frank Act (Apr. 11, 2011), *https://files.consumerfinance.gov/f/2011/04/GC-letter-re-1071.pdf.*

[868] 12 U.S.C. 5512(b)(2)(A).

[869] 12 U.S.C. 5516.

[870] 12 U.S.C. 5481(4) through (6).

representative types of financial institutions. For each type, the Bureau has produced reasonable estimates of the costs of compliance given the limitations of the available data. Part VII.F.3 below provides additional details on this approach. More elaboration is available in the SBREFA Outline and the SBREFA Panel Report.

3. Costs to Small Businesses

The Bureau has estimated the costs to small businesses in addition to those for covered financial institutions. The Bureau expects the direct costs of the proposed rule to small businesses will be negligible, especially compared to the overall cost of credit. Therefore, the Bureau focuses its analysis on whether and how the Bureau expects financial institutions to pass on the costs of compliance with the proposed rule to small businesses and any possible effects on the availability of small business credit. According to economic theory, in a competitive framework where financial institutions are profit maximizers, the affected financial institutions would pass on to small business applicants the marginal (*i.e.,* variable) cost per application or origination, and either absorb the one-time and increased fixed costs of complying with the rule or exit the market if the one-time and fixed costs are sufficiently high. As discussed below, the Bureau estimates that these costs would be relatively low. Further, the Bureau received feedback through the One-Time Cost Survey process on how creditors might react to increased compliance costs due to the proposed rule. The results generally suggest that covered financial institutions will generally pass the increased cost of compliance on to small businesses and would not exit the market. The Bureau received similar feedback during the SBREFA process.

4. Benefits to Small Businesses and Covered Financial Institutions

Quantifying benefits to small businesses presents substantial challenges. As discussed above, Congress enacted section 1071 for the purpose of facilitating enforcement of fair lending laws and enabling communities, governmental entities, and creditors to identify business and community development needs and opportunities of women-owned, minority-owned, and small businesses. The Bureau is unable to readily quantify any of these benefits with precision, both because the Bureau does not have the data to quantify all benefits and because the Bureau is not able to assess completely how effective the implementation of section 1071 will be in achieving those benefits. The Bureau believes that its proposals appropriately implement the statutory mandate of section 1071 to effectuate the section's stated purposes. As discussed further below, as a data reporting rule, most provisions of the proposal would benefit small businesses in indirect ways. Nevertheless, the Bureau believes that the impact of enhanced transparency would substantially benefit small businesses. For example, the proposed rule would facilitate the detection (and thus remediation) of discrimination; promote public and private investment in certain under-served markets; and promote competitive markets. Quantifying and monetizing these benefits would require identifying all possible uses of section 1071 data, establishing causal links to the resulting public benefits, and then quantifying the magnitude of these benefits. The Bureau seeks comment on whether there are additional data sources available regarding the benefits to small businesses of the proposed rule. The Bureau is particularly interested in the quantifiable impact of increased transparency on financial institution behavior, and the need for public and private investment. The Bureau is unaware of data that would enable reliable quantitative estimates of all of these effects.

Similar issues arise in attempting to quantify the benefits to covered financial institutions. Certain benefits to covered financial institutions are difficult to quantify. For example, the Bureau believes that the section 1071 data will reduce the compliance burden of fair lending reviews for lower risk financial institutions by reducing the ''false positive'' rates during fair lending prioritization by regulators. The Bureau also believes that data made public pursuant to the proposed rule will allow financial institutions to better understand the demand for small business credit products and the conditions under which they are being supplied by other covered financial institutions. The Bureau believes that such benefits to financial institutions could be substantial. Nevertheless, quantifying them would require data that are currently unavailable.

In light of these data limitations, the discussion below generally provides a qualitative consideration of the benefits and impacts of the proposed rule. General economic principles, together with the limited data available, provide insight into these benefits and impacts. Where possible, the Bureau makes quantitative estimates based on these principles and the data that are available. The Bureau seeks comment on the appropriateness of the approach described above, including additional data relevant to the benefits to small businesses and covered financial institutions.

*D. Coverage of the Proposed Rule*

The proposed rule provides that financial institutions (both depository and nondepository) that meet all the other criteria for a ''financial institution'' in proposed § 1002.105(a) would only be required to collect and report section 1071 data if they originated at least 25 covered credit transactions in each of the two preceding calendar years. See proposed § 1002.105(b).

As discussed above, market-wide data on small business lending are currently limited. The Bureau is unaware of any comprehensive data available on originations for all financial institutions, which would be needed in order to precisely identify all institutions covered by the rule. To estimate coverage of the proposed rule, the Bureau uses publicly available data for two groups of financial institutions: Depository and nondepository institutions.

To estimate coverage of depository institutions, the Bureau relies on NCUA Call Reports to estimate coverage for credit unions, including for those that are not federally insured, and FFIEC Call Reports and the CRA data to estimate coverage for banks and savings associations. For the purposes of the analysis in this part VII, the Bureau estimates the number of depository institutions that would have been required to report in 2019, based on the estimated number of originations of covered products for each institution in 2017 and 2018.[871] The Bureau accounts for mergers and acquisitions between 2017 and 2019 by assuming that any depository institutions that merged in those years report as one institution.

As discussed above, the NCUA Call Report captures data on all loans over $50,000 to members for commercial purposes, regardless of any indicator about the business's size and including number and dollar value of originations. For the purposes of estimating the impacts of the proposed rule, the Bureau uses the annual number of originated commercial loans to members reported by credit unions as a proxy for the annual number of originated covered credit transactions under the

[871] The Bureau uses 2019 instead of 2020 to estimate coverage during a year unaffected by pandemic conditions.

proposed rule.[872] These are the best data available for estimating the number of credit unions that may be covered by the proposed rule. However, the Bureau acknowledges that the true number of covered credit unions may be different than what is presented here. For example, this proxy may overestimate the number of credit unions that would be covered if some commercial loans to members are not covered because the member is taking out a loan for a large business. Alternatively, this proxy may underestimate the number of credit unions that would be covered by the proposed rule if credit unions originate a substantial number of covered credit transactions with origination values under $50,000.

As discussed above, the FFIEC Call Report captures banks' and savings associations' outstanding number and amount of small loans to businesses (*i.e.,* loans originated under $1 million to businesses of any size; small loans to farms are those originated under $500,000). The CRA requires banks and savings associations with assets over a specified threshold ($1.322 billion as of 2021) [873] to report loans to businesses in original amounts of $1 million or less. For the purposes of estimating the impacts of the proposed rule, the Bureau follows the convention of using small loans to businesses as a proxy for loans to small businesses and small loans to farms as a proxy for loans to small farms.[874] These are the best data available for estimating the number of banks and savings associations that may be covered by the proposed rule. However, the Bureau acknowledges that the true number of covered banks and savings associations may be different than what is presented here. For example, this proxy would overestimate the number of banks and savings associations covered by the rule if a significant number of small loans to businesses and farms are to businesses or farms that are considered large under the definition of a small business in the proposed rule. Alternatively, this proxy would underestimate the number of banks and savings associations covered by the rule if a significant number of businesses and farms that are small under the proposed rule take out loans that are larger than $1 million or $500,000, for businesses and farms, respectively.

Although banks and savings associations reporting under the CRA are required to report the number of originations of small loans to businesses and farms, the Bureau is not aware of any comprehensive dataset that contains originations made by banks and savings associations below the CRA reporting threshold. To fill this gap, the Bureau simulated plausible values for the annual number and dollar value of originations for each bank and savings association that falls below the CRA reporting threshold for 2017, 2018, and 2019.[875] The Bureau generated simulated originations in order to account for the uncertainty around the exact number and value of originations for these banks and saving associations. To simulate these values, the Bureau assumes that these banks have the same relationship between outstanding and originated small loans to businesses and farms as banks and savings associations above the CRA reporting threshold. First, the Bureau estimated the relationship between originated and outstanding numbers and balances of small loans to businesses and farms for CRA reporters. Then the Bureau used this estimate, together with the outstanding numbers and balances of small loans to businesses and farms of non-CRA reporters, to simulate these plausible values of originations. The Bureau has documented this methodology in more detail in its *Supplemental estimation methodology for institutional coverage and market-level cost estimates in the small business lending data collection notice of proposed rulemaking* released concurrently with this proposal.[876]

Below, the Bureau reports a range of values for the estimated number of depository institutions covered under the proposed rule. The range represents a 95 percent confidence interval over the number of credit unions, banks and savings associations that would be covered under the proposed rule. The Bureau presents this range to reflect the uncertainty associated with the estimate and notes that the uncertainty is driven by the lack of data on originations by banks and savings associations below the CRA reporting threshold.

The Bureau estimates that about 992 nondepository institutions will be covered by the proposed rule: About 340 nondepository CDFIs; about 100 MCA providers; about 30 fintech companies; about 300 commercial finance companies; about 100 governmental lending entities; about 50 nondepository mortgage providers; and 72 Farm Credit System members.[877] See part II.D above for more detail on how the Bureau arrived at these estimates.

Based on 2019 data from FFIEC and NCUA Call Reports and the CRA data, using the methodology described above, the Bureau estimates that the number of depository institutions that would be required to report under the proposed rule would be between approximately 4,000 and 4,200. The Bureau estimates that between 3,600 and 3,800 banks and savings associations and about 400 credit unions would be required to report under the proposed rule.

The Bureau has attempted to use the best available data and methods to estimate the number of financial institutions that would be covered by the proposed rule. The Bureau seeks comment on whether there are additional data sources that could provide better estimates of coverage. The Bureau also seeks comment on its *Supplemental estimation methodology for institutional coverage and market-level cost estimates in the small business lending data collection notice of proposed rulemaking* describing the methods used to estimate coverage.

[872] For this analysis, the Bureau includes all types of commercial loans to members except construction and development loans. This includes loans secured by multifamily residential property; loans secured by farmland; loans secured by owner-occupied, non-farm, non-residential property; loans secured by non-owner occupied, non-farm, non-residential property; loans to finance agricultural production and other loans to farmers; commercial and industrial loans; unsecured commercial loans; and unsecured revolving lines of credit for commercial purposes.

[873] *See* Fed. Fin. Insts. Examination Council, *Community Reinvestment Act, 2021 Reporting Criteria* (Dec. 16, 2020), *https://www.ffiec.gov/cra/reporter21.htm.*

[874] The FFIEC Call Reports do not collect information on small loans to businesses made for the purposes of funding multifamily property. In order to account for these loans in the coverage estimates, for each bank or savings association, the Bureau adds the number of multifamily loans originated for business purposes with origination amounts under $1 million reported in the HMDA data to the estimated number of small business lending originations. While multifamily loans for business purposes have been reportable in HMDA data for some time, these loans have only been identifiable with data fields available since 2018. For simplicity, the Bureau assumes that a bank or savings association made the same number of multifamily loans for business purposes with origination amounts under $1 million in 2017 as it did in 2018.

[875] Based on FFIEC Call Report data as of December 2019, of the 5,177 banks and savings associations that existed in 2019, only about 11 percent were required to report under CRA. That is, only about 11 percent of banks and savings associations had assets below $1.284 billion, the CRA reporting threshold in 2019. *See* Fed. Fin. Insts. Examination Council, *2019 Reporting Criteria, https://www.ffiec.gov/cra/reporter19.htm* (last visited Aug. 5, 2021).

[876] This document is available at *https://www.consumerfinance.gov/data-research/research-reports/supplemental-estimation-methodologies-small-business-lending-data-collection-nprm/.*

[877] The Bureau provides estimates for the majority of nondepository institutions but knows an exact number of members of the Farm Credit System.

*E. Methodology for Generating Cost Estimates*

The Bureau used previous HMDA rulemaking estimates as the basis for its review of 1071 data collection and reporting tasks that would impose one-time and ongoing costs. In developing its ongoing cost methodology to estimate the impacts of its 2015 HMDA final rule, the Bureau used interviews with financial institutions to understand the processes of complying with a regulation that requires collecting and reporting credit application data and to generate estimates of how changes to the reporting requirements would impact the ongoing costs of collecting and reporting mortgage application data.[878] To analyze the potential impacts of this proposed rule, the Bureau adapted its methodology from its HMDA rulemaking activities to the small business lending market.

The Bureau expects that the tasks required for data collection, checking for accuracy, and reporting under the proposed rule would be similar to those under HMDA. The similarities in data collection and reporting tasks allowed the Bureau to leverage its previous rulemaking experience in its analysis of the potential impacts of this proposed rule.

However, there are significant differences between the home mortgage and small business lending market. For example, small business lending is generally less automated, and has a wider variety of products, smaller volumes, and smaller credit amounts. The Bureau used the SBREFA process, research using publicly available information, and the Bureau's general expertise regarding the small business lending market to determine how these differences would change the tasks required for data collection, checking for accuracy, and reporting.

During the HMDA rulemaking process, the Bureau identified seven key aspects or dimensions of compliance costs with a data collection and reporting rule: (1) The reporting system used; (2) the degree of system integration; (3) the degree of system automation; (4) the tools for geocoding; (5) the tools for performing completeness checks; (6) the tools for performing edits; and (7) the compliance program. The Bureau assumes that financial institutions will set up their 1071 reporting in a manner similar to how HMDA reporting was implemented.[879] The Bureau presented this list of key aspects or dimensions of compliance costs in its SBREFA Outline, but did not receive specific feedback or suggestions about these areas of compliance costs.

The Bureau found during the HMDA rulemaking process that, generally, the complexity of a financial institution's approach across dimensions was consistent—that is, a financial institution generally would not use less complex approaches on some dimensions and more complex approaches on others.[880] This allowed the Bureau to classify financial institutions, including depository institutions and nondepository institutions, into three broad tiers according to the overall level of complexity of their compliance operations. Using very similar assumptions to HMDA, the Bureau's estimation of the costs of this proposed rule also assumed that complexity across dimensions of a financial institution's small business lending data collection and reporting system is consistent.

Table 3 below summarizes the typical approach to those seven key aspects or dimensions of compliance costs across three representative types of financial institutions based on level of complexity in compliance operations. Financial institutions that are Type A have the lowest level of complexity in compliance operations, while Type B and Type C have the middle and highest levels of complexity, respectively.

[878] *Home Mortgage Disclosure (Regulation C),* 80 FR 66128, 66269 (Oct. 28, 2015).

[879] For example, the Bureau assumes that financial institutions will integrate their small business data management system with their other data systems the same way that similar institutions integrated their HMDA management system.

[880] 80 FR 66128, 66269 (Oct. 28, 2015).

**Table 3: Typical approach to certain aspects/dimensions of compliance costs based on level of complexity for types of 1071 reporters**

| Aspect/dimension of compliance costs | Typical approach by low complexity financial institutions (Type A FIs) | Typical approach by medium complexity financial institutions (Type B FIs) | Typical approach by high complexity financial institutions (Type C FIs) |
|---|---|---|---|
| **Data storage system used** | Store data in Excel | Use LOS and SBL DMS | Use multiple LOS, FI's central SoR, SBL DMS |
| **Degree of system integration** | (None) | Have forward integration (LOS to SBL DMS) | Have backward and forward integration |
| **Degree of system automation** | Highly manual process for entering and checking data | Use manual edit checks | Have high automation (only verifying edits manually) |
| **Tools for geocoding** | Use FFIEC tool (manual) | Use batch processing | Use batch processing with multiple sources |
| **Tools for completeness checks** | Conduct manual checks and rely on CFPB quality/validity checks | Use LOS, which includes completeness checks | Use multiple stages of checks |
| **Tools for edits** | Use CFPB edits only | Use CFPB and customized edits | Use CFPB and customized edits run multiple times |
| **Compliance program** | Have a joint compliance and audit office | Have basic internal and external accuracy audit | Have in-depth accuracy and fair lending audit |

Note: LOS is "Loan Origination System"; SoR is "System of Record"; SBL DMS is "Small Business Lending Data Management System."[881]

In previous HMDA rulemakings, the Bureau found that the number of loan applications received was largely correlated with overall complexity of financial institutions' compliance operations.[882] The Bureau used this observation from HMDA, in addition to early outreach to financial institutions and data from Call Reports and publicly available data from the CDFI Fund, to generate assumptions about the number of annual small business lending applications processed by each FI type. The Bureau assumes that Type A FIs receive fewer than 300 applications per year, Type B FIs receive between 300 and 2,000 applications per year, and Type C FIs receive more than 2,000 applications per year. The Bureau assumes that, for types A and B, one out of two small business applications will result in an origination. Thus, the Bureau assumes that Type A FIs originate fewer than 150 products per year and Type B FIs originate between 150 and 1,000 products per year. The Bureau assumes that Type C FIs originate one out of three applications and more than 1,000 per year.[883]

The Bureau understands that costs vary by financial institution due to many factors, such as size, operational structure, and product complexity. Due to data limitations, the Bureau is unable to capture many of the ways in which costs vary by institution, and therefore uses these representative financial institutions with the above assumptions for its analysis. In order to aggregate costs to a market level, the Bureau must map financial institutions onto its types using discrete volume categories.

For the ongoing costs discussion in part VII.F.3.ii below, the Bureau discusses costs in the context of representative institutions for ease of

[881] The Bureau expects the development of a market for small business data management systems similar to HMDA management systems that financial institutions will license or purchase from third parties.

[882] 80 FR 66128, 66270 (Oct. 28, 2015).

[883] The Bureau chose the 1:2 and 1:3 application to origination ratios based on two sources of information. First see Biz2Credit, *Small Business Loan Approval Rates Rebounded in May 2020: Biz2Credit Small Business Lending Index* (May 2020), *https://cdn.biz2credit.com/appfiles/biz2credit/pdf/report-may-2020.pdf,* which shows that, in December of 2019, large banks approved small business loans at a rate of 27.5 percent, while small banks and credit unions had approval rates of 49.9 percent and 40.1 percent. Additionally, and supported by the Bureau's data from supervisory exams, the Bureau chose a 33 percent approval rate as a conservative measure among these estimates for complex financial institutions (Type C FIs).

exposition. The Bureau assumes that a representative Type A FI receives 100 small business credit applications per year, a representative Type B FI receives 400 applications per year, and a representative Type C FI receives 6,000 applications per year. The Bureau further assumes that a representative Type A FI originates 50 covered credit transactions per year, a representative Type B FI originates 200 covered credit transactions per year, and a representative Type C FI originates 3,000 covered credit transactions per year.

The Bureau presented an earlier version of this cost calculation methodology in the SBREFA Outline and during the SBREFA process.[884] In general, SERs provided minimal feedback on the overall structure of the categorization of financial institutions and activities required to collect, check, and report data under the proposed rule.[885] The Bureau has made two changes to its methodology in response to SER feedback. One SER stated that the methodology would benefit from an additional category of complexity between Types B and C. To address this issue, while the Bureau did not add an additional category of complexity, it has increased the number of applications assumed for Type A FIs and Type B FIs so that these institutions cover more of the small business credit market. The Bureau has adjusted the categories of applications for Type A FIs and Type B FIs to 100 and 400 (from 75 and 300, respectively). Several SERs also suggested that the ratio of applications per originated loans used in the SBREFA Outline was too high. The Bureau has accordingly updated its assumptions to assume two applications per origination (instead of its original three-to-one ratio) for Type A FIs and Type B FIs.

The Bureau seeks comment on its methodologies, as described in this part VII.E (including parts VII.E.1, VII.E.2, and VII.E.3 below), for estimating one-time costs of implementation, estimating ongoing costs of implementation, and generating market-level estimates of one-time and ongoing costs.

1. Methodology for Estimating One-Time Costs of Implementation of the Proposed Rule

The Bureau has identified the following eight categories of one-time costs that would likely be incurred by financial institutions to develop the infrastructure to collect and report data under the proposed rule:

1. Preparation/planning
2. Updating computer systems
3. Testing/validating systems
4. Developing forms/applications
5. Training staff and third parties (such as dealers and brokers)
6. Developing policies/procedures
7. Legal/compliance review
8. Post-implementation review of compliance policies and procedures

Conversations with financial institutions have informed the Bureau's understanding of one-time costs. Financial institutions will likely have to spend time and resources understanding the regulation, developing the required policies and procedures for their employees to follow, and engaging a legal team to review their draft policies and procedures. Additionally, financial institutions may require new equipment, such as new computer systems that can store and check the required data points; new or revised application forms or related materials to collect any data that would be required under the proposed rule that they do not currently collect, including minority-owned and women-owned business status and the ethnicity, race, and sex of applicants' principal owners, and to provide any related disclosures required by the rule. Some financial institutions mentioned that they may store, check, and report data using third-party providers such as Fiserv, Jack Henry, LaserPro, or Fidelity Information Systems (FIS), while others may use more manual methods of data storage, checking, and reporting using software applications such as Microsoft Excel. Financial institutions would also engage in a one-time training of all small business lending staff to ensure that employees understand the new policies and procedures. After all new policies and procedures have been implemented and systems/equipment deployed, financial institutions will likely undertake a final internal review to ensure that all the requirements of the section 1071 regulation have been satisfied.

The Bureau presented the one-time cost categories in the SBREFA Outline and during the SBREFA process.[886] The SERs generally confirmed that the eight categories listed above accurately capture the components of one-time costs.

The Bureau conducted a survey regarding one-time implementation costs for section 1071 compliance targeted at FIs who extend small business credit.[887] The Bureau developed the survey instrument based on guidance from industry on the potential types of one-time costs institutions might incur if required to report under a 1071 rule and tested the survey instrument on a small set of FIs, incorporating their feedback prior to implementation. Estimates from survey respondents form the basis of the Bureau's estimates for one-time costs in assessing the potential impact of this proposed rule. The survey was broadly designed to ask about the one-time costs of reporting data under a regime that only includes mandatory data points, uses a reporting structure similar to HMDA, uses the Regulation B definition of an ''application,'' and uses the respondent's own internal small business definition. The survey was divided into three sections: Respondent Information, One-Time Costs, and the Cost of Credit to Small Entities.

In the Respondent Information section, the Bureau obtained basic information about the respondent, including information on the type of institution, its size, and its volume of small business lending. (The Bureau did not, however, obtain the actual name or other directly identifying information about respondents.) The One-Time Costs section of the survey measured the total hours, staff costs, and non-salary expenses associated with the different tasks comprising one-time costs. Using the reported costs of each task, the Bureau estimated the total one-time cost for each respondent. The Cost of Credit to Small Entities section dealt with the respondent's anticipated response to the increased compliance costs of being covered by the rule in order to understand the impacts of the regulation on its small business lending activity, including any anticipated potential changes to underwriting standards, volume, prices, product mix, or market participation.

The Bureau worked with several major industry trade associations to recruit their members to respond to the survey. A total of 105 financial institutions responded to the survey.

To estimate one-time costs, the Bureau needed information on a financial institution's one-time costs by category and number of originations. Of the 105 total respondents, 49 answered these questions. The Bureau will henceforth refer to these respondents as the ''cost estimation sample.'' Of these respondents, 42 (86 percent) self-

[884] SBREFA Outline at 52–56.

[885] The SER feedback discussed in this section-by-section analysis can be found in the SBREFA Panel Report at 37–38.

[886] SBREFA Outline at 49–52.

[887] The One-Time Cost Survey was released on July 22, 2020; the response period closed on October 16, 2020. The OMB control number for this collection is 3170–0032.

reported that they were a depository institution (bank or credit union). The remaining seven (14 percent) were nondepository institutions. Table 4 presents the self-reported asset size of the 42 depository institution respondents in the cost estimation sample.[888]

**Table 4: Asset sizes of depository institutions in one-time cost estimation sample**

| Asset Category | Count | Frequency |
|---|---|---|
| Less than $250 million | 9 | 21.43 |
| $250 million to $500 million | 9 | 21.43 |
| $500 million to $1 billion | 7 | 16.67 |
| $1 billion to $10 billion | 8 | 19.05 |
| $10 billion to $500 billion | 9 | 21.43 |

For the purposes of estimating one-time costs, the Bureau distinguishes between depository institutions and nondepository institutions. The majority of nondepository institutions are not currently subject to any data reporting requirements, with the notable exception of nondepository CDFIs. The Bureau anticipates that covered financial institutions that are not currently subject to data reporting requirements will need to make more changes to their existing business operations in order to comply with the requirements of the new rule. This expectation is confirmed by the higher estimated one-time costs for nondepository institutions relative to depository institutions discussed in part VII.F.3.i.

The Bureau categorizes depository institution respondents in the cost estimation sample into four groups according to the respondents' self-reported total originations. The first group contains the two depository institutions that reported fewer than 25 originations; the Bureau assumes these institutions would not report under the proposed rule. The second group contains ten depository institutions that reported between 25 and 149 originations. The Bureau categorizes these as Type A DIs (that is, a DI that is Type A as defined above.) The third group contains the 19 depository institutions that reported between 150 and 999 originations. The Bureau categorizes these as Type B DIs. The final group contains the 11 depository institutions that reported 1,000 or more originations. The Bureau categorizes these as Type C DIs.

There are not enough nondepository institutions in the cost estimation sample to separate nondepository institutions into Types A, B, and C and obtain meaningful estimates. Instead, the Bureau is relying on the assumption that nondepository institutions (referred to as Non-DIs for purposes of this analysis) will incur the same one-time costs regardless of complexity.

The Bureau estimated the one-time costs for each of the four categories of financial institutions (Type A DI, Type B DI, Type C DI, and Non-DI) using the following methodology.

For each of the eight categories of one-time costs, the Bureau asked financial institutions to estimate and report the total number of hours that junior, mid-level, and senior staff would spend on each task, along with any additional non-salary expenses. If a respondent did not provide estimates for any component (*i.e.,* staff hours or non-salary expenses) of any category, it is not counted as part of the cost estimation sample. If a respondent provided estimates for some components but did not provide an estimate for a particular component (*e.g.,* non-salary expenses for preparation/planning) then the Bureau assumed that the respondent estimated zero for that component.

The Bureau asked survey respondents to report the average hourly wage for junior, mid-level, and senior/executive staff involved in the one-time cost categories. However, for the purposes of estimating one-time costs, the Bureau assumed a constant wage across financial institutions for each level of staff. For junior staff, the Bureau used $16.18, the 10th percentile hourly wage estimate for ''loan officers'' according to the 2020 Occupational Employment Statistics compiled by the Bureau of Labor Statistics.[889] For mid-level staff, the Bureau used $36.99, the mean hourly wage estimate for ''loan officers.'' For senior staff, the Bureau used $64.35, the 90th percentile hourly wage estimate for ''loan officers.'' To account for non-monetary compensation, the Bureau also scaled these hourly wages up by 43 percent.[890] The Bureau assumed a total hourly compensation of $23.14 for junior staff, as compared to $28.76, the mean of the junior wages

[888] Nondepository institutions also reported assets. The Bureau separately reports asset category for depository institutions because asset sizes are not as comparable between depositories and nondepositories. The Bureau does not report asset sizes for nondepository respondents because there were too few respondents to report separately without risking re-identification of respondents.

[889] *See* Bureau of Labor Statistics, U.S. Dep't of Labor, *Occupational Employment and Wage Statistics* (May 2020), *https://www.bls.gov/oes/current/oes132072.htm.*

[890] The March 2020 Employer Costs for Employee Compensation from the Bureau of Labor Statistics documents that wages and salaries are, on average, 70 percent of employee compensation for private industry workers. The Bureau inflates the hourly wage to account for 100 percent of employee compensation ((100/70) − 1) * 100 = 43 percent). *See* Bureau of Labor Statistics, U.S. Dep't of Labor, *Employer Costs for Employee Compensation* (Mar. 2020), *https://www.bls.gov/news.release/archives/ecec_06182020.pdf.*

reported by respondents. The Bureau assumed a total hourly compensation of $52.90 for mid-level staff, as compared to $48.94, the mean of the mid-level wages reported by respondents. The Bureau assumed a total hourly compensation of $92.02, as compared to $90.19, the mean of the senior/executive wages reported by respondents.

For each respondent in the cost estimation sample, the Bureau calculated the cost of each one-time cost category as the sum of the junior wage multiplied by the reported junior hours, the mid-level wage multiplied by the reported mid-level hours, and the senior wage multiplied by the reported senior hours and the reported non-salary expenses. The total cost for the respondent was the sum of the costs across all eight categories.

After calculating the total costs for each respondent, the Bureau identified outliers within the four groups of financial institutions (Type A DI, Type B DI, Type C DI, and Non-DI) using the interquartile range method, a standard outlier identification method. For each group of financial institutions, an observation is considered an outlier if the estimated total cost is greater than $1.5*(P_{75} - P_{25}) + P_{75}$ or less than $P_{25} - 1.5*(P_{75} - P_{25})$ where $P_{75}$ and $P_{25}$ are the 75th and 25th percentiles, respectively, of total costs within that group. Using this method, the Bureau identified one outlier in each Type A DI, Type B DI, and Type C DI group and no outliers in the Non-DI group.

In addition to the total estimated one-time costs, the Bureau is interested in the hours, non-salary expenses, and total costs associated with each of the different one-time cost categories. For each group, the Bureau estimated each component of one-time costs by taking the mean of the estimated component within the group, after excluding outliers. For example, the estimated number of junior hours required by DIs of Type A to update computer systems is the mean number of junior hours reported by the nine DIs of Type A that were in the cost estimation sample, excluding one outlier. The Bureau estimated the cost associated with each category as the sum of the junior wage multiplied by the estimated junior hours, the mid-level wage multiplied by the estimated mid-level hours, and the senior wage multiplied by the estimated senior hours, and the estimated non-salary expenses.

2. Methodology for Estimating Ongoing Costs of Implementation of the Proposed Rule

The Bureau identified 15 specific data collection and reporting activities that would impose ongoing costs. Table 5 presents the full list of 15 activities. Activities 1 through 3 can broadly be described as data collection activities: These tasks are required to intake data and transfer it to the financial institution's small business data entry system. Activities 4 through 10 are related to reporting and resubmission: These tasks are required to collect required data, conduct internal checks, and report data consistent with the proposed rule. Activities 11 through 13 are related to compliance and internal audits: Employee training, and internal and external auditing procedures required to ensure data consistency and reporting in compliance with the rule. Finally, activities 14 and 15 are related to 1071 examinations by regulators: These tasks will be undertaken to prepare for and assist during regulatory compliance examinations.

BILLING CODE 4810–25–P

**Table 5: 1071 data collection and reporting activities imposing ongoing costs**

| No. | Activity |
|---|---|
| 1 | Transcribing data |
| 2 | Resolving reportability questions |
| 3 | Transferring to Data Entry System, Loan Origination System, or other data storage system |
| 4 | Geocoding data |
| 5 | Standard annual edit and internal checks |
| 6 | Researching questions |
| 7 | Resolving question responses |
| 8 | Checking post-submission edits |
| 9 | Filing post-submission documents |
| 10 | Small business data reporting/geocoding software |
| 11 | Training |
| 12 | Internal audit |
| 13 | External audit |
| 14 | Exam preparation |
| 15 | Exam assistance |

Table 6 provides an example of how the Bureau calculated ongoing compliance costs associated with each compliance task. The table shows the calculation for each activity and notes whether the task would be a ''variable cost,'' which would depend on the number of applications the institution receives, or a ''fixed cost'' that does not depend on the number of applications. Table 6 shows these calculations for a Type A FI, or the institution with the least amount of complexity. Table 7 below summarizes the activities whose calculation differs by institution complexity and shows the calculations for Type B FIs and Type C FIs (where they differ from those for a Type A FI).[891]

**Table 6: Ongoing compliance cost calculations for a Type A FI**

| No. | Activity | Calculation | Type[891] |
|---|---|---|---|
| 1 | Transcribing data | Hourly compensation x hours per app. x applications | Variable |
| 2 | Resolving reportability questions | Hourly compensation x hours per app. with question x applications with questions | Variable |
| 3 | Transfer to Data Entry System | Hourly compensation x hours per app. x applications | Variable |
| 4 | Complete geocoding data | Hourly compensation x hours per app. x applications | Variable |
| 5 | Standard annual edit and internal checks | Hourly compensation x hours spent on edits and checks | Fixed |
| 6 | Researching questions | Hourly compensation x hours per app. with question x applications with questions | Variable |
| 7 | Resolving question responses | Hourly compensation x hours per app. with question x applications with questions | Variable |
| 8 | Checking post-submission edits | Hourly compensation x hours checking post-submission edits per application | Variable |
| 9 | Filing post-submission documents | Hourly compensation x hours filing post-submission docs | Fixed |
| 10 | Small business data reporting/geocoding software | Uses free geocoding software | Fixed |
| 11 | Training | Hourly compensation x hours of training per year x number of loan officers | Fixed |
| 12 | Internal audit | No internal audit conducted by financial institution staff | Fixed |
| 13 | External audit | One external audit per year | Fixed |
| 14 | Exam preparation | Hourly compensation x hours spent on examination preparation | Fixed |
| 15 | Exam assistance | Hourly compensation x hours spent on examination assistance | Fixed |

BILLING CODE 4810–25–C

[891] In this table, the term ''variable'' means the complance cost depends on the number of applications. The term ''fixed'' means the compliance cost does not depend on the number of applications (even if there are other factors upon which it may vary).

Many of the activities in Table 6 require time spent by loan officers and other financial institution employees. To account for time costs, the calculation used the hourly compensation of a loan officer multiplied by the amount of time required for the activity. The Bureau used a mean hourly wage of $36.99 for loan officers, based on data from the Bureau of Labor Statistics.[892] To account for non-monetary compensation, the Bureau scaled this hourly wage by 43 percent to arrive at a total hourly compensation of $52.90 for use in these calculations.[893] The Bureau used assumptions from its 2015 HMDA final rule analysis, updated to reflect differences between mortgage lending and small business lending, to estimate time spent on ''ongoing tasks.'' [894] As an example of a time calculation, the Bureau estimated that transcribing the required data points would require approximately 11 minutes per application for a Type A FI. The calculation multiplied the number of minutes by the number of applications and the hourly compensation to arrive at the total cost, on an annual basis, of transcribing data. As another example, the Bureau estimated that ongoing training for loan officers to comply with a financial institution's 1071 policies and procedures would take about two hours per loan officer per year. The cost calculation multiplies the number of hours by the number of loan officers and by the hourly compensation.

To arrive at the amount of time required per application for each of the 15 tasks covered financial institutions would conduct to collect, check, and report 1071 data, the Bureau began with the assumptions made for each task for the 35 data points under the 2015 HMDA final rule and then adjusted these required times relative to the number of data points required under the proposed 1071 rule. The proposed rule would require covered financial institutions to collect 21 data points for each covered application. Several of these data points have multiple components. For example, the credit type data point has three subcomponents of product type, the type of guarantee, and the term. The data points for pricing information and the ethnicity, race, and sex of principal owners also have multiple subcomponents.

Some activity costs in Table 6 depend on the number of applications. It is important to differentiate between these variable costs and fixed costs because the type of cost impacts whether and to what extent covered institutions might be expected to pass on their costs to small business loan applicants in the form of higher interest rates or fees (discussed in more detail in part VII.F.4 below). Data collection, reporting, and submission activities such as geocoding data, standard annual edits and internal checks, researching questions, and resolving question responses are variable costs. All other activities are fixed cost because they do not depend on the overall number of applications being processed. An example of a fixed cost calculation is exam preparation, where the hourly compensation is multiplied by the number of total hours required by loan officers to prepare for 1071-related compliance examinations.

Table 7 shows where and how the Bureau assumed Type B FIs and Type C FIs differ from Type A FIs in its ongoing cost methodology. Type B FIs and Type C FIs use more automated procedures, which result in different cost calculations. For example, for Type B FIs and Type C FIs, transferring data to the data entry system and geocoding applications are done automatically by business application data management software licensed annually by the financial institution. The relevant address is submitted for geocoding via batch processing, rather than done manually for each application. The additional ongoing geocoding costs reflect the time spent by loan officers on ''problem'' applications—that is, a percentage of overall applications that the geocoding software misses—rather than time spent on all applications. However, Type B FIs and Type C FIs have the additional ongoing cost of a subscription to a geocoding software or service as well as a data management software that represents an annual fixed cost of reporting 1071 application data. This is an additional ongoing cost that less complex Type A FIs will not incur. The Bureau expects that Type A FIs will use free geocoding software available from the FFIEC or the Bureau, which may include a new batch function that could be developed by either the FFIEC or the Bureau.

Additionally, audit procedures differ between the three representative institution types. The Bureau expects a Type A FI would not conduct an internal audit but would pay for an annual external audit. A Type B FI would be expected to conduct a simple internal audit for data checks and also pay for an external audit on an annual basis. Type C FIs would have a sophisticated internal audit process in lieu of an external audit.

BILLING CODE 4810–25–P

[892] These data reflect the mean hourly wage for ''loan officers'' according to the 2020 Occupational Employment Statistics compiled by the Bureau of Labor Statistics. *See* Bureau of Labor Statistics, U.S. Dep't of Labor, *Occupational Employment and Wages* (May 2020), *https://www.bls.gov/oes/current/oes132072.htm*.

[893] The March 2020 Employer Costs for Employee Compensation from the Bureau of Labor Statistics documents that wages and salaries are, on average, 70 percent of employee compensation for private industry workers. The Bureau inflates the hourly wage to account for 100 percent of employee compensation ((100/70) − 1) * 100 = 43 percent). Bureau of Labor Statistics, U.S. Dep't of Labor, *Employer Costs for Employee Compensation* (Mar. 2020), *https://www.bls.gov/news.release/archives/ecec_06182020.pdf*.

[894] *Home Mortgage Disclosure Act (Regulation C),* 80 FR 66128 (Oct. 28, 2015).

Some differences, for example, are reflected in the number of applications, the number of data points per application, and the number of loan officers for the representative institutions.

**Table 7: Differences in ongoing cost calculations for Type B FIs and Type C FIs versus Type A FIs**

| No. | Activity | Difference for a Type B FI | Difference for a Type C FI |
|---|---|---|---|
| 3 | Transfer to Data Entry System | No employee time cost. Automatically transferred by data management software purchased/licensed | No employee time cost. Automatically transferred by data management software purchased/licensed |
| 4 | Complete geocoding data | Cost of time per application unable to be geocoded by software | Few applications that require manual attention. Completed by third party software vendor. |
| 10 | Small business data reporting/geocoding software | Uses geocoding software and/or data management software that requires annual subscription | Uses geocoding software and/or data management software that requires annual subscription |
| 12 | Internal Audit | Hourly compensation x hours spent on internal audit | Hourly compensation x hours spent on internal audit |
| 13 | External Audit | Yearly fixed expense on external audit | Only an extensive internal audit and no expenses on external audits |

Table 8 below shows major assumptions that the Bureau made for each activity for each type of financial institution. Table 8 provides the total number of hours the Bureau assumes are required for each task that requires labor. For example, the Bureau assumes that transcribing data for 100 applications will require 18 hours of labor. The table also shows the assumed fixed cost of software and audits, as well as areas where the Bureau assumes there will be cost savings due to technology. In several cases, the activity does not apply to financial institutions of a certain type, and are therefore not displayed.

**Table 8: Major assumptions for the representative Type A FIs, Type B FIs, and Type C FIs**

| No. | Activity | Type A FI | Type B FI | Type C FI |
|---|---|---|---|---|
| 1 | Transcribing data | 18 hours total | 36 hours total | 543 hours total |
| 2 | Resolving reportability questions | 11 hours total | 22 hours total | 33 hours total |
| 3 | Transfer to 1071 Data Management Software | 18 hours total | N/A | N/A |
| 4 | Complete geocoding data | 7 hours total; reduction in time cost relative to HMDA for software with batch processing | 10 hours total (0.5 hours per "problem" loan times 5% of loans that are "problem") | N/A |
| 5 | Standard annual edit and internal checks | 17 hours total; reduction for online submission platform | 214 hours total; reduction for online submission platform | 704 hours total; reduction for online submission platform |
| 6 | Researching questions | 5 hours total | 11 hours total | 16 hours total |
| 7 | Resolving question responses | 1 hour total | 1 hour total | 1 hour total |
| 8 | Checking post-submission edits | 1 hour total | 4 hours total | 17 hours total |
| 9 | Filing post-submission documents | <1 hour total | <1 hour total | < 1 hour total |
| 10 | 1071 Data Management System / geocoding software | N/A | $8,000 | $13,271 |
| 11 | Training | 12 hours total | 60 hours total | 400 hours total |
| 12 | Internal audit | N/A | 8 hours total | 2,304 hours total |
| 13 | External audit | $3,500 | $5,000 | N/A |
| 14 | Exam preparation | <1 hour total | 80 hours total | 480 hours total |
| 15 | Exam assistance | 2 hours total | 12 hours total | 80 hours total |

BILLING CODE 4810–25–C

3. Methodology for Generating Market-Level Estimates of One-Time and Ongoing Costs

To generate market-level cost estimates, the Bureau relied on the estimates of the volume of small business lending originations described in part VII.D above. As with institutional coverage, the Bureau separates market-level cost estimates into estimates for depository institutions and for nondepository institutions.

For depository institutions, the Bureau estimated which institutions of those that existed at the end of 2019 would likely be covered or not covered by the proposed rule. An institution

would be required to report data on applications received in 2019 if it originated at least 25 covered originations in each of the preceding two years (*i.e.,* 2017 and 2018). If two depository institutions merged between the end of 2017 and the end of 2019, the Bureau assumes that those institutions would report as one entity. The Bureau then categorized each institution as a Type A DI, Type B DI, or Type C DI based on its originations in 2019. Depository institutions with 0 to 149 covered originations in 2019 are categorized as Type A. Depository institutions with 150 to 999 covered originations are categorized as Type B. Depository institutions with 1,000 or more covered originations are categorized as Type C. For each depository institution, the Bureau assigns the appropriate estimated one-time cost, ongoing fixed cost, ongoing variable cost per application, and applications per origination estimates associated with its institution type. The estimated number of annual applications for each institution is the estimated number of originations multiplied by the number of applications per origination for that institution type. The annual ongoing cost for each institution is the ongoing fixed cost plus the ongoing variable cost per application multiplied by the estimated number of applications.

To generate market-level estimates, the Bureau first calculates the estimated one-time and annual ongoing costs for each depository institution covered by the proposed rule based on the estimated number of originations for that institution in 2019. The Bureau then sums over the covered depository institutions to find market-level statistics of total costs. As with coverage estimates, the Bureau presents a range of estimates for market-level statistics. The range reflects the uncertainty associated with the estimate of costs for banks and savings associations below the CRA reporting threshold. The Bureau has documented how it calculated these ranges in its *Supplemental estimation methodology for institutional coverage and market-level cost estimates in the small business lending data collection notice of proposed rulemaking.*[895]

The Bureau is unaware of institution-level data on originations by nondepository institutions that are comprehensive enough to estimate costs using the same method as that for depository institutions. Therefore, to generate market-level estimates for nondepository institutions, the Bureau relies on the estimates discussed above and several key assumptions. The Bureau assumes that fintech lenders and MCAs are Type C FIs because they generally have more automated systems and originate more products. The Bureau assumes that the remaining nondepository institutions are Type B FIs. The Bureau assumes that each nondepository receives the same number of applications as the representative institution for each type, as described above. Hence, the Bureau assumes that fintech lenders and MCAs each receive 6,000 applications per year and all other nondepository institutions receive 400 applications per year. As explained above, the Bureau also assumes that all nondepository institutions have the same one-time costs.

*F. Potential Benefits and Costs to Covered Financial Institutions and Small Businesses*

1. Benefits to Small Businesses

The proposed rule could benefit small businesses by collecting data that further the two statutory purposes of section 1071. Those purposes are to facilitate the enforcement of fair lending laws and enable communities, governmental entities, and creditors to identify business and community development needs and opportunities of women-owned, minority-owned, and small businesses. Some of the benefits to small businesses discussed below stem from the public release of the data collected under the proposed rule. As discussed in more detail in part VI, the Bureau is proposing to exercise its discretion under ECOA section 704B(e)(4) to delete or modify data collected under section 1071 which are or will be available to the public where the Bureau determines that the deletion or modification of the data would advance a privacy interest. The below discussion considers the benefits of unmodified data released for public consumption, but the Bureau acknowledges that the benefits derived from public disclosure may be lower if modifications are made that reduce the utility of the public dataset.

Data collected under the proposed rule would constitute the largest and most comprehensive data in the United States on credit availability for small businesses. These data would provide important insight into possible discriminatory lending patterns in the small business lending market. Regulators could use the data to gauge fair lending risks and prioritize examinations of lenders that have a higher likelihood of violating antidiscrimination statutes. This would lead to a more efficient use of government resources in enforcing fair lending provisions. Furthermore, the public nature of the dataset would allow for members of the public to review the public dataset for possible violations of antidiscrimination statutes. The increased ability to perform fair lending analyses would benefit women-owned and minority-owned small businesses both directly, in the form of remediation when lenders ultimately are found to have violated fair lending laws, and indirectly, with increased access resulting from the scrutiny placed on financial institutions.

Central to the fair lending benefit of the dataset is the proposed collection of the action taken data point. Existing datasets that collect transaction-level data only contain data on originated small business loans. Application-level data, combined with the collection of action taken data, could allow users to construct approval or denial rates, for example, for particular lenders. Such analyses could indicate whether, for example, women-owned or minority-owned small businesses are being denied credit at higher rates than other small businesses.

The proposed rule would also include several data points on the pricing of covered credit transactions that are originated or approved but not accepted. Data users could examine, for example, whether women-owned or minority-owned small businesses are charged higher interest rates, origination charges, or initial annual charges than similarly situated businesses that are not women- or minority-owned. The proposed rule would also require information on prepayment penalties, which is an area of increasing concern due to the potential for predatory lending practices.[896] Users could examine whether women-owned or minority-owned small firms are more likely to have prepayment penalties on extended credit.

Several data points included in the proposed rule would contribute to more accurate fair lending analyses by allowing users to compare credit products with similar characteristics. For example, there are likely differences in approval rates and prices for covered credit transactions based on credit amount applied for and approved, all

[895] *See https://www.consumerfinance.gov/data-research/research-reports/supplemental-estimation-methodologies-small-business-lending-data-collection-nprm/.*

[896] Such concerns have led California, for example, to include prepayment policies as a required component of pricing disclosures in commercial financing (*see* Cal. S.B. 1235 (Sept. 30, 2018), *https://leginfo.legislature.ca.gov/faces/billTextClient.xhtml?bill_id=201720180SB1235*).

three aspects of credit type (type of credit product, types of guarantees, and loan term), and credit purpose, since these factors influence the risk of extending credit. Many creditors also consider characteristics about the small business, such as industry, gross annual revenue, or time in business during their underwriting or pricing processes. Supply and demand for small business credit also varies over time and by location, so the inclusion of census tract, application date, and action taken date could lead to more accurate analyses. More accurate screening for fair lending risk would, for example, reduce the false positive rate observed during fair lending prioritization and increase the efficiency of fair lending reviews.

Creditors would also likely use the data to understand small business lending market conditions more effectively and at a more granular level than is possible with existing data sources, such as Call Reports, data from public lending programs, or privately purchased data. Data collected under the proposed rule, combined with the institution's existing information on the small business lending market, could help creditors to identify potentially profitable opportunities to extend credit. For example, creditors could use the census tract information to find areas of high credit demand into which they could consider expanding. Small business owners would benefit from increased credit availability.

Governmental entities will likely use the data to develop solutions that achieve policy objectives. For example, loan guarantees provided by the SBA's 7(a) and 504 programs are designed to increase the availability of business credit for businesses that otherwise have difficulty accessing credit. Governmental entities could use the comprehensive data on applications for covered credit transactions collected under the proposed rule to identify additional opportunities to create new—or tailor existing—programs to advance their small business lending policy objectives.

The data collected under the proposed rule would be the most extensive data on credit access for women-owned and minority-owned small businesses, and such information will help various data users in understanding the needs and opportunities of women-owned and minority-owned small businesses. For example, governmental entities often create programs that specifically target women-owned and minority-owned businesses, such as those that reserve government contracts, those that provide grants, or those specifically targeted at women-owned and minority-owned small firms. Governmental entities could use data collected under the proposed rule to alter existing programs or create new ones to meet the needs of these business owners. Private lenders could also use the data to find untapped markets of credit demand from women-owned and minority-owned small businesses.

As one of the premier data sources on the small business credit market, data collected under the proposed rule would also facilitate rigorous academic research. HMDA data, which are similar in many ways to the data that will be collected under the proposed rule, have been analyzed in many scholarly publications. The data collected under section 1071 will provide academics and other researchers a clearer window into potential discrimination in the small business credit market, as well as a better understanding of small business credit market trends and dynamics. Like in the case of HMDA, data collected under the proposed rule will be more broadly used to understand how business owners make borrowing decisions, respond to higher prices, and respond to risk.[897]

The proposed data points would provide the above benefits in several ways. The action taken and pricing information data points would allow various entities to monitor the tightness of the small business credit market and identify areas where there are high denial rates for small business credit or where it is provided only at high cost, especially to women-owned or minority-owned small businesses. Data on census tract, NAICS code, gross annual revenue, and number of workers will provide insight into the availability of small business credit by geography, industry, and business size. Credit type and credit purpose would provide more information on how small women-owned and minority-owned businesses use credit and whether their use differs from that of other small businesses. Time in business information would allow data users to understand the credit needs of young small businesses, and specifically young women-owned and minority-owned small businesses. Recent research has shown that women-owned and minority-owned businesses face different financing challenges early in the business lifecycle than other firms, primarily driven by less access to external financing.[898]

The Bureau seeks comment on its analysis of potential benefits to small businesses as described herein.

2. Benefits to Covered Financial Institutions

The proposed rule would provide some benefits to some covered financial institutions—*i.e.,* the financial institutions that would be required to collect and report 1071 data on small business applications for credit. The first is some reduction of the compliance burden of fair lending reviews for lower risk financial institutions, by reducing the ''false positive'' rates during fair lending review prioritization by regulators. Currently, financial institutions are subject to fair lending reviews by regulators to ensure that they are complying with the ECOA in their small business lending processes. Data reported under the proposed rule would allow regulators to prioritize fair lending reviews of financial institutions with higher risk of fair lending violations, which reduces the burden on institutions with lower fair lending risk. Covered financial institutions would also be able to use the data to monitor, identify, and address their own fair lending risks and thereby avoid liability from enforcement actions and adverse exam findings requiring remedial action.

The proposed data collection could also provide an unprecedented window into the small business lending market, and such transparency may benefit financial institutions covered by the rule. Comprehensive information on small business credit applications and originations are currently unavailable.

[897] For examples of how HMDA data has facilitated research on the mortgage market, *see, e.g.,* Bureau of Consumer Fin. Prot., *Data Point: Asian American and Pacific Islanders in the Mortgage Market* (July 2021), *https://files.consumerfinance.gov/f/documents/cfpb_aapi-mortgage-market_report_2021-07.pdf;* Bureau of Consumer Fin. Prot., *Manufactured Housing Finance: New Insights from the Home Mortgage Disclosure Act Data* (May 2021), *https://files.consumerfinance.gov/f/documents/cfpb_manufactured-housing-finance-new-insights-hmda_report_2021-05.pdf;* Neil Bhutta & Benjamin J. Keys, *Moral Hazard during the Housing Boom: Evidence from Private Mortgage Insurance,* The Review of Fin. Studies (2021), *https://academic.oup.com/rfs/advance-article/doi/10.1093/rfs/hhab060/6279755;* Sumit Agarwal *et al., The Effectiveness of Mandatory Mortgage Counseling: Can One Dissuade Borrowers from Choosing Risky Mortgages?* (Nat'l Bureau of Econ. Research, Working Paper No. 19920, 2014), *https://www.nber.org/system/files/working_papers/w19920/w19920.pdf;* Alexei Alexandrov & Sergei Koulayev, *No Shopping in the U.S. Mortgage Market: Direct and Strategic Effects of Providing Information* (Bureau of Consumer Fin. Prot., Off. of Research Working Paper No. 2017–01, 2018), *https://papers.ssrn.com/sol3/papers.cfm?abstract_id=2948491.*

[898] *See, e.g.,* JPMorgan Chase & Co. Inst., *Small business ownership and liquid wealth* (Mar. 2021), *https://www.jpmorganchase.com/institute/research/small-business/small-business-ownership-and-liquid-wealth-report.*

The data made public pursuant to the proposed rule could allow financial institutions to better understand the demand for small business credit products and the conditions under which they are being supplied by other covered financial institutions.

The Bureau seeks comment on its analysis of potential benefits to covered persons as described herein.

3. Costs to Covered Financial Institutions

i. One-Time Costs to Covered Financial Institutions

Using the methodology described in part VII.E.1 above, Table 9 shows the estimated total expected one-time costs for financial institutions covered by the proposed rule as well as a breakdown by the eight component categories that comprise the one-time costs for Type A DIs, Type B DIs, and Type C DIs, and Non-DIs.

Table 10 shows the estimated number of junior, mid-level, and senior staff hours and non-salary expenses for each component activity for Type A DIs. Tables 11 through 13 show the same estimates for Type B DIs, Type C DIs and Non-DIs respectively. As discussed above, the Bureau estimates all one-time costs to covered financial institutions using the One-Time Cost Survey results.

BILLING CODE 4810–25–P

**Table 9: Estimated one-time costs by cost category and FI Type**

| Category | Type A DI | Type B DI | Type C DI | Non-DI |
|---|---|---|---|---|
| Preparation/planning | $6,300 | $7,100 | $20,000 | $13,800 |
| Updating computer systems | $16,900 | $17,200 | $6,800 | $56,900 |
| Testing/validating systems | $10,900 | $3,000 | $11,100 | $7,400 |
| Developing forms/applications | $4,300 | $3,000 | $4,500 | $4,300 |
| Training staff and third parties | $3,400 | $4,500 | $5,200 | $2,900 |
| Developing policies/procedures | $4,100 | $2,500 | $3,500 | $4,300 |
| Legal/compliance review | $7,600 | $3,000 | $7,100 | $3,900 |
| Post-implementation review | $4,900 | $4,200 | $17,500 | $1,700 |
| Total | $58,400 | $44,500 | $75,700 | $95,200 |

**Table 10: Estimated staff hours and non-salary expenses by cost category for Type A DIs**

| Category | Senior Hours | Mid-Level Hours | Junior Hours | Non-Salary Expenses |
|---|---|---|---|---|
| Preparation/planning | 38 | 43 | 21 | 0 |
| Updating computer systems | 34 | 52 | 41 | $10,000 |
| Testing/validating systems | 18 | 52 | 41 | $5,600 |
| Developing forms/applications | 14 | 34 | 51 | 0 |
| Training staff and third parties | 18 | 26 | 16 | 0 |
| Developing policies/procedures | 24 | 30 | 11 | 0 |
| Legal/compliance review | 28 | 26 | 15 | $3,300 |
| Post-implementation review | 26 | 38 | 19 | 0 |
| Total | 200 | 301 | 215 | $18,900 |

**Table 11: Estimated staff hours and non-salary expenses by cost category for Type B DIs**

| Category | Senior Hours | Mid-Level Hours | Junior Hours | Non-Salary Expenses |
|---|---|---|---|---|
| Preparation/planning | 50 | 35 | 21 | $200 |
| Updating computer systems | 25 | 20 | 12 | $13,600 |
| Testing/validating systems | 18 | 19 | 12 | $100 |
| Developing forms/applications | 21 | 14 | 7 | $200 |
| Training staff and third parties | 23 | 29 | 20 | $400 |
| Developing policies/procedures | 16 | 13 | 7 | $100 |
| Legal/compliance review | 14 | 16 | 5 | $700 |
| Post-implementation review | 15 | 22 | 27 | $1,100 |
| Total | 182 | 168 | 111 | $16,400 |

**Table 12: Estimated staff hours and non-salary expenses by cost category for Type C DIs**

| Category | Senior Hours | Mid-Level Hours | Junior Hours | Non-Salary Expenses |
|---|---|---|---|---|
| Preparation/planning | 92 | 190 | 37 | $500 |
| Updating computer systems | 6 | 46 | 35 | $3,000 |
| Testing/validating systems | 34 | 110 | 50 | $1,000 |
| Developing forms/applications | 13 | 46 | 34 | $100 |
| Training staff and third parties | 11 | 61 | 36 | $100 |
| Developing policies/procedures | 14 | 30 | 14 | $300 |
| Legal/compliance review | 9 | 56 | 44 | $2,300 |
| Post-implementation review | 3 | 246 | 103 | $1,800 |
| Total | 182 | 785 | 353 | $9,100 |

**Table 13: Estimated staff hours and non-salary expenses by cost category for Non-DIs**

| Category | Senior Hours | Mid-Level Hours | Junior Hours | Non-Salary Expenses |
|---|---|---|---|---|
| Preparation/planning | 38 | 47 | 29 | $7,100 |
| Updating computer systems | 27 | 147 | 39 | $45,700 |
| Testing/validating systems | 26 | 24 | 39 | $2,900 |
| Developing forms/applications | 30 | 15 | 19 | $300 |
| Training staff and third parties | 14 | 18 | 17 | $400 |
| Developing policies/procedures | 32 | 15 | 14 | $200 |
| Legal/compliance review | 26 | 18 | 11 | $200 |
| Post-implementation review | 16 | 2 | 1 | $100 |
| Total | 209 | 286 | 169 | $56,900 |

BILLING CODE 4810–25–C

The Bureau estimates that updating computer systems would be the biggest driver of one-time costs for Type A DIs, and Type B DIs and Non-DIs. Type A DIs and Type B DIs would be expected to spend similar amounts on updating computer systems, but Type A DIs would rely somewhat more on staff.

The Bureau expects that Non-DIs would have the highest one-time costs and the highest costs to update computer systems. To update computer systems, Non-DIs would rely on mid-level staff hours and third-party vendors. Non-DIs would also spend relatively more on preparation and planning than Type A DIs or Type B DIs. These estimates are consistent with the expectation that Non-DIs will incur higher costs because they are less likely to already report data to regulators.

The Bureau estimates that the biggest drivers of one-time costs for Type C DIs would be preparation and planning and post-implementation review. These depository institutions would generally rely on mid-level staff hours to implement the required one-time changes and, in particular, would rely on mid-level staff hours for these two key activities. The Bureau estimates that Type C DIs will spend the most of all financial institution types on staff hours to implement one-time changes and the least on non-salary expenses.

The Bureau estimates that one-time costs would be higher for Type A DIs than for Type B DIs. These two types of depository institutions have similar estimated costs for most activities, but Type A DIs are expected to spend more on testing/validating systems and legal/compliance review.

These estimates are generally consistent with feedback from SERs during the SBREFA process. Several SERs stated that changes to their computer systems would contribute to their one-time costs.[899] However, some SERs estimated larger one-time costs than the Bureau and others estimated smaller one-time costs. One SER (a commercial finance company) said that many financial institutions in their industry have no experience reporting data such as will be required under the 1071 rule and that their current developer estimates that the costs just to develop, test, and integrate their system could be up to $200,000. Another SER (a fintech) stated that they do not anticipate any one-time costs. Two SERs estimated that one-time costs would be between $15,000 and $25,000 without a detailed breakdown of those costs. One SER provided a detailed breakdown of costs and estimated that total one-time costs would be $27,000.

As mentioned above, the Bureau realizes that one-time costs vary by institution due to many factors, and that this variance exists on a continuum that is impossible to fully represent. The Bureau focuses on representative types of financial institutions in order to generate practical and meaningful estimates of costs. As a result, the Bureau expects that individual financial institutions would have slightly different one-time costs than the average estimates presented here.

The One-Time Cost Survey instructed respondents to assume that covered institutions would be required to report data at the application level on small business financing that constitutes ''credit'' for purposes of ECOA for the 13 statutorily mandated data points one time per year, and be responsible for validating the accuracy of all data. Respondents were further instructed to use their own institution's internal definition of small business, assume the Regulation B definition of an application, and assume a reporting structure similar to that under HMDA. Finally, respondents were instructed to not include any costs associated with creating a firewall. As such, respondents estimated one-time costs assuming that the proposed rule would be different in some ways from what the Bureau has ultimately proposed here. One SER provided feedback during the SBREFA Panel that it was hard to estimate one-time costs in the survey without knowing all the details of the proposed rule.

The Bureau estimates that the overall market impact of one-time costs for depository institutions would be between $218,000,000 and $229,000,000.[900] Using a 7 percent discount rate and a five-year amortization window, the annualized

[899] The SER feedback discussed in this section-by-section analysis can be found in the SBREFA Panel Report at 38–39.

[900] The Bureau notes that the variation in this range comes primarily from the uncertainty in the number of originations made by small banks and savings associations. The range does not fully account for the uncertainty associated with estimates of the one-time costs for each type of institution.

one-time costs for depository institutions would be $53,200,000 to $55,800,000. The Bureau estimates that the overall market impact of one-time costs for nondepository institutions would be $94,400,000. Using a 7 percent discount rate and a five-year amortization window, the annualized one-time costs for nondepository institutions would be $23,000,000. As a frame of reference for these market-level one-time cost estimates, the estimated total non-interest expenses from the FFIEC and NCUA Call Reports for depository institutions that the Bureau estimates would be covered under the proposed rule was about $439 billion in 2019. The upper bound estimate of total one-time costs is approximately 0.05 percent of the total annual non-interest expenses.

The Bureau seeks comment on its analysis of one-time costs to covered financial institutions as described herein. In particular, the Bureau seeks comment on how to adjust the estimates of one-time costs to account for differences between what respondents to the survey were asked to assume and the proposed rule.

ii. Ongoing Costs to Covered Financial Institutions

Using the methodology described in part VII.E.2, Table 14 shows the total expected annual ongoing costs of the proposed rule as well as a breakdown by the component 15 activities that comprise the ongoing costs for Type A FIs, Type B FIs, and Type C FIs. The bottom of the table shows the total estimated annual 1071 ongoing compliance cost for each type of institution, along with the total cost per application the financial institution processes. To produce the estimates in Table 14, the Bureau used the calculations described in Tables 6 and 7 above and the assumptions for each activity in Table 8. In the following analysis, the Bureau provides examples of these cost calculations for the largest drivers of ongoing costs.

**Table 14: Estimated ongoing costs per compliance task**

| No. | Activity | Type A FI | Type B FI | Type C FI |
|---|---|---|---|---|
| 1 | Transcribing data | 1,013 | 1,912 | 28,686 |
| 2 | Resolving reportability questions | 201 | 402 | 602 |
| 3 | Transfer to 1071 Data Management Software | 1,013 | 0 | 0 |
| 4 | Complete geocoding data | 132 | 528 | 300 |
| 5 | Standard annual edit and internal checks | 490 | 10,576 | 26,181 |
| 6 | Researching questions | 254 | 509 | 763 |
| 7 | Resolving question responses | 0 | 0 | 0 |
| 8 | Checking post-submission edits | 6 | 24 | 96 |
| 9 | Filing post-submission documents | 13 | 13 | 13 |
| 10 | 1071 Data Management System / geocoding software | 0 | 8,000 | 13,770 |
| 11 | Training | 638 | 3,189 | 21,262 |
| 12 | Internal audit | 0 | 423 | 121,750 |
| 13 | External audit | 3,500 | 5,000 | 0 |
| 14 | Exam preparation | 13 | 4,227 | 25,365 |
| 15 | Exam assistance | 112 | 672 | 4,478 |
| | **Total** | $7,386 | $35,476 | $243,266 |
| | Per application | $74 | $89 | $41 |

The Bureau estimates that a representative low complexity institution (*i.e.,* a Type A FI) would incur around $7,386 in total annual ongoing costs, or about $74 in total cost per application processed (assuming a representative 100 applications per year). For financial institutions of this type, the largest driver of ongoing costs is the fixed cost of the external audit, $3,500. Besides the audit cost, the largest drivers of the ongoing costs are activities that require employee time to complete. Activities like transcribing data, transferring data to the data management software, standard edits and internal checks, and training all require loan officer time. The Bureau expects training (activity number 11) to annually require approximately $638 for 6 representative loan officers to engage in two hours of training. The Bureau expects other time-dependent activities to cost around $1,000 each. For

example, the Bureau assumes that Type A FIs will spend around 18 hours transferring data to 1071 data management software (activity number 3) based on estimates of the required time to transfer data to HMDA data management software. At the assumed hourly compensation, our estimate is around $1,013 for the Type A FI institutions to transfer data. An assumption of around 17 total hours to conduct standard annual editing checks (activity number 5) with some savings assumed due to an online submission platform that automatically checks for errors, results in an estimated annual ongoing cost of $490.

The Bureau estimates that a representative middle complexity institution (*i.e.,* a Type B FI), which is somewhat automated, would incur approximately $35,476 in additional ongoing costs per year, or around $89 per application (assuming a representative 400 applications per year). The largest components of this ongoing cost are the expenses of the small business application management software and geocoding software (activity 10) in the form of an annual software subscription fee, and the external audit of the data (activity number 13). Using interviews of financial institutions conducted to determine compliance costs with HMDA, the Bureau found mid-range HMDA data management systems to be approximately $8,000 in annual costs; the Bureau believes that cost would be comparable in the small business lending context and thus applies that estimate here. This analysis assumes that the subscription purchase would be separate from HMDA management systems, but the development of a software to jointly manage HMDA and small business lending-related data would likely result in cost savings for both products. The Bureau also estimates that a Type B FI would spend around $5,000 on external audits of their small business loan application data. The Type B FI incurs employee time-related fixed costs conducting internal checks ($10,576), training ($3,189), and prepping for examinations ($4,227) but saves time and expense on data entry and geocoding by using data management software. As an example, the Bureau expects Type B FIs to have two full-time employees spend 40 hours each to prepare for an examination (activity number 14) resulting in a cost of $4,227, and have employees spend around 12 hours assisting with an examination (activity number 15) costing $672 annually.

The Bureau estimates a representative high complexity institution (*i.e.,* a Type C FI), would incur $243,266 of annual ongoing costs, or $41 per application (assuming a representative 6,000 application per year). The largest driver of costs for a Type C FI is the employee time required to conduct an internal audit. The assumed 2,304 hours of employee time results in nearly $122,000 of ongoing costs annually. Exam preparation, training, and standard annual and internal checks would be expected to cost $25,365, $26,262, and $26,181 each year, respectively. The Bureau also assumes that a Type C institution would need a subscription to a small business data management software near the upper bound of the range found in interviews with financial institutions, of $13,271.

The Bureau estimates that the total annual ongoing costs for depository institutions would be between about $310,000,000 and $330,000,000 per year, about $192,000,00 to $201,000,000 of which would be annual variable costs. The Bureau estimates that the total annual ongoing costs for nondepository institutions would be about $62,300,000, about $13,700,000 of which would be annual variable costs.

To understand the impacts of these cost estimates on the profits of depository institutions, the Bureau estimates the average total net income across all products per small business origination for all DIs by type.[901] There is no comprehensive published source of data on profits earned on small business credit transactions. The Bureau presents estimates of total net income per origination as an indication of a financial institution's ability to cover the additional expenses associated with the proposed rule. The Bureau estimates that banks and savings associations of Type A have an average net income per origination between $105,000 and $119,000. Credit Unions of Type A have an average net income per origination of $272,000. Assuming two applications per origination, a bank or savings association of Type A has a net income per application of approximately $53,000 to $60,000 and a credit union of the same type has a net income per application of about $136,000. The Bureau estimates that banks and savings associations of Type B have an average net income per origination between $50,000 and $57,000 or a net income per application between $25,000 and $29,000. The Bureau estimates that credit unions of Type B have an average net income per origination of $218,000 or an average net income per application of $109,000. The Bureau estimates that banks and savings associations of Type C have a net income per origination between $237,000 and $267,000, or, assuming three applications per origination, a net income per application between $79,000 and $89,000. The Bureau estimates that credit unions of Type C have an average net income per origination of $8,000, and average net income per application of about $3,000.

The Bureau presented early versions of these ongoing cost estimates in the SBREFA Outline and to SERs during the SBREFA process. Since then, the Bureau has adjusted its estimates to match the total number of data points in the proposed rule relative to the SBREFA Outline. The Bureau also adjusted its estimates in response to SER feedback.[902] Several SERs provided feedback that audit costs in the SBREFA Outline were likely too low for the lowest complexity (*i.e.,* Type A) institution. The Bureau adjusted the Type A FI external audit costs to match estimates provided to the Bureau from a SER of $3,500, an increase from the original $500–$1,000 expected. The Bureau continues to assume the representative low complexity institution employs only an external audit but acknowledges feedback from SERs that this is not necessarily true for all Type A institutions.

The Bureau also seeks additional comment on the cost estimates above. During the Small Business Panel Review Process, several SERs indicated other areas where costs estimates should be adjusted. A number of SERs remarked that the annual training costs estimates were likely too low. One SER estimated that training costs should be around 20 percent higher and several suggested that the number of employees the Bureau is assuming for training costs on an annual basis is too low. One SER, for example, stated that everyone who interacts with customers will need to be trained and several indicated that the scope of employees who will require training includes administrative and management staff, as well as those directly involved in the credit process. One SER stated that the hourly compensation the Bureau was using for

[901] There are no broadly available data on profit per application for nondepository institutions. The Bureau uses the FFIEC Bank and NCUA Credit Union Call Report data from December 31, 2019, accessed on June 25, 2021. The Bureau uses the same internal estimates of small business loan originations as discussed in part VI.B above and total net income across all products. For estimates of net income per origination and per application, the Bureau uses only net income per origination for depository institutions with over 25 originations in 2019.

[902] The SER feedback discussed in this section-by-section analysis can be found in the SBREFA Panel Report at 39.

cost calculations is assuming employees are too junior given the complexity of the process and should be around $25 higher. Another suggested that the transcribing data costs estimate is too low. One SER remarked that researching questions and the annual subscription cost of 1071 data management or geocoding software is too low. While the Bureau has not made specific changes in response to these suggestions, the Bureau seeks comment on its estimation methodology and cost estimates. In accordance with the balancing test discussed in part VI above, the Bureau expects to publicly release data collected under the rule, potentially with certain data modified or deleted. A more fulsome discussion of potential risks and harms from the publication of a public 1071 data can be found in part VI.C above, but in this section the Bureau acknowledges several potential costs to covered entities that stem from the publication of a public dataset under the proposed rule.

With the publicly disclosed data, users would be able to assess fair lending risks at the institution and market level, furthering section 1071's fair lending purpose. Several commenters to the Bureau's 2017 RFI expressed concerns, however, about costs related to these analyses.[903] During the SBREFA process, some SERs were concerned that published 1071 data could be used against financial institutions in litigation by class action attorneys or to harm their public reputations.[904] Depending on the extent of publicly disclosed data, the Bureau expects that some financial institutions could incur ongoing costs related to responding to reports of disparities in their small business lending practices. Some financial institutions could also experience reputational risks associated with high profile reports of existing disparities where more fulsome analysis of its business practices would conclude that the disparities do not support a finding of discrimination on a prohibited basis. In anticipation of needing to respond to outside analysis and potential reputational risks, it is possible that some financial institutions may choose to change their product offerings available to small businesses, underwriting or pricing practices, or overall participation in the small business lending market. These costs are difficult to quantify, but the Bureau seeks comment on the extent of the possible costs posed by litigation or reputational harm as a result of the proposed rule.

The Bureau also received feedback that financial institutions could face potential costs with the publication of a public dataset under the proposed rule either because potential clients would be concerned about their data being collected or because of the additional competitive pressure brought by a publicly available dataset. During the SBREFA process, a number of SERs were concerned that full disclosure of all 1071 data would result in the re-identification of small business applicants and potentially harm their privacy interests. Several SERs asserted that public knowledge of borrowing activity (even without any other potential harms) would be very concerning to some small businesses as some small business owners consider that information sensitive or deeply personal. Relatedly, one SER said that the collection of 1071 data, including personal or demographic information, could seem like an invasion of privacy by the financial institution, particularly to minorities, and thus prospective applicants may decide to seek financing elsewhere. A number of these SERs stated that 1071 data could be used to generate marketing lists, resulting in a financial institution's competitors stealing small business customers. Several SERs were concerned about the Bureau potentially making public pricing data. Several SERs were particularly focused on information regarding pricing and pricing structure being commercially sensitive to financial institutions. The Bureau seeks comment on this class of potential costs to covered financial institutions.

The Bureau seeks comment on its analysis of ongoing costs to covered financial institutions as described herein.

4. Costs to Small Businesses

The Bureau expects that any direct costs of the proposed rule on small businesses would stem from additional fields that the applicant may have to complete on credit applications due to the proposed rule compared to the baseline application process. This could include information such as the race, ethnicity, and sex of business owners or number of workers that are not typically required on business credit applications. However, the Bureau expects that the cost of completing these fields on applications to be negligible, especially compared to the overall cost of credit. Therefore, the Bureau focuses the rest of the discussion on the costs of small businesses to whether and how the Bureau expects financial institutions to pass on the costs of compliance with the proposed rule to small businesses and any possible effects on the availability of small business credit.

Three types of costs (one-time, fixed ongoing, and variable ongoing) have the potential to influence the price and availability of credit to small businesses. In a competitive marketplace, standard microeconomics suggests that lenders will extend loans up to the point at which the revenue from granting an additional loan is equal to the additional cost associated with the financial institution providing the loan. One-time costs and fixed ongoing costs affect the overall profitability of a lender's loan portfolio but do not affect the added profit from extending an additional loan. Variable ongoing costs, however, affect the profitability of each additional loan and will influence the number of loans a lender provides. Based on the Bureau's available evidence, it expects that the variable ongoing costs will be passed on in full to small business credit applicants in the form of higher prices or fees and does not expect there to be a significant reduction in small businesses' ability to access credit.

One-time and fixed ongoing costs affect the overall profitability of the loan portfolio and will be considered in the lender's decision to remain in the small business credit market or the market for specific small business credit products. A financial institution would find it worthwhile to incur the one-time costs associated with complying with the proposed rule if it expects to generate enough profit over multiple years to cover those costs. Each year, a financial institution would find it worthwhile to continue extending credit if the total expected revenue from its chosen quantity of loans is greater than the sum of its ongoing fixed and variable costs. A financial institution would find it worthwhile to exit the market, even if it had already incurred the one-time costs, if the total expected revenue from that year were less than the total expected ongoing costs. During the SBREFA process, the Bureau asked panelists how they would respond to the cost of complying with the proposed rule.[905] One nondepository institution participant did indicate that smaller firms in their industry may stop participating if one-time costs are too

[903] 82 FR 22318 (May 15, 2017).

[904] For example, one SER was concerned that published 1071 data could lead to increased litigation and thus a higher cost of credit for small businesses. Another SER expressed concern that pricing information could be misinterpreted by users of 1071 data (for example, according to the SER, higher pricing for one race might be used to infer discrimination when the pricing was in fact unrelated to the race of the applicant). Such a misinterpretation may cause reputational damage and consequently decrease applications.

[905] SBREFA Outline at 50–52.

high, particularly if small business lending is a secondary aspect of their business model.[906] Another nondepository institution participant indicated that significantly increasing the time between application and decision could occur due to the proposed requirements, which they said would threaten their ability to compete with other lenders.

In the One-Time Cost Survey, the Bureau asked respondents to rank a list of potential actions they may take in response to the compliance costs of implementing section 1071. Respondents ranked the following list: ''Raise rates or fees on small business products''; ''Raise rates/fees on other credit products''; ''Accept lower profits''; ''Exit some geographic markets''; ''Tighten underwriting standards''; ''Offer fewer or less complex products''; ''No longer offer small business credit products''; or ''Other'' with two write-in options. Respondents ranked these options from ''1'' to ''9'' indicating their most to least likely responses, where ''1'' was the most likely.

In order to analyze these responses, the Bureau pooled data only from respondents that answered both the ranking question and the number of originations question. The Bureau implemented these restrictions to the pool to eliminate responses from institutions that would not be required to report under the proposed rule. Of the 105 total respondents to the One-Time Cost Survey, 44 ranked every option and reported more than 25 originations in the last year. The Bureau will henceforth refer to these respondents as the ''impacts of implementation'' sample.

Table 15 presents the potential responses to implementing section 1071 and the average ranking assigned by respondents in the impacts of implementation sample. The responses are listed in order of most to least likely on average, where a lower average ranking number means that respondents ranked that response most likely. Consistent with economic theory, respondents reported that they would be most likely to raise rates or fees on small business products and other credit products. On average, respondents reported that they would be least likely to exit some geographic markets or cease offering small business credit products.

**Table 15: One-Time Cost Survey responses to impacts of implementation**

| Response | Average Ranking |
|---|---|
| Raise rates or fees on small business products | 1.77 |
| Raise rates/fees on other credit products | 2.93 |
| Tighten underwriting standards | 3.73 |
| Accept lower profits | 3.82 |
| Offer fewer or less complex products | 4.59 |
| Exit some geographic markets | 5.75 |
| No longer offer small business credit products | 6.57 |

The Bureau expects that the variable ongoing costs would be passed on in full to small business credit applicants in the form of higher prices or fees. This expectation is consistent with both standard microeconomic theory and feedback from SERs during the SBREFA process and respondents to the One-Time Cost Survey. Per application, the variable costs are approximately $28, $24, and $7 for Type A FIs, Type B FIs, and Type C FIs, respectively. Even if the variable costs were passed on in full to small business applicants in the form of higher interest rates or fees associated with a loan or line of credit (or even applicants in the form of application fees), the Bureau expects that this would comprise a small portion of the total cost of the average loan to the small business applicant.

As discussed above, the Bureau believes financial institutions would decide to remain in or exit the small business credit market based on the revenue generated from small business credit relative to the sum of one-time costs, fixed ongoing costs, and variable ongoing costs. The Bureau's total estimated one-time and ongoing costs are non-negligible and could potentially result in exit from the market by financial institutions that do not regularly originate many covered credit transactions. The Bureau's proposed coverage threshold of 25 covered credit transactions in two consecutive years could prevent some low-volume financial institutions from leaving the small business credit market in response to the compliance costs of the proposed rule. For example, the Bureau estimates that a Type A DI would incur one-time costs of $58,400 and fixed ongoing costs of $4,536. A depository institution that originates very few covered transactions every year may exit the market if it does not expect that profits, even over several years, would cover that one-time cost or if it does not expect annual revenues to exceed the annual ongoing costs. However, based on the net income per application estimates discussed above, the Bureau believes that institutions that are covered under the proposed rule (*i.e.,* above the proposed coverage threshold) will earn enough revenue to exceed these costs. Furthermore, the Bureau's findings during the SBREFA process and the respondents to the One-Time Cost Survey (discussed above) additionally support the Bureau's conclusion that the increase in compliance costs will likely be passed through to customers in the form of increased fees, rather than result in financial institutions leaving the small business credit market.[907]

[906] The SER feedback discussed herein can be found in the SBREFA Panel Report at 40.

[907] As stated in the SBREFA Panel Report at 40, ''[g]enerally, SERs did not suggest that they would leave the small business lending market in response to increased costs under the eventual 1071 rule.''

The Bureau seeks comment on other potential costs to small businesses not discussed here. The Bureau seeks comment on its analysis of costs to small businesses as described herein.

5. Alternatives Considered

This section discusses two categories of alternatives considered: Other methods for defining a covered financial institution and limiting the data points to those mandated by section 1071. The Bureau uses the methodologies discussed in parts VII.D and VII.E to estimate the impacts of these alternatives.

First, the Bureau considered multiple reporting thresholds for purposes of defining a covered financial institution. In particular, the Bureau considered whether to exempt financial institutions with fewer than 50 or 100 originations in each of the two preceding calendar years instead of 25 originations, as proposed. The Bureau also considered whether to exempt depository institutions with assets under $100 million or $200 million from section 1071's data collection and reporting requirements.

Under a 50-origination threshold, the Bureau estimates that about 2,900 to 3,100 depository institutions would report, which is approximately 1,100 fewer depository institutions relative to the proposed threshold of 25 originations. The Bureau estimates that about 2,700 to 2,900 banks and savings associations and about 200 credit unions would be covered under a 50-origination threshold. The Bureau does not have sufficient information to estimate how many fewer nondepository institutions would report under this alternative threshold. The Bureau estimates that the total one-time costs across all financial institutions associated with a 50-origination threshold would be about $252,000,000 to $264,000,000, a decrease of about $60,000,000 relative to the 25-origination threshold. The Bureau estimates that the total annual ongoing costs associated with this threshold would be about $357,000,000 to $374,000,000, a decrease of about $17,000,000 per year relative to the 25-origination threshold.

Under a 100-origination threshold, the Bureau estimates that about 1,800 to 2,000 depository institutions would report, which is approximately 2,200 fewer depository institutions relative to the proposed threshold of 25 originations. The Bureau estimates that about 1,700 to 1,900 banks and savings associations and about 100 credit unions would be covered under a 100-origination threshold The Bureau estimates that the total one-time costs across all financial institutions associated with a 100-origination threshold would be about $192,000,000 to $203,000,000, a decrease of $120,000,000 relative to the 25-origination threshold. The Bureau estimates that the total annual ongoing costs associated with this threshold would be about $332,000,000 to $347,000,000, a decrease of about $40,000,000 to $45,000,000 per year relative to the 25-origination threshold. Again, the Bureau does not have sufficient information to estimate how many fewer nondepository institutions would be required to report under this alternative.

The Bureau also considered $100 million and $200 million asset-based thresholds for depository institutions. For the purposes of considering these alternatives, the Bureau estimates how institutional coverage and costs would be different if the Bureau required a 25-origination threshold in addition to an asset-based threshold for depository institutions. The Bureau assumes that the alternative proposal would have been that a depository institution would be required to report its small business lending activity for 2019 if it had more than 25 originations in 2017 and 2018 and had assets over the asset-based threshold on December 31, 2018. The Bureau further assumes that if two institutions merged in 2019 then the resulting institution would be required to report if the sum of the separate institutions' assets on December 31, 2018 exceeded the asset-based threshold.

Under a $100 million asset-based threshold, the Bureau estimates that between 3,500 and 3,600 depository institutions would report, approximately 500 to 600 fewer depository institutions relative to a 25-origination threshold with no asset-based threshold. The Bureau estimates that about 3,100 to 3,300 banks and savings associations and about 300 credit unions would be covered under a 25-origination and $100 million asset-based threshold. The Bureau estimates that the total one-time costs across all financial institutions associated with the addition of a $100 million asset threshold would be about $284,000,000 to $291,000,000, a decrease of between $28,000,000 and $32,000,000 relative to the proposed rule. The Bureau estimates that the total annual ongoing costs associated with this threshold would be about $366,000,000 to $384,000,000, a decrease of about $7,000,000 to $9,000,000 per year relative to the 25-origination threshold with no asset-based threshold.

Under a $200 million asset-based threshold, the Bureau estimates that between 2,600 and 2,700 depository institutions would report, approximately 1,400 to 1,500 fewer depository institutions relative to a 25-origination threshold with no asset-based threshold. The Bureau estimates that about 2,300 to 2,400 banks and savings associations and about 300 credit unions would be covered under a 25-origination and $200 million asset-based threshold. The Bureau estimates that the total one-time costs across all financial institutions associated with the addition of a $200 million asset threshold would be about $240,000,000 to $244,000,000, a decrease of between $73,000,000 and $80,000,000 relative to the proposed rule. The Bureau estimates that the total annual ongoing costs associated with this threshold would be about $348,000,000 to $363,000,000, a decrease of about $25,000,000 to $29,000,000 per year relative to the 25-origination threshold with no asset-based threshold.

Second, the Bureau considered the costs and benefits for limiting its data collection to the data points required by the section 1071. In addition to the statutorily required data points enumerated in section 1071, the statute also requires financial institutions to collect and report any additional data that the Bureau determines would aid in fulfilling the purposes of section 1071. The Bureau is proposing several additional data points that rely solely on this authority. Specifically, the Bureau is proposing to require that financial institutions collect and report data on application channel, application recipient, denial reasons (for denied applications only), pricing information (for applications that are originated or approved but not accepted), NAICS code, number of workers, time in business, and number of principal owners. The Bureau has considered the impact of instead proposing only the collection of those data points required by statute.

Requiring the collection and reporting of only the statutory data points would result in a reduction in the fair lending benefit of the data compared to the proposed rule. For example, not collecting pricing information would obscure possible fair lending risk by covered financial institutions. Potential discriminatory behavior is not limited to the action taken on an application, but rather includes the terms and conditions under which applicants can access credit. If the Bureau did not collect pricing information, it would not be able to evaluate potential discriminatory behaviors on the basis of price. As

mentioned in part VII.F.1 above, several of the data points the Bureau is proposing under its ECOA section 704B(e)(2)(H) authority are useful in creating more accurate fair lending analyses. A reduction in the rule's ability to facilitate the enforcement of fair lending laws would negatively impact small businesses and small business owners relative to the proposed rule.

Limiting the rule's data collection to only the data points required under the statute would also reduce the ability of the rule to support the business and community development purpose of the section 1071. Not including pricing information would significantly reduce the ability of communities, governmental entities, and creditors to understand credit conditions available to small businesses. Not including NAICS code or time in business would reduce the ability of governmental entities to tailor programs that can specifically benefit young businesses or businesses in certain industries. This reduction in benefits might be disproportionately borne by women-owned and minority-owned small businesses.

Only requiring the collection and reporting of the statutory data points would have reduced the annual ongoing cost of complying with the proposed rule. Under this alternative, the estimated total annual ongoing costs for Type A FIs, Type B FIs, and Type C FIs would be $6,833; $34,004 and $233,209, respectively. Per application, the estimated ongoing cost would be $68, $85, and $39 for Type A FIs, Type B FIs, and Type C FIs, respectively. The estimated total annual market-level ongoing cost of reporting would be between $363,000,000 and $382,000,000 or about $10,000,000 per year less than under the proposed rule. As discussed above, respondents to the One-Time Cost Survey were instructed to assume that they would only report the mandatory data fields. Hence, the Bureau can only estimate how ongoing costs would be different under this alternative.

### *G. Potential Impact on Depository Institutions and Credit Unions With $10 Billion or Less in Total Assets*

As discussed above, the proposed rule would exclude financial institutions with fewer than 25 originated covered credit transactions in both of the two preceding calendar years. The Bureau believes that the benefits of the proposed rule to banks, savings associations, and credit unions with $10 billion or less in total assets will be similar to the benefits to covered financial institutions as a whole, discussed above. Regarding costs, other than as noted here, the Bureau also believes that the impact of the proposed rule on banks, savings associations, and credit unions with $10 billion or less in total assets will be similar to the impact for covered financial institutions as a whole. The primary difference in the impact on these institutions is likely to come from differences in the level of complexity of operations, compliance systems, and software, as well as number of product offerings and volume of originations of these institutions.

Based on FFIEC and NCUA Call Report data for December 2019, 10,375 of 10,525 banks, savings associations, and credit unions had $10 billion or less in total assets. The Bureau estimates that between 3,900 and 4,000 of such institutions would be subject to the proposed rule. The Bureau estimates that the market-level impact of the proposed rule on annual ongoing costs for banks, savings associations, and credit unions with $10 billion or less in assets would be between $151,000,000 and $171,000,000. Regarding one-time costs, the Bureau estimates that the market-level impact of the proposed rule for banks, savings associations, and credit unions with $10 billion or less in assets would be between $209,000,000 and $220,000,000. Using a 7 percent discount rate and a five-year amortization window, the estimated annualized one-time costs would be between $51,000,000 and $54,000,000.

The Bureau seeks comment on its analysis of the potential impact on depository institutions and credit unions with $10 billion or less in total assets as described herein.

### *H. Potential Impact on Small Businesses in Rural Areas*

The proposed rule would not directly impact small businesses in rural areas. However, as with all small businesses, small businesses in rural areas may bear some indirect costs of the proposal. This would occur if financial institutions serving rural areas are covered by the proposed rule and if those institutions pass on some or all of their cost of complying with the proposed rule to small businesses.

The source data from CRA submissions that the Bureau uses to estimate institutional coverage and market estimates provide information on the county in which small business borrowers are located. However, approximately 89 percent of banks did not report CRA data in 2019, and as a result the Bureau does not believe the reported data are robust enough to estimate the locations of the small business borrowers for the banks that do not report CRA data. The Credit Union Call Report data do not provide any information on the location of credit union borrowers. Nonetheless, the Bureau is able to provide some geographical estimates of institutional coverage based on depository institution branch locations.

The Bureau used the FDIC's Summary of Deposits to identify the location of all brick and mortar bank and savings association branches and the NCUA Credit Union Branch Information to identify the location of all credit union branch and corporate offices.[908] A bank, savings association, or credit union branch was defined as rural if it is in a rural county, as specified by the USDA's Urban Influence Codes.[909] A branch is considered covered by the proposed rule if it belongs to a bank, savings association, or credit union that the Bureau estimated would be included under the proposed threshold of 25 originations in 2017 and 2018. Using the estimation methodology discussed in part VII.D above, the Bureau estimates that about 90 to 92 percent of rural bank and savings association branches and about 95 percent of non-rural bank and savings association branches would be covered under the proposed rule. The Bureau estimates that about 27 percent of rural credit union branches and about 29 percent of non-rural credit union branches would be covered under the proposed rule.[910]

In a competitive framework in which financial institutions are profit maximizers, financial institutions would pass on variable costs to future small business applicants, but absorb one-time costs and increased fixed costs in the short run.[911] Based on previous

[908] *See* Fed. Deposit Ins. Corp., *Summary of Deposits (SOD)—Annual Survey of Branch Office Deposits* (last updated June 1, 2021), *https://www.fdic.gov/regulations/resources/call/sod.html.* The NCUA provides data on credit union branches in the quarterly Call Report Data files. *See* Nat'l Credit Union Admin., Call Report Quarterly Data, *https://www.ncua.gov/analysis/credit-union-corporate-call-report-data/quarterly-data* (last visited Aug. 5, 2021).

[909] This is the same methodology as used in the Bureau's rural counties list. *See* Bureau of Consumer Fin. Prot., *Rural and underserved counties list, https://www.consumerfinance.gov/compliance/compliance-resources/mortgage-resources/rural-and-underserved-counties-list/* (last visited July 28, 2020).

[910] The Bureau notes that most credit union branches do not belong covered credit unions because most credit unions did not report any small business loans in the NCUA Call Report data. Of the 5,437 credit unions that existed in December 2019, 4,359 (or 81.5 percent) reported no small business originations in 2017 or 2018.

[911] If markets are not perfectly competitive or financial institutions are not profit maximizers, then what financial institutions pass on may differ. For example, they may attempt to pass on one-time

HMDA rulemaking efforts and feedback through the SBREFA process, the following seven operational steps affect variable costs: Transcribing data, resolving reportability questions, transferring data to a data entry system, geocoding, researching questions, resolving question responses, and checking post-submission edits. Overall, the Bureau estimates that the impact of the proposed rule on variable costs per application is $28 for a Type A FI, $24 for type B FIs, and $7 for Type C FIs. The covered financial institutions that serve rural areas will attempt to pass these variable costs on to future small business applicants. Amortized over the life of the loan, this expense would represent a negligible increase in the cost of a covered credit transaction.

The One-Time Cost Survey can shed light on how financial institutions that serve rural communities will respond to the proposed rule. The Bureau asked respondents to the survey to report whether their institution primarily served rural or urban communities or an even mix. All respondents in the impacts of implementation sample answered this question. Of the 44 respondents in the impacts of implementation sample, 13 primarily serve rural communities, 15 primarily serve urban communities, and 16 serve an even mix. Table 16 presents the potential responses to implementing section 1071 and the average ranking assigned by respondents that serve rural communities, urban communities, an even mix, and all of the respondents in the impacts of implementation sample. The responses are listed in order of most to least likely on average across all respondents, where a lower average ranking number means that respondents ranked that response most likely. Respondents that primarily serve rural communities or an even mix rank raising rates or fees on small business or other credit products as the most likely response. These institutions also rank exiting some geographic markets and no longer offering small business credit products as the least likely response to the proposed rule.

**Table 16: One-Time Cost Survey responses to impacts of implementation by type of community served**

| Response | Rural (n = 13) | Urban (n = 15) | Even Mix (n = 16) | All (n = 44) |
|---|---|---|---|---|
| Raise rates or fees on small business products | 1.62 | 1.6 | 2.06 | 1.77 |
| Raise rates/fees on other credit products | 2.54 | 2.73 | 3.44 | 2.93 |
| Tighten underwriting standards | 3.46 | 4.27 | 3.44 | 3.73 |
| Accept lower profits | 3.77 | 4.2 | 3.5 | 3.82 |
| Offer fewer or less complex products | 4.62 | 4.07 | 5.06 | 4.59 |
| Exit some geographic markets | 5.69 | 5.13 | 6.38 | 5.75 |
| No longer offer small business credit products | 6.62 | 6.13 | 6.94 | 6.57 |

The Bureau thus does not anticipate any material adverse effect on credit access in the long or short term to rural small businesses.

The Bureau seeks comment on its analysis of potential impacts on small businesses in rural areas as described herein.

### VIII. Regulatory Flexibility Act Analysis

The Regulatory Flexibility Act (RFA) [912] generally requires an agency to conduct an initial regulatory flexibility analysis (IRFA) and a final regulatory flexibility analysis (FRFA) of any rule subject to notice-and-comment rulemaking requirements. These analyses must ''describe the impact of the proposed rule on small entities.'' [913] An IRFA or FRFA is not required if the agency certifies that the rule will not have a significant economic impact on a substantial number of small entities.[914] The Bureau also is subject to certain additional procedures under the RFA involving the convening of a panel to consult with small business representatives prior to proposing a rule for which an IRFA is required.[915] The Bureau has not certified that the proposed rule would not have a significant economic impact on a substantial number of small entities within the meaning of the RFA. Accordingly, the Bureau convened and chaired a Small Business Review Panel under SBREFA to consider the impact of the proposed rule on small entities that would be subject to that rule and to obtain feedback from representatives of such small entities. The Small Business Review Panel for this rulemaking is discussed below in part VIII.A. The Bureau is also publishing an IRFA. Among other things, the IRFA estimates the number of small entities that will be subject to the proposed rule and

costs and increases in fixed costs, or they may not be able to pass on variable costs. Furthermore, some financial institutions may exit the market in the long run. However, other financial institutions may also enter the market in the long run.

[912] 5 U.S.C. 601 *et seq.*

[913] 5 U.S.C. 603(a). For purposes of assessing the impacts of the proposed rule on small entities, ''small entities'' is defined in the RFA to include small businesses, small not-for-profit organizations, and small government jurisdictions. 5 U.S.C. 601(6). A ''small business'' is determined by application of SBA regulations and reference to the NAICS classifications and size standards. 5 U.S.C. 601(3). A ''small organization'' is any ''not-for-profit enterprise which is independently owned and operated and is not dominant in its field.'' 5 U.S.C. 601(4). A ''small governmental jurisdiction'' is the government of a city, county, town, township, village, school district, or special district with a population of less than 50,000. 5 U.S.C. 601(5).

[914] 5 U.S.C. 605(b).

[915] 5 U.S.C. 609.

describes the impact of that rule on those entities. The IRFA for this rulemaking is set forth below in part VIII.B.

*A. Small Business Review Panel*

Under section 609(b) of the RFA, as amended by SBREFA and the Dodd-Frank Act,[916] the Bureau must seek, prior to conducting the IRFA, information from representatives of small entities that may potentially be affected by its proposed rules to assess the potential impacts of that rule on such small entities.[917] Section 609(b) sets forth a series of procedural steps with regard to obtaining this information. The Bureau first notifies the Chief Counsel for Advocacy of the SBA (Chief Counsel) and provides the Chief Counsel with information on the potential impacts of the proposed rule on small entities and the types of small entities that might be affected.[918] Not later than 15 days after receipt of the formal notification and other information described in section 609(b)(1) of the RFA, the Chief Counsel then identifies the small entity representatives, the individuals representative of affected small entities for the purpose of obtaining advice and recommendations from those individuals about the potential impacts of the proposed rule.[919] The Bureau convenes a Small Business Review Panel for such rule consisting wholly of full-time Federal employees of the office within the Bureau responsible for carrying out the proposed rule, OIRA within the OMB, and the Chief Counsel.[920] The Small Business Review Panel reviews any material the Bureau has prepared in connection with the SBREFA process and collects the advice and recommendations of each individual small entity representative identified by the Bureau after consultation with the Chief Counsel on issues related to sections 603(b)(3) through (b)(5) and 603(c) of the RFA.[921] No later than 60 days after the date the Bureau convenes the Small Business Review Panel, the panel reports on the comments of the small entity representatives (SERs) and its findings as to the issues on which the Small Business Review Panel consulted with the SERs, and the report is made public as part of the rulemaking record.[922] Where appropriate, the Bureau modifies the proposed rule or the IRFA in light of the foregoing process.[923]

On August 10, 2020, the Bureau provided the Chief Counsel (as well as OIRA) with the formal notification and other information required under section 609(b)(1) of the RFA. To obtain feedback from small entities to inform the Small Business Review Panel pursuant to section 609(b)(2) and (4) of the RFA, the Bureau, in consultation with the Chief Counsel, identified several categories of small entities that may be subject to the proposed rule for purposes of the IRFA: Depository institutions; fintech lenders and MCA providers; commercial finance companies; nondepository CDFIs; nondepository lenders of other 5+ unit mortgages; Farm Credit System members; and governmental lending entities. Section 3 of the IRFA, in part VIII.B.3 below, describes in greater detail the Bureau's analysis of the number and types of entities that may be affected by the proposed rule. Having identified the categories of small entities that may be subject to the proposed rule for purposes of an IRFA, the Bureau then, in consultation with the Chief Counsel and OIRA, selected 20 SERs to participate in the SBREFA process. As discussed in section 7 of the SBREFA Panel Report,[924] described below, the SERs included representatives from each of the categories identified by the Bureau and comprised a diverse group of individuals with regard to geography and type of locality (*i.e.,* rural, urban, suburban, or metropolitan areas).

On October 15, 2020, the Bureau formally convened the Small Business Review Panel pursuant to section 609(b)(3) of the RFA. Afterwards, to collect the advice and recommendations of the SERs under section 609(b)(4) of the RFA, the Small Business Review Panel held a total of four Panel Outreach Meetings with the SERs during October 19–22, 2020, conducted online via video conference. To help SERs and to facilitate an informed and detailed discussion of the proposals under consideration, discussion questions for the SERs were included throughout the Bureau's SBREFA Outline.[925] In advance of the Panel Outreach Meetings, the Bureau, SBA's Office of Advocacy, and OIRA held a series of video conferences with the SERs to describe the Small Business Review Process, obtain important background information about each SER's current business practices, and begin discussions on selected portions of the proposals under consideration. All 20 SERs participated in the Panel Outreach Meetings. The Panel also invited SERs to submit written feedback by November 9, 2020; the Bureau received written feedback from 15 of the SERs.[926]

The Bureau also invited other stakeholders to submit feedback on the SBREFA Outline, which was due by December 14, 2020. *See generally* SBREFA Outline. Feedback from these other stakeholders was not considered by the Panel and is not reflected in the Panel Report. See part III above for additional information.

On December 15, 2020, the Bureau publicly released the written SBREFA Panel Report.[927] The SBREFA Panel Report includes the following:

Background information on the proposals under consideration at the time; information on the types of small entities that would be subject to those proposals and on the SERs who were selected to advise the Panel; a summary of the Panel's outreach to obtain the advice and recommendations of those small entity representatives; a discussion of the comments and recommendations of the small entity representatives; and a discussion of the Panel's findings, focusing on the statutory elements required under section 603 of the RFA.[928]

In preparing this proposed rule and the IRFA, the Bureau has considered the

[916] 5 U.S.C. 609(b).

[917] *Id.*

[918] 5 U.S.C. 609(b)(1).

[919] 5 U.S.C. 609(b)(2).

[920] 5 U.S.C. 609(b)(3).

[921] 5 U.S.C. 609(b)(4). As described in part VIII.B below, sections 603(b)(3) through (5) and 603(c) of the RFA, respectively, require a description of and, where feasible, provision of an estimate of the number of small entities to which the proposed rule will apply; a description of the projected reporting, record keeping, and other compliance requirements of the proposed rule, including an estimate of the classes of small entities which will be subject to the requirement and the type of professional skills necessary for preparation of the report or record; an identification, to the extent practicable, of all relevant Federal rules which may duplicate, overlap, or conflict with the proposed rule; and a description of any significant alternatives to the proposed rule which accomplish the stated objectives of applicable statutes and which minimize any significant economic impact of the proposed rule on small entities. 5 U.S.C. 603(b)(3) through (5), (c).

[922] 5 U.S.C. 609(b)(5).

[923] 5 U.S.C. 609(b)(6).

[924] *See* SBREFA Panel Report at 15.

[925] These questions also appeared in a shorter Discussion Guide for Small Entity Representatives. Bureau of Consumer Fin. Prot., *Small Business Advisory Review Panel, Consumer Financial Protection Bureau, Small Business Lending Data Collection Rulemaking, Discussion Guide for Small Entity Representatives* (Sept. 15, 2020), *https://files.consumerfinance.gov/f/documents/cfpb_1071-sbrefa_discussion-guide_2020-09.pdf.*

[926] This written feedback is attached as appendix A to the SBREFA Panel Report.

[927] Bureau of Consumer Fin. Prot., *Consumer Financial Protection Bureau Releases Report on Implementing the Dodd-Frank Act's Small Business Lending Data Collection Requirement* (Dec. 15, 2021), *https://www.consumerfinance.gov/about-us/newsroom/consumer-financial-protection-bureau-releases-report-on-implementing-the-dodd-frank-acts-small-business-lending-data-collection-requirement/.*

[928] 5 U.S.C. 609(b)(5).

feedback from SERs through the SBREFA process and the findings and recommendations in the SBREFA Panel Report. The section-by-section analysis of the proposed rule in part V above and the IRFA discuss this feedback and the specific findings and recommendations of the Panel, as applicable. The SBREFA process provided the Panel and the Bureau with an opportunity to identify and explore opportunities to minimize the burden of the proposed rule on small entities while achieving the rule's purposes. It is important to note, however, that the Panel prepared the SBREFA Panel Report at a preliminary stage of the proposal's development and that the SBREFA Panel Report—in particular, the Panel's findings and recommendations—should be considered in that light. Also, any options identified in the SBREFA Panel Report for reducing the proposed rule's regulatory impact on small entities were expressly subject to further consideration, analysis, and data collection by the Bureau to ensure that the options identified were practicable, enforceable, and consistent with section 1071 of the Dodd-Frank Act and its statutory purposes. The proposed rule and the IRFA reflect further consideration, analysis, and data collection by the Bureau.

*B. Initial Regulatory Flexibility Analysis*

Under RFA section 603(a), an IRFA ''shall describe the impact of the proposed rule on small entities.'' [929] Section 603(b) of the RFA sets forth the required elements of the IRFA. Section 603(b)(1) requires the IRFA to contain a description of the reasons why action by the agency is being considered.[930] Section 603(b)(2) requires a succinct statement of the objectives of, and the legal basis for, the proposed rule.[931] The IRFA further must contain a description of and, where feasible, an estimate of the number of small entities to which the proposed rule will apply.[932] Section 603(b)(4) requires a description of the projected reporting, recordkeeping, and other compliance requirements of the proposed rule, including an estimate of the classes of small entities that will be subject to the requirement and the types of professional skills necessary for the preparation of the report or record.[933] In addition, the Bureau must identify, to the extent practicable, all relevant Federal rules which may duplicate, overlap, or conflict with the proposed rule.[934] Furthermore, the Bureau must describe any significant alternatives to the proposed rule which accomplish the stated objectives of applicable statutes and which minimize any significant economic impact of the proposed rule on small entities.[935] Finally, as amended by the Dodd-Frank Act, RFA section 603(d) requires that the IRFA include a description of any projected increase in the cost of credit for small entities, a description of any significant alternatives to the proposed rule which accomplish the stated objectives of applicable statutes and which minimize any increase in the cost of credit for small entities (if such an increase in the cost of credit is projected), and a description of the advice and recommendations of representatives of small entities relating to the cost of credit issues.[936]

1. Description of the Reasons Why Agency Action Is Being Considered

As discussed in part I above, section 1071 of the Dodd-Frank Act amended ECOA to require that financial institutions collect and report to the Bureau certain data regarding applications for credit for women-owned, minority-owned, and small businesses.[937] Section 1071's statutory purposes are (1) to facilitate enforcement of fair lending laws, and (2) to enable communities, governmental entities, and creditors to identify business and community development needs and opportunities of women-owned, minority-owned, and small businesses.

Section 1071 specifies a number of data points that financial institutions are required to collect and report, and also provides authority for the Bureau to require any additional data that the Bureau determines would aid in fulfilling its statutory purposes. Section 1071 also contains a number of other requirements, including those that address restricting the access of underwriters and other persons to certain 1071 data, publication of 1071 data, and the Bureau's discretion to modify or delete data prior to publication in order to advance a privacy interest.

As discussed throughout this notice, Congress amended ECOA by adding section 1071, which directs the Bureau to adopt regulations governing the collection and reporting of small business lending data. Section 1071 directs the Bureau to prescribe such rules and issue such guidance as may be necessary to carry out, enforce, and compile data pursuant to section 1071, and permits the Bureau to adopt exceptions to any requirement or to exempt financial institutions from the requirements of section 1071 as the Bureau deems necessary or appropriate to carry out the purposes of section 1071.

In addition, as discussed in part II above, currently available data on small business lending are fragmented, incomplete, and not standardized, making it difficult to make meaningful comparisons across products, financial institutions, and over time. This hinders attempts by policymakers and other stakeholders to understand the size, shape, and dynamics of the small business lending marketplace, including the interaction of supply and demand, as well as potentially problematic lending practices, gaps, or trends in funding that may be holding back some communities.[938]

Data collected under the proposed rule would constitute the largest and most comprehensive data in the United States on credit availability for small businesses. The proposed data collection would also provide an unprecedented window into the small business lending market, and such transparency will benefit financial institutions covered by the rule. The public data published under the proposed rule would allow financial institutions to better understand the demand for small business credit products and the conditions under which they are being supplied by other lenders. Lenders would likely use the data to understand small business lending market conditions more effectively and at a more granular level than is possible with existing data sources, such as Call Reports, data from public lending programs, or privately purchased data. Data collected under the proposed rule could enable lenders to identify promising opportunities to extend credit.

The proposed rule will also provide some reduction of the compliance burden of fair lending reviews for lower risk financial institutions by reducing the ''false positive'' rates during fair lending review prioritization by regulators. Currently, financial institutions are subject to fair lending reviews by regulators to ensure that they

[929] 5 U.S.C. 603(a).

[930] 5 U.S.C. 603(b)(1).

[931] 5 U.S.C. 603(b)(2).

[932] 5 U.S.C. 603(b)(3).

[933] 5 U.S.C. 603(b)(4).

[934] 5 U.S.C. 603(b)(5).

[935] 5 U.S.C. 603(c).

[936] 5 U.S.C. 603(d)(1); Dodd-Frank Act section 1100G(d)(1), 124 Stat. 2112.

[937] ECOA section 704B.

[938] While Call Report and CRA data provide some indication of the level of supply of small business credit, the lack of data on small business credit applications makes demand for credit by small businesses more difficult to assess, including with respect to local markets or protected classes.

are complying with the ECOA in their small business lending processes. Data reported under the proposed rule will allow regulators to prioritize fair lending reviews of lenders with higher risk of potential fair lending violations, which reduces the burden on institutions with lower fair lending risk.

The proposed rule effectuates Congress's specific mandate to the Bureau to adopt rules to implement section 1071. For a further description of the reasons why agency action is being considered, see the background discussion for the proposed rule in part II above.

2. Succinct Statement of the Objectives of, and Legal Basis for, the Proposed Rule

This rulemaking has multiple objectives. The proposed rule is intended to advance the two statutory purposes of section 1071, which are (1) facilitating enforcement of fair lending laws and (2) enabling communities, governmental entities, and creditors to identify business and community development needs and opportunities of women-owned, minority-owned, and small businesses. To achieve these objectives, the proposed rule would require covered financial institutions to collect and report certain data on applications for covered credit transactions for small businesses, including minority-owned and women-owned small businesses. The data to be collected and reported would include a number of statutorily required data fields regarding small business applications, as well as several additional data fields that the Bureau preliminarily determines would help fulfill the purposes of section 1071. The Bureau would make available to the public, annually on the Bureau's website, the data submitted to it by financial institutions, subject to deletions or modifications made by the Bureau, at its discretion, if the Bureau determines that such deletions or modifications would advance a privacy interest.

As described above, the Dodd-Frank Act amended ECOA by adding section 1071, which directs the Bureau to adopt regulations governing the collection and reporting of small business lending data. ECOA section 704B(g)(1) grants the Bureau general rulemaking authority, providing that the Bureau shall prescribe such rules and issue such guidance as may be necessary to carry out, enforce, and compile data pursuant to section 1071. Section 704B(g)(2) also permits the Bureau to adopt exceptions to any requirement of section 1071 and to conditionally or unconditionally exempt any financial institution or class of financial institutions from the requirements of section 1071, as the Bureau deems necessary or appropriate to carry out the purposes of section 1071. In addition, section 703(a) of ECOA authorizes the Bureau to prescribe regulations to carry out the purposes of ECOA.

Much of section 1071 establishes requirements or obligations for financial institutions that the Bureau would implement in this proposed rule. ECOA section 704B(e)(2) requires that the information compiled and maintained be itemized in order to clearly and conspicuously disclose an enumerated list of data points. Section 704B(e)(2)(H) requires financial institutions to collect and report any additional data that the Bureau determines would aid in fulfilling the purposes of section 1071. Other parts of section 1071 require the Bureau to adopt regulations to implement certain requirements, including how financial institutions must compile and maintain data pursuant to section 1071, and the form of information made available by financial institutions to the public and the form and manner that the Bureau itself should make 1071 data available to the public generally. Additional section 1071 provisions give the Bureau the discretionary authority to delete or modify 1071 data before making it available to the public if the Bureau determines that the deletion or modification of the data would advance a privacy interest, and to compile and aggregate 1071 data for its own use, as well as to make public such compilations of aggregate data. The legal basis for the proposed rule is discussed in detail in the legal authority analysis in part IV and in the section-by-section analyses in part V above.

3. Description of and, Where Feasible, Provision of an Estimate of the Number of Small Entities to Which the Proposed Rule Will Apply

As discussed in the SBREFA Panel Report,[939] for the purposes of assessing the impacts of the proposed rule on small entities, ''small entities'' is defined in the RFA to include small businesses, small nonprofit organizations, and small government jurisdictions.[940] A ''small business'' is determined by application of SBA regulations in reference to the North American Industry Classification System (NAICS) classification and size standards.[941] Under such standards, the Bureau identified several categories of small entities that may be subject to the proposed provisions: Depository institutions; fintech lenders and MCA providers; commercial finance companies; nondepository CDFIs; nondepository lenders of other 5+ unit mortgages; Farm Credit System members; and governmental lending entities. The NAICS codes covered by these categories are described below.

The following table provides the Bureau's estimate of the number and types of entities that may be affected by the proposed rule:

[939] *See* SBREFA Panel Report at 41–42.

[940] 5 U.S.C. 601(6).

[941] The current SBA size standards are found on SBA's website, Small Bus. Admin., *Table of size standards* (Aug. 19, 2019), *http://www.sba.gov/content/table-small-businesssize-standards.*

**Table 17: Estimated number of affected entities and small entities by category**

| Category | NAICS | Small Entity Threshold | Est. Total Covered Financial Institutions | Est. Number of Small Financial Institutions |
|---|---|---|---|---|
| Depository Institutions | 522110, 522120, 522130, 522210 | $600 million in assets | 4,100 | 2,700 |
| Fintech Lenders and MCAs | 522298, 522291, 522320, 518210 | $35 million (NAICS 518210); $41.5 million (NAICS 522298, 522291, 522320) | 130 | 117 |
| Commercial Finance Companies | 511210, 532411, 532490, 522220, 522291 | $41.5 million (NAICS 511210 and 522220); $35 million (NAICS 532411, 532490, and 522291) | 300 | 270 |
| Nondepository CDFIs | 522390, 523910, 813410, 522310 | $8 million (NAICS 522310, 813410); $22 million (NAICS 522390); $41.5 million (NAICS 523910) | 240 | 228 |
| Nondepository Lenders of Other 5+ Unit Mortgages | 522292, 522310 | $41.5 million | 50 | 45 |
| Farm Credit System members | 522298 | $41.5 million | 72 | 18 |
| Governmental Lending Entities | NA | Population below 50,000 | 100 | 0 |

The following paragraphs describe the categories of entities that the Bureau expects would be affected by the proposed rule.

*Depository institutions (banks and credit unions):* The Bureau estimates that there are about 4,100 banks, savings associations, and credit unions engaged in small business lending that originate enough covered transactions to be covered by the proposed rule.[942] These companies potentially fall into four different industry categories, including ''Commercial Banking'' (NAICS 522110), ''Savings Institutions'' (NAICS 522120), ''Credit Unions'' (NAICS 522130), and ''Credit Card Issuing'' (NAICS 522210). All of these industries have a size standard threshold of $600 million in assets. The Bureau estimates that about 2,700 of these institutions are small entities according to this threshold. See part VII.D above for more detail on how the Bureau arrived at these estimates.

*Fintech lenders and MCA providers:* As discussed in more detail in part II.D above, the Bureau estimates that there are about 130 fintech lenders and MCA providers engaged in small business lending that originate enough covered transactions to be covered by the proposed rule. These companies span multiple industries, including ''All Other Nondepository Credit Intermediation'' (NAICS 522298), ''Consumer Lending'' (NAICS 522291), ''Financial Transactions, Processing, Reserve, and Clearinghouse Activities'' (NAICS 522320), and ''Data Processing, Housing and Related Services'' (NAICS 518210). All of these industries have a size standard threshold of $35 million in sales (NAICS 518210) or $41.5 million in sales (all other NAICS). The

[942] The Bureau notes that the category of depository institutions also includes CDFIs that are also depository institutions.

Bureau assumes that about 90 percent, or 117, of these entities are small according to these size standards.

*Commercial finance companies:* As discussed in more detail in part II.D above, the Bureau estimates that there are about 300 commercial finance companies, including captive and independent financing, engaged in small business lending that originate enough covered credit transactions to be covered by the proposed rule. These companies span multiple industries, including ''Software Publishers'' (NAICS 511210), ''Commercial Air, Rail, and Water Transportation Equipment Rental and Leasing'' (NAICS 532411), ''Other Commercial and Industrial Machinery and Equipment Rental and Leasing'' (NAICS 532490), ''Sales financing'' (NAICS 522220) and ''Consumer Lending'' (NAICS 522291). These industries have size standard thresholds of $41.5 million in sales (NAICS 511210 and 522220) or $35 million in sales (NAICS 532411, 532490, and 522291). The Bureau assumes that about 90 percent, or 270, commercial finance companies are small according to these size standards.

*Nondepository CDFIs:* As discussed in more detail in part II.D above, the Bureau estimates that there are 240 nondepository CDFIs engaged in small business lending that originate enough covered credit transactions to be covered by the proposed rule. CDFIs generally fall into ''Activities Related to Credit Intermediation (Including Loan Brokers)'' (NAICS 522390), ''Miscellaneous Intermediation'' (NAICS 523910), ''Civic and Social Organizations'' (NAICS 813410), and ''Mortgage and Nonmortgage Loan Brokers'' (NAICS 522310). These industries have size standard thresholds of $8 million in sales (NAICS 522310, 813410), $22 million in sales (NAICS 522390), and $41.5 million in sales (NAICS 523910). The Bureau assumes that about 95 percent, or 228, nondepository CDFIs are small entities.

*Nondepository lenders of other 5+ unit mortgages:* As discussed in more detail in part II.D above, the Bureau estimates that there are about 50 nondepository mortgage lenders engaged in small business lending that originate enough covered credit transactions to be covered by the proposed rule. These institutions are in either ''Real estate credit'' (NAICS 522292) or ''Mortgage and Nonmortgage Loan Brokers'' (NAICS 522310). These industries both have a size standard threshold of $41.5 million. The Bureau estimates that about 90 percent, or 45, nondepository mortgage lenders are small entities.

*Farm Credit System members:* The Bureau estimates that there are 72 members of the Farm Credit System (banks and associations) that are engaged in small business lending and that originate enough covered credit transactions to be covered by the proposed rule.[943] These institutions are in the ''All Other Nondepository Credit Intermediation'' (NAICS 522298) industry. The size standard for this industry is $41.5 million in sales. The Bureau estimates that 18 members of the Farm Credit System are small entities.

*Governmental lending entities:* As discussed in more detail in part II.D above, the Bureau estimates that there are about 100 governmental lending entities engaged in small business lending that originate enough covered credit transactions to be covered by the proposed rule. ''Small governmental jurisdictions'' are the governments of cities, counties, towns, townships, villages, school districts, or special districts, with a population of less than fifty thousand. The Bureau assumes that none of the governmental lending entities covered by the proposed rule are considered small.

4. Projected Reporting, Recordkeeping, and Other Compliance Requirements of the Proposed Rule, Including an Estimate of the Classes of Small Entities Which Will Be Subject to the Requirement and the Type of Professional Skills Necessary for the Preparation of the Report

*Reporting requirements.* ECOA section 704B(f)(1) provides that ''[t]he data required to be compiled and maintained under [section 1071] by any financial institution shall be submitted annually to the Bureau.'' Section 1071 requires financial institutions to collect and report information regarding any application for ''credit'' made by women-owned, minority-owned, and small businesses. The Bureau is also proposing that the following transactions are not covered by the rule: leases, factoring, consumer-designated credit, credit secured by certain properties, trade credit, public utilities credit, securities credit, and incidental credit.

Under the proposed rule, financial institutions would be required to report data on small business credit applications if they originated at least 25 covered transactions in each of the previous two calendar years. The Bureau is proposing that 1071 data collection be done on a calendar-year basis and submitted to the Bureau by a specified time after the end of each calendar year. The section-by-section analyses of the proposed rule in part V above discuss the required data points and the scope of the proposed rule in greater detail. More information is also available in section 3 of the SBREFA Panel Report.

*Recordkeeping requirements.* ECOA section 704B(f)(2)(A) requires that information compiled and maintained under section 1071 be ''retained for not less than 3 years after the date of preparation.'' The Bureau is proposing that financial institutions retain 1071 data for at least three years after it is submitted to the Bureau. Further, 704B(f)(2) generally requires that the information compiled and maintained by financial institutions, and submitted annually to the Bureau, be made available to the public. Publication of these data would fill existing gaps in the public's general understanding of the small business lending environment and help identify potential fair lending concerns regarding small businesses as well as the needs and opportunities for both business and community development. In accordance with 704B(e)(3), the Bureau is also proposing a prohibition on including certain personally identifiable information about any individuals associated with small business applicants in the data that a financial institution is required to compile, maintain, and report to the Bureau, other than information specifically required to be collected and reported (such as the race, sex, and ethnicity of principal owners). Financial institutions must, unless subject to an exception, limit the access of a certain officers and employees to applicants' responses to the inquiries regarding women-owned and minority-owned business status, as well as the race, sex, and ethnicity of principal owners. In addition, applicants' responses to the inquiries regarding women-owned and minority-owned business status, as well as the race, sex, and ethnicity of principal owners, must be maintained separately from the application and accompanying information.

*Costs to small entities.* The Bureau expects that the proposed rule may impose one-time and ongoing costs on small-entity providers of credit to small businesses. The Bureau has preliminarily identified eight categories of one-time costs that make up the components necessary for a financial

[943] Fed. Farm Credit Banks Funding Corp., *Farm Credit 2019 Annual Information Statement of the Farm Credit System,* at 7 (Feb. 28, 2020), *https://www.farmcreditfunding.com/ffcb_live/serve/public/pressre/finin/report.pdf?assetId=395570.* The Bureau notes that Farm Credit System banks do not report FFIEC Call Reports and are thus not counted in the number of banks and savings associations discussed above.

institution to develop the infrastructure to collect and report data required by the eventual 1071 rule. Those categories are preparation/planning; updating computer systems; testing/validating systems; developing forms/applications; training staff and third parties (such as dealers and brokers); developing policies/procedures; legal/compliance review; and post-implementation review of compliance policies and procedures. The Bureau conducted a survey regarding potential one-time implementation costs for section 1071 compliance targeted at financial institutions who extend small business credit. The Bureau used the results of this survey to estimate the one-time costs for financial institutions covered by the proposed rule using the methodology described in part VII.E.1 above. The Bureau estimates that depository institutions with the lowest level of complexity in compliance operations (*i.e.,* Type A DIs) would incur one-time costs of $58,400. The Bureau estimates that depository institutions with a middle level of complexity in compliance operations (*i.e.,* Type B DIs) would incur one-time costs of $44,500. The Bureau estimates that depository institutions with the highest level of complexity in compliance operations (*i.e.,* Type C DIs) would incur one-time costs of $75,700. Finally, the Bureau estimates that Non-DIs would incur one-time costs of $95,200.

The Bureau estimates that the overall market impact of one-time costs for small depository institutions will be between $143,000,000 and $153,000,000.[944] The Bureau estimates that the overall market impact of one-time costs for Non-DIs will be $63,000,000.

Adapting ongoing cost methodology from previous HMDA rulemaking efforts, the Bureau identified 15 specific data collection and reporting activities that would impose ongoing costs to financial institutions covered by the rule.[945] The Bureau estimated that financial institutions with the lowest level of complexity in compliance operations (*i.e.* Type A FIs) would incur around $7,386 in total annual ongoing costs, or about $74 in total cost per application processed (assuming a representative 100 applications per year). For financial institutions of this type, the largest drivers of the ongoing costs are activities that require employee time to complete. Activities like transcribing data, transferring data to the data management software, standard edits and internal checks, and training all require loan officer time. The Bureau estimates that financial institutions with a middle level of complexity in compliance operations (*i.e.* Type B FIs), which is somewhat automated, would incur approximately $35,476 in additional ongoing costs per year, or around $89 per application (assuming a representative 400 applications per year). The largest components of this ongoing cost are the expenses of the small business application management software and geocoding software (in the form of an annual software subscription fee) and the external audit of the data. The Bureau estimates that financial institutions with the highest level of complexity in compliance operations (*i.e.* Type C FIs), which is significantly automated, would incur approximately $243,266 in additional ongoing costs per year, or around $41 per application (assuming a representative 6,000 applications per year). The largest components of this ongoing cost are the cost of an internal audit, transcribing data, and annual edits and internal checks.

The Bureau estimates that the overall market impact of ongoing costs for small entities will be between $112,000,000 and $126,000,000 per year.

Estimate of the classes of small entities that will be subject to the requirement and the type of professional skills necessary for the preparation of the report or record. Section 603(b)(4) of the RFA also requires an estimate of the type of professional skills necessary for the preparation of the reports or records. The recordkeeping and compliance requirements of the proposed rule that would affect small entities are summarized above. Based on outreach with financial institutions, vendors, and governmental agency representatives, the Bureau classified the operational activities that financial institutions would likely use for Section 1071 data collection and reporting into 15 operational ''tasks'' which can be further grouped into four ''primary tasks.'' These are:

1. Data collection: Transcribing data, resolving reportability questions, and transferring data to a 1071 data management system.

2. Reporting and resubmission: Geocoding, standard annual edit and internal checks, researching questions, resolving question responses, checking post-submission edits, filing post-submission documents, and using vendor data management software.

3. Compliance and internal audits: Training, internal audits, and external audits.

4. Section 1071-related exams: Exam preparation and exam assistance.

All these tasks are related to the preparation of reports or records and most of them are performed by compliance personnel in the compliance department of financial institutions. For some financial institutions, however, the data intake and transcribing stage could involve loan officers or processors whose primary function is to evaluate or process loan applications. For example, at some financial institutions the loan officers would take in information from the applicant to complete the application and input that information into the reporting system. However, the Bureau believes that such roles generally do not require any additional professional skills related to recordkeeping or other compliance requirements of this proposed rule that are not otherwise required during the ordinary course of business for small entities.

The type of professional skills required for compliance varies depending on the particular task involved. For example, data transcribing requires data entry skills. Transferring data to a data entry system and using vendor data management software requires knowledge of computer systems and the ability to use them. Researching and resolving reportability questions requires a more complex understanding of the regulatory requirements and the details of the relevant line of business. Geocoding requires skills in using the geocoding software, web systems, or, in cases where geocoding is difficult, knowledge of the local area in which the property is located. Standard annual editing, internal checks, and post-submission editing require knowledge of the relevant data systems, data formats, and section 1071 regulatory requirements in addition to skills in quality control and assurance. Filing post-submission documents requires skills in information creation, dissemination, and communication. Training, internal audits, and external audits require communications skills, educational skills, and regulatory knowledge. Section 1071-related exam preparation and exam assistance involve knowledge of regulatory requirements, the relevant line of business, and the relevant data systems.

[944] The Bureau notes that the variation in this range comes primarily from the uncertainty in the number of originations made by small banks and savings associations. The range does not fully account for the uncertainty associated with estimates of the one-time costs for each type of institution.

[945] The Bureau applied the same methodology for the ongoing costs for small entities as that found in part VII.E.2 above.

The Standard Occupational Classification (SOC) code has compliance officers listed under code 13–1041. The Bureau believes that most of the skills required for preparation of the reports or records related to this proposal are the skills required for job functions performed in this occupation. However, the Bureau recognizes that under this general occupational code there is a high level of heterogeneity in the type of skills required as well as the corresponding labor costs incurred by the financial institutions performing these functions. During the SBREFA process, some SERs noted that, for instance, high-level corporate officers such as CEOs and senior vice presidents could be directly involved in some regulatory tasks. As such, the Bureau seeks comment regarding the skills required for the preparation of the records related to this proposed rule.

The Bureau acknowledges the possibility that certain aspects of the proposed rule may require some small entities to hire additional compliance staff. The Bureau has no evidence that such additional staff will possess a qualitatively different set of professional skills than small entity staff employed currently for compliance purposes. It is possible, however, that compliance with the proposed rule may emphasize certain skills. For example, new data points may increase demand for skills involved in researching questions, standard annual editing, and post-submission editing. Nevertheless, the Bureau believes that compliance would still involve the general set of skills identified above. The recordkeeping and reporting requirements associated with this proposal would also involve skills for information technology system development, integration, and maintenance. Financial institutions required to report data under HMDA often use data management systems called HMDA Management Systems (HMS) for existing regulatory purposes. A similar software for reporting the data required under the proposed rule could be developed by the institution internally or purchased from a third-party vendor. It is possible that other systems used by financial institutions, such as loan origination systems, might also need to be upgraded to capture new data fields required to be collected and reported under the proposed rule. The professional skills required for this one-time upgrade would be related to software development, testing, system engineering, information technology project management, budgeting and operation.

5. Identification, to the Extent Practicable, of All Relevant Federal Rules Which May Duplicate, Overlap, or Conflict With the Proposed Rule

The proposed rule contains requirements related to the collection and reporting of small business lending information by certain financial institutions and publication by the Bureau. In its SBREFA Outline, the Bureau identified certain other Federal statutes and regulations that relate in some fashion to these areas and has considered the extent to which they may duplicate, overlap, or conflict with this proposal.[946] The SBREFA Panel Report included an updated list of these Federal statutes and regulations, as informed by SER feedback.[947] Each of the statutes and regulations identified in the SBREFA Panel Report is discussed below.

ECOA, implemented by the Bureau's Regulation B (12 CFR part 1002), prohibits creditors from discriminating in any aspect of a credit transaction, including a business-purpose transaction, on the basis of race, color, religion, national origin, sex (including sexual orientation and gender identity), marital status, age (if the applicant is old enough to enter into a contract), receipt of income from any public assistance program, or the exercise in good faith of a right under the Consumer Credit Protection Act. The Bureau has certain oversight, enforcement, and supervisory authority over ECOA requirements and has rulemaking authority under the statute.

Regulation B generally prohibits creditors from inquiring about an applicant's race, color, religion, national origin, or sex (including sexual orientation and gender identity), with limited exceptions, including if it is required by law. Regulation B requires creditors to request information about the race, ethnicity, sex, marital status, and age of applicants for certain dwelling-secured loans and to retain that information for certain periods. Regulation B requires this data collection for credit primarily for the purchase or refinancing of a dwelling occupied or to be occupied by the applicant as a principal residence, where the extension of credit will be secured by the dwelling, and requires the data to be maintained by the creditor for 25 months for purposes of monitoring and enforcing compliance with ECOA/Regulation B and other laws. Section 1071 of the Dodd-Frank Act amended ECOA to require financial institutions to compile, maintain, and submit to the Bureau certain data on credit applications by women-owned, minority-owned, and small businesses.

The Small Business Act,[948] administered through the SBA, defines a small business concern as a business that is ''independently owned and operated and which is not dominant in its field of operation'' and empowers the Administrator to prescribe detailed size standards by which a business concern may be categorized as a small business. The SBA has adopted more than one thousand industry-specific size standards, classified by 6-digit NAICS codes, to determine whether a business concern is ''small.'' In addition, the Small Business Act authorizes loans for qualified small business concerns for purposes of plant acquisition, construction, conversion, or expansion, including the acquisition of land, material, supplies, equipment, and working capital. The SBA sets the guidelines that govern the ''7(a) loan program,'' determining which businesses financial institutions may lend to through the program and the type of loans they can provide. The Bureau's proposed rule would include reporting on SBA lending and guarantee programs.

The CRA, implemented through regulations issued by the OCC, the Board, and the FDIC, requires some institutions to collect, maintain, and report certain data about small business, farm, and consumer lending to ensure they are serving their communities. The purpose of the CRA is to encourage institutions to help meet the credit needs of the local communities in which they do business, including low- and moderate-income neighborhoods. The Bureau has been working with the CRA regulatory agencies to ensure that a 1071 rule and the CRA do not conflict and that 1071 data can be used as part of the CRA compliance process.

The Riegle Community Development and Regulatory Improvement Act of 1994[949] authorized the Community Development Financial Institution Fund (CDFI Fund). The Department of the Treasury administers the regulations that govern the CDFI Fund. A certified CDFI is a specialized financial institution that works in markets that are underserved by traditional financial institutions, including regulated institutions such as community

[946] Rules are duplicative or overlapping if they are based on the same or similar reasons for the regulation, the same or similar regulatory goals, and if they regulate the same classes of industry. Rules are conflicting when they impose two conflicting regulatory requirements on the same classes of industry.

[947] *See* SBREFA Panel Report at app. C.

[948] 15 U.S.C. 631 *et seq.*

[949] 12 U.S.C. 4701 *et seq.*

development banks and credit unions, and non-regulated institutions such as loan and venture capital funds. The CDFI program includes an annual mandatory Certification and Data Collection Report. The Bureau is proposing to require that financial institutions reporting 1071 data identify if they are CDFIs.

HMDA, implemented by the Bureau's Regulation C (12 CFR part 1003), requires lenders who meet certain coverage tests to collect, report, and disclose detailed information to their Federal supervisory agencies about mortgage applications and loans at the transaction level. The HMDA data are a valuable source for regulators, researchers, economists, industry, and advocates assessing housing needs, public investment, and possible discrimination as well as studying and analyzing trends in the mortgage market for a variety of purposes, including general market and economic monitoring. There may be some overlap between what is required to be reported under HMDA and what is proposed to be covered by section 1071 for certain credit applications secured by dwellings.

The Currency and Foreign Transactions Reporting Act,[950] as amended by the USA PATRIOT Act,[951] and commonly referred to as the Bank Secrecy Act, authorized the Financial Crimes Enforcement Network (FinCEN), a bureau of the Department of the Treasury, to combat money laundering and promote financial security. FinCEN regulations require covered financial institutions to establish and maintain written procedures that are reasonably designed to identify and verify beneficial owners of legal entity customers, which is sometimes called the customer due diligence (CDD) rule.

The Federal Credit Union Act, implemented by the NCUA (12 CFR part 1756), requires Federal credit unions to make financial reports as specified by the agency. The NCUA requires quarterly reports of the total number of outstanding loans, total outstanding loan balance, total number of loans granted or purchased year-to-date, total amount granted or purchased year-to-date for commercial loans to members, not including loans with original amounts less than $50,000. The NCUA also requires quarterly reports of the total number and total outstanding balance (including the guaranteed portion) of loans originated under an SBA loan program.

The Federal Deposit Insurance Act,[952] implemented by the FDIC (12 CFR part 304), requires insured banks and savings associations to file Call Reports in accordance with applicable instructions. These instructions require quarterly reports of loans to small businesses, defined as loans for commercial and industrial purposes to sole proprietorships, partnerships, corporations, and other business enterprises and loans secured by non-farm non-residential properties with original amounts of $1 million or less. In accordance with amendments by the Federal Deposit Insurance Corporation Improvement Act of 1991,[953] the instructions require quarterly reports of loans to small farms, defined as loans to finance agricultural production, other loans to farmers, and loans secured by farmland (including farm residential and other improvements) with original amounts of $500,000 or less. The Bureau intends to work with the FDIC to ensure that a 1071 rule and the Federal Deposit Insurance Act do not conflict.

The Bureau requests comment to identify any additional such Federal statutes or regulations that impose duplicative, overlapping, or conflicting requirements on financial institutions and potential changes to the proposed rules in light of duplicative, overlapping, or conflicting requirements.

6. Description of Any Significant Alternatives to the Proposed Rule Which Accomplish the Stated Objectives of Applicable Statutes and Minimize Any Significant Economic Impact of the Proposed Rule on Small Entities

In drafting this proposed rule, the Bureau considered multiple financial institution reporting thresholds. In particular, the Bureau considered whether to exempt financial institutions with fewer than 50 or 100 originations of covered credit transactions for small businesses in each of the two preceding calendar years, instead of 25 originations as proposed. The Bureau also considered whether to exempt depository institutions with assets under $100 million or $200 million from section 1071's data collection and reporting requirements. The Bureau understands that some burden reduction may result from a threshold higher than 25 loans. However, the Bureau is concerned that a higher threshold would result in the elimination of data that are important in fulfilling the purposes of section 1071. Therefore, the Bureau is proposing an originations threshold of at least 25 covered transactions in each of the previous two calendar years.

The following table shows the estimated impact that different reporting thresholds the Bureau considered would have had on financial institution coverage. For the purposes of considering the asset-based threshold alternatives, the Bureau estimates how institutional coverage and costs would be different if the Bureau required a 25-origination threshold in addition to an asset-based threshold for depository institutions. For the asset-based threshold alternatives, the Bureau assumes that the alternative proposal would have been that a depository institution would be required to report its small business lending activity for 2019 if it had more than 25 originations in both 2017 and 2018 and had assets over the asset-based threshold on December 31, 2018. The Bureau further assumes that if two institutions merged in 2019 then the resulting institution would be required to report if the sum of the separate institutions' assets on December 31, 2018 exceeded the asset-based threshold.

[950] Public Law 91–508, tit. II, 84 Stat. 1118 (1970).

[951] Public Law 107–56, 115 Stat. 272 (2001).

[952] 12 U.S.C. 1811 *et seq.*

[953] Public Law 102–242, 105 Stat. 2236 (1991).

**Table 18: Estimated impact of different reporting thresholds on the number and percentage of small depository institutions covered**

| Threshold considered | # of small depository institutions covered | % of small depository institutions covered |
|---|---|---|
| 25 originations | 4,000 – 4,200 | 38% – 40% |
| 50 originations | 2,900 – 3,100 | 28% – 29% |
| 100 originations | 1,800 – 2,000 | 17% – 19% |
| 25 originations AND $100 million in assets | 3,500 – 3,600 | 33% – 34% |
| 25 originations AND $200 million in assets | 2,600 – 2,700 | 25% – 25% |

Further, the Bureau is proposing a number of discretionary data points (*i.e.,* data points that are not expressly listed in section 1071 but that the Bureau is proposing to add pursuant to its authority under ECOA section 704B(e)(2)(H)) in this rule. The Bureau concluded that seven discretionary data points (application channel, application recipient, pricing, number of principal owners, NAICS code, number of workers, and time in business) would help the data collection fulfill the purposes of section 1071.

During the SBREFA process, SERs provided detailed feedback on the discretionary data points that the Bureau is considering.[954] One SER stated that the cost of collecting and reporting the discretionary data points under consideration would be significant, and another SER stated that the Bureau should include as few data points as possible to avoid unnecessary costs. Another SER stated that the Bureau should finalize a rule with just the statutorily required data points and avoid adding any discretionary data points. Other SERs favored or opposed the inclusion of some or all of the individual discretionary data points under consideration during the SBREFA process.

The Bureau understands that discretionary data points may introduce additional burden to small entities. However, the Bureau has preliminarily determined that these data points would aid in fulfilling the statutory purposes of section 1071—facilitating enforcement of fair lending laws and enabling communities, governmental entities, and creditors to identify business and community development needs and opportunities of women-owned, minority-owned, and small businesses. The Bureau seeks comment on the likely impact of the proposed rule on the compliance cost to small entities.

7. Discussion of Impact on Cost of Credit for Small Entities

Three types of costs (one-time, fixed ongoing, and variable ongoing) have the potential to influence the price and availability of credit to small businesses. In a competitive marketplace, standard microeconomics suggests that lenders will extend loans up to the point at which the value of granting an additional loan is equal to the additional cost associated with the financial institution providing the loan. One-time costs and fixed ongoing costs affect the overall profitability of a lender's loan portfolio but do not affect the profitability of extending an additional loan. Variable ongoing costs, however, affect the profitability of each additional loan and will influence the number of loans a lender provides. Based on the Bureau's available evidence, it expects that the variable ongoing costs to comply with the proposed rule will be passed on in full to small business credit applicants in the form of higher prices or fees to small businesses.

During the SBREFA process, the Bureau asked SERs how they would respond to the cost of complying with the proposals under consideration.[955] One nondepository SER did indicate that smaller firms in their industry may stop participating if one-time costs are too high, particularly if small business lending is a secondary aspect of their business model.[956] Another nondepository SER indicated that significantly increasing the time between application and decision could occur due to the proposed requirements, which they said would threaten their ability to compete with other lenders. When asked if they expected the costs of the eventual 1071 rule to be passed on in the form of higher rates and fees, a number of SERs (from banks, credit unions, and nondepositories) indicated that they expected to do so at their institutions. However, a number of other SERs indicated that they did not believe an eventual 1071 rule would result in higher rates or fees. Several depository institution SERs said that they would be able to absorb the costs in their operating budgets as they have with previous regulations.

In the One-Time Cost Survey, the Bureau asked respondents to rank a list of potential actions they may take in response to the compliance costs of implementing section 1071.[957] Respondents ranked the following list: ''Raise rates or fees on small business products''; ''Raise rates/fees on other credit products''; ''Accept lower profits''; ''Exit some geographic markets''; ''Tighten underwriting standards''; ''Offer fewer or less complex products''; ''No longer offer small business credit products''; or ''Other'' with two write-in options. Respondents ranked these options from ''1'' to ''9'' indicating their most to least likely responses. Respondents also had the opportunity to write in their own responses. Consistent with economic

[954] The SER feedback discussed herein can be found in the SBREFA Panel Report at 30–32.

[955] SBREFA Outline at 50.

[956] The SER feedback discussed in this section-by-section analysis can be found in the SBREFA Panel Report at 40.

[957] *See* One-Time Cost Survey at 11.

theory, respondents reported that they would be most likely to raise rates or fees on small business products and other credit products. On average, respondents reported that they would be least likely to exit some geographic markets or cease offering small business credit products. Accordingly, the Bureau expects the likely impact of an eventual 1071 rule on the cost of credit to small entities to be higher rates and fees because financial institutions pass on the variable ongoing costs of the required data collection. The Bureau estimates that $28, $24, and $7 in variable costs would be passed through per application to Type A, B, and C FIs, respectively. To put these values in context, the Bureau estimates that the per application net income is in a range of $53,000–$60,500; $25,000–$28,500; and $79,000–$89,000 for banks and savings associations of Types A, B, and C, respectively.

## IX. Paperwork Reduction Act

Under the Paperwork Reduction Act of 1995 (PRA),[958] Federal agencies are generally required to seek approval from the Office of Management and Budget (OMB) for information collection requirements prior to implementation. Under the PRA, the Bureau may not conduct nor sponsor, and, notwithstanding any other provision of law, a person is not required to respond to, an information collection unless the information collection displays a valid control number assigned by OMB.

As part of its continuing effort to reduce paperwork and respondent burden, the Bureau conducts a preclearance consultation program to provide the general public and Federal agencies with an opportunity to comment on the information collection requirements in accordance with the PRA. This helps ensure that the public understands the Bureau's requirements or instructions, respondents can provide the requested data in the desired format, reporting burden (time and financial resources) is minimized, information collection instruments are clearly understood, and the Bureau can properly assess the impact of information collection requirements on respondents.

The proposed rule would amend 12 CFR part 1002 (Regulation B), which implements the ECOA. The Bureau's OMB control number for Regulation B is 3170–0013. This proposed rule would revise the information collection requirements contained in Regulation B that OMB has approved under that OMB control number.

[958] 44 U.S.C. 3501 *et seq.*

Under the proposal, the Bureau would add four information collection requirements to Regulation B:

1. Compilation of reportable data (proposed § 1002.107), including a notice requirement (in proposed § 1002.107(a)(18) through (20)).
2. Reporting data to the Bureau (proposed § 1002.109).
3. Firewall notice requirement (proposed § 1002.108(d)).
4. Recordkeeping (proposed § 1002.111).

The information collection requirements in this proposed rule would be mandatory. Certain data fields would be modified or deleted by the Bureau, in its discretion, to advance a privacy interest before the 1071 data are made available to the public (as permitted by section 1071 and the Bureau's proposed rule). The data that are not modified or deleted would be made available to the public and are not considered confidential. The rest of the data would be considered confidential if the information:

- Identifies any natural persons who might not be applicants (*e.g.,* owners of a business where a legal entity is the applicant); or
- Implicates the privacy interests of financial institutions.

The collections of information contained in this proposed rule, and identified as such, have been submitted to OMB for review under section 3507(d) of the PRA. A complete description of the information collection requirements (including the burden estimate methods) is provided in the information collection request (ICR) that the Bureau has submitted to OMB under the requirements of the PRA. Please send your comments to the Office of Information and Regulatory Affairs, OMB, Attention: Desk Officer for the Bureau of Consumer Financial Protection. Send these comments by email to *oira_submission@omb.eop.gov* or by fax to 202–395–6974. If you wish to share your comments with the Bureau, please send a copy of these comments as described in the **ADDRESSES** section above. The ICR submitted to OMB requesting approval under the PRA for the information collection requirements contained herein is available at *www.regulations.gov* as well as on OMB's public-facing docket at *www.reginfo.gov*.

*Title of Collection:* Regulation B: Equal Credit Opportunity Act.

*OMB Control Number:* 3170–0013.

*Type of Review:* Revision of a currently approved collection.

*Affected Public:* Private Sector; Federal and State Governments.

*Estimated Number of Respondents:* 188,800.

*Estimated Total Annual Burden Hours:* 5,688,000.

Comments are invited on: (a) Whether the collection of information is necessary for the proper performance of the functions of the Bureau, including whether the information will have practical utility; (b) the accuracy of the Bureau's estimate of the burden of the collection of information, including the validity of the methods and the assumptions used; (c) ways to enhance the quality, utility, and clarity of the information to be collected; and (d) ways to minimize the burden of the collection of information on respondents, including through the use of automated collection techniques or other forms of information technology. Comments submitted in response to this proposal will be summarized and/or included in the request for OMB approval. All comments will become a matter of public record.

If applicable, the notice of final rule will display the control number assigned by OMB to any information collection requirements proposed herein and adopted in the final rule.

### List of Subjects in 12 CFR Part 1002

Banks, Banking, Civil rights, Consumer protection, Credit, Credit unions, Marital status discrimination, National banks, Penalties.

### Authority and Issuance

For the reasons set forth in the preamble, the Bureau proposes to amend Regulation B, 12 CFR part 1002, as set forth below:

## PART 1002—EQUAL CREDIT OPPORTUNITY ACT (REGULATION B)

■ 1. The authority citation for part 1002 is revised to read as follows:

**Authority:** 12 U.S.C. 5512, 5581; 15 U.S.C. 1691b. Subpart B is also issued under 15 U.S.C. 1691c–2.

## Subpart A—General

■ 2. Sections 1002.1 through 1002.16 are designated as subpart A under the heading set forth above.

■ 3. Section 1002.5 is amended by revising paragraph (a)(4) introductory text and adding paragraphs (a)(4)(vii) through (ix) to read as follows:

### § 1002.5 Rules concerning requests for information.

(a) *General rules*—

* * * * *

(4) *Other permissible collection of information.* Notwithstanding paragraph (b) of this section, a creditor may collect

information under the following circumstances provided that the creditor collects the information in compliance with appendices F and G to this part, or appendix B to 12 CFR part 1003, as applicable:

* * * * *

(vii) A creditor that was required to report small business lending data pursuant to § 1002.109 for any of the preceding five calendar years but is not currently a covered financial institution under § 1002.105(b) may collect information pursuant to subpart B of this part for a covered application as defined in § 1002.103 regarding whether the applicant is a minority-owned business or a women-owned business, and the ethnicity, race, and sex of the applicant's principal owners if it complies with the requirements of subpart B as otherwise required for covered financial institutions pursuant to §§ 1002.107, 1002.108, 1002.111, 1002.112, and 1002.114 for that application.

(viii) A creditor that exceeded the loan-volume threshold in the first year of the two-year threshold period provided in § 1002.105(b) may, in the second year, collect information pursuant to subpart B of this part for a covered application as defined in § 1002.103 regarding whether the applicant is a minority-owned business or a women-owned business, and the ethnicity, race, and sex of the applicant's principal owners if it complies with the requirements of subpart B as otherwise required for covered financial institutions pursuant to §§ 1002.107, 1002.108, 1002.111, 1002.112, and 1002.114 for that application.

(ix) A creditor that is not currently a covered financial institution under § 1002.105(b), and is not otherwise a creditor to which § 1002.5(a)(4)(vii) or (viii) applies, may collect information pursuant to subpart B of this part for a covered application as defined in § 1002.103 regarding whether an applicant for a covered credit transaction is a minority-owned business or a women-owned business, and the ethnicity, race, and sex of the applicant's principal owners for a transaction if it complies with the requirements of subpart B as otherwise required for covered financial institutions pursuant to §§ 1002.107 through 1002.112 and 1002.114 for that application.

* * * * *

■ 4. Subpart B is added to read as follows:

## Subpart B—Small Business Lending Data Collection

§ 1002.101 Authority, purpose, and scope.
§ 1002.102 Definitions.
§ 1002.103 Covered applications.
§ 1002.104 Covered credit transactions and excluded transactions.
§ 1002.105 Covered financial institutions and exempt institutions.
§ 1002.106 Business and small business.
§ 1002.107 Compilation of reportable data.
§ 1002.108 Firewall.
§ 1002.109 Reporting of data to the Bureau.
§ 1002.110 Publication of data.
§ 1002.111 Recordkeeping.
§ 1002.112 Enforcement.
§ 1002.113 Severability.
§ 1002.114 Effective date, compliance date, and special transitional rules.

### § 1002.101 Authority, purpose, and scope.

(a) *Authority and scope.* This subpart to Regulation B is issued by the Bureau pursuant to section 704B of the Equal Credit Opportunity Act (15 U.S.C. 1691c–2). Except as otherwise provided herein, this subpart Applies to covered financial institutions, as defined in § 1002.105(b), other than a person excluded from coverage of this part by section 1029 of the Consumer Financial Protection Act of 2010, title X of the Dodd-Frank Wall Street Reform and Consumer Protection Act, Public Law 111–203, 124 Stat. 1376, 2004 (2010).

(b) *Purpose.* This subpart implements section 704B of the Equal Credit Opportunity Act, which is intended:

(i) To facilitate enforcement of fair lending laws; and

(ii) To enable communities, governmental entities, and creditors to identify business and community development needs and opportunities of women-owned, minority-owned, and small businesses.

### § 1002.102 Definitions.

In this subpart:

(a) *Affiliate* means, with respect to a financial institution, any company that controls, is controlled by, or is under common control with, another company, as set forth in the Bank Holding Company Act of 1956 (12 U.S.C. 1841 *et seq.*). With respect to a business or an applicant, *affiliate* shall have the same meaning as in 13 CFR 121.103.

(b) *Applicant* means any person who requests or who has received an extension of business credit from a financial institution.

(c) *Business* is defined in § 1002.106(a).

(d) *Business credit* shall have the same meaning as in § 1002.2(g).

(e) *Closed-end credit transaction* means an extension of credit that is not an open-end credit transaction under paragraph (n) of this section.

(f) *Covered application* is defined in § 1002.103.

(g) *Covered credit transaction* is defined in § 1002.104.

(h) *Covered financial institution* is defined in § 1002.105(b).

(i) *Credit* shall have the same meaning as in § 1002.2(j).

(j) *Dwelling* shall have the same meaning as in Regulation C, 12 CFR 1003.2(f).

(k) *Financial institution* is defined in § 1002.105(a).

(*l*) *Minority individual* means a natural person who is American Indian or Alaska Native, Asian, Black or African American, Native Hawaiian or Other Pacific Islander, and/or Hispanic or Latino.

(m) *Minority-owned business* means a business for which more than 50 percent of its ownership or control is held by one or more minority individuals, and more than 50 percent of its net profits or losses accrue to one or more minority individuals.

(n) *Open-end credit transaction* means an open-end credit plan as defined in Regulation Z, 12 CFR 1026.2(a)(20), but without regard to whether the credit is consumer credit, as defined in § 1026.2(a)(12), is extended by a creditor, as defined in § 1026.2(a)(17), or is extended to a consumer, as defined in § 1026.2(a)(11).

(o) *Principal owner* means a natural person who directly owns 25 percent or more of the equity interests of a business.

(p) *Small business* is defined in § 1002.106(b).

(q) *Small business lending application register* or *register* means the data reported, or required to be reported, annually pursuant to § 1002.109.

(r) *State* shall have the same meaning as in § 1002.2(aa).

(s) *Women-owned business* means a business for which more than 50 percent of its ownership or control is held by one or more women, and more than 50 percent of its net profits or losses accrue to one or more women.

### § 1002.103 Covered applications.

(a) *Covered application.* Except as provided in paragraph (b) of this section, covered application means an oral or written request for a covered credit transaction that is made in accordance with procedures used by a financial institution for the type of credit requested.

(b) *Circumstances that are not covered applications.* A covered application does not include:

(1) Reevaluation, extension, or renewal requests on an existing business credit account, unless the request seeks additional credit amounts.

(2) Inquiries and prequalification requests.

**§ 1002.104 Covered credit transactions and excluded transactions.**

(a) *Covered credit transaction* means an extension of business credit that is not an excluded transaction under paragraph (b) of this section.

(b) *Excluded transactions.* The requirements of this subpart do not apply to:

(1) *Trade credit.* A financing arrangement wherein a business acquires goods or services from another business without making immediate payment to the business providing the goods or services.

(2) *Public utilities credit.* Public utilities credit as defined in § 1002.3(a)(1).

(3) *Securities credit.* Securities credit as defined in § 1002.3(b)(1).

(4) *Incidental credit.* Incidental credit as defined in § 1002.3(c)(1), but without regard to whether the credit is consumer credit, as defined in § 1002.2(h).

**§ 1002.105 Covered financial institutions and exempt institutions.**

(a) *Financial institution* means any partnership, company, corporation, association (incorporated or unincorporated), trust, estate, cooperative organization, or other entity that engages in any financial activity.

(b) *Covered financial institution* means a financial institution that originated at least 25 covered credit transactions for small businesses in each of the two preceding calendar years. For purposes of this definition, if more than one financial institution was involved in the origination of a covered credit transaction, only the financial institution that made the credit decision approving the application shall count the origination for purposes of this paragraph (b).

**§ 1002.106 Business and small business.**

(a) *Business* has the same meaning as the term ''business concern or concern'' in 13 CFR 121.105.

(b) *Small business* has the same meaning as the term ''small business concern'' in 15 U.S.C. 632(a), as implemented in 13 CFR 121.101 through 121.107. Notwithstanding the size standards set forth in 13 CFR 121.201, for purposes of this subpart, a business is a small business if and only if its gross annual revenue, as defined in § 1002.107(a)(14), for its preceding fiscal year is $5 million or less.

**§ 1002.107 Compilation of reportable data.**

(a) *Data format and itemization.* A covered financial institution shall compile and maintain data regarding covered applications from small businesses. The data shall be compiled in the manner prescribed below and as explained in associated Official Interpretations and the Filing Instructions Guide for this subpart for the appropriate year. The data compiled shall include the items described in paragraphs (a)(1) through (21) of this section.

(1) *Unique identifier.* An alphanumeric identifier, starting with the legal entity identifier of the financial institution, unique within the financial institution to the specific covered application, and which can be used to identify and retrieve the specific file or files corresponding to the application for or extension of credit.

(2) *Application date.* The date the covered application was received by the financial institution or the date shown on a paper or electronic application form.

(3) *Application method.* The means by which the applicant submitted the covered application directly or indirectly to the financial institution.

(4) *Application recipient.* Whether the applicant submitted the covered application directly to the financial institution or its affiliate, or whether the applicant submitted the covered application indirectly to the financial institution via a third party.

(5) *Credit type.* The following information regarding the type of credit applied for or originated:

(i) *Credit product.* The credit product.

(ii) *Guarantees.* The type or types of guarantees that were obtained for an extension of credit, or that would have been obtained if the covered credit transaction were originated.

(iii) *Loan term.* The length of the loan term, in months, if applicable.

(6) *Credit purpose.* The purpose or purposes of the credit applied for or originated.

(7) *Amount applied for.* The initial amount of credit or the initial credit limit requested by the applicant.

(8) *Amount approved or originated.* (i) For an application for a closed-end credit transaction that is approved but not accepted, the amount approved by the financial institution; or

(ii) For a closed-end credit transaction that is originated, the amount of credit originated; or

(iii) For an application for an open-end credit transaction that is originated or approved but not accepted, the amount of the credit limit approved.

(9) *Action taken.* The action taken by the financial institution on the covered application, reported as originated, approved but not accepted, denied, withdrawn by the applicant, or incomplete.

(10) *Action taken date.* The date of the action taken by the financial institution.

(11) *Denial reasons.* For denied applications, the principal reason or reasons the financial institution denied the covered application.

(12) *Pricing information.* The following information regarding the pricing of a covered credit transaction that is originated or approved but not accepted, as applicable:

(i) *Interest rate.* (A) If the interest rate is fixed, the interest rate that is or would be applicable to the covered credit transaction; or

(B) If the interest rate is adjustable, the margin, index value, and index name that is or would be applicable to the covered credit transaction at origination;

(ii) *Total origination charges.* The total amount of all charges payable directly or indirectly by the applicant and imposed directly or indirectly by the financial institution at or before origination as an incident to or a condition of the extension of credit, expressed in dollars;

(iii) *Broker fees.* The total amount of all charges included in paragraph (a)(12)(ii) of this section that are fees paid by the applicant directly to a broker or to the financial institution for delivery to a broker, expressed in dollars;

(iv) *Initial annual charges.* The total amount of all non-interest charges that are scheduled to be imposed over the first annual period of the covered credit transaction, expressed in dollars;

(v) *Additional cost for merchant cash advances or other sales-based financing.* For a merchant cash advance or other sales-based financing transaction, the difference between the amount advanced and the amount to be repaid, expressed in dollars; and

(vi) *Prepayment penalties.* (A) Notwithstanding whether such a provision was in fact included, whether the financial institution could have included a charge to be imposed for paying all or part of the transaction's principal before the date on which the principal is due under the policies and procedures applicable to the covered credit transaction; and

(B) Notwithstanding the response to paragraph (a)(20)(iv)(A) of this section, whether the terms of the covered credit transaction do in fact include a charge imposed for paying all or part of the transaction's principal before the date on which the principal is due.

(13) *Census tract.* The census tract in which is located:

(i) The address or location where the proceeds of the credit applied for or originated will be or would have been principally applied; or

(ii) If the information in paragraph (a)(13)(i) of this section is unknown, the address or location of the main office or headquarters of the applicant; or

(iii) If the information in both paragraphs (a)(13)(i) and (ii) of this section is unknown, another address or location associated with the applicant.

(iv) The financial institution shall also indicate which one of the three types of addresses or locations listed in paragraphs (a)(13)(i), (ii), or (iii) of this section the census tract is based on.

(14) *Gross annual revenue.* The gross annual revenue of the applicant for its preceding full fiscal year prior to when the information is collected.

(15) *NAICS code.* A 6-digit North American Industry Classification System (NAICS) code appropriate for the applicant.

(16) *Number of workers.* The number of non-owners working for the applicant.

(17) *Time in business.* The time the applicant has been in business, described in whole years, as relied on or collected by the financial institution.

(18) *Minority-owned business status.* Whether the applicant is a minority-owned business and whether minority-owned business status is being reported based on previously collected data pursuant to § 1002.107(c)(2). The financial institution shall collect and report minority-owned business status as prescribed in appendix F to this part. When requesting minority-owned business status from an applicant, the financial institution shall inform the applicant that the financial institution cannot discriminate on the basis of minority-owned business status, or on whether the applicant provides this information.

(19) *Women-owned business status.* Whether the applicant is a women-owned business and whether women-owned business status is being reported based on previously collected data pursuant to § 1002.107(c)(2). The financial institution shall collect and report women-owned business status as prescribed in appendix F to this part. When requesting women-owned business status from an applicant, the financial institution shall inform the applicant that the financial institution cannot discriminate on the basis of women-owned business status, or on whether the applicant provides this information.

(20) *Ethnicity, race, and sex of principal owners.* The ethnicity, race, and sex of the applicant's principal owners and whether ethnicity, race, and sex are being reported based on previously collected data pursuant to § 1002.107(c)(2). The data compiled for purposes of this paragraph (a)(20) shall also include whether ethnicity and race are being reported based on visual observation or surname. The financial institution shall collect and report principal owners' ethnicity, race, and sex information as prescribed in appendix G to this part. When requesting ethnicity, race, and sex information from an applicant, the financial institution shall inform the applicant that the financial institution cannot discriminate on the basis of a principal owner's ethnicity, race, or sex, or on whether the applicant provides this information.

(21) *Number of principal owners.* The number of the applicant's principal owners.

(b) *Verification of applicant-provided information.* Unless otherwise provided in this subpart, the financial institution may rely on statements of the applicant when compiling data unless it verifies the information provided, in which case it shall use the verified information.

(c) *Time and manner of collection*—(1) *In general.* A covered financial institution shall maintain procedures to collect applicant-provided data under paragraph (a) of this section at a time and in a manner that is reasonably designed to obtain a response.

(2) *Previously collected data.* A covered financial institution is permitted, but not required, to reuse previously collected data to satisfy paragraphs (a)(13) through (21) of this section if:

(i) The data were collected within the same calendar year as the current covered application; and

(ii) The financial institution has no reason to believe the data are inaccurate.

**§ 1002.108 Firewall.**

(a) *Definitions.* For purposes of this section, the following terms shall have the following meanings:

(1) *Involved in making any determination concerning a covered application* means participating in a decision regarding the evaluation of a covered application, including the creditworthiness of an applicant for a covered credit transaction.

(2) *Should have access* means that an employee or officer may need to collect, see, consider, refer to, or otherwise use the information to perform that employee's or officer's assigned job duties.

(b) *Prohibition on access to certain information.* Unless the exception under paragraph (c) of this section applies, an employee or officer of a covered financial institution or a covered financial institution's affiliate shall not have access to an applicant's responses to inquiries that the financial institution makes pursuant to this subpart regarding whether the applicant is a minority-owned business under § 1002.107(a)(18) or a women-owned business under § 1002.107(a)(19), and regarding the ethnicity, race, and sex of the applicant's principal owners under § 1002.107(a)(20), if that employee or officer is involved in making any determination concerning that applicant's covered application.

(c) *Exception to the prohibition on access to certain information.* The prohibition in paragraph (b) of this section shall not apply to an employee or officer if the financial institution determines that it is not feasible to limit that employee's or officer's access to an applicant's responses to the financial institution's inquiries under § 1002.107(a)(18) through (20) and the financial institution provides the notice required under paragraph (d) of this section to the applicant. It is not feasible to limit access as required pursuant to paragraph (b) of this section if the financial institution determines that an employee or officer involved in making any determination concerning a covered application should have access to one or more applicants' responses to the financial institution's inquiries under § 1002.107(a)(18) through (20).

(d) *Notice.* In order to satisfy the exception set forth in paragraph (c) of this section, a financial institution shall provide a notice to each applicant whose responses will be accessed, informing the applicant that one or more employees or officers involved in making determinations concerning the covered application may have access to the applicant's responses to the financial institution's inquiries regarding whether the applicant is a minority-owned business or a women-owned business, and regarding the ethnicity, race, and sex of the applicant's principal owners. The financial institution shall provide the notice required by this paragraph (d) when making the inquiries required under § 1002.107(a)(18) through (20) and together with the notices required pursuant to § 1002.107(a)(18) through (20).

**§ 1002.109 Reporting of data to the Bureau.**

(a) *Reporting to the Bureau*—(1) *Annual reporting.* (i) On or before June 1 following the calendar year for which data are compiled and maintained as required by § 1002.107, a covered

financial institution shall submit its small business lending application register in the format prescribed by the Bureau.

(ii) An authorized representative of the covered financial institution with knowledge of the data shall certify to the accuracy and completeness of the data reported pursuant to this paragraph (a).

(iii) When the last day for submission of data prescribed under paragraph (a)(1) falls on a date that is not a business day, a submission shall be considered timely if it is submitted no later than the next business day.

(2) *Reporting by subsidiaries.* A covered financial institution that is a subsidiary of another covered financial institution shall complete a separate small business lending application register. The subsidiary shall submit its small business lending application register, directly or through its parent, to the Bureau.

(3) *Reporting obligations where multiple financial institutions are involved in a covered credit transaction.* If a covered application results in an origination, only one covered financial institution shall report the covered credit transaction. If more than one financial institution is involved in the origination of a covered credit transaction, the financial institution that makes the final credit decision approving the application shall report the loan as an origination (if that financial institution is a covered financial institution). If there was no origination, then any covered financial institution that made a credit decision shall report the application.

(b) *Financial institution identifying information.* A financial institution shall provide each of the following with its submission:

(1) Its name.

(2) Its headquarters address.

(3) The name and business contact information of a person who may be contacted with questions about the financial institution's submission.

(4) Its Federal prudential regulator, if applicable.

(5) Its Federal Taxpayer Identification Number (TIN).

(6) Its Legal Entity Identifier (LEI).

(7) Its Research, Statistics, Supervision, and Discount identification (RSSD ID) number, if applicable.

(8) Parent entity information, if applicable, including:

(i) The name of the immediate parent entity;

(ii) The LEI of the immediate parent entity, if available;

(iii) The RSSD ID number of the immediate parent entity, if available;

(iv) The name of the top-holding parent entity;

(v) The LEI of the top-holding parent entity, if available; and

(vi) The RSSD ID number of the top-holding parent entity, if available.

(9) The type of financial institution that it is, indicated by selecting the appropriate type or types of institution from the list provided.

(10) Whether the financial institution is voluntarily reporting covered applications for covered credit transactions.

(c) *Procedures for the submission of data to the Bureau.* The Bureau shall make available a *Filing Instructions Guide,* containing technical instructions for the submission of data to the Bureau pursuant to this section, as well as any related materials, available at [a designated Bureau website].

**§ 1002.110 Publication of data.**

(a) *Publication of small business lending application registers and associated financial institution information.* The Bureau shall make available to the public generally the data reported to it by financial institutions pursuant to § 1002.109, subject to deletions or modifications made by the Bureau, at its discretion, if the Bureau determines that the deletion or modification of the data would advance a privacy interest. The Bureau shall make such data available on an annual basis, by publishing it on the Bureau's website at [a designated Bureau website].

(b) *Publication of aggregate data.* The Bureau may, at its discretion, compile and aggregate data submitted by financial institutions pursuant to § 1002.109, and make any compilations or aggregations of such data publicly available as the Bureau deems appropriate.

(c) *Statement of financial institution's small business lending data available on the Bureau's website.* A covered financial institution shall make available to the public on its website, or otherwise upon request, a statement that the covered financial institution's small business lending application register, as modified by the Bureau pursuant to § 1002.110(a), is or will be available on the Bureau's website at [a designated Bureau website]. A financial institution shall use language provided by the Bureau, or substantially similar language, to satisfy the requirement to provide a statement pursuant to this paragraph (c).

(d) *Availability of statements.* A covered financial institution shall make the notice required by paragraph (c) of this section available to the public on its website when it submits a small business lending application register to the Bureau pursuant to § 1002.109(a)(1), and shall maintain the notice for as long as it has an obligation to retain its small business lending application registers pursuant to § 1002.111(a).

**§ 1002.111 Recordkeeping.**

(a) *Record retention.* A covered financial institution shall retain evidence of compliance with this subpart, which includes a copy of its small business lending application register, for at least three years after the register is required to be submitted to the Bureau pursuant to § 1002.109.

(b) *Certain information kept separate from the rest of the application.* A financial institution shall maintain, separately from the rest of the application and accompanying information, an applicant's responses to the financial institution's inquiries pursuant to this subpart regarding whether an applicant for a covered credit transaction is a minority-owned business under § 1002.107(18) or a women-owned business under § 1002.107(19), and regarding the ethnicity, race, and sex of the applicant's principal owners under § 1002.107(20).

(c) *Limitation on personally identifiable information in records retained under this section.* In compiling and maintaining any records under § 1002.107 or paragraph (b) of this section, or reporting data pursuant to § 1002.109, a financial institution shall not include any name, specific address, telephone number, email address, or any personally identifiable information concerning any individual who is, or is connected with, an applicant, other than as required pursuant to § 1002.107 or paragraph (b) of this section.

**§ 1002.112 Enforcement.**

(a) *Administrative enforcement and civil liability.* A violation of section 704B of the Act or this subpart is subject to administrative sanctions and civil liability as provided in sections 704 (15 U.S.C. 1691c) and 706 (15 U.S.C. 1691e) of the Act, where applicable.

(b) *Bona fide errors.* A bona fide error in compiling, maintaining, or reporting data with respect to a covered application is one that was unintentional and occurred despite the maintenance of procedures reasonably adapted to avoid such an error. A bona fide error is not a violation of the Act or this subpart. A financial institution is presumed to maintain procedures reasonably adapted to avoid such errors with respect to a given data field if the number of errors found in a random

sample of the financial institution's submission for the data field does not equal or exceed a threshold specified by the Bureau for this purpose in appendix H to this part. However, an error is not a bona fide error if either there is a reasonable basis to believe the error was intentional or there is other evidence that the financial institution does not or has not maintained procedures reasonably adapted to avoid such errors.

(c) *Safe harbors.* (1) *Incorrect entry for census tract.* An incorrect entry for census tract is not a violation of the Act or this subpart if the financial institution obtained the census tract by correctly using a geocoding tool provided by the FFIEC or the Bureau.

(2) *Incorrect entry for NAICS code.* If a financial institution identifies the NAICS code for an applicant itself, without the applicant or another source providing the NAICS code, and the identified NAICS code is incorrect, the incorrect entry for the NAICS code is not a violation of the Act or this subpart provided that the first two digits of the NAICS code are correct and the financial institution maintains procedures reasonably adapted to correctly identify the subsequent four digits.

(3) *Incorrect determination of small business status.* A financial institution that initially determines that an applicant for a covered credit transaction is a small business, as defined in § 1002.106(b), but later concludes the applicant is not a small business, does not violate the Act or this regulation if the financial institution collected information pursuant to this subpart regarding whether an applicant for a covered credit transaction is a minority-owned business or a women-owned business, and the ethnicity, race, and sex of the applicant's principal owners. A financial institution seeking to avail itself of this safe harbor shall comply with the requirements of this subpart As otherwise required pursuant to §§ 1002.107, 1002.108, and 1002.111 with respect to the collected information.

(4) *Incorrect application date.* A financial institution does not violate the Act or this subpart if it reports on its small business lending application register an application date that is within three calendar days of the actual application date pursuant to § 1002.107(a)(2).

**§ 1002.113 Severability.**

The provisions of this subpart are separate and severable from one another. If any provision is stayed or determined to be invalid, the remaining provisions shall continue in effect.

**§ 1002.114 Effective date, compliance date, and special transitional rules.**

(a) *Effective date.* The effective date for this subpart is [90 days after the date of publication of the final rule in the **Federal Register**].

(b) *Compliance date.* The compliance date for this subpart is [approximately 18 months after the date of publication of the final rule in the **Federal Register**].

(c) *Special transitional rules*—(1) *Collection of information prior to the compliance date.* A financial institution that will be a covered financial institution as of the compliance date in paragraph (b) of this section is permitted, but not required, to collect information regarding whether an applicant for a covered credit transaction is a minority-owned business under § 1002.107(a)(18), a women-owned business under § 1002.107(a)(19), and the ethnicity, race, and sex of the applicant's principal owners under § 1002.107(a)(20) beginning [12 months prior to the compliance date]. A financial institution collecting such information pursuant to this paragraph (c)(1) must do so in accordance with the requirements set out in §§ 1002.107(18) through (20) and 1002.108.

(2) *Determining whether a financial institution is a covered financial institution for purposes of this subpart.* For purposes of determining whether a financial institution is a covered financial institution under § 1002.105(b) as of the compliance date specified in paragraph (b) of this section, a financial institution is permitted, but not required, to use its to use its originations of covered credit transactions for small businesses in the second and third preceding calendar years (rather than its originations in the two immediately preceding calendar years).

■ 5. Appendices E through H are added to read as follows:

## Appendix E to Part 1002—Sample Form for Collecting Certain Applicant-Provided Data under Subpart B

BILLING CODE 4810–25–P

# Sample data collection form

Federal law requires that we ask if a small business applicant is a minority-owned business or a women-owned business. Federal law also requires us to ask small business applicants for their principal owners' ethnicity, race, and sex.

Applicants are not required to provide this information, but are encouraged to do so. We collect this information to help ensure that all small business applicants are treated fairly and that communities' small business credit needs are being fulfilled.

Employees and officers making determinations concerning an application, such as loan officers and underwriters, may have access to the information provided on this form. However, we cannot discriminate on the basis of minority-owned business status, women-owned business status, or a principal owner's ethnicity, race, or sex. Additionally, we cannot discriminate on the basis of whether an applicant provides this information.

## Minority-owned business status

For purposes of this form, an applicant is a minority-owned business if one or more minority individuals (i) directly or indirectly own or control more than 50 percent of the business and (ii) receive more than 50 percent of the net profits of the business.

A minority individual is a natural person who is Hispanic or Latino, American Indian or Alaska Native, Asian, Black or African American, or Native Hawaiian or Other Pacific Islander. A multi-racial or multi-ethnic individual is a minority individual for this purpose.

### Is the applicant a minority-owned business?

☐ Yes

☐ No

☐ I do not wish to provide this information

## Women-owned business status

For purposes of this form, an applicant is a women-owned business if one or more women (i) directly or indirectly own or control more than 50 percent of the business and (ii) receive more than 50 percent of the net profits of the business.

### Is the applicant a women-owned business?

☐ Yes

☐ No

☐ I do not wish to provide this information

## Number of principal owners

For purposes of this form, a principal owner is any natural person who owns 25 percent or more of the equity interest of a business. An applicant might not have any principal owners if, for example, it is not directly owned by any natural persons (i.e., if it is owned by another entity or entities) or if no natural person directly owns at least 25 percent of the business.

### How many principal owners does the applicant have? _____

## Demographic information about principal owners

Applicants are not required to provide this information but are encouraged to do so. We cannot discriminate on the basis of a principal owner's ethnicity, race, or sex. Additionally, we cannot discriminate on the basis of whether an applicant provides this information.

If a small business applicant does not provide ethnicity, race, or sex information for at least one of its principal owners and we meet with a principal owner in person or via electronic media with an enabled video component, Federal law requires us to report at least one principal owner's ethnicity and race based on visual observation and/or surname.

**Please fill out one sheet for each principal owner.**

### Ethnicity *(Check one or more)*

- ☐ **Hispanic or Latino**
  - ☐ Cuban
  - ☐ Mexican
  - ☐ Puerto Rican
  - ☐ Other Hispanic or Latino *(Print origin, for example, Argentinean, Colombian, Dominican, Nicaraguan, Salvadoran, Spaniard, and so on)*:
- ☐ **Not Hispanic or Latino**
- ☐ I do not wish to provide this information

### Sex *(Check one or more)*

- ☐ **Female**
- ☐ **Male**
- ☐ **I prefer to self-identify as:**
- ☐ I do not wish to provide this information

### Race *(Check one or more)*

- ☐ **American Indian or Alaska Native** *(Print name of enrolled or principal tribe)*:
- ☐ **Asian**
  - ☐ Asian Indian
  - ☐ Chinese
  - ☐ Filipino
  - ☐ Japanese
  - ☐ Korean
  - ☐ Vietnamese
  - ☐ Other Asian *(Print race, for example, Cambodian, Hmong, Laotian, Pakistani, Thai, and so on)*:
- ☐ **Black or African American**
  - ☐ African American
  - ☐ Ethiopian
  - ☐ Haitian
  - ☐ Jamaican
  - ☐ Nigerian
  - ☐ Somali
  - ☐ Other Black or African American *(Print race, for example, Barbadian, Ghanaian, South African, and so on)*:
- ☐ **Native Hawaiian or Other Pacific Islander**
  - ☐ Guamanian or Chamorro
  - ☐ Native Hawaiian
  - ☐ Samoan
  - ☐ Other Pacific Islander *(Print race, for example, Fijian, Tongan, and so on)*:
- ☐ **White**
- ☐ I do not wish to provide this information

BILLING CODE 4825–25–C

## Appendix F to Part 1002—Instructions for Collecting and Reporting Small Business Applicants' Minority-Owned Business Status and Women-Owned Business Status Under Subpart B

Covered financial institutions are required by subpart B of this part to collect certain information from small business applicants about covered applications, including whether the applicant is a minority-owned business or a women-owned business. This appendix provides instructions for collecting that information.

1. Unless a financial institution is reporting based on previously collected data as discussed in Instruction 11, the financial institution must ask the applicant about its minority-owned business status and women-owned business status for each of the applicant's covered applications. However, the financial institution cannot require an applicant to provide this information.

2. Generally, a financial institution must ask the applicant whether it is a minority-owned business and whether it is a women-owned business on a paper or electronic data collection form that is separate from the application form and other documents used to collect other information related to the application. See the sample data collection form in appendix E for sample language. For a covered application taken solely by telephone or another medium that does not involve providing any paper or electronic documents, the financial institution must ask the applicant about its minority-owned business status and women-owned business status orally if the financial institution is not reporting based on previously collected data. The financial institution may combine these business status questions with questions regarding principal owners' ethnicity, race, and sex pursuant to § 1002.107(a)(20) and a question about the applicant's number of principal owners pursuant to § 1002.107(a)(21). See the sample data collection form in appendix E.

3. When asking the questions regarding minority-owned business status and women-owned business status (regardless of whether they are asked on a paper form, electronically, or orally), the financial institution also must provide the applicant with definitions of the terms ''minority individual,'' ''minority-owned business,'' and ''women-owned business'' as set forth in § 1002.102(*l*), (m), and (s). The financial institution satisfies this requirement if it provides the definitions of minority individual, minority-owned business, and women-owned business set forth in the sample data collection form in appendix E.

4. A financial institution may inform the applicant that Federal law requires it to ask for an applicant's minority-owned business status and women-owned business status to help ensure that all small business applicants for credit are treated fairly and that communities' small business credit needs are being fulfilled. The financial institution must inform the applicant that it is not required to respond to the financial institution's questions regarding the applicant's minority-owned business status and women-owned business status. The financial institution also must inform the applicant that the financial institution cannot discriminate on the basis of minority-owned business status or women-owned business status, or on the basis of whether the applicant provides this information.

5. A financial institution must report the answers to the minority-owned business status and women-owned business status questions that the applicant provided on the paper or electronic data collection form the financial institution uses to satisfy the requirements of § 1002.107(a)(18) and (19) without regard to any answers provided for other purposes. If the financial institution asks the minority-owned business status and women-owned business status questions orally, the financial institution must report the answers the applicant provided in response to the inquiries the financial institution makes to satisfy the requirements of § 1002.107(a)(18) and (19) without regard to any answers provided for other purposes. For example, if a financial institution uses a paper data collection form to ask an applicant if it is a minority-owned business or women-owned business for purposes of § 1002.107(a)(18) and (19) and the applicant responds that it is not a minority-owned business or a women-owned business, the financial institution must report that the applicant is not a minority-owned business or a women-owned business, even if the applicant indicates that it is a minority-owned business for other purposes, such as for a special purpose credit program or a Small Business Administration program.

6. A financial institution is neither required nor permitted to verify the minority-owned business status or women-owned business status that the applicant provides.

7. If the applicant declines to provide information on the applicant's minority-owned business status or women-owned business status (such as by checking only the ''I do not wish to provide this information'' box on a paper or electronic data collection form or stating orally that it does not wish to provide this information), the financial institution must report that the applicant declined to provide information on the applicant's minority-owned business status or women-owned business status, as applicable.

8. If the applicant does not respond to the financial institution's inquiry regarding its minority-owned business status (such as by leaving the response blank or failing to submit a data collection form), the financial institution must report that the information was not provided by the applicant. Similarly, if the applicant does not respond to the financial institution's inquiry regarding its women-owned business status, the financial institution must report that the information was not provided by the applicant.

9. If the applicant both provides a substantive response to a question requesting business status (that is, checks either ''yes'' or ''no'') and also checks the ''I do not wish to provide this information'' box for that question, the financial institution reports the minority-owned business status or women-owned business status provided by the applicant (rather than reporting that the applicant declined to provide the information).

10. A financial institution does not report minority-owned business status or women-owned business status based on visual observation, surname, or any basis other than the applicant's responses to the inquiries that the financial institution makes to satisfy § 1002.107(a)(18) and (19) or, as discussed in Instruction 11, on the basis of the applicant's responses to the inquiries that the financial institution previously made to satisfy § 1002.107(a)(18) and (19).

11. Section 1002.107(c)(2) and its commentary set forth when a financial institution is permitted to report information based on previously collected data. If the financial institution is permitted to report minority-owned business status or women-owned business status based on previously collected data, the financial institution may but is not required to do so.

12. If a financial institution reports minority-owned business status or women-owned business status based on previously collected data, the financial institution must also report that it is providing that information based on previously collected data.

## Appendix G to Part 1002—Instructions for Collecting and Reporting Ethnicity, Race, and Sex of Small Business Applicants' Principal Owners Under Subpart B

Covered financial institutions are required by subpart B of this part to collect certain information from small business applicants about covered applications, including the ethnicity, race, and sex of the applicant's principal owners. This appendix provides instructions for collecting that information.

### General Instructions

1. Unless a financial institution is reporting based on previously collected data as discussed in Instructions 26 through 29, the financial institution must ask the applicant for the ethnicity, race, and sex of its principal owners for each of the applicant's covered applications. However, a financial institution cannot require an applicant or any principal owner to provide this information.

2. Generally, a financial institution must ask the applicant about the ethnicity, race, and sex of the applicant's principal owners on a paper or electronic data collection form that is separate from the application form and other documents used to collect other information related to the application. See the sample data collection form in appendix E for sample language. For a covered application taken solely by telephone or another medium that does not involve providing any paper or electronic documents, the financial institution must ask the applicant for the principal owners' ethnicity, race, and sex orally if the financial institution is not reporting based on previously collected data. A financial institution may combine the questions regarding the principal owners' ethnicity, race, and sex with a question regarding the applicant's number of principal owners pursuant to § 1002.107(a)(21) and questions regarding the applicant's minority-owned business status and women-owned

business status pursuant to § 1002.107(a)(18) and (19). See the sample data collection form in appendix E.

3. When asking about principal owners' ethnicity, race, and sex, the financial institution must also provide the applicant with the definition of the term ''principal owner'' as set forth in § 1002.102(o). The financial institution satisfies this requirement if it provides the definition of principal owner set forth in the sample data collection form in appendix E.

4. A financial institution may inform the applicant that Federal law requires it to ask for the principal owners' ethnicity, race, and sex to help ensure that all small business applicants for credit are treated fairly and that communities' small business credit needs are being fulfilled. The financial institution must inform the applicant that the applicant is not required to respond to the financial institution's questions regarding the principal owner's ethnicity, race, and sex. The financial institution also must inform the applicant that the financial institution cannot discriminate on the basis of a principal owner's ethnicity, race, or sex, or on whether the applicant provides this information.

5. If it is possible that a financial institution will meet in person with one or more of the applicant's principal owners and the financial institution is not reporting based on previously collected data, the financial institution must inform the applicant that if the applicant does not provide any ethnicity, race, or sex information for at least one principal owner, the financial institution is required to report ethnicity and race on the basis of visual observation and/or surname for at least one of the principal owners that the financial institution has met in person. If a financial institution collects ethnicity, race, and sex information using a paper or electronic data collection form, the financial institution may satisfy this requirement by providing a statement on that form. See the sample data collection form in appendix E. If a financial institution meets in person with a natural person representing an applicant but does not know if the natural person is a principal owner, the financial institution must ask or otherwise determine if that person is a principal owner. See comment 107(a)(20)–10 for examples of when a financial institution has and has not met in person with one or more principal owners. As described in Instruction 23, financial institutions do not report a principal owner's sex based on visual observation or surname.

**Instructions Regarding Ethnicity, Race, and Sex Categories**

6. When asking for a principal owner's sex, a financial institution must allow the applicant to respond using the sex categories set forth in the sample data collection form in appendix E and discussed in comment 107(a)(20)–8. These categories must include the option to self-identify using free-form text on a paper or electronic form or using language that informs the applicant of the opportunity to self-identify when taking the application by means other than a paper or electronic data collection form, such as by telephone.

7. When asking for a principal owner's ethnicity and race, a financial institution must allow the applicant to respond using the aggregate and disaggregated ethnicity and race categories and subcategories as set forth in the sample data collection form in appendix E and discussed in comments 107(a)(20)–6 and –7. The disaggregated subcategories must include the ''other'' disaggregated subcategories that provide the option to self-identify using free-form text on a paper or electronic data collection form or using language that informs the applicant of the opportunity to self-identify when taking the application by means other than a paper or electronic data collection form, such as by telephone.

8. A financial institution must permit an applicant to identify its principal owners as being of a particular Hispanic or Latino disaggregated subcategory (Cuban, Mexican, Puerto Rican, Other Hispanic or Latino) or of a particular Asian disaggregated subcategory (Asian Indian, Chinese, Filipino, Japanese, Korean, Vietnamese, Other Asian) or of a particular Native Hawaiian or Other Pacific Islander disaggregated subcategory (Guamanian or Chamorro, Native Hawaiian, Samoan, Other Pacific Islander) or of a particular Black or African American disaggregated subcategory (African American, Ethiopian, Haitian, Jamaican, Nigerian, Somali, or Other Black or African American) or of a particular American Indian or Alaska Native enrolled or principal tribe. An applicant must be permitted to select a disaggregated ethnicity or race subcategory even if the applicant does not also select the corresponding aggregate ethnicity or aggregate race category. For example, if an applicant selects only the ''Mexican'' disaggregated subcategory, the financial institution reports ''Mexican'' for the ethnicity of the applicant but does not also report ''Hispanic or Latino.''

9. A financial institution must offer the applicant the option of selecting more than one ethnicity, race, and sex for each principal owner. If an applicant selects more than one ethnicity, race, or sex for a principal owner, the financial institution must report each selected designation. The financial institution must also report any additional information that the applicant has provided as free-form text in the appropriate data reporting field. For example, if the applicant chooses to self-identify a principal owner's sex and provides additional information, the financial institution must report that information as free-form text in the appropriate data reporting field. Similarly, if an applicant indicates that a principal owner is Other Asian and provides additional information, such as writing in Cambodian, the financial institution must report that information as free-form text in the appropriate data reporting field.

10. If an applicant provides ethnicity, race, or sex information for one or more principal owners, the financial institution must report the ethnicity, race, and sex as provided by the applicant. For example, if an applicant selects ''Asian'' for a principal owner's race, the financial institution reports ''Asian'' for the race of that principal owner. Similarly, if the applicant selects ''Asian'' and ''Native Hawaiian'' for a particular principal owner, the financial institution reports that principal owner's race as ''Asian'' and ''Native Hawaiian,'' even though ''Native Hawaiian'' is not a disaggregated subcategory for the aggregate ''Asian'' category.

11. A financial institution is neither required nor permitted to verify the ethnicity, race, or sex information that the applicant provides.

**Instructions for Reporting if the Applicant Fails To Provide or Declines To Provide Responses to a Financial Institution's Inquiries**

12. Except as noted in Instruction 17, if the applicant declines to provide a principal owner's ethnicity, race, or sex (such as by answering these questions by checking only the ''I do not wish to provide this information'' box on a paper or electronic data collection form or stating orally that it does not wish to provide this information), the financial institution must report that the applicant declined to provide this information. The financial institution only reports that the applicant declined to provide information if the applicant specifically declines to provide that information. See Instruction 13 for reporting if the applicant does not respond rather than specifically declines to provide information.

13. Except as noted in Instruction 17, if the applicant does not respond to a request about a principal owner's ethnicity, race, or sex, the financial institution must report that the information was not provided by the applicant. For example, if the financial institution provides the applicant with a paper data collection form and asks the applicant to complete and return the form but the applicant does not return it, the financial institution reports that the principal owner's ethnicity, race, and sex was not provided by the applicant. Similarly, if the financial institution provides an electronic data collection form, the applicant indicates that it has two principal owners, the applicant provides ethnicity, race, and sex for the first principal owner, and the applicant does not check any of the boxes (including the ''I do not wish to provide this information'' boxes) for the second principal owner's ethnicity, race, and sex, the financial institution reports the ethnicity, race, and sex that the applicant provided for the first principal owner and reports that ethnicity, race, and sex for the second principal owner were not provided by the applicant.

14. If an applicant provides some but not all of the requested ethnicity, race, and sex information, the financial institution reports the information that was provided by the applicant and reports that the applicant declined to provide or did not provide (as applicable) the remainder of the information. For example, assume an applicant indicates that it has two principal owners and provides ethnicity, race, and sex information for the first principal owner and provides only ethnicity for the second principal owner. Further assume that the applicant does not indicate that it does not wish to provide race or sex information for the second principal owner. In this case, the financial institution reports the ethnicity, race, and sex

information provided for the first principal owner. The financial institution also reports the ethnicity provided for the second principal owner, and reports that the applicant did not provide race and sex information for the second principal owner.

15. If an applicant provides any ethnicity, race, or sex information for any principal owner, the financial institution does not report any additional information based on visual observation and/or surname. For example, if an applicant indicates that it has four principal owners and provides sex information for one principal owner and no other ethnicity, race, or sex information, the financial institution reports the sex information provided for one principal owner. It reports either that the applicant did not provide or declined to provide (as applicable) the ethnicity and race information for one principal owner and the ethnicity, race, and sex information for the other principal owners. The financial institution does not report any ethnicity or race information based on visual observation or surname, even if it is has met in person with one or more principal owners.

16. If an applicant provides information in response to the question requesting a given principal owner's ethnicity, race, or sex and also checks the ''I do not wish to provide this information'' box for that question or otherwise indicates that the applicant does not wish to provide the information, the financial institution reports the information on ethnicity, race, or sex that was provided by the applicant (rather than reporting that the applicant declined to provide the information). For example, if an applicant is completing a paper data collection form and provides information that a principal owner is female and also checks a box to indicate that the applicant does not wish to provide information regarding that principal owner's sex, the financial institution reports the principal owner's sex as female.

**Instructions for Collecting Ethnicity and Race Information via Visual Observation and/or Surname if the Applicant Declines To Provide Information or Does Not Respond**

17. If an applicant does not provide any ethnicity, race, or sex information for any of its principal owners or declines to provide all of the requested ethnicity, race, or sex information, and during the application process the financial institution meets in person with at least one principal owner of that applicant, the financial institution must collect the ethnicity and race of the principal owner(s) with whom it meets on the basis of visual observation and/or surname. For example, assume a financial institution provides electronic data collection forms to applicants, and an applicant fails to complete and submit the data collection form. Assume that the financial institution is not permitted to report based on previously collected data. Also, assume that the financial institution meets in person with two of the applicant's four principal owners at the same time during the application process. The financial institution reports the ethnicity and race information for the two principal owners it met with in person based on visual observation and/or surname. Additionally, as noted in Instruction 21, the financial institution reports that it is reporting this information based on visual observation and/or surname. The financial institution reports that the applicant did not provide sex information for these two principal owners. It also reports that the applicant did not provide ethnicity, race, and sex information for the other two principal owners. For additional information on when a financial institution has or has not met in person with a principal owner, see comment 107(a)(20)–10.

18. For purposes of determining whether reporting based on visual observation and/or surname is required, a financial institution is considered to have met in person with a principal owner if the financial institution has a meeting via an electronic medium with the principal owner and can visually observe the principal owner using a video component. For additional information on when a financial institution has or has not met in person with a principal owner, see comment 107(a)(20)–10. For additional information on when reporting based on visual observation and/or surname is required, see comment 107(a)(20)–9.

19. A financial institution is not required to report ethnicity and race information based on visual observation and/or surname if the financial institution only meets in person with one or more principal owners after the application process is complete, for example, at loan closing or account opening. In those circumstances, the financial institution may report that the information was not provided by the applicant or that the applicant declined to provide the information, as applicable.

20. A financial institution is required to collect race and ethnicity information based on visual observation and/or surname at only one meeting with one or more principal owners. If the financial institution meets in person with another principal owner at a different meeting, the financial institution is permitted, but not required, to also collect the other principal owner's race and ethnicity information via visual observation and/or surname. For example, assume that a financial institution meets in person with one of an applicant's principal owners on June 1 and records that principal owner's ethnicity and race. Also, assume that the financial institution meets in person with all four of the applicant's principal owners on June 10. The financial institution is permitted, but not required, to record the other principal owners' ethnicity and race information based on the meeting that occurs on June 10, because it already recorded one principal owner's ethnicity and race based on the meeting that occurred on June 1.

21. If a financial institution reports ethnicity and race based on visual observation and/or surname and is not relying on previously collected data, the financial institution also must report that the information was collected on the basis of visual observation and/or surname. If a financial institution is relying on previously collected data that the financial institution collected via visual observation and/or surname, the financial institution reports that it is reporting the information based on previously collected data, and that it is providing the information based on visual observation and/or surname.

22. When a financial institution reports ethnicity and race on the basis of visual observation and/or surname, the financial institution must select only from the following aggregate categories: Ethnicity (Hispanic or Latino; not Hispanic or Latino); race (American Indian or Alaska Native; Asian; Black or African American; Native Hawaiian or Other Pacific Islander; White).

23. A financial institution never reports sex based on visual observation or surname. If an applicant declines or otherwise does not provide a principal owner's sex, the financial institution reports that the applicant declined to provide that information or that the information was not provided by the applicant, as applicable.

**Instructions Regarding Persons who Are Not Principal Owners and When an Applicant Has Fewer Than Four Principal Owners**

24. A financial institution does not report a guarantor's ethnicity, race, and sex unless the guarantor is also a principal owner of the applicant.

25. Because there are data reporting fields for four principal owners, when submitting data to the Bureau, a financial institution will need to report that the requirement to report ethnicity, race, and sex is not applicable for some principal owners if the applicant has fewer than four principal owners. For example, if an applicant has only one principal owner (*i.e.,* only one natural person directly owns 25 percent or more of the applicant's equity interests), the financial institution reports that the requirement to report ethnicity, race, and sex is not applicable in the data fields for principal owners two through four.

**Instructions for Reporting Based on Previously Collected Data**

26. Section 1002.107(c)(2) and its commentary set forth when a financial institution is permitted to report information based on previously collected data. If the financial institution is permitted to report ethnicity, race, or sex information based on previously collected data, the financial institution may but is not required to do so.

27. If a financial institution reports ethnicity, race, or sex information based on previously collected data, the financial institution must also report that it is providing that information based on previously collected data.

28. If a financial institution reports one or more principal owner's ethnicity, race, or sex information based on previously collected data, the financial institution does not need to collect any additional ethnicity, race, or sex information. However, the financial institution may need to report that the applicant did not provide or declined to provide information when the financial institution previously collected the data, as applicable.

29. If a financial institution is reporting a principal owner's ethnicity and/or race based on data that the financial institution previously collected via visual observation and/or surname, the financial institution

reports that it is reporting ethnicity and race based on previously collected data and based on visual observation and/or surname. Additionally, the financial institution reports that the applicant declined to provide information about the principal owner's sex or that the applicant did not provide the principal owner's sex, as applicable, and reports that the financial institution is reporting sex based on previously collected data.

## Appendix H to Part 1002—Tolerances for Bona Fide Errors in Data Reported Under Subpart B

As set out in § 1002.112(b) and in comment 112(b)–1, a financial institution is presumed to maintain procedures reasonably adapted to avoid errors with respect to a given data field if the number of errors found in a random sample of a financial institution's data submission for a given data field do not equal or exceed the threshold in column C of the following table (Table 1, Tolerance Thresholds for Bona Fide Errors):

### Table 1 to Appendix H—Tolerance Thresholds for Bona Fide Errors

| Small Business Lending Application Register Count (A) | Random Sample Size[959] (B) | Threshold (#) (C) | Threshold (%) (D) |
|---|---|---|---|
| 25 – 50 | 30 | 3 | 10.0 |
| 51 – 100 | 30 | 3 | 10.0 |
| 101 – 130 | 47 | 3 | 6.4 |
| 131 – 190 | 56 | 3 | 5.4 |
| 191 – 500 | 59 | 3 | 5.1 |
| 501 – 100,000 | 79 | 4 | 5.1 |
| 100,001+ | 159 | 4 | 2.5 |

The size of the random sample, under column B, shall depend on the size of the financial institution's small business lending application register, as shown in column A of the Threshold Table.[959]

The thresholds in column C of the Threshold Table reflect the number of unintentional errors a financial institution may make within a particular data field (*e.g.,* loan amount or gross annual revenue) in a small business lending application register that would be deemed bona fide errors for purposes of § 1002.112(b).

For instance, a financial institution that submitted a small business lending application register containing 45 applications would be subject to a threshold of three errors per data field. If the financial institution had made two errors in reporting loan amount and two errors reporting gross annual income, all of these errors would be covered by the bona fide error provision of § 1002.112(b) and would not constitute a violation of the Act or this part. If the same financial institution had made four errors in reporting loan amount and two errors reporting gross annual income, the bona fide error provision of § 1002.112(b) would not apply to the four loan amount errors but would still apply to the two gross annual income errors.

Even when the number of errors in a particular data field do not equal or exceed the threshold in column C, if either there is a reasonable basis to believe that errors in that field were intentional or there is other evidence that the financial institution did not maintain procedures reasonably adapted to avoid such errors, then the errors are not bona fide errors under § 1002.112(b). To illustrate, assume that a financial institution has incorrectly coded withdrawn applications as denials to such an extent that it likely prevents reliable fair lending analysis of underwriting disparities. If so, the errors would not be deemed bona fide errors under § 1002.112(b) and would violate the Act and this part.

For purposes of determining bona fide errors under § 1002.112(b), the term ''data field'' generally refers to individual fields. However, with respect to information on the ethnicity or race of an applicant or borrower, or co-applicant or co-borrower, a data field group may consist of more than one field. If one or more of the fields within an ethnicity or race field group have errors, they count as one (and only one) error for that data field group.

■ 6. In Supplement I to part 1002:

■ a. Under *Section 1005.5—Rules Concerning Requests for Information,* revise *Paragraph 5(a)(2)* by revising the heading and adding comment –4, and revise *Paragraph 5(a)(4)* including the heading.

■ b. Add *Section 1002.102—Definitions; Section 1002.103—Covered Applications; Section 1002.104—Covered Credit Transactions and Excluded Transactions; Section 1002.105—Covered Financial Institutions and Exempt Institutions; Section 1002.106—Business and Small Business; Section 1002.107—Compilation of Reportable Data; Section 1002.108—Firewall; Section 1002.109—Reporting of Data to the Bureau; Section 1002.110—Publication of Data; Section 1002.111—Recordkeeping;* and *Section 1002.112—Enforcement.*

The revisions and additions read as follows:

## Supplement I to Part 1002—Official Interpretations

*Section 1002.5—Rules Concerning Requests for Information*

*5(a) General rules.*

* * * * *

5(a)(2) Required collection of information.

* * * * *

4. *Information required by subpart B.* Subpart B of this part generally requires creditors that are covered financial institutions as defined in § 1002.105(a) to collect and report information about the

[959] For a financial institution with fewer than 30 entries in its small business lending application register, the full sample size is the financial insitution's total number of entries. The threshold number for such financial institution's remains three. Accordingly, the threshold percentage will be higher for financial institions with fewer than 30 in their registers.

ethnicity, race, and sex of the principal owners of applicants for certain small business credit, as well as whether the applicant is minority-owned or women-owned as defined in § 1002.102(m) and (s), respectively.

*5(a)(4) Other permissible collection of information.*

1. *Other permissible collection of information.* Information regarding ethnicity, race, and sex that is not required to be collected pursuant to Regulation C, 12 CFR part 1003, or subpart B of this part, may nevertheless be collected under the circumstances set forth in § 1002.5(a)(4) without violating § 1002.5(b). The information collected pursuant to 12 CFR part 1003 must be retained pursuant to the requirements of § 1002.12. The information collected pursuant to subpart B of this part must be retained pursuant to the requirements set forth in § 1002.111.

* * * * *

*Section 1002.102—Definitions*

*102(j) Dwelling.*

1. *Consistency with Regulation C.* Bureau interpretations that appear in supplement I to part 1003 containing official commentary in connection with § 1003.2(f) are applicable to the definition of a dwelling in § 1002.102(j).

2. *Dwelling under subpart A.* The definition of dwelling under § 1002.14(b)(2) applies to relevant provisions under subpart A, and § 1002.102(j) is not intended to repeal, abrogate, annul, impair, or interfere with any existing interpretations, orders, agreements, ordinances, rules, or regulations adopted or issued pursuant to § 1002.14(b)(2).

*102(l) Minority individual.*

1. *Purpose of definition.* The definition of minority individual is used only when an applicant determines if it is a minority-owned business pursuant to §§ 1002.102(m) and 1002.107(a)(18). A financial institution provides an applicant with the definition of minority individual when asking the applicant to determine if its business is a minority-owned business, as defined in § 1002.102(m). An applicant determines if the natural persons who own and control and to whom the business's profits or losses accrue are minority individuals when the applicant provides its minority-owned business status pursuant to § 1002.107(a)(18). Separately, pursuant to § 1002.107(a)(20) and related commentary, a financial institution may be required to report a principal owner's ethnicity and race based on visual observation and/or surname. However, the definition of minority individual in § 1002.102(*l*) is not used when determining the race or ethnicity of a principal owner.

2. *Multi-racial and multi-ethnic individuals.* For purposes of subpart B of this part, a natural person who is multi-racial or multi-ethnic is a minority individual. For example, a natural person who is both Asian and White is a minority individual.

3. *Relationship to disaggregated subcategories used to determine ethnicity and race of principal owners.* The term ''minority individual'' is defined in § 1002.102(*l*) using aggregate ethnicity (Hispanic or Latino) and race (American Indian or Alaska Native, Asian, Black or African American, and Native Hawaiian or Other Pacific Islander) categories. Separately an applicant may provide a principal owner's ethnicity and race using aggregate categories and/or disaggregated subcategories for purposes of § 1002.107(a)(20). However, as discussed in comment 107(a)(20)–11, a financial institution may only use aggregate ethnicity and race categories when required to report a principal owner's ethnicity and race based on visual observation and/or surname.

*102(m) Minority-owned business.*

1. *In general.* In order to be a minority-owned business for purposes of subpart B of this part, a business must satisfy both prongs of the definition of minority-owned business. First, one or more minority individuals must own or control more than 50 percent of the business. However, it is not necessary that one or more minority individuals both own and control more than 50 percent of the business. For example, a business that is owned entirely by minority individuals, but is not controlled by any minority individuals satisfies the first prong of the definition. If a business does not satisfy this first prong of the definition, it is not a minority-owned business. Second, 50 percent or more of the net profits or losses must accrue to one or more minority individuals. If a business does not satisfy this second prong of the definition, it is not a minority-owned business, regardless of whether it satisfies the first prong of the definition.

2. *Purpose of definition.* The definition of minority-owned business is used only when an applicant determines if it is a minority-owned business for purposes of § 1002.107(a)(18). A financial institution provides an applicant with the definition of minority-owned business when asking the applicant to provide its minority-owned business status pursuant to § 1002.107(a)(18), but the financial institution is neither permitted nor required to make its own determination regarding the applicant's minority-owned business status.

3. *Further clarifications of terms used in the definition of minority-owned business.* In order to assist an applicant when determining whether it is a minority-owned business, a financial institution may provide the applicant with the definitions of ownership, control, and accrual of net profits or losses and related concepts set forth in comments 102(m)–4 through –6. A financial institution may assist an applicant when the applicant is determining its minority-owned business status but is not required to do so. For purposes of reporting an applicant's status, a financial institution relies on the applicant's determinations of its ownership, control, and accrual of net profits and losses.

4. *Ownership.* For purposes of determining if a business is a minority-owned business, a natural person owns a business if that natural person directly or indirectly, through any contract, arrangement, understanding, relationship or otherwise, has an equity interest in the business. Examples of ownership include being the sole proprietor of a sole proprietorship, directly or indirectly owning or holding the stock of a corporation or company, directly or indirectly having a partnership interest in a business, or directly or indirectly having a membership interest in a limited liability company. Indirect as well as direct ownership are used when determining ownership for purposes of §§ 1002.102(m) and 1002.107(a)(18). Thus, where applicable, ownership must be traced through corporate or other indirect ownership structures. For example, assume that the applicant is company A. If company B owns 60 percent of applicant company A and a natural person owns 100 percent of company B, the natural person owns 60 percent of applicant company A. Similarly, if a natural person directly owns 20 percent of applicant company A and is an equal partner in partnership B that owns the remaining 80 percent of applicant company A, the natural person owns 60 percent of applicant company A (*i.e.,* 20 percent due through direct ownership and 40 percent indirectly through partnership B). A trustee is considered the owner of the trust. Thus, if a trust owns a business and the trust has two co-trustees, each co-trustee owns 50 percent of the business.

5. *Control.* A natural person controls a business if that natural person has significant responsibility to manage or direct the business. A natural person controls a business if the natural person is an executive officer or senior manager (*e.g.,* a chief executive officer, chief financial officer, chief operating officer, managing member, general partner, president, vice president, or treasurer) or regularly performs similar functions. Additionally, a business may be controlled by two or more minority individuals if those individuals collectively control the business, such as constituting a majority of the board of directors or a majority of the partners of a partnership.

6. *Accrual of net profits or losses.* A business's net profits and losses accrue to a natural person if that natural person receives the net profits or losses, is legally entitled or required to receive the net profits or losses, or is legally entitled or required to recognize the net profits or losses for tax purposes.

*102(o) Principal owner.*

1. *Natural person.* Only a natural person can be a principal owner of a business for purposes of subpart B of this part. Entities, such as trusts, partnerships, limited liability companies, and corporations, are not principal owners for this purpose. Additionally, a natural person must directly own an equity share of 25 percent or more in the business in order to be a principal owner. Unlike the determination of ownership for purposes of collecting and reporting minority-owned business status and women-owned business status, indirect ownership is not considered when determining if someone is a principal owner for purposes of collecting and reporting principal owners' ethnicity, race, and sex or the number of principal owners. Thus, when determining who is a principal owner, ownership is not traced through multiple corporate structures to determine if a natural person owns 25 percent or more of the equity interests. For example, if natural person A directly owns 20 percent of a business, natural person B directly owns 20 percent, and partnership C owns 60 percent, the business does not have any owners who

satisfy the definition of principal owner set forth in § 1002.102(o), even if natural person A and natural person B are the only partners in the partnership C. Similarly, if natural person A directly owns 30 percent of a business, natural person B directly owns 20 percent, and trust D owns 50 percent, natural person A is the only principal owner as defined in § 1002.102(o), even if natural person B is the sole trustee of trust D.

2. *Purpose of definition.* A financial institution shall provide an applicant with the definition of principal owner when asking the applicant to provide the number of its principal owners pursuant to § 1002.107(a)(21) and the ethnicity, race, and sex of its principal owners pursuant to § 1002.107(a)(20). If a financial institution meets in person with a natural person about a covered application, the financial institution may be required to determine if a natural person with whom it meets is a principal owner in order to collect and report the principal owner's ethnicity and race based on visual observation and/or surname. (See comments 107(a)(20)–5 and –9.) Additionally, if an applicant does not provide the number of its principal owners in response to the financial institution's request pursuant to § 1002.107(a)(21), the financial institution may need to determine and report the number of the applicant's principal owners based on other documents or information. (See comments 107(a)(21)–1 through –3.)

*102(s) Women-owned business.*

1. *In general.* In order to be a women-owned business for purposes of subpart B of this part, a business must satisfy both prongs of the definition of women-owned business. First, one or more women must own or control more than 50 percent of the business. However, it is not necessary that one or more women both own and control more than 50 percent of the business. For example, a business that is owned entirely by women, but is not controlled by any women satisfies the first prong of the definition. If a business does not satisfy this first prong of the definition, it is not a women-owned business. Second, 50 percent or more of the net profits or losses must accrue to one or more women. If a business does not satisfy this second prong of the definition, it is not a women-owned business, regardless of whether it satisfies the first prong of the definition.

2. *Purpose of definition.* The definition of women-owned business is used only when an applicant determines if it is a women-owned business pursuant to § 1002.107(a)(19). A financial institution provides an applicant with the definition of women-owned business when asking the applicant to provide its women-owned business status pursuant to § 1002.107(a)(19), but the financial institution is neither permitted nor required to make its own determination regarding the applicant's women-owned business status.

3. *Further clarifications of terms used in the definition of women-owned business.* In order to assist an applicant when determining whether it is a women-owned business, a financial institution may provide the applicant with the definitions of ownership, control, and accrual of net profits or losses and related concepts set forth in comments 102(s)–4 through –6. A financial institution may assist an applicant when the applicant is determining its women-owned business status but is not required to do so. For purposes of reporting an applicant's status, a financial institution relies on the applicant's determinations of its ownership, control, and accrual of net profits and losses.

4. *Ownership.* For purposes of determining if a business is a women-owned business, a natural person owns a business if that natural person directly or indirectly, through any contract, arrangement, understanding, relationship or otherwise, has an equity interest in the business. Examples of ownership include being the sole proprietor of a sole proprietorship, directly or indirectly owning or holding the stock of a corporation or company, directly or indirectly having a partnership interest in a business, or directly or indirectly having a membership interest in a limited liability company. Indirect as well as direct ownership are used when determining ownership for purposes of §§ 1002.102(s) and 1002.107(a)(19). Thus, where applicable, ownership must be traced through corporate or other indirect ownership structures. For example, assume that the applicant is company A. If company B owns 60 percent of the applicant company A and a natural person owns 100 percent of company B, the natural person owns 60 percent of the applicant company A. Similarly, if a natural person directly owns 20 percent of the applicant company A and is an equal partner in a partnership B that owns the remaining 80 percent of the applicant company A, the natural person owns 60 percent of applicant company A (*i.e.,* 20 percent due through direct ownership and 40 percent indirectly through partnership B). A trustee is considered the owner of the trust. Thus, if a trust owns a business and the trust has two co-trustees, each co-trustee owns 50 percent of the business.

5. *Control.* A natural person controls a business if that natural person has significant responsibility to manage or direct the business. A natural person controls a business if the natural person is an executive officer or senior manager (*e.g.,* a chief executive officer, chief financial officer, chief operating officer, managing member, general partner, president, vice president, or treasurer) or regularly performs similar functions. Additionally, a business may be controlled by two more women if those women collectively control the business, such as constituting a majority of the board of directors or a majority of the partners of a partnership.

6. *Accrual of net profits or losses.* A business's net profits and losses accrue to a natural person if that natural person receives the net profits or losses, is legally entitled or required to receive the net profits or losses, or is legally entitled or required to recognize the net profits or losses for tax purposes.

*Section 1002.103—Covered Applications*

*103(a) In general.*

1. *In general.* Subject to the requirements of subpart B of this part, a financial institution has latitude to establish its own application process or procedures, including designating the type and amount of information it will require from applicants.

2. *Procedures used.* The term ''procedures'' refers to the actual practices followed by a financial institution as well as its stated application procedures. For example, if a financial institution's stated policy is to require all applications to be in writing on the financial institution's application form, but the financial institution also makes credit decisions based on oral requests, the financial institution's procedures are to accept both oral and written applications.

3. *Consistency with subpart A.* Bureau interpretations that appear in this supplement I in connection with §§ 1002.2(f) and 1002.9 are generally applicable to the definition of a covered application in § 1002.103. However, the definition of a covered application in § 1002.103 does not include inquiries and prequalification requests. The definition of a covered application also does not include reevaluation, extension, or renewal requests on an existing business credit account, unless the request seeks additional credit amounts. See § 1002.103(b).

4. *Requests for multiple covered credit transactions at one time.* Assuming the requirements of a covered application are met, if an applicant makes a request for two or more covered credit transactions at the same time, the financial institution reports each request for a covered credit transaction as a separate covered application. For example, if an applicant requests both a term loan and a line of credit on an application form, the financial institution reports each request for a covered credit transaction as a separate covered application. Section 1002.107(c)(2) sets forth the requirements for reusing certain data required under § 1002.107(a) across multiple applications.

5. *Initial request for a single covered credit transaction that results in the origination of multiple covered credit transactions.* Assuming the requirements of a covered application are met, if an applicant initially makes a request for one covered credit transaction, but over the course of the application process requests and obtains multiple covered credit transactions, each covered credit transaction must be reported as a separate covered application.

6. *Requests for multiple lines of credit at one time.* Assuming the requirements of a covered application are met, if an applicant requests multiple lines of credit on a single credit account, it is reported as one or more covered applications based on the procedures used by the financial institution for the type of credit account. For example, if a financial institution treats a request for multiple lines of credit at one time as sub-components of a single account, the financial institution reports the request as a single covered application. If, on the other hand, the financial institution treats each line of credit as a separate account, then the financial institution reports each request for a line of credit as a separate covered application, as set forth in comment 103(a)–4.

7. *Changes in whether there is a covered credit transaction.* In certain circumstances, an applicant may change the type of product

requested during the course of the application process. Assuming other requirements of a covered application are met, if an applicant initially requests a product that is not a covered credit transaction, but during the application process decides to seek instead a product that is a covered credit transaction, the application is a covered application and must be reported. If, on the other hand, an applicant initially requests a product that is a covered credit transaction, but then during the application process decides instead to seek a product that is not a covered credit transaction, the application is not a covered application and thus is not reported. If an applicant initially requests a product that is a covered credit transaction, the financial institution counteroffers with a product that is not a covered credit transaction, and the applicant declines to proceed or fails to respond, the application is reported as a covered application. For example, if an applicant initially applies for a term loan, but then, after consultation with the financial institution, decides that a lease would better meet its needs and decides to proceed with that product, the application is not a covered application and thus is not reported. However, if an applicant initially applies for a term loan, the financial institution offers to consider the applicant only for a lease, and the applicant refuses, the transaction is a covered application that must be reported.

*103(b) Circumstances that are not covered applications.*

1. *In general.* The circumstances set forth in § 1002.103(b) are not covered applications for purposes of subpart B of this part, even if considered applications under subpart A of this part. However, in no way are the exclusions in § 1002.103(b) intended to repeal, abrogate, annul, impair, change, or interfere with the scope of the term application in § 1002.2(f) as applicable to subpart A.

2. *Reevaluation, extension, or renewal requests that do not request additional credit amounts.* An applicant's request to change one or more terms of an existing account does not constitute a covered application, unless the applicant is requesting additional credit amounts on the account. For example, an applicant's request to extend the duration on a line of credit or to remove a guarantor would not be a covered application.

3. *Reevaluation, extension, or renewal requests that request additional credit amounts.* An applicant's request for additional credit amounts on an existing account that is a covered credit transaction constitutes a covered application. For example, an applicant's request for a line increase on an existing line of credit, made in accordance with a financial institution's procedures for the type of credit requested, would be a covered application. As discussed in comment 107(a)(7)–4, when reporting a covered application that seeks additional credit amounts on an existing account, the financial institution need only report the additional credit amount sought, and not the entire credit amount. For example, if an applicant currently has a line of credit account for $100,000, and seeks to increase the line to $150,000, the financial institution reports the amount applied for as $50,000.

4. *Reviews or evaluations initiated by the financial institution.* For purposes of subpart B of this part, the term covered application does not include evaluations or reviews of existing accounts initiated by the financial institution because the applicant has not made the request. For example, if a creditor conducts periodic reviews of its existing lines of credit and decides to increase the applicant's line by $10,000, it is not a covered application because the applicant never made a request for the additional credit amounts. However, if such an evaluation or review of an existing account by a financial institution results in the financial institution inviting the applicant to apply for additional credit amounts on an existing account that is a covered credit transaction, and the applicant does so, the applicant's request constitutes a covered application for purposes of subpart B of this part. Similarly, the term covered application also does not include solicitations and firm offers of credit.

5. *Inquiries and prequalification requests.* An inquiry is a request by a prospective applicant for information about credit terms offered by the financial institution. A prequalification request is a request by a prospective applicant for a preliminary determination on whether the prospective applicant would likely qualify for credit under a financial institution's standards or for a determination on the amount of credit for which the prospective applicant would likely qualify. Inquiry and prequalification requests are not covered applications under subpart B of this part, even though in certain circumstances inquiries and prequalification requests may constitute applications under subpart A.

*Section 1002.104—Covered Credit Transactions and Excluded Transactions*

*104(a) Covered credit transaction.*

1. *General.* The term ''covered credit transaction'' includes all business credit (including loans, lines of credit, credit cards, and merchant cash advances) unless otherwise excluded under § 1002.104(b).

*104(b) Excluded transactions.*

1. *Factoring.* The term ''covered credit transaction'' does not cover factoring as described herein. For the purpose of this subpart, factoring is an accounts receivable purchase transaction between businesses that includes an agreement to purchase, transfer, or sell a legally enforceable claim for payment for goods that the recipient has supplied or services that the recipient has rendered but for which payment has not yet been made. This description of factoring is not intended to repeal, abrogate, annul, impair, or interfere with any existing interpretations, orders, agreements, ordinances, rules, or regulations adopted or issued pursuant to comment 9(a)(3)–3. A financial institution shall report an extension of business credit incident to a factoring arrangement that is otherwise a covered credit transaction as a ''Other sales-based financing transaction'' under § 1002.107(a)(5).

2. *Leases.* The term ''covered credit transaction'' does not cover leases as described herein. A lease, for the purpose of this subpart, is a transfer from one business to another of the right to possession and use of goods for a term, and for primarily business or commercial (including agricultural) purposes, in return for consideration. A lease does not include a sale, including a sale on approval or a sale or return, or a transaction resulting in the retention or creation of a security interest.

3. *Consumer-designated credit.* The term ''covered credit transaction'' does not include consumer-designated credit used for business purposes. A transaction qualifies as consumer-designated credit if the financial institution offers or extends the credit primarily for personal, family, or household purposes. For example, an open-end credit account used for both personal and business purposes is not business credit for the purpose of subpart B of this part unless the financial institution designated or intended for the primary purpose of the account to be business-related.

4. *Credit secured by certain investment properties.* The term ''covered credit transaction'' does not include an extension of credit that is secured by 1–4 individual dwelling units that the applicant (or one or more of the applicant's principal owners) does not, or will not, occupy. A financial institution should determine whether the property to which the covered credit transaction or application relates is or will be used as an investment property. For purposes of this comment, a property is an investment property if the applicant or one or more of the applicant's principal owners does not or will not occupy the property. For example, if an applicant purchases a property, does not occupy the property, and generates income by renting the property, the property is an investment property for purposes of this comment. Similarly, if an applicant purchases a property, does not occupy the property, and does not generate income by renting the property, but intends to generate income by selling the property, the property is an investment property. A property is an investment property if the applicant does not or will not occupy the property, even if the applicant does not consider the property as owned for investment purposes. For example, if a corporation purchases a property that is a dwelling under § 1002.102(j), that it does not occupy, but that is for the long-term residential use of its employees, the property is an investment, even if the corporation considers the property as owned for business purposes rather than investment purposes, does not generate income by renting the property, and does not intend to generate income by selling the property at some point in time. If the property is for transitory use by employees, the property would not be considered a dwelling under § 1002.102(j).

*104(b)(1) Trade credit.*

1. *General.* Trade credit, as defined in § 1002.104(b)(1), is excluded from the definition of a covered credit transaction. An example of trade credit involves a supplier that finances the sale of equipment, supplies, or inventory. However, an extension of business credit by a financial institution other than the supplier for the financing of such items is not trade credit.

2. *Trade credit under subpart A.* The definition of trade credit under comment

9(a)(3)–2 applies to relevant provisions under subpart A, and § 1002.104(b)(1) is not intended to repeal, abrogate, annul, impair, or interfere with any existing interpretations, orders, agreements, ordinances, rules, or regulations adopted or issued pursuant to comment 9(a)(3)–2.

*Section 1002.105—Covered Financial Institutions and Exempt Institutions*

*105(a) Financial institution.*

1. *Examples.* Section 1002.105(a) defines a financial institution as any partnership, company, corporation, association (incorporated or unincorporated), trust, estate, cooperative organization, or other entity that engages in any financial activity. This definition includes, but is not limited to, banks, savings associations, credit unions, online lenders, platform lenders, community development financial institutions, lenders involved in equipment and vehicle financing (captive financing companies and independent financing companies), commercial finance companies, organizations exempt from taxation pursuant to 26 U.S.C. 501(c), and governments or governmental subdivisions or agencies.

2. *Motor vehicle dealers.* Pursuant to § 1002.101(a), subpart B of this part excludes from coverage persons defined by section 1029 of the Consumer Financial Protection Act of 2010, title X of the Dodd-Frank Wall Street Reform and Consumer Protection Act, Public Law 111–203, 124 Stat. 1376, 2004 (2010).

*105(b) Covered financial institution.*

1. *Preceding calendar year.* The definition of covered financial institution refers to preceding calendar years. For example, in 2026, the two preceding calendar years are 2024 and 2025. Accordingly, in 2026, Financial Institution A does not meet the loan-volume threshold in § 1002.105(b) if did not originate at least 25 covered credit transactions for small businesses both during 2024 and during 2025.

2. *Origination threshold.* A financial institution qualifies as a covered financial institution based on total covered credit transactions originated for small businesses, rather than covered applications received from small businesses. For example, if in both 2024 and 2025, Financial Institution B received 30 covered applications from small businesses and originated 20 covered credit transactions for small businesses, then for 2026, Financial Institution B is not a covered financial institution.

3. *Annual consideration.* Whether a financial institution is a covered financial institution in a particular year depends on its small business lending activity in the preceding two calendar years. Therefore, whether a financial institution is a covered financial institution is an annual consideration for each year that data may be compiled and maintained for purposes of subpart B of this part. A financial institution may be a covered financial institution for a given year of data collection (and the obligations arising from qualifying as a covered financial institution shall continue into subsequent years, pursuant to §§ 1002.110 and 1002.111), but the same financial institution may not be a covered financial institution for the following year of data collection. For example, Financial Institution C originated 30 covered transactions for small businesses in both 2024 and 2025. In 2026, Financial Institution C is a covered financial institution and therefore is obligated to compile and maintain applicable 2026 small business lending data under § 1002.107(a). During 2026, Financial Institution C originates 10 covered transactions for small businesses. In 2027, Financial Institution C is not a covered financial institution with respect to 2027 small business lending data, and is not obligated to compile and maintain 2027 data under § 1002.107(a) (although Financial Institution C may volunteer to collect and maintain 2027 data pursuant to § 1002.5(a)(4)(vii) and as explained in comment 105(b)–7). Pursuant to § 1002.109(a), Financial Institution C shall submit its small business lending application register for 2026 data in the format prescribed by the Bureau by June 1, 2027 because Financial Institution C is a covered financial institution with respect to 2026 data, and the data submission deadline of June 1, 2027 applies to 2026 data.

4. *Merger or acquisition—coverage of surviving or newly formed institution.* After a merger or acquisition, the surviving or newly formed financial institution is a covered financial institution under § 1002.105(b) if it, considering the combined lending activity of the surviving or newly formed institution and the merged or acquired financial institutions (or acquired branches or locations), satisfies the criteria included in § 1002.105(b). For example, Financial Institutions A and B merge. The surviving or newly formed financial institution meets the threshold in § 1002.105(b) if the combined previous components of the surviving or newly formed financial institution (A plus B) would have reported at least 25 covered credit transactions for small businesses for each of the two preceding calendar years. Similarly, if the combined previous components and the surviving or newly formed financial institution would have reported at least 25 covered transactions for small businesses for the year previous to the merger as well as 25 covered transactions for small businesses for the year of the merger, the threshold described in § 1002.105(b) would be met and the surviving or newly formed financial institution would be a covered institution under § 1002.105(b) for the year following the merger. Comment 105(b)–5 discusses a financial institution's responsibilities with respect to compiling and maintaining (and subsequently reporting) data during the calendar year of a merger.

5. *Merger or acquisition—coverage specific to the calendar year of the merger or acquisition.* The scenarios described below illustrate a financial institution's responsibilities specifically for data from the calendar year of a merger or acquisition. For purposes of these illustrations, an ''institution that is not covered'' means either an institution that is not a financial institution, as defined in § 1002.105(a), or a financial institution that is not a covered financial institution, as defined in § 1002.105(b).

i. Two institutions that are not covered financial institutions merge. The surviving or newly formed institution meets all of the requirements necessary to be a covered financial institution. No data are required to be compiled, maintained, or reported for the calendar year of the merger (even though the merger creates an institution that meets all of the requirements necessary to be a covered financial institution).

ii. A covered financial institution and an institution that is not covered merge. The covered financial institution is the surviving institution, or a new covered financial institution is formed. For the calendar year of the merger, data are required to be compiled, maintained, and reported for covered applications from the covered financial institution and is optional for covered applications from the financial institution that was previously not covered.

iii. A covered financial institution and an institution that is not covered merge. The institution that is not covered is the surviving institution and remains not covered after the merger, or a new institution that is not covered is formed. For the calendar year of the merger, data are required to be compiled and maintained (and subsequently reported) for covered applications from the previously covered financial institution that took place prior to the merger. After the merger date, compiling, maintaining, and reporting data is optional for applications from the institution that was previously covered.

iv. Two covered financial institutions merge. The surviving or newly formed financial institution is a covered financial institution. Data are required to be compiled and maintained (and subsequently reported) for the entire calendar year of the merger. The surviving or newly formed financial institution files either a consolidated submission or separate submissions for that calendar year.

6. *Foreign applicability.* As discussed in comment 1(a)–2, Regulation B (including subpart B) generally does not apply to lending activities that occur outside the United States.

7. *Voluntary collection and reporting.* Section 1002.5(a)(4)(vii) through (ix) permits a creditor that is not a covered financial institution under § 1002.105(b) to voluntarily collect and report information regarding covered applications in certain circumstances. If a creditor is voluntarily collecting information for covered applications regarding whether the applicant is a minority-owned business under § 1002.107(a)(18) or a women-owned business under § 1002.107(a)(19), and regarding the ethnicity, race, and sex of the applicant's principal owners under § 1002.107(20), it shall do so in compliance with §§ 1002.107, 1002.108, 1002.111, 1002.112, and 1002.114 as though it were a covered financial institution. See also comment 5(a)(4)–1. If a creditor is voluntarily reporting those covered applications to the Bureau, it shall do so in compliance with §§ 1002.109 and 1002.110 as though it were a covered financial institution.

*Section 1002.106—Business and Small Business*

*106(b) Small business.*

1. *Change in determination of small business status—business is ultimately not a small business.* If a financial institution initially determines an applicant is a small business as defined in § 1002.106 based on available information and collects data required by § 1002.107(a)(18) through (20) but later concludes that the applicant is not a small business, the financial institution may process and retain the data without violating the Act or this regulation if it meets the requirements of § 1002.112(c)(3). The financial institution shall not report the application on its small business lending application register pursuant to § 1002.109.

2. *Change in determination of small business status—business is ultimately a small business.* Consistent with § 1002.107(a)(14), a financial institution need not independently verify gross annual revenue. If a financial institution initially determines that the applicant is not a small business as defined in § 1002.106, but later concludes the applicant is a small business, the financial institution shall endeavor to compile, maintain, and report the data required under § 1002.107(a) in a manner that is reasonable under the circumstances. For example, if the applicant initially provides a gross annual revenue of $5.5 million (that is, above the threshold for a small business as defined in § 1002.106(b)), but during the course of underwriting the financial institution discovers the applicant's gross annual revenue was in fact $4.75 million (meaning that the applicant is within the definition of a small business under § 1002.106(b)), the financial institution is required to report the covered application pursuant to § 1002.109. In this situation, the financial institution shall take reasonable steps upon discovery to compile, maintain, and report the data necessary under § 1002.107(a) to comply with subpart B of this part for that covered application. Thus, in this example, even if the financial institution's procedure is typically to request applicant-provided data together with the application form, in this circumstance, the financial institution shall seek to collect the data during the application process necessary to comply with subpart B in a manner that is reasonable under the circumstances. The financial institution remains subject to § 1002.107(c)(1) related to the time and manner of collecting applicant-provided data.

3. *Affiliate revenue.* As explained in comment 107(a)(14)–3, a financial institution is permitted, but not required, to report the gross annual revenue for the applicant that includes the revenue of affiliates as well. As explained in comment 107(a)(14)–1, pursuant to § 1002.107(b), if the financial institution verifies the gross annual revenue provided by the applicant, it must report the verified information. Likewise, a financial institution is permitted to rely on an applicant's representations regarding gross annual revenue (which may or may not include the affiliate's revenue) for purposes of determining small business status under § 1002.106(b). However, if the applicant provides updated gross annual revenue information (see comment 107(c)(1)–7), or the financial institution verifies the gross annual revenue information, the financial institution must use the updated or verified information in determining small business status.

*Section 1002.107—Compilation of Reportable Data*

*107(a) Data format and itemization.*

1. *General.* Section 1002.107(a) describes a covered financial institution's obligation to compile and maintain data regarding the covered applications it receives from small businesses.

i. A covered financial institution reports these data even if the credit originated pursuant to the reported application was subsequently sold by the institution.

ii. A covered financial institution annually reports data for covered applications for which final action was taken in the previous calendar year.

iii. A financial institution reports data for a covered application on its small business lending application register for the calendar year during which final action was taken on the application, even if the institution received the application in a previous calendar year.

2. *Filing Instructions Guide.* Additional details and procedures for compiling data pursuant to § 1002.107 are included in the *Filing Instructions Guide,* which is available at [a designated Bureau website].

*107(a)(1) Unique identifier.*

1. *Unique within the financial institution.* A financial institution complies with § 1002.107(a)(1) by compiling and reporting an alphanumeric application or loan identifier unique within the financial institution to the specific application. The identifier must not exceed 45 characters, and must begin with the financial institution's Legal Entity Identifier (LEI), as defined in comment 109(b)(6)–1. Separate applications for the same applicant must have separate identifiers. The identifier may only include standard numerical and/or alphabetical characters and cannot include dashes, other special characters, or characters with diacritics. The financial institution may assign the unique identifier at any time prior to reporting the application. Refinancings or applications for refinancing must be assigned a different identifier than the transaction that is being refinanced. A financial institution with multiple branches must ensure that its branches do not use the same identifiers to refer to multiple applications.

2. *Does not include directly identifying information.* The unique identifier must not include any directly identifying information about the applicant or persons (natural or legal) associated with the applicant. See also § 1002.111(c) and related commentary.

*107(a)(2) Application date.*

1. *Consistency.* Section 1002.107(a)(2) requires that, in reporting the date of covered application, a financial institution shall report the date it received the covered application, as defined under § 1002.103, or the date shown on a paper or electronic application form. Although a financial institution need not choose the same approach for its entire small business lending application register, it should generally be consistent in its approach by, for example, establishing procedures for how to report this date within particular scenarios, products, or divisions. If the financial institution chooses to report the date shown on an application form and the institution retains multiple versions of the application form, the institution reports the date shown on the first application form satisfying the application definition provided under § 1002.103.

2. *Indirect applications.* For an application that was not submitted directly to the financial institution or its affiliate (as described in § 1002.107(a)(4)), the institution may report the date the application was received by the party that initially received the application, the date the application was received by the financial institution, or the date shown on the application form. Although a financial institution need not choose the same approach for its entire small business lending application register, it should generally be consistent in its approach by, for example, establishing procedures for how to report this date within particular scenarios, products, or divisions.

*107(a)(3) Application method.*

1. *General.* A financial institution complies with § 1002.107(a)(3) by reporting the means by which the applicant submitted the application from one of the following options: In-person, telephone, online, or mail.

i. *In-person.* A financial institution reports the application method as ''in-person'' if the financial institution, or another party acting on the financial institution's behalf, meets with the applicant in person (for example, in a branch office, at the applicant's place of business, or via electronic media with a video component).

ii. *Telephone.* A financial institution reports the application method as ''telephone'' if the financial institution, or another party acting on the financial institution's behalf, did not meet with the applicant in person as described in comment 1002.107(a)(3)–1.i but communicated with the applicant by telephone or via audio-based electronic media without a video component.

iii. *Online.* A financial institution reports the application method as ''online'' if the financial institution, or another party acting on the financial institution's behalf, did not meet with the applicant in person and did not communicate with the applicant by telephone as described in comments 1002.107(a)(3)–1.i and ii, but communicated with the applicant through an online application, electronic mail, text message, and/or some other form of online communication.

iv. *Mail.* A financial institution reports the application method as ''mail'' if the financial institution, or another party acting on the financial institution's behalf, did not meet with the applicant in person and did not communicate with the applicant by telephone, as described in comments 1002.107(a)(3)–1.i and ii, but communicated with the applicant in writing via United States mail, courier or overnight service, or hand-delivery (including hand-delivery of documents via an overnight drop box or at a teller window).

2. *Reporting for interactions with applicants involving both mail and online.* If

a financial institution, or another party acting on the financial institution's behalf, communicated with the applicant both online as described in comment 1002.107(a)(3)–1.iii and by mail as described in 1002.107(a)(3)–1.iv, the financial institution reports the application method based on the method by which it, or another party acting on its behalf, requested the ethnicity, race, and sex of the applicant's principal owners pursuant to § 1002.107(a)(20). For example, if a financial institution requests the ethnicity, race, and sex information through an online form, it reports the application method as ''online.'' If the financial institution requests the ethnicity, race, and sex information via a paper form sent to the applicant by mail, it reports the application method as ''mail.'' If the financial institution requests the ethnicity, race, and sex information electronically online or via an electronic document that is emailed to the applicant, that the applicant then prints and returns to the financial institution by mail, the financial institution reports the application method as ''online'' (because that is the method by which the financial institution requested the ethnicity, race, and sex information).

*107(a)(4) Application recipient.*

1. *Agents.* If a financial institution is reporting actions taken by its agent consistent with comment 109(a)(3)–3, the agent is considered the financial institution for the purposes of § 1002.107(a)(4). For example, assume that an applicant submitted an application to Financial Institution A, and Financial Institution A made the credit decision acting as Financial Institution B's agent under State law. Financial Institution B reports the origination and indicates that the application was submitted directly to Financial Institution B.

*107(a)(5) Credit type.*

1. *Reporting credit product—in general.* A financial institution complies with § 1002.107(a)(5)(i) by selecting the credit product requested from the list below. If an applicant requests more than one credit product, the financial institution reports each credit product requested as a separate application. If the credit product requested or originated is not included on this list, the financial institution selects ''other,'' and reports the credit specific product as free-form text.

i. Term loan—unsecured.
ii. Term loan—secured.
iii. Line of credit—unsecured.
iv. Line of credit—secured.
v. Credit card.
vi. Merchant cash advance.
vii. Other sales-based financing transaction.
viii. Other.
ix. Not provided by applicant and otherwise undetermined.

2. *Credit product not provided by the applicant and otherwise undetermined.* Pursuant to § 1002.107(c)(1), a financial institution is required to maintain procedures reasonably designed to collect applicant-provided data, which includes credit product. However, if a financial institution is nonetheless unable to collect or otherwise determine credit product information because the applicant does not indicate what credit product it seeks and the application is denied, withdrawn, or closed for incompleteness before a credit product is identified, the financial institution reports that the credit product is ''not provided by applicant and otherwise undetermined.''

3. *Reporting credit product involving counteroffers.* If a financial institution presents a counteroffer for a different credit product than the product the applicant had initially requested, and the applicant does not agree to proceed with the counteroffer, the financial institution reports the application for the original credit product as denied pursuant to § 1002.107(a)(9). If the applicant agrees to proceed with consideration of the financial institution's counteroffer, the financial institution reports the disposition of the application based on the credit product that was offered and does not report the original credit product applied for. See comment 107(a)(9)–2.

4. *Guarantees.* A financial institution complies with § 1002.107(a)(5)(ii) by selecting the type or types of guarantees that were obtained for an originated covered credit transaction, or that would have been obtained if the covered credit transaction was originated, from the list below. The financial institution selects, if applicable, up to a maximum of five guarantees for a single application or transaction. If the type of guarantee does not appear on the list, the financial institution selects ''other guarantee'' and reports the type of guarantee as free-form text. If no guarantee is obtained or would have been obtained if the covered credit transaction was originated, the financial institution selects ''no guarantee.''

i. Personal guarantee—owner(s).
ii. Personal guarantee—non-owner(s).
iii. SBA guarantee—7(a) program.
iv. SBA guarantee—504 program.
v. SBA guarantee—other.
vi. USDA guarantee.
vii. FHA insurance.
viii. Bureau of Indian Affairs guarantee
ix. Other Federal guarantee.
x. State or local government guarantee.
xi. Other guarantee.
xii. No guarantee.

5. *Loan term.* A financial institution complies with § 1002.107(a)(5)(iii) by reporting the number of months in the loan term for the covered credit transaction. The loan term is the number of months after which the legal obligation will mature or terminate. The financial institution does not include in the loan term the time that elapses, if any, between the settlement of the transaction and the first payment period. For example, if a loan closes on April 12, but the first payment is not due until June 1 and includes the interest accrued in May (but not April), the financial institution does not include the month of April in the loan term. The financial institution may round the loan term to the nearest full month or may count only full months and ignore partial months, as it so chooses. If a credit product, such as a credit card, does not have a loan term, the financial institution reports that the loan term is ''not applicable.'' The financial institution also reports ''not applicable'' if the application is denied, withdrawn, or determined to be incomplete before a loan term has been identified.

6. *Other sales-based financing transaction.* For an extension of business credit incident to a factoring arrangement that is otherwise a covered credit transaction, a financial institution selects ''other sales-based financing transaction'' as the credit product. See comment 104(b)–1.

*107(a)(6) Credit purpose.*

1. *General.* A financial institution complies with § 1002.107(a)(6) by selecting the purpose or purposes of the covered credit transaction applied for or originated from the list below.

i. Purchase, construction/improvement, or refinance of owner-occupied dwelling(s).
ii. Purchase, construction/improvement, or refinance of non-owner-occupied dwelling(s).
iii. Purchase, construction/improvement, or refinance of non-owner-occupied, non-dwelling real estate.
iv. Purchase, construction/improvement, or refinance of owner-occupied, non-dwelling real estate.
v. Purchase, refinance, or rehabilitation/repair of motor vehicle(s) (including light and heavy trucks).
vi. Purchase, refinance, or rehabilitation/repair of equipment.
vii. Working capital (includes inventory or floor planning).
viii. Business start-up.
ix. Business expansion.
x. Business acquisition.
xi. Refinance existing debt (other than refinancings listed above).
xii. Line increase.
xiii. Other.
xiv. Not provided by applicant and otherwise undetermined.
xv. Not applicable.

2. *More than one purpose.* If the applicant indicates or the financial institution is otherwise aware of more than one purpose for the credit applied for or originated, the financial institution reports those purposes, up to a maximum of three, using the list provided, in any order it chooses. For example, if an applicant refinances a non-dwelling commercial building it owns and uses the funds to purchase a motor vehicle and expand the business it runs in a part of that building, the financial institution reports that the three purposes of the credit are purchase, construction/improvement, or refinance of owner-occupied, non-dwelling real estate; purchase, refinance, or rehabilitation/repair of motor vehicle(s) (including light and heavy trucks); and business expansion. If an application has more than three purposes, the financial institution reports any three of those purposes. In the example above, if the funds were also used to purchase equipment, the financial institution would select only three of the relevant purposes to report.

3. ''*Other*'' *credit purpose.* If a purpose of an application does not appear on the list of purposes provided, the financial institution reports ''other'' as the credit purpose and reports the credit purpose as free-form text. If the application has more than one ''other'' purpose, the financial institution chooses the most significant ''other'' purpose, in its discretion, and reports that ''other'' purpose.

The financial institution reports a maximum of three credit purposes, including any ''other'' purpose reported.

4. *Credit purpose not provided by applicant and otherwise undetermined.* Pursuant to § 1002.107(c)(1), a financial institution shall maintain procedures reasonably designed to collect applicant-provided information, which includes credit purpose. However, if a financial institution is nonetheless unable to collect or determine credit purpose information, the financial institution reports that the credit purpose is ''not provided by applicant and otherwise undetermined.''

5. *Not applicable.* If the application is for a credit product that generally has indeterminate or numerous potential purposes, such as a credit card, the financial institution may report credit purpose as ''not applicable.''

6. *Excluded dwellings.* As explained in comment 104(b)–4, subpart B of this part does not apply to an extension of credit that is secured by 1–4 individual dwelling units that the applicant or one or more of the applicant's principal owners does not, or will not, occupy.

7. *Collecting credit purpose.* Pursuant to § 1002.107(c)(1), a financial institution shall maintain procedures reasonably designed to collect applicant-provided information, including credit purpose. The financial institution is permitted, but not required, to present the list of credit purposes provided in comment 107(a)(6)–1 to the applicant. The financial institution is also permitted to ask about purposes not included on the list provided in comment 107(a)(6)–1. If the applicant chooses a purpose or purposes not included on the provided list, the financial institution follows the instructions in comment 107(a)(6)–3 regarding reporting of ''other'' as the credit purpose. If an applicant chooses a purpose or purposes that are similar to purposes on the list provided, but uses different language, the financial institution reports the purpose or purposes from the list provided.

*107(a)(7) Amount applied for.*

1. *Initial amount requested.* A financial institution complies with § 1002.107(a)(7) by reporting the initial amount of credit or the credit limit initially requested by the applicant. The financial institution is not required to report credit amounts or limits discussed before an application is made, but must capture the amount initially requested at the application stage or later. If the applicant does not request a specific amount, but the financial institution underwrites the application for a specific amount, the financial institution reports the amount considered for underwriting as the amount applied for. If the applicant requests an amount as a range of numbers, the financial institution reports the midpoint of that range.

2. *No amount requested.* Pursuant to § 1002.107(c)(1), a financial institution shall maintain procedures reasonably designed to collect applicant-provided information, which includes the credit amount initially requested by the applicant. However, if a financial institution is nonetheless unable to collect or otherwise determine the amount initially requested, the financial institution reports that the amount applied for is ''not provided by applicant and otherwise undetermined.'' If the particular product applied for does not involve a specific amount requested or underwritten, the financial institution reports that the requirement is ''not applicable.''

3. *Firm offers.* When an applicant responds to a ''firm offer'' that specifies an amount or limit, which may occur in conjunction with a pre-approved credit solicitation, the financial institution reports the amount applied for as the amount of the firm offer, unless the applicant requests a different amount. If the firm offer does not specify an amount or limit and the applicant does not request a specific amount, the amount applied for is the amount underwritten by the financial institution.

4. *Additional amounts on an existing account.* When reporting a covered application that seeks additional credit amounts on an existing account, the financial institution reports only the additional credit amount sought, and not any previous amounts extended. See comment 103(b)–3.

*107(a)(8) Amount approved or originated.*

1. *General.* A financial institution complies with § 1002.107(a)(8) by reporting the amount approved or originated for credit that is originated or approved but not accepted. For applications that the financial institution, pursuant to § 1002.107(a)(9), reports as denied, withdrawn by the applicant, or incomplete, the financial institution reports that the amount approved or originated is ''not applicable.''

2. *Multiple approval amounts.* A financial institution may sometimes approve an applicant for more than one credit amount, allowing the applicant to choose which amount the applicant prefers for the extension or line of credit. When multiple approval amounts are offered for a closed-end credit transaction for which the action taken is approved but not accepted, and the applicant does not accept the approved offer of credit in any amount, the financial institution reports the highest amount approved. If the applicant accepts the offer of closed-end credit, the financial institution reports the amount originated. When multiple approval amounts are offered for an open-end credit transaction for which the action taken is approved but not accepted, and the applicant does not accept the approved offer of credit in any amount, the financial institution reports the highest amount approved. If the applicant accepts the offer of open-end credit, the financial institution reports the actual credit limit established.

3. *Amount approved or originated—closed-end credit transaction.* For an originated closed-end credit transaction, the financial institution reports the principal amount to be repaid. This amount will generally be disclosed on the legal obligation.

4. *Amount approved or originated—refinancing.* For a refinancing, the financial institution reports the amount of credit approved or originated under the terms of the new debt obligation.

5. *Amount approved or originated—counteroffer.* If an applicant agrees to proceed with consideration of a counteroffer for an amount or limit different from the amount for which the applicant applied, and the covered credit transaction is approved and originated, the financial institution reports the amount granted. If an applicant does not agree to proceed with consideration of a counteroffer or fails to respond, the institution reports the application as denied and reports ''not applicable'' for the amount approved or originated. See comment 107(a)(9)–2.

*107(a)(9) Action taken.*

1. *General.* A financial institution complies with § 1002.107(a)(9) by selecting the action taken by the financial institution on the application from the following list: originated, approved but not accepted, denied, withdrawn by the applicant, or incomplete. A financial institution identifies the applicable action taken code based on final action taken on the covered application.

i. *Originated.* A financial institution reports that the covered credit transaction was originated if the financial institution made a credit decision approving the application and that credit decision results in an extension of credit.

ii. *Approved but not accepted.* A financial institution reports an application as approved but not accepted if the financial institution made a credit decision approving the application, but the applicant or the party that initially received the application fails to respond to the financial institution's approval within the specified time, or the covered credit transaction was not otherwise consummated or the account was not otherwise opened.

iii. *Denied.* A financial institution reports that the application was denied if it made a credit decision denying the application before an applicant withdraws the application, before the file is closed for incompleteness, or before the application is denied for incompleteness.

iv. *Withdrawn by the applicant.* A financial institution reports that the application was withdrawn if the application is expressly withdrawn by the applicant before the financial institution makes a credit decision approving or denying the application, before the file is closed for incompleteness, or before the application is denied for incompleteness.

v. *Incomplete.* A financial institution reports incomplete if the financial institution took adverse action on the basis of incompleteness under § 1002.9(c)(1)(i) or provided a written notice of incompleteness under § 1002.9(c)(2), and the applicant did not respond to the request for additional information within the period of time specified in the notice.

2. *Treatment of counteroffers.* If a financial institution makes a counteroffer to grant credit on terms other than those originally requested by the applicant (for example, for a shorter loan maturity, with a different interest rate, or in a different amount) and the applicant declines the counteroffer or fails to respond, the institution reports the action taken as a denial on the original terms requested by the applicant. If the applicant agrees to proceed with consideration of the financial institution's counteroffer, the financial institution reports the action taken

as the disposition of the application based on the terms of the counteroffer. For example, assume an applicant applies for a term loan and the financial institution makes a counteroffer to proceed with consideration of a line of credit. If the applicant declines to be considered for a line of credit, the financial institution reports the application as a denied request for a term loan. If, on the other hand, the applicant agrees to be considered for a line of credit, then the financial institution reports the action taken as the disposition of the application for the line of credit. For instance, using the same example, if the financial institution makes a credit decision approving the line of credit, but the applicant fails to respond to the financial institution's approval within the specified time by accepting the credit offer, the financial institution reports the application on the line of credit as approved but not accepted.

3. *Treatment of rescinded transactions.* If a borrower successfully rescinds a transaction after closing but before a financial institution is required to submit its small business lending application register containing the information for the application under § 1002.109, the institution reports the application as approved but not accepted.

4. *Treatment of pending applications.* A financial institution does not report any application still pending at the end of the calendar year; it reports such applications on its small business lending application register for the year in which final action is taken.

5. *Treatment of conditional approvals.* If a financial institution issues an approval that is subject to the applicant meeting certain conditions, the financial institution reports the action taken as provided below dependent on whether the conditions are solely customary commitment or closing conditions or if the conditions include any underwriting or creditworthiness conditions. Customary commitment or closing conditions include, for example, a clear-title requirement, proof of insurance policies, a subordination agreement from another lienholder, or property titling of associated accounts. Underwriting or creditworthiness conditions include, for example, conditions that constitute a counteroffer (such as a demand for a higher down-payment), satisfactory loan-to-value ratios, or verification or confirmation, in whatever form the institution requires, that the applicant meets underwriting conditions concerning applicant creditworthiness, including documentation or verification of revenue, income or assets.

i. *Conditional approval—denial.* If the approval is conditioned on satisfying underwriting or creditworthiness conditions, those conditions are not met, and the financial institution takes adverse action on some basis other than incompleteness, the financial institution reports the action taken as denied.

ii. *Conditional approval—incompleteness.* If the approval is conditioned on satisfying underwriting or creditworthiness conditions that the financial institution needs to make the credit decision, and the financial institution takes adverse action on the basis of incompleteness under § 1002.9(c)(1)(i), or has sent a written notice of incompleteness under § 1002.9(c)(2) and the applicant did not respond within the period of time specified in the notice, the financial institution reports the action taken as incomplete.

iii. *Conditional approval—approved but not accepted.* If the approval is conditioned on satisfying conditions that are solely customary commitment or closing conditions and the conditions are not met, the financial institution reports the action taken as approved but not accepted. If all the conditions (underwriting, creditworthiness, or customary commitment or closing conditions) are satisfied and the financial institution agrees to extend credit but the covered credit transaction is not originated (for example, because the applicant withdraws), the financial institution reports the action taken as approved but not accepted.

iv. *Conditional approval—withdrawn by the applicant.* If the applicant expressly withdraws before satisfying all underwriting or creditworthiness conditions and before the institution denies the application or before the institution closes the file for incompleteness, the financial institution reports the action taken as withdrawn.

*107(a)(10) Action taken date.*

1. *Reporting action taken date for denied applications.* For applications that are denied, a financial institution reports either the date the application was denied or the date the denial notice was sent to the applicant.

2. *Reporting action taken date for applications withdrawn by applicant.* For applications that are withdrawn by the applicant, the financial institution reports the date the express withdrawal was received, or the date shown on the notification form in the case of a written withdrawal.

3. *Reporting action taken date for applications that are approved but not accepted.* For applications approved by a financial institution but not accepted by the applicant, the financial institution reports any reasonable date, such as the approval date, the deadline for accepting the offer, or the date the file was closed. A financial institution should generally be consistent in its approach to reporting by, for example, establishing procedures for how to report this date for particular scenarios, products, or divisions.

4. *Reporting action taken date for originated covered credit transactions.* For covered credit transactions that are originated, a financial institution generally reports the closing or account opening date. If the disbursement of funds takes place on a date later than the closing or account opening date, the institution may, alternatively, use the date of initial disbursement. A financial institution should generally be consistent in its approach to reporting by, for example, establishing procedures for how to report this date in different scenarios, products, or divisions.

5. *Reporting action taken date for incomplete applications.* For files closed for incompleteness or denied for incompleteness, the financial institution reports either the date the action was taken or the date the denial or incompleteness notice was sent to the applicant.

*107(a)(11) Denial reasons.*

1. *Reason for denial—in general.* A financial institution complies with § 1002.107(a)(11) by reporting the principal reason or reasons it denied the application, indicating up to four reasons. The financial institution reports only the principal reason or reasons it denied the application, even if there are fewer than four reasons. For example, if a financial institution denies an application due to insufficient cashflow, unacceptable collateral, and unverifiable business information, the financial institution is required to report these three reasons. The reasons reported must accurately describe the principal reason or reasons the financial institution denied the application. A financial institution reports denial reasons by selecting its principal reason or reasons for denying the application from the following list:

i. *Credit characteristics of the business.* A financial institution reports the denial reason as ''credit characteristics of the business'' if it denies the application based on an assessment of the business's ability to meet its current or future credit obligations. Examples include business credit score, history of business bankruptcy or delinquency, and/or a high number of recent business credit inquiries.

ii. *Credit characteristics of the principal owner(s) or guarantor(s).* A financial institution reports the denial reason as ''credit characteristics of the principal owner(s) or guarantor(s)'' if it denies the application based on an assessment of the principal owner(s) or guarantor(s)'s ability to meet its current or future credit obligations. Examples include principal owner(s) or guarantor(s)'s credit score, history of charge offs, bankruptcy or delinquency, low net worth, limited or insufficient credit history, or history of excessive overdraft.

iii. *Use of loan proceeds.* A financial institution reports the denial reason as ''use of loan proceeds'' if it denies an application because, as a matter of policy or practice, it limits lending to certain kinds of businesses, particular product lines within a business class, or certain industries it has identified as high risk. For example, if an application for credit to establish a cannabis dispensary is denied by a financial institution because it has classified all cannabis-related business as ''high risk,'' the financial institution reports the reason for denial as ''use of loan proceeds.''

iv. *Cashflow.* A financial institution reports the denial reason as ''cashflow'' when it denies an application due to insufficient or inconsistent cashflow.

v. *Collateral.* A financial institution reports the denial reason as ''collateral'' when it denies an application due to insufficient, inappropriate, or unacceptable collateral.

vi. *Time in business.* A financial institution reports the denial reason as ''time in business'' when it denies an application due to insufficient time or experience in a line of business. For example, a credit applicant establishes a business and applies for credit

five months later. The financial institution may determine that the applicant has insufficient experience in the business under the institution's underwriting standards and deny the application.

vii. *Government criteria.* Certain loan programs are backed by government agencies that have specific eligibility requirements. When those requirements are not met by an applicant, and the financial institution denies the application, the financial institution reports the denial reason as ''government criteria.'' For example, if an applicant cannot meet a government-guaranteed loan program's requirement to provide a guarantor or proof of insurance, the financial institution reports the reason for the denial as ''government criteria.''

viii. *Aggregate exposure.* Aggregate exposure is a measure of the total exposure or level of indebtedness of the business and its principal owner(s) associated with an application. A financial institution reports the denial reason as ''aggregate exposure'' where the total debt associated with the application is deemed high or exceeds certain debt thresholds set by the financial institution. For example, if an application for unsecured credit exceeds the maximum amount a financial institution is permitted to approve per applicant, as stated in its credit guidelines, and the financial institution denies the application for this reason, the financial institution reports the reason for denial as ''aggregate exposure.''

ix. *Unverifiable information.* A financial institution reports the denial reason as ''unverifiable information'' when it is unable to verify information on an application, and denies the application for that reason. The unverifiable information must be necessary for the financial institution to make a credit decision based on its procedures for the type of credit requested. Examples include unverifiable assets or collateral, unavailable business credit report, and unverifiable business ownership composition.

x. *Other.* A financial institution reports the denial reason as ''other'' where none of the enumerated denial reasons adequately describe the principal reason or reasons it denied the application, and the institution reports the denial reason or reasons as free-form text.

2. *Reason for denial—not applicable.* A financial institution complies with § 1002.107(a)(11) by reporting that the requirement is not applicable if the action taken on the application, pursuant to § 1002.107(a)(9), is not a denial. For example, if the application resulted in an originated covered credit transaction, or the application was approved but not accepted, the financial institution complies with § 1002.107(a)(11) by reporting not applicable.

*107(a)(12) Pricing information.*

1. *General.* For applications that a financial institution, pursuant to § 1002.107(a)(9), reports as denied, withdrawn by the applicant, or incomplete, the financial institution reports that pricing information is ''not applicable.''

*107(a)(12)(i) Interest rate.*

1. *Interest rate—introductory period.* If a covered credit transaction includes an initial period with an introductory interest rate, after which the interest rate adjusts upwards or shifts from a fixed to variable rate, a financial institution complies with § 1002.107(a)(12)(i) by reporting information about the interest rate applicable after the introductory period. For example, if a financial institution originates a covered credit transaction with a fixed, initial interest rate of 0 percent for six months following origination, after which the interest rate will adjust according to a Prime index rate plus a 3 percent margin, the financial institution reports the 3 percent margin, Prime's value, and Prime as the name of the index used to adjust the interest rate.

2. *Multiple interest rates.* If a covered credit transaction includes multiple interest rates applicable to different credit features, a financial institution complies with § 1002.107(a)(12)(i) by reporting the interest rate applicable to the amount of credit approved or originated reported in § 1002.107(a)(8). For example, if a financial institution originates a credit card with different interest rates for purchases, balance transfers, cash advances, and overdraft advances, the financial institution reports the interest rate applicable for purchases.

3. *Index names.* A financial institution complies with § 1002.107(a)(12)(i) by selecting the index used from the following list: Wall Street Journal Prime, 6-month CD rate, 1-year T-Bill, 3-year T-Bill, 5-year T-Note, 12-month average of 10-year T-Bill, Cost of Funds Index (COFI)-National, Cost of Funds Index (COFI)-11th District. If the index used does not appear on the list of indices provided, the financial institution reports ''other'' and provides the name of the index via free-form text.

4. *Index value.* For covered transactions with an adjustable interest rate, a financial institution complies with § 1002.107(a)(12)(i)(B) by reporting the index value that is applicable at the time the application was approved by the financial institution. For covered credit transactions that include an initial period with an introductory interest rate, after which the interest rate adjusts upwards or shifts from a fixed to variable rate, a financial institution complies with § 1002.107(a)(12)(i)(B) by reporting the index value applicable at the time the application was approved by the financial institution of the rate in effect after the introductory interest rate is complete.

*107(a)(12)(ii) Total origination charges.*

1. *Charges in comparable cash transactions.* Charges imposed uniformly in cash and credit transactions are not reportable under § 1002.107(a)(12)(ii). In determining whether an item is part of the total origination charges, a financial institution should compare the covered credit transaction in question with a similar cash transaction. A financial institution financing the sale of property or services may compare charges with those payable in a similar cash transaction by the seller of the property or service.

2. *Charges by third parties.* A financial institution includes fees and amounts charged by someone other than the financial institution in the total charges reported if the financial institution:

i. Requires the use of a third party as a condition of or an incident to the extension of credit, even if the applicant can choose the third party; or

ii. Retains a portion of the third-party charge, to the extent of the portion retained.

3. *Special rule; broker fees.* A financial institution complies with § 1002.107(a)(12)(ii) by including fees charged by a broker (including fees paid by the applicant directly to the broker or to the financial institution for delivery to the broker) in the total origination charges reported even if the financial institution does not require the applicant to use a broker and even if the financial institution does not retain any portion of the charge. For more information on broker fees, see commentary for § 1002.107(a)(12)(iii).

4. *Bundled services.* Total origination charges include all charges imposed directly or indirectly by the financial institution at or before origination as an incident to or a condition of the extension of credit. Accordingly, a financial institution complies with § 1002.107(a)(12)(ii) by including charges for other products or services paid at or before origination in the total origination charges reported if the financial institution requires the purchase of such other product or service as a condition of or an incident to the extension of credit.

5. *Origination charges—examples.* Examples of origination charges may include application fees, credit report fees, points, appraisal fees, and other similar charges.

*107(a)(12)(iii) Broker fees.*

1. *Amount.* A financial institution complies with § 1002.107(a)(12)(iii) by including the fees reported in § 1002.107(a)(12)(ii) that are fees paid by the applicant directly to the broker or to the financial institution for delivery to the broker. For example, a covered transaction has $3000 of total origination charges. Of that $3000, $250 are fees paid by the applicant directly to a broker and an additional $300 are fees paid to the financial institution for delivery to the broker. The financial institution complies with § 1002.107(a)(12)(iii) by reporting $550 in the broker fees reported.

2. *Fees paid directly to a broker by an applicant.* A financial institution complies with § 1002.107(a)(12)(iii) by relying on the best information readily available to the financial institution at the time final action is taken. Information readily available could include, for example, information provided by an applicant or broker that the financial institution reasonably believes regarding the amount of fees paid by the applicant directly to the broker.

*107(a)(12)(iv) Initial annual charges.*

1. *Charges during the initial annual period.* The total initial annual charges include all charges scheduled to be imposed during the initial annual period following origination. For example, if a financial institution originates a covered credit transaction with a $50 monthly fee and a $100 annual fee, the financial institution complies with § 1002.107(a)(12)(iv) by reporting $700 in the initial annual charges reported.

2. *Interest excluded.* A financial institution complies with § 1002.107(a)(12)(iv) by excluding any interest expense from the initial annual charges reported.

3. *Avoidable charges.* A financial institution complies with § 1002.107(a)(12)(iv) by only including scheduled charges and excluding any charges for events that are avoidable by the applicant from the initial annual charges reported. Examples of avoidable charges include charges for late payment, for exceeding a credit limit, for delinquency or default, or for paying items that overdraw an account.

4. *Initial annual charges—examples.* Examples of charges scheduled to be imposed during the initial annual period may include monthly fees, annual fees, and other similar charges.

5. *Scheduled charges with variable amounts.* A financial institution complies with § 1002.107(a)(12)(iv) by reporting as the default the highest amount for a charge scheduled to be imposed. For example, if a covered credit transaction has a $75 monthly fee, but the fee is reduced to $0 if the applicant maintains an account at the financial institution originating the covered credit transaction, the financial institution complies with § 1002.107(a)(12)(iv) by reporting $900 ($75×12) in the initial annual charges reported.

*107(a)(12)(v) Additional cost for merchant cash advances or other sales-based financing.*

1. *Merchant cash advances.* Section 1002.107(a)(12)(v) requires a financial institution to report the difference between the amount advanced and the amount to be repaid for a merchant cash advance or other sales-based financing transaction. For example, in a merchant cash advance, a financial institution reports the difference between the purchase price and the amount to be repaid, using the amounts provided in the contract between the financial institution and the applicant.

*107(a)(12)(vi) Prepayment penalties.*

1. *Policies and procedures applicable to the covered credit transaction.* The policies and procedures applicable to the covered credit transaction include the practices that the financial institution follows when evaluating applications for the specific credit type and credit purpose requested. For example, assume that a financial institution's written procedures permit it to include prepayment penalties in the loan agreement for its term loans secured by non-owner occupied commercial real estate. For such transactions, the financial institution includes prepayment penalties in some loan agreements but not others. For an application for, or origination of, a term loan secured by non-owner occupied commercial real estate, the financial institution reports under § 1002.107(12)(vi)(A) that a prepayment penalty could have been included under the policies and procedures applicable to the transaction, regardless of whether the term loan secured by non-owner occupied commercial real estate actually includes a prepayment penalty.

*107(a)(13) Census tract.*

1. *General.* A financial institution complies with § 1002.107(a)(13) by reporting a census tract number as defined by the U.S. Census Bureau, which includes State and county numerical codes. A financial institution complies with § 1002.107(a)(13) if it uses the boundaries and codes in effect on January 1 of the calendar year covered by the small business lending application register that it is reporting. The financial institution reports census tract based on the following:

i. *Proceeds address.* A financial institution complies with § 1002.107(a)(13) by reporting a census tract based on the address or location where the proceeds of the credit applied for or originated will be or would have been principally applied, if known. For example, a financial institution would report a census tract based on the address or location of the site where the proceeds of a construction loan will be applied.

ii. *Main office or headquarters address.* If the address or location where the proceeds of the credit applied for or originated is unknown, a financial institution complies with § 1002.107(a)(13) by reporting a census tract number based on the address or location of the main office or headquarters of the applicant, if known. For example, the address or location of the main office or headquarters of the applicant may be the home address of a sole proprietor or the office address of a sole proprietor or other applicant.

iii. *Another address or location.* If neither the address or location where the proceeds of the credit applied for or originated will be or would have been principally applied nor the address or location of the main office or headquarters of the applicant are known, a financial institution complies with § 1002.107(a)(13) by reporting a census tract number based on another address or location associated with the applicant.

iv. *Type of address used.* In addition to reporting the census tract, pursuant to § 1002.107(a)(13)(iv) a financial institution must report which one of the three types of addresses or locations listed in § 1002.107(a)(13)(i) through (iii) and described in comments 107(a)(13)–1.i through iii that the census tract is determined from.

2. *Financial institution discretion.* A financial institution complies with § 1002.107(a)(13) by identifying the appropriate address or location and the type of that address or location in good faith, using appropriate information from the applicant's credit file or otherwise known by the financial institution. A financial institution is not required to make inquiries beyond its standard procedures as to the nature of the addresses or locations it collects.

3. *Address or location not provided by applicant and otherwise undetermined.* Pursuant to § 1002.107(c)(1), a financial institution shall maintain procedures reasonably designed to collect applicant-provided information, which includes at least one address or location for an applicant for census tract reporting. However, if a financial institution is nonetheless unable to collect or otherwise determine any address or location for an application, the financial institution reports that the census tract information is ''not provided by applicant and otherwise undetermined.''

4. *Safe harbor.* As described in § 1002.112(c)(1) and comment 112(c)(1)–1, a financial institution that obtains an incorrect census tract by correctly using a geocoding tool provided by the FFIEC or the Bureau does not violate the Act or subpart B of this part.

*107(a)(14) Gross annual revenue.*

1. *Collecting gross annual revenue.* A financial institution may rely on statements of or information provided by the applicant in collecting and reporting gross annual revenue. However, pursuant to § 1002.107(b), if the financial institution verifies the gross annual revenue provided by the applicant, it must report the verified information. The financial institution may use the following language to ask about gross annual revenue, if it does not collect gross annual revenue by another method, and may rely on the applicant's answer:

*What was the gross annual revenue of the business applying for credit in its last full fiscal year? Gross annual revenue is the amount of money the business earned before subtracting taxes and other expenses. You may provide gross annual revenue calculated using any reasonable method.*

2. *Gross annual revenue not provided by applicant and otherwise undetermined.* Pursuant to § 1002.107(c)(1), a financial institution shall maintain procedures reasonably designed to collect applicant-provided information, which includes the gross annual revenue of the applicant. However, if a financial institution is nonetheless unable to collect or determine the gross annual revenue of the applicant, the financial institution reports that the gross annual revenue is ''not provided by applicant and otherwise undetermined.''

3. *Affiliate revenue.* A financial institution is permitted, but not required, to report the gross annual revenue for the applicant that includes the revenue of affiliates as well. For example, if the financial institution does not normally collect information on affiliate revenue, the financial institution reports only the applicant's revenue and does not include the revenue of any affiliates when it has not collected that information. Similarly, in determining whether the applicant is a small business under § 1002.106(b), a financial institution may rely on an applicant's representations regarding gross annual revenue, which may or may not include the affiliate's revenue.

*107(a)(15) NAICS code.*

1. *General.* NAICS stands for North American Industry Classification System. The Office of Management and Budget has charged the Economic Classification Policy Committee with the maintenance and review of NAICS. A financial institution complies with § 1002.107(a)(15) if it uses the NAICS codes in effect on January 1 of the calendar year covered by the small business lending application register that it is reporting.

2. *NAICS not provided by applicant and otherwise undetermined.* Pursuant to § 1002.107(c)(1), a financial institution shall maintain procedures reasonably designed to collect applicant-provided information, which includes NAICS code. However, if a financial institution is nonetheless unable to collect or otherwise determine the applicant's NAICS code, the financial institution reports that the NAICS code is ''not provided by applicant and otherwise undetermined.''

3. *Reliance on statements by applicant.* Consistent with § 1002.107(b), a financial institution may rely on statements of or information provided by the applicant in collecting and reporting the NAICS code. For example, a financial institution may rely on the NAICS code on an applicant's tax return that the applicant has otherwise provided to the financial institution.

4. *Reliance on other information.* A financial institution may rely on a NAICS code obtained through the financial institution's use of business information products, such as company profiles or business credit reports, which provide the applicant's NAICS code.

5. *Safe harbor.* A financial institution that identifies an incorrect NAICS code does not violate the Act or subpart B of this part under the circumstances described in § 1002.112(c)(2).

*107(a)(16) Number of workers.*

1. *Collecting number of workers.* In collecting the number of workers from an applicant, a financial institution shall explain that full-time, part-time and seasonal employees, as well as contractors who work primarily for the applicant, would be counted as workers, but principal owners of the business would not. If asked, the financial institution shall explain that volunteers would not be counted as workers, and workers for affiliates of the applicant would only be counted if the financial institution were also collecting the affiliates' gross annual revenue. The financial institution may rely on statements of or information provided by the applicant in collecting and reporting number of workers. However, pursuant to § 1002.107(b), if the financial institution verifies the number of workers provided by the applicant, it must report the verified information. The financial institution may use the following language to ask about the number of workers, if it does not collect the number of workers by another method, and may rely on the applicant's answer:

*Counting full-time, part-time and seasonal workers, as well as contractors who work primarily for the business applying for credit, but not counting principal owners of the business, how many people work for the business applying for credit?*

2. *Number of workers not provided by applicant and otherwise undetermined.* Pursuant to § 1002.107(c)(1), a financial institution shall maintain procedures reasonably designed to collect applicant-provided information, which includes the number of workers of the applicant. However, if a financial institution is nonetheless unable to collect or determine the number of workers of the applicant, the financial institution reports that the number of workers is ''not provided by applicant and otherwise undetermined.''

*107(a)(17) Time in business.*

1. *As relied on or collected.* A financial institution complies with § 1002.107(a)(17) by reporting the time the applicant has been in business as relied on in making the credit decision or collected by the financial institution. The financial institution must report the time in business in whole years and indicate if a business has not begun operating yet or has been in operation for less than a year. When the financial institution relies on an applicant's time in business as part of a credit decision, it reports the time in business relied on in making the credit decision. (See comments 107(a)(17)–2 and –3 below regarding reporting of the time in business relied on.) However, § 1002.107(a)(17) does not require the financial institution to rely on an applicant's time in business in making a credit decision. The financial institution may rely on statements of or information provided by the applicant in collecting and reporting time in business. However, pursuant to § 1002.107(b), if the financial institution verifies the time in business provided by the applicant, it must report the verified information.

2. *Time in business relied on.* When a financial institution evaluates an applicant's time in business as part of a credit decision, it reports the time in business relied on in making the credit decision. For example, if the financial institution relies on the number of years of experience the applicant's owners have in the current line of business, the financial institution reports that number of years as the time in business. Similarly, if the financial institution relies on the number of years that the applicant has existed, the financial institution reports the number of years that the applicant has existed as the time in business. The financial institution reports the length of business existence or experience duration that it relies on in making its credit decision, and is not required to adopt any particular definition of time in business.

3. *Multiple factors considered.* A financial institution relies on an applicant's time in business in making a credit decision if the time in business was a factor in the credit decision, even if it was not a dispositive factor. For example, if the time in business is one of multiple factors in the financial institution's credit decision, the financial institution has relied on the time in business even if the financial institution denies the application because one or more underwriting requirements other than the time in business are not satisfied.

4. *Collecting time in business.* If the financial institution does not rely on time in business in considering an application, pursuant to § 1002.107(c)(1) it shall still maintain procedures reasonably designed to collect applicant-provided information, which includes the applicant's time in business. In collecting time in business from an applicant, the financial institution complies with § 1002.107(a)(17) by asking for the number of years that the applicant has been operating the business it operates now. When the applicant has multiple owners with different numbers of years operating that business, the financial institution collects and reports the greatest number of years of any owner. (However, the financial institution does not need to comply with this instruction if it collects and relies on the time in business by another method in making the credit decision.)

5. *Time in business not provided by applicant and otherwise undetermined.* Pursuant to § 1002.107(c)(1), a financial institution shall maintain procedures reasonably designed to collect applicant-provided information, which includes the time in business of the applicant. However, if a financial institution is nonetheless unable to collect or determine the time in business of the applicant, the financial institution reports that the time in business is ''not provided by applicant and otherwise undetermined.''

*107(a)(18) Minority-owned business status.*

1. *General.* Unless a financial institution is permitted to report minority-owned business status based on previously collected data pursuant to § 1002.107(c)(2), a financial institution must ask an applicant whether it is a minority-owned business for each covered application. The financial institution must permit an applicant to refuse to answer the financial institution's inquiry and must inform the applicant that the applicant is not required to provide the information. The financial institution must report the applicant's response, its refusal to answer the inquiry (such as when the applicant indicates that it does not wish to provide the requested information), or its failure to respond to the inquiry (such as when the applicant fails to submit a data collection form). See appendix F for additional instructions on collecting and reporting minority-owned business status.

2. *Notice of non-discrimination.* When requesting minority-owned business status from an applicant, a financial institution must inform the applicant that the financial institution cannot discriminate on the basis of the applicant's minority-owned business status, or on whether the applicant provides its minority-owned business status. A financial institution may combine this non-discrimination notice regarding minority-owned business status with the similar non-discrimination notices that a financial institution is required to provide when requesting women-owned business status and a principal owner's ethnicity, race, and sex if a financial institution requests minority-owned business status, women-owned business status, and/or a principal owner's ethnicity, race, and sex in the same data collection form or at the same time.

3. *Recording an applicant's response regarding minority-owned business status separate from the application.* A financial institution must record an applicant's response to the financial institution's inquiry pursuant to § 1002.107(a)(18) separate from the application and accompanying information. See comment 111(b)–1. If the financial institution provides a paper or electronic data collection form, the data collection form must not be part of the application form or any other document that the financial institution uses to provide or collect any information other than women-owned business status, minority-owned business status, principal owners' ethnicity, race, and sex, and the number of the applicant's principal owners. See the sample data collection form in appendix E. For example, if the financial institution sends the data collection form via email, the data collection form should be a separate attachment to the email or accessed through a separate link in the email. If the financial

institution uses a web-based data collection form, the form should be on its own page.

4. *Minority-owned business status not provided by applicant.* Pursuant to § 1002.107(c)(1), a financial institution shall maintain procedures reasonably designed to collect applicant-provided information, which includes the applicant's minority-owned business status. However, if a financial institution does not receive a response to the financial institution's inquiry for purposes of § 1002.107(a)(18), the financial institution reports that the applicant's minority-owned business status is ''not provided by applicant.''

*5. No verification.* Notwithstanding § 1002.107(b), a financial institution must report the applicant's response, the applicant's refusal to answer the inquiry, or the applicant's failure to respond to the inquiry pursuant to § 1002.107(a)(18), even if the financial institution verifies or otherwise obtains an applicant's minority-owned business status for other purposes.

*6. No reporting based on visual observation or surname.* A financial institution does not report minority-owned business status based on visual observation, surname, or any basis other than the applicant's response to the inquiry that the financial institution makes to satisfy § 1002.107(a)(18) or, if the financial institution is permitted to report based on previously collected data, on the basis of the applicant's response to the inquiry that the financial institution previously made to satisfy § 1002.107(a)(18).

7. *Previously collected data.* A financial institution may report minority-owned business status based on previously collected data if the financial institution is permitted to do so pursuant to § 1002.107(c)(2) and its commentary.

*107(a)(19) Women-owned business status.*

1. *General.* Unless a financial institution is permitted to report women-owned business status based on previously collected data pursuant to § 1002.107(c)(2), a financial institution must ask an applicant whether it is a women-owned business for each covered application. The financial institution must permit an applicant to refuse to answer the financial institution's inquiry and must inform the applicant that the applicant is not required to provide the information. The financial institution must report the applicant's response, its refusal to answer the inquiry (such as when the applicant indicates that it does not wish to provide the requested information), or its failure to respond to the inquiry (such as when the applicant fails to submit a data collection form). See appendix F for additional instructions on collecting and reporting women-owned business status.

2. *Notice of non-discrimination.* When requesting women-owned business status from an applicant, a financial institution must inform the applicant that the financial institution cannot discriminate on the basis of the applicant's women-owned business status, or on whether the applicant provides its women-owned business status. A financial institution may combine this non-discrimination notice regarding women-owned business status with the similar non-discrimination notices that a financial institution is required to provide when requesting minority-owned business status and a principal owner's ethnicity, race, and sex if a financial institution requests minority-owned business status, women-owned business status, and/or a principal owner's ethnicity, race, and sex in the same data collection form or at the same time.

3. *Recording an applicant's response regarding women-owned business status separate from the application.* A financial institution must record an applicant's response to the financial institution's inquiry pursuant to § 1002.107(a)(19) separate from the application and accompanying information. See comment 111(b)–1. If the financial institution provides a paper or electronic data collection form, the data collection form must not be part of the application form or any other document that the financial institution uses to provide or collect any information other than women-owned business status, minority-owned business status, principal owners' ethnicity, race, and sex, and the number of the applicant's principal owners. See the sample data collection form in appendix E. For example, if the financial institution sends the data collection form via email, the data collection form should be a separate attachment to the email or accessed through a separate link in the email. If the financial institution uses a web-based data collection form, the form should be on its own page.

4. *Women-owned business status not provided by applicant.* Pursuant to § 1002.107(c)(1), a financial institution shall maintain procedures reasonably designed to collect applicant-provided information, which includes the applicant's women-owned business status. However, if a financial institution does not receive a response to the financial institution's inquiry for purposes of § 1002.107(a)(19), the financial institution reports that the applicant's women-owned business status is ''not provided by applicant.''

5. *No verification.* Notwithstanding § 1002.107(b), a financial institution must report the applicant's response, the applicant's refusal to answer the inquiry, or the applicant's failure to respond to the inquiry pursuant to § 1002.107(a)(19), even if the financial institution verifies or otherwise obtains an applicant's women-owned business status for other purposes.

6. *No reporting based on visual observation or surname.* A financial institution does not report women-owned business status based on visual observation, surname, any basis other than the applicant's response to the inquiry that the financial institution makes to satisfy § 1002.107(a)(19) or, if the financial institution is permitted to report based on previously collected data, on the basis of the applicant's response to the inquiry that the financial institution previously made to satisfy § 1002.107(a)(19).

7. *Previously collected data.* A financial institution may report women-owned business status based on previously collected data if the financial institution is permitted to do so pursuant to § 1002.107(c)(2) and its commentary.

*107(a)(20) Ethnicity, race, and sex of principal owners.*

1. *General.* Unless a financial institution is permitted to report ethnicity, race, and sex information based on previously collected data pursuant to § 1002.107(c)(2), a financial institution must ask an applicant to report its principal owners' ethnicity, race, and sex for each covered application. The financial institution must permit an applicant to refuse to answer the financial institution's inquiries and must inform the applicant that it is not required to provide the information. The financial institution must report the applicant's responses, its refusal to answer the inquiries, or its failure to respond to the inquiries. In certain situations, discussed in comments 107(a)(20)–9 and –10 and in appendix G, a financial institution may also be required to report one or more principal owners' ethnicity and race based on visual observation and/or surname. However, a financial institution shall not report a principal owner's sex based on visual observation, surname, or any basis other than the applicant-provided information (including previously collected data if permitted pursuant to § 1002.107(c)(2)). See appendix G for additional instructions on collecting and reporting the ethnicity, race, and sex of principal owners.

2. *Notice of non-discrimination.* When requesting a principal owner's ethnicity, race, and sex from an applicant, a financial institution must inform the applicant that the financial institution cannot discriminate on the basis of a principal owner's ethnicity, race, or sex, or on whether the applicant provides the information. A financial institution may combine this non-discrimination notice with the similar non-discrimination notices that a financial institution is required to provide when requesting minority-owned business status and women-owned business status if a financial institution requests minority-owned business status, women-owned business status, and/or a principal owner's ethnicity, race, and sex in the same data collection form or at the same time.

3. *Recording an applicant's responses regarding principal owners' ethnicity, race, and sex separate from the application.* A financial institution must record an applicant's response to the financial institution's inquiries pursuant to § 1002.107(a)(20) separate from the application and accompanying information. See comment 111(b)–1. If the financial institution provides a paper or electronic data collection form, the data collection form must not be part of the application form or any other document that the financial institution uses to provide or collect any information other than women-owned business status, minority-owned business status, principal owners' ethnicity, race, and sex, and the number of the applicant's principal owners. See the sample data collection form in appendix E. For example, if the financial institution sends the data collection form via email, the data collection form should be a separate attachment to the email or accessed through a separate link in the email. If the financial institution uses a web-based data collection form, the form should be on its own page.

4. *Ethnicity, race, or sex of principal owners not provided by applicant.* Pursuant to § 1002.107(c)(1), a financial institution

shall maintain procedures reasonably designed to collect applicant-provided information, which includes the ethnicity, race, and sex of an applicant's principal owners. However, if a financial institution is nonetheless unable to collect the principal owners' ethnicity, race, or sex from the applicant, and if the financial institution is not required to report based on visual observation or surname, the financial institution reports that the principal owner's ethnicity, race, or sex (as applicable) is ''not provided by applicant.''

5. *Determining who is a principal owner.* Generally, an applicant determines its principal owners and decides whether to provide information about those principal owners. However, as discussed in comments 107(a)(20)–9 and –10 and appendix G, a financial institution may be required to report ethnicity and race information based on visual observation and/or surname if the applicant does not provide ethnicity, race, or sex information for at least one principal owner and the financial institution meets in person with one or more principal owners. Thus, a financial institution may need to determine if a natural person that it meets with in person is a principal owner. In that case, the financial institution may either ask the natural person who is acting on behalf of an applicant whether that natural person is a principal owner, or it may independently determine if the natural person is a principal owner. For example, if a financial institution has collected information regarding an applicant's ownership structure and obtained the name or identity of the natural person for other purposes, it may use this information to independently determine whether the natural person who meets in person with the financial institution is a principal owner. If a financial institution asks if a natural person is a principal owner, the financial institution can rely on an applicant's or natural person's response, unless the financial institution has knowledge to the contrary. The financial institution is not required to verify any responses regarding whether a natural person is a principal owner.

6. *Ethnicity.* i. *Aggregate categories.* A financial institution must permit an applicant to provide a principal owner's ethnicity for purposes § 1002.107(a)(20) using one or more of the following aggregate categories:

A. Hispanic or Latino.

B. Not Hispanic or Latino.

ii. *Disaggregated subcategories.* A financial institution must permit an applicant to provide a principal owner's ethnicity for purposes of § 1002.107(a)(20) using one or more the following disaggregated subcategories, regardless of whether the applicant has indicated that the relevant principal owner is Hispanic or Latino and regardless of whether the applicant selects any aggregate categories: Cuban; Mexican; Puerto Rican; or Other Hispanic or Latino. If an applicant indicates that a principal owner is Other Hispanic or Latino, the financial institution must permit the applicant to provide additional information regarding the principal owner's ethnicity, such as indicating, for example, that the principal owner is Argentinean, Colombian, Dominican, Nicaraguan, Salvadoran, or Spaniard. If an applicant chooses to provide additional information regarding a principal owner's ethnicity, such as indicating that a principal owner is Argentinean, a financial institution must report that additional information as free-form text in the appropriate data reporting field.

iii. *Selecting multiple categories.* The financial institution must permit the applicant to select one, both, or none of the aggregate categories and as many disaggregated subcategories as the applicant chooses. A financial institution must permit an applicant to select a disaggregated subcategory even if the applicant does not select the corresponding aggregate category. A financial institution must also permit the applicant to refuse to provide ethnicity information for one or more principal owners. If an applicant provides ethnicity information for a principal owner, the financial institution reports all of the aggregate categories and disaggregated subcategories provided by the applicant. For example, if an applicant selects both aggregate categories and four disaggregated subcategories for a principal owner, the financial institution reports the two aggregate categories that the applicant selected and all four of the disaggregated subcategories that the applicant selected.

iv. *Information not provided by applicant.* Unless a financial institution is required to report based on visual observation and/or surname (see comments 107(a)(20)–9 and –10 and appendix G), if an applicant refuses or fails to provide ethnicity information for a principal owner, the financial institution reports that the applicant declined to provide the information or failed to respond, as applicable. Because there are data reporting fields for four principal owners, when submitting data to the Bureau, a financial institution will need to report that the requirement to report ethnicity is not applicable for some principal owners if the applicant has fewer than four principal owners. For example, if an applicant has only one principal owner, the financial institution reports that the requirement to report ethnicity is not applicable in the data fields for principal owners two through four.

7. *Race.* i. *Aggregate categories.* A financial institution must permit an applicant to provide a principal owner's race for purposes of § 1002.107(a)(20) using one or more of the following aggregate categories:

A. American Indian or Alaska Native.

B. Asian.

C. Black or African American.

D. Native Hawaiian or Other Pacific Islander.

E. White.

ii. *Disaggregated subcategories.* The financial institution must permit an applicant to provide a principal owner's race for purposes of § 1002.107(a)(20) using one or more of the disaggregated subcategories as listed in this comment 107(a)(20)–7.ii and set forth in the sample data collection form in appendix E, regardless of whether the applicant has selected the corresponding aggregate category.

A. The Asian aggregate category includes the following disaggregated subcategories: Asian Indian; Chinese; Filipino; Japanese; Korean; Vietnamese; and Other Asian. An applicant must also be permitted to provide the principal owner's race using one or more of these disaggregated subcategories regardless of whether the applicant indicates that the principal owner is Asian and regardless of whether the applicant selects any aggregate categories. Additionally, if an applicant indicates that a principal owner is Other Asian, the financial institution must permit the applicant to provide additional information about the principal owner's race, such as providing information, for example, that the principal owner is Cambodian, Hmong, Laotian, Pakistani, or Thai.

B. The Black or African American category includes the following disaggregated subcategories: African American; Ethiopian; Haitian; Jamaican; Nigerian; Somali; or Other Black or African American. An applicant must also be permitted to provide the principal owner's race using one or more of these disaggregated subcategories regardless of whether the applicant indicates that the principal owner is Black or African American and regardless of whether the applicant selects any aggregate categories. Additionally, if an applicant indicates that a principal owner is Other Black or African American, the financial institution must permit the applicant to provide additional information about the principal owner's race, such as providing information, for example, that the principal owner is Barbadian, Ghanaian, or South African.

C. The Native Hawaiian or Other Pacific Islander includes the following disaggregated subcategories: Guamanian or Chamorro; Native Hawaiian; Samoan; and Other Pacific Islander. An applicant must also be permitted to provide the principal owner's race using one or more of these disaggregated subcategories regardless of whether the applicant indicates that the principal owner is Native Hawaiian or Other Pacific Islander and regardless of whether the applicant selects any aggregate categories. Additionally, if an applicant indicates that a principal owner is Other Pacific Islander, the financial institution must permit the applicant to provide additional information about the principal owner's race, such as providing information, for example, that the principal owner is Fijian or Tongan.

D. If an applicant chooses to provide additional information regarding a principal owner's race, such as indicating that a principal owner is Cambodian, Barbadian, or Fijian, a financial institution must report that additional information as free-form text in the appropriate data reporting field.

E. In addition to permitting an applicant to indicate that a principal owner is American Indian or Alaska Native, a financial institution must permit an applicant to provide the name of an enrolled or principal tribe. An applicant must be permitted to provide the name of an enrolled or principal tribe regardless of whether the applicant indicates that the principal owner is American Indian or Alaska Native. If an applicant chooses to provide the name of an enrolled or principal tribe, a financial institution must report that information as free-form text in the appropriate data reporting field.

iii. *Selecting multiple categories.* The financial institution must permit the applicant to select as many aggregate categories and disaggregated subcategories as the applicant chooses. A financial institution must permit an applicant to select one or more disaggregated subcategories even if the applicant does not select an aggregate category. A financial institution must also permit the applicant to refuse to provide this information for one or more principal owners. If an applicant provides race information for a principal owner, the financial institution reports all of the aggregate categories and disaggregated subcategories provided by the applicant. For example, if an applicant selects two aggregate categories and five disaggregated subcategories for a principal owner, the financial institution reports the two aggregate categories that the applicant selected and the five disaggregated subcategories that the applicant selected.

iv. *Information not provided by applicant.* Unless the financial institution is required to report based on visual observation and/or surname (see comments 107(a)(20)–9 and –10 and appendix G), if an applicant refuses or fails to provide race information for a principal owner, the financial institution reports that the applicant declined to provide the information or failed to respond, as applicable. Because there are data reporting fields for four principal owners, when submitting data to the Bureau, a financial institution must report that the requirement to report race is not applicable for some principal owners if the applicant has fewer than four principal owners. For example, if an applicant has only one principal owner (*i.e.,* only one natural person directly owns 25 percent or more of the applicant's equity interests), the financial institution reports that the requirement to report race is not applicable in the data reporting fields for principal owners two through four.

8. *Sex.* A financial institution must permit an applicant to provide a principal owner's sex for purposes of § 1002.107(a)(20) using one or more of the following categories: Male, Female, and/or that the principal owner prefers to self-describe their sex. Additionally, if an applicant indicates that a principal owner prefers to self-describe their sex, the financial institution must permit the applicant to provide additional information about the principal owner's sex. A financial institution must permit an applicant to select as many categories as the applicant chooses. A financial institution reports the category or categories selected by the applicant, any additional information provided by the applicant (reported as free-form text in the appropriate data reporting field), or reports that the applicant refused to provide the information or failed to respond. A financial institution is not permitted to report sex based on visual observation, surname, or any basis other than the applicant-provided information. Because there are data reporting fields for four principal owners, when submitting data to the Bureau a financial institution must report that the requirement to report sex is not applicable for some principal owners if the applicant has fewer than four principal owners. For example, if an applicant has only one principal owner, the financial institution reports that the requirement to report sex is not applicable in the data fields for principal owners two through four. See appendix G for additional information on collecting and reporting a principal owner's sex.

9. *Reporting based on visual observation and/or surname.* If a financial institution meets in person with one or more of an applicant's principal owners and the applicant does not provide ethnicity, race, or sex information for at least one principal owner, the financial institution must report at least one principal owner's ethnicity and race (but not sex) based on visual observation, surname, or a combination of both visual observation and surname. (See comment 107(a)(20)-10 for additional information regarding what constitutes an in-person meeting with an applicant's principal owners.) However, a financial institution is not required to report based on visual observation and/or surname if the principal owner only meets in person with a third party through whom it is submitting an application to the financial institution. For example, a financial institution is not required to report based on visual observation and/or surname when an employee or officer of an equipment dealer or retailer that is not an affiliate of the financial institution meets in person with a principal owner.

10. *Meeting in person with a principal owner.* i. *In-person meetings.* A financial institution meets in person with a principal owner if an employee or officer of the financial institution or one of its affiliates has a meeting or discussion with the applicant's principal owner about an application and can visually observe the principal owner. The following provides a non-exhaustive list of examples to illustrate when a financial institution meets in person with a principal owner for purposes of the requirement to collect principal owners' race and ethnicity information based on visual observation and/or surname if not provided by the applicant:

A. A principal owner comes to a financial institution's branch or office and meets with the financial institution's loan officer to discuss the status of a pending application.

B. A principal owner comes to a financial institution's branch or office and meets in person with one or more employees or officers of a financial institution in order to complete an application and related paperwork.

C. A principal owner contacts a financial institution's loan officer using an electronic communication method with a video component and, using the video component, meets with the loan officer to discuss outstanding documentation needed for a pending application.

ii. *Not in-person meetings.* The following provides a non-exhaustive list of examples to illustrate when a financial institution does not meet in person with a principal owner for purposes of the requirement to collect principal owners' race and ethnicity information via visual observation and/or surname if not provided by the applicant:

A. A principal owner drops off documents at a financial institution's branch or office or provides the applicant's name and drops off documents without engaging in any discussion regarding a covered application.

B. A principal owner meets in person with an employee or officer of the financial institution to discuss something other than a covered application, such as another financial product.

C. The financial institution meets with a principal owner after the application process is complete, such as at account opening or loan closing.

D. A financial institution meets with a principal owner before the applicant submits an application.

11. *Use of aggregate categories when reporting based on visual observation or surname.* When reporting ethnicity and race based on visual observation and/or surname, the financial institution uses only the aggregate ethnicity and race categories. See appendix G for additional information on collecting and reporting based on visual observation and/or surname.

12. *No verification of ethnicity, race, and sex of principal owner.* Notwithstanding § 1002.107(b), a financial institution is neither required nor permitted to verify the ethnicity, race, or sex information that the applicant provides for purposes of § 1002.107(a)(20), even if the financial institution verifies or otherwise obtains the ethnicity, race, or sex of the applicant's principal owners for other purposes. Additionally, if an applicant refuses to respond to the inquiry pursuant to § 1002.107(a)(20) or fails to respond to this inquiry, the financial institution reports that the applicant declined to provide the information or did not respond to the request to provide the information (as applicable), unless the financial institution is required to report ethnicity and race based on visual observation and/or surname. The financial institution does not report ethnicity, race, or sex based on information that the financial institution collects for other purposes.

*107(a)(21) Number of principal owners.*

1. *General.* A financial institution may request an applicant's number of principal owners from the applicant or may determine the number of principal owners from information provided by the applicant or that the financial institution otherwise obtains. If the financial institution asks the applicant to provide the number of its principal owners pursuant to § 1002.107(a)(21), a financial institution must provide the definition of principal owner set forth in § 1002.102(o). If permitted pursuant to § 1002.107(c)(2), a financial institution may also report an applicant's number of principal owners based on previously collected data.

2. *Number of principal owners provided by applicant; verification of number of principal owners.* The financial institution may rely on statements or information provided by the applicant in collecting and reporting the number of the applicant's principal owners. However, pursuant to § 1002.107(b), if the financial institution verifies the number of principal owners provided by the applicant, it must report the verified information. The financial institution is not required to verify the number of principal owners, but if the financial institution verifies the number of

principal owners in making the credit decision, then the financial institution reports the verified number of principal owners.

3. *Number of principal owners not provided by applicant and otherwise undetermined.* Pursuant to § 1002.107(c)(1), a financial institution shall maintain procedures reasonably designed to collect applicant-provided information, which includes the number of principal owners of the applicant. However, if a financial institution is nonetheless unable to collect or otherwise determine the applicant's number of principal owners, the financial institution reports that the number of principal owners is ''not provided by applicant and otherwise undetermined.''

*107(b) Verification of applicant-provided information.*

1. *Reliance on statements or information provided by an applicant.* A financial institution may rely on statements made by an applicant (whether made in writing or orally) or information provided by an applicant when compiling and reporting data pursuant to subpart B of this part for applicant-provided data; the financial institution is not required to verify those statements. However, if the financial institution does verify applicant statements for its own business purposes, such as statements relating to gross annual revenue or time in business, the financial institution reports the verified information. Depending on the circumstances and the financial institution's procedures, certain applicant-provided data can be collected without a specific request from the applicant. For example, gross annual revenue may be collected from tax return documents. Applicant-provided data are the data required that are or could be provided by the applicant, including § 1002.107(a)(5) through (7) and (13) through (21). See comment 107(c)(2)–3.

*107(c) Time and manner of collection.*

*107(c)(1) In general.*

1. *Procedures.* The term ''procedures'' refers to the actual practices followed by a financial institution as well as its stated policies or procedures. For example, if a financial institution's stated policy is to collect applicant-provided data on or with a paper application form, but the financial institution's employees encourage applicants to skip the page that asks whether the applicant is a minority-owned business or a women-owned business under § 1002.107(a)(18) and (19), the financial institution's procedures are not reasonably designed to obtain a response.

2. *Latitude to design procedures.* A financial institution has flexibility to establish procedures concerning the timing and manner that it collects applicant-provided data that work best for its particular lending model and product offerings, provided that those procedures are reasonably designed to collect the applicant-provided data in § 1002.107(a).

3. *Applicant-provided data.* Applicant-provided data are the data required that are or could be provided by the applicant, including § 1002.107(a)(5) (credit type), § 1002.107(a)(6) (credit purpose), § 1002.107(a)(7) (amount applied for), § 1002.107(a)(13) (address or location for purposes of determining census tract), § 1002.107(a)(14) (gross annual revenue), § 1002.107(a)(15) (NAICS code, or information about the business such that the financial institution can determine the applicant's NAICS code), § 1002.107(a)(16) (number of workers), § 1002.107(a)(17) (time in business), § 1002.107(a)(18) (minority-owned business status), § 1002.107(a)(19) (women-owned business status), § 1002.107(a)(20) (ethnicity, race, and sex of the applicant's principal owners), and § 1002.107(a)(21) (number of principal owners). Applicant-provided data does not include data that are generated or supplied only by the financial institution, including § 1002.107(a)(1) (unique identifier), § 1002.107(a)(2) (application date), § 1002.107(a)(3) (application method), § 1002.107(a)(4) (application recipient), § 1002.107(a)(8) (amount approved or originated), § 1002.107(a)(9) (action taken), § 1002.107(a)(10) (action taken date), § 1002.107(a)(11) (denial reasons), § 1002.107(a)(12) (pricing data), and § 1002.107(a)(13) (census tract, based on address or location provided by the applicant). Depending on the circumstances and the financial institution's procedures, certain applicant-provided data can be collected without a specific request from the applicant. For example, credit type may be collected based on the type of product chosen by the applicant or NAICS code may be collected from an applicant's tax return that the applicant has otherwise provided to the financial institution.

4. *Reasonably designed—generally.* Whether a financial institution's procedures are reasonably designed to collect applicant-provided data depends on the financial institution's particular lending model and product offerings. A financial institution shall reassess on a periodic basis, based on available data, whether its procedures are reasonably designed to obtain a response. For example, a financial institution may be able to assess whether its procedures are reasonably designed by comparing its response rate with similarly situated financial institutions (for instance, those that offer similar products, use a similar lending model, or are of a similar size). A financial institution is permitted, but not required, to develop different procedures for different applicant-provided data, so long as the procedures used are reasonably designed to obtain a response. A financial institution is permitted, but not required, to make more than one attempt to obtain applicant-provided data if the applicant does not respond to an initial request.

5. *Examples of procedures that are generally reasonably designed to obtain a response.* Although a fact-based determination, the following procedures reflect practices concerning the time or manner of collection that are generally reasonably designed to obtain a response:

i. *Timing of collection.* A financial institution requests applicant-provided data early in the application process; for example, at the time of a covered application, as defined in § 1002.103. The earlier in the application process, the more likely the timing of collection is reasonably designed to obtain a response.

ii. *Manner of collection.* A financial institution requests applicant-provided data on the same form or in connection with other required information. For example, a financial institution requests applicant-provided data as part of a written application form or on a separate data collection form provided with the written application form. See also comments 107(a)(18)–3, 107(a)(19)–3, and 107(a)(20)–3, which discuss the use of a separate data collection form for collecting minority-owned business status, women-owned business status, and the ethnicity, race, and sex of an applicant's principal owners.

6. *Examples of procedures that are generally not reasonably designed to obtain a response.* The following procedures reflect practices concerning the time or manner of collection that are generally not reasonably designed to obtain a response. Depending on the particular facts, however, these procedures may be reasonably designed to obtain a response; for example, if the financial institution has evidence or a reason to believe that under its procedures the response rate would be similar to or better than other alternatives.

i. *Timing of collection.* A financial institution requests applicant-provided data simultaneous with or after notifying an applicant of its action taken on a covered application.

ii. *Manner of collection.* A financial institution requests applicant-provided data in a manner that imposes unnecessary applicant burden or is inconsistent with the rest of its application process. For example, collecting application information related to the creditworthiness determination in electronic form, but mailing a paper form to the applicant seeking the data required under § 1002.107(a) that the financial institution does not otherwise need for its creditworthiness determination and requiring the applicant to mail it back.

7. *Updated applicant-provided data.* A financial institution reports updated applicant-provided data if it obtains more current data during the application process. For example, if an applicant states it has 100 non-owners working for the business, but then the applicant notifies the financial institution that the number is actually 75, the financial institution reports 75 non-owners working for the business. For reporting of verified applicant-provided information, see § 1002.107(b) and comment 107(b)–1.

8. *Change in determination of small business status.* If a financial institution changes its determination regarding an applicant's status as a small business under § 1002.106(b), it must follow the procedures described in comments 106(b)–1 and –2.

*107(c)(2) Previously collected data.*

1. *In general.* A financial institution may reuse certain previously collected data if the requirements of § 1002.107(c)(2) are met. In that circumstance, a financial institution need not seek to collect the data anew in connection with a subsequent covered application. For example, if an applicant applies for and is granted a term loan, and

then subsequently applies for a credit card in the same calendar year, the financial institution need not request again the data set forth in § 1002.107(c)(2). Similarly, if an applicant applies for more than one covered credit transaction at one time, a financial institution need only ask once for the data set forth in § 1002.107(c)(2).

2. *Data that can be reused.* Subject to the requirements of § 1002.107(c)(2) and comment 107(c)(2)–3, a financial institution may reuse the following data:
§ 1002.107(a)(13) (census tract),
§ 1002.107(a)(14) (gross annual revenue),
§ 1002.107(a)(15) (NAICS code),
§ 1002.107(a)(16) (number of workers),
§ 1002.107(a)(17) (time in business),
§ 1002.107(a)(18) (minority-owned business status), § 1002.107(a)(19) (women-owned business status), § 1002.107(a)(20) (ethnicity, race, and sex of principal owners), and § 1002.107(a)(21) (number of principal owners). A financial institution is not, however, permitted to reuse other data, such as § 1002.107(a)(6) (credit purpose).

3. *Previously reported data without a substantive response.* Section 1002.107(c)(2) permits a financial institution to reuse certain previously collected data to satisfy § 1002.107(a)(13) through (21), if certain conditions are met. Data have not been ''previously collected'' within the meaning of this provision if the applicant did not provide a substantive response to the financial institution's request for that data and the financial institution was not otherwise able to obtain the requested data (for example, from the applicant's credit report, tax returns, or through visual observation or surname collection for race and ethnicity information).

4. *Collection in the same calendar year.* Pursuant to § 1002.107(c)(2)(i), data can be reused if they are collected in the same calendar year. For applications that span more than one calendar year, the following applies:

i. If the data are collected in connection with a covered application in one calendar year, but then final action was taken on the application in the following calendar year, the financial institution may consider the data as collected in the year that final action was taken on the application.

ii. If data are collected in connection with a covered application in one calendar year, a financial institution may reuse that data pursuant to § 1002.107(c)(2) in a subsequent application initiated in the same calendar year, even if final action was taken on the subsequent application in the following calendar year.

5. *Reason to believe data are inaccurate.* Whether a financial institution has reason to believe data are inaccurate pursuant to § 1002.107(c)(2)(ii) depends on the particular facts and circumstances. For example, a financial institution may have reason to believe data on the applicant's women-owned business status, minority-owned business status, and ethnicity, race, and sex of principal owners may be inaccurate if it knows that the applicant has had a change in ownership.

6. *Minority-owned business status and women-owned business status.* If the financial institution asked the applicant to provide its minority-owned business status or women-owned business status for purposes of § 1002.107(a)(18) and (19) and the applicant refused to provide the information (such as by selecting ''I do not wish to provide this information'' on a data collection form or by telling the financial institution that it did not wish to provide the information), the financial institution may use that response when reporting data for a subsequent application pursuant to § 1002.107(c)(2). However, if the applicant failed to respond (such as by leaving the response to the question blank or by failing to return a data collection form), the financial institution must inquire about the applicant's minority-owned business status or women-owned business status, as applicable, because the data were not previously obtained.

7. *Principal owners' ethnicity, race, and sex.* If the financial institution asked the applicant to provide its principal owners' ethnicity, race, or sex for purposes § 1002.107(a)(20) and the applicant refused to provide the information (such as by selecting ''I do not wish to provide this information'' on a data collection form or by telling the financial institution that it did not wish to provide the information) or if the financial institution reported ethnicity and race based on visual observation and/or surname, the financial institution may use these data when reporting information for a subsequent application under § 1002.107(c)(2). However, if the applicant failed to respond (such as by leaving the response to the question blank or by failing to return a data collection form) and the financial institution did not report ethnicity and race based on visual observation and/or surname, the financial institution must inquire about the ethnicity, race, and sex of the applicant's principal owners, as applicable, because the data were not previously obtained.

*Section 1002.108—Firewall*

*108(a) Definitions.*

1. *Involved in making any determination concerning a covered application.* An employee or officer is involved in making a determination concerning a covered application if the employee or officer makes, or otherwise participates in, a decision regarding the evaluation of a covered application or the creditworthiness of an applicant for a covered credit transaction. This includes, but is not limited to, employees and officers serving as underwriters. The decision that an employee or officer makes or participates in must be about a specific covered application. An employee or officer is not involved in making a determination concerning a covered application if the employee or officer is involved in making a decision that affects covered applications generally, or interacts with small businesses prior to them becoming applicants or submitting a covered application. This group might include officers and employees who develop policies and procedures, program systems, or conduct marketing. Additionally, an employee or officer is not involved in making a determination concerning a covered application if the employee or officer makes or participates in a decision after the financial institution has taken final action on the application, such as a decision about servicing or collecting a covered credit transaction. Furthermore, an officer or employee is not involved in making a determination concerning a covered application for purposes of § 1002.108 if the officer or employee simply uses a check box form to confirm whether an applicant has submitted all necessary documents or handles a minor or clerical matter during the application process, such as suggesting or selecting a time for an appointment with an applicant.

2. *Should have access.* i. *General.* A financial institution may determine that an employee or officer should have access for purposes of § 1002.108 if that employee or officer is assigned one or more job duties that may require the employee or officer to collect (based on visual observation, surname, or otherwise), see, consider, refer to, or use information otherwise subject to the prohibition in § 1002.108(b). The employee or officer does not have to be required to collect, see, consider, refer to or use such information or to actually collect, see, consider, refer to or use such information. It is sufficient if the employee or officer might need to do so to perform the employee's or officer's assigned job duties. For example, if a loan officer's job description states that the loan officer may need to collect ethnicity and race information based on visual observation and/or surname or if the loan officer is assigned the task of assisting applicants with the completion of data collection forms, the financial institution may determine that the loan officer should have access. If a financial institution determines that an employee or officer who is involved in making any determination concerning a covered application should have access for purposes of § 1002.108, the financial institution is responsible for ensuring that the employee or officer only accesses and uses the protected information for lawful purposes.

ii. *When a group of employees or officers should have access.* A financial institution may determine that all employees or officers with the same job description or assigned duties should have access for purposes of § 1002.108. If a job description assigns one or more tasks that may require access to one or more applicants' responses to the financial institution's inquiries under § 1002.107(a)(18) through (20), the financial institution may determine that all employees and officers who share that job description should have access for purposes of § 1002.108. For example, if the job description for the position of loan officer states that a loan officer may have to distribute, collect, and help applicants complete a data collection form that asks about the applicant's minority-owned business status, women-owned business status, and its principal owners' ethnicity, race, and sex, the financial institution may determine that all employees and officers who have been assigned the position of loan officer should have access for purposes of § 1002.108.

*108(b) Prohibition on access to certain information.*

1. *Scope of information subject to the prohibition.* i. *When the prohibition applies.* The prohibition in § 1002.108(b) applies only to an applicant's responses to the inquiries that the covered financial institution makes to satisfy § 1002.107(a)(18) through (20). For example, if a financial institution satisfies § 1002.107(a)(18) through (20) by using a paper data collection form to ask an applicant if it is a minority-owned business, if it is a women-owned business, and for the ethnicity, race, and sex of its principal owners, the prohibition applies to the responses that the applicant provides on the paper data collection form and any other paper or electronic records that the financial institution creates based on the applicant's responses provided on the paper data collection form. Similarly, if a financial institution satisfies § 1002.107(a)(18) through (20) by asking an applicant about its minority-owned business status, its women-owned business status, and the ethnicity, race, and sex of its principal owners during a telephone call, the prohibition applies to the responses to those inquiries provided during that telephone call and to any records created on the basis of those responses.

ii. *When the prohibition does not apply.* Because the prohibition in § 1002.108(b) only applies to the applicant's responses to the inquiries that the financial institution makes to satisfy § 1002.107(a)(18) through (20), the prohibition does not apply to ethnicity or race information about principal owners that the financial institution collects via visual observation or surname. Additionally, the prohibition in § 1002.108(b) does not apply to an applicant's responses to inquiries regarding minority-owned or women-owned business status, or principal owners' ethnicity, race, or sex, made for other purposes. Thus, an employee or officer who obtains information to determine if an applicant is eligible for a Small Business Administration program for women-owned businesses may make determinations concerning the applicant's covered application without regard to whether the exception in § 1002.108(c) is satisfied. Additionally, § 1002.108(b) does not prohibit an employee or officer from making a determination regarding a covered application if the employee or officer generally knows that an applicant is a minority-owned business or women-owned business or knows the ethnicity, race, or sex of any of the applicant's principal owners due to activities unrelated to the inquiries made to satisfy the financial institution's obligations under subpart B of this part. Thus, an employee or officer who knows, for example, that an applicant is a minority-owned business due to social relationships or other professional relationships with the applicant or any of its principal owners may make determinations concerning the applicant's covered application.

2. *Scope of persons subject to the prohibition.* The prohibition in § 1002.108(b) applies to an employee or officer of a covered financial institution or its affiliate if the employee or officer is involved in making any determination concerning a covered application. For example, if a financial institution is affiliated with company B and an employee of company B is involved in making a determination regarding a covered application on behalf of the financial institution, then the financial institution must comply with § 1002.108 with regard to company B's employee. Section 1002.108 does not require a financial institution to limit the access of employees and officers of third parties who are not affiliates of the financial institution. Section 1002.108 does not require a financial institution to limit the access of third parties (who are not employees or officers of the financial institution or its affiliates) through whom the financial institution receives covered applications.

*108(c) Exception to the prohibition on access to certain information.*

1. *General.* A financial institution is not required to limit the access of a particular employee or officer who is involved in making determinations concerning covered applications if the financial institution determines that the particular employee or officer should have access to the information collected pursuant to § 1002.107(a)(18) through (20) and the financial institution provides the notice required by § 1002.108(d). A financial institution can also determine that several employees and officers should have access or that all of a group of similarly situated employees or officers should have access. See comment 108(a)–2. However, the financial institution cannot permit all employees and officers to have access simply because it has determined that one or more employees or officers should have access. For example, a financial institution may determine that a single compliance officer or all of its compliance officers should have access and then permit one or all of its compliance officers, respectively, to have access. However, the financial institution cannot permit other employees or officers to have access unless it independently determines that they should have access.

*108(d) Notice.*

1. *General.* If a financial institution determines that one or more employees or officers should have access pursuant to § 1002.108(c), the financial institution must provide the required notice to, at a minimum, the applicant or applicants whose responses will be accessed by an employee or officer involved in making determinations regarding the applicant's or applicants' covered applications. Alternatively, the financial institution may also provide the required notice to larger group of applicants, including all applicants, if it determines that one or more officers or employees should have access.

2. *Content of the required notice.* The notice must inform the applicant that one or more employees and officers involved in making determinations regarding the applicant's covered application may have access to the applicant's responses regarding the applicant's minority-owned business status, women-owned business status, and its principal owners' ethnicity, race, and sex. The financial institution may, but is not required to, provide the notice on its data collection form. If the financial institution provides the notice on an electronic or paper data collection form, the notice must use language substantially similar to the following: ''Employees and officers making determinations concerning an application, such as loan officers and underwriters, may have access to the information provided on this form.'' If the financial institution provides the notice orally, it must use language substantially similar to the following: ''Employees and officers making determinations concerning your application, such as loan officers and underwriters, may have access to your responses regarding your minority-owned business status, your women-owned business status, and your principal owners' ethnicity, race, or sex.''

3. *Timing for providing the notice.* If the financial institution is providing the notice orally, it must provide the notice required by § 1002.108(d) prior to asking the applicant if it is a minority-owned business or women-owned business and prior to asking for a principal owner's ethnicity, race, or sex. If the notice is provided on the same paper or electronic data collection form as the inquiries about minority-owned business status, women-owned business status, and the principal owners' ethnicity, race, or sex, the notice must appear at the top of the form. If the notice is provided in an electronic or paper document that is separate from the data collection form, the notice must be provided at the same time as the data collection form or prior to providing data collection form. Additionally, the notice must be provided with the non-discrimination notices required pursuant to § 1002.107(a)(18) through (20). See appendix E.

*Section 1002.109—Reporting of Data to the Bureau*

109(a) Reporting to the Bureau.

109(a)(2) Reporting by subsidiaries.

*1. Subsidiaries. A covered financial institution is considered a subsidiary of another covered financial institution for purposes of reporting data pursuant to § 1002.109 if more than 50 percent of the ownership or control of the first covered financial institution is held by the second covered financial institution.*

*109(a)(3) Reporting obligations where multiple financial institutions are involved in a covered credit transaction.*

1. *General.* The following provides guidance on how to report originations and applications involving more than one institution. The discussion below assumes that all of the parties are covered financial institutions. However, the same principles apply if any of the parties is not a covered financial institution. See also comment 109(a)(3)–2 (providing examples of transactions involving more than one financial institution) and comment 109(a)(3)–3 (discussing how to report actions taken by agents).

i. Only one financial institution reports each originated covered credit transaction as an origination. If more than one financial institution was involved in the origination of a covered credit transaction, the financial institution that made the final credit decision approving the application reports the covered

credit transaction as an origination. It is not relevant whether the covered credit transaction closed or, in the case of an application, would have closed in the financial institution's name. If more than one financial institution approved an application prior to closing or account opening and one of those financial institutions purchased the covered credit transaction after closing, the financial institution that purchased the covered credit transaction after closing reports the covered credit transaction as an origination. If a financial institution reports a transaction as an origination, it reports all of the information required for originations, even if the covered credit transaction was not initially payable to the financial institution that is reporting the covered credit transaction as an origination.

ii. In the case of an application for a covered credit transaction that did not result in an origination, a financial institution reports the action it took on that application if it made a credit decision on the application or was reviewing the application when the application was withdrawn or closed for incompleteness. It is not relevant whether the financial institution received the application directly from the applicant or indirectly through another party, such as a broker, or whether another financial institution also reviewed and reported an action taken on the same application.

2. *Examples.* The following scenarios illustrate how a financial institution reports a particular application or originated covered credit transaction. The illustrations assume that all of the parties are covered financial institutions. However, the same principles apply if any of the parties is not a covered financial institution.

i. Financial Institution A received a covered application from an applicant and forwarded that application to Financial Institution B. Financial Institution B reviewed the application and approved the covered credit transaction prior to closing. The covered credit transaction closed in Financial Institution A's name. Financial Institution B purchased the covered credit transaction from Financial Institution A after closing. Financial Institution B was not acting as Financial Institution A's agent. Since Financial Institution B made the final credit decision prior to closing, Financial Institution B reports the application as an origination. Financial Institution A does not report the application.

ii. Financial Institution A received a covered application from an applicant and forwarded that application to Financial Institution B. Financial Institution B reviewed the application before the covered credit transaction would have closed, but the application did not result in an origination because Financial Institution B denied the application. Financial Institution B was not acting as Financial Institution A's agent. Since Financial Institution B made the credit decision, Financial Institution B reports the application as a denial. Financial Institution A does not report the application. If, under the same facts, the application was withdrawn before Financial Institution B made a credit decision, Financial Institution B would report the application as withdrawn and Financial Institution A would not report the application.

iii. Financial Institution A received a covered application from an applicant and approved the application before closing the loan in its name. Financial Institution A was not acting as Financial Institution B's agent. Financial Institution B later purchased the covered credit transaction from Financial Institution A. Financial Institution B did not review the application before closing. Financial Institution A reports the application as an origination. Financial Institution B has no reporting obligation for this transaction.

iv. Financial Institution A received a covered application from an applicant. If approved, the covered credit transaction would have closed in Financial Institution B's name. Financial Institution A denied the application without sending it to Financial Institution B for approval. Financial Institution A was not acting as Financial Institution B's agent. Since Financial Institution A made the credit decision before the loan would have closed, Financial Institution A reports the application. Financial Institution B does not report the application.

v. Financial Institution A reviewed a covered application and made the credit decision to approve a covered credit transaction using the underwriting criteria provided by a third party (*e.g.,* another financial institution or party). The third party did not review the application and did not make a credit decision prior to closing. Financial Institution A was not acting as the third party's agent. Financial Institution A reports the application. The third party has no reporting obligation for this application. Assume the same facts, except that Financial Institution A made a credit decision to approve the application, and the applicant chose not to accept the covered credit transaction from Financial Institution A. Financial Institution A reports the application as approved but not accepted and the third party does not report the application.

vi. Financial Institution A reviewed and made the credit decision on a covered application based on the criteria of a third-party insurer or guarantor (for example, a government or private insurer or guarantor). Financial Institution A reports the action taken on the application.

vii. Financial Institution A received a covered application and forwarded it to Financial Institutions B and C. Financial Institution A made a credit decision, acting as Financial Institution D's agent, and approved the application. Financial Institution B made a credit decision approving the application, and Financial Institution C made a credit decision denying the application. The applicant did not accept the covered credit transaction from Financial Institution D. Financial Institution D reports the application as approved but not accepted. Financial Institution A does not report the application. The applicant accepted the offer of credit from Financial Institution B, and credit was extended. Financial Institution B reports the origination. Financial Institution C reports the application as denied.

3. *Agents.* If a covered financial institution made a credit decision on a covered application through the actions of an agent, the financial institution reports the application. For example, acting as Financial Institution A's agent, Financial Institution B approved an application prior to closing and a covered credit product was originated. Financial Institution A reports the covered credit product as an origination. State law determines whether one party is the agent of another.

*109(b) Financial institution identifying information.*

*Paragraph 109(b)(4).*

1. *Federal prudential regulator.* For purposes of § 1002.109(b)(4), *Federal prudential regulator* means, if applicable, the Federal prudential regulator for a financial institution that is a depository institution as determined pursuant to section 3q of the Federal Deposit Insurance Act (12 U.S.C. 1813(q)), including the Office of the Comptroller of the Currency, the Federal Deposit Insurance Corporation, or the Board of Governors of the Federal Reserve System; or the National Credit Union Administration Board for financial institutions that are Federal credit unions.

2. *Change in Federal prudential regulator.* If the Federal prudential regulator for a financial institution changes (as a consequence of a merger or a change in the institution's charter, for example), the institution must identify its new Federal prudential regulator in its data submission under § 1002.109 for the calendar year of the change. For example, if a financial institution's Federal prudential regulator changes in February 2026, it must identify its new Federal prudential regulator in the annual submission for its 2026 data (which is due by June 1, 2027) pursuant to § 1002.109(b)(4).

*Paragraph 109(b)(5).*

1. *Federal Taxpayer Identification Number.* If a financial institution obtains a new Federal Taxpayer Identification Number (TIN), it should provide the new number in its subsequent data submission. For example, if two financial institutions that previously reported data under subpart B of this part merge and the surviving institution retained its Legal Entity Identifier but obtained a new TIN, then the surviving institution should report the new TIN with its data submission. For example, if a financial institution's TIN changes in February 2026, it must identify its new TIN in the annual submission for its 2026 data (which is due by June 1, 2027) pursuant to § 1002.109(b)(5).

*Paragraph 109(b)(6).*

1. *Legal Entity Identifier (LEI).* A Legal Entity Identifier is a utility endorsed by the LEI Regulatory oversight committee, or a utility endorsed or otherwise governed by the Global LEI Foundation (GLEIF) (or any successor of the GLEIF) after the GLEIF assumes operational governance of the global LEI system. A financial institution complies with § 1002.109(b)(6) by reporting its current LEI number. A financial institution that does not currently possess an LEI number must obtain an LEI number, and has an ongoing obligation to maintain the LEI number. The GLEIF website provides a list of LEI issuing

organizations. A financial institution may obtain an LEI, for purposes of complying with § 1002.109(b)(6), from any one of the issuing organizations listed on the GLEIF website.

*Paragraph 109(b)(7).*

1. *RSSD ID number.* The RSSD ID is a unique identifying number assigned to institutions, including main offices and branches, by the Board of Governors of the Federal Reserve System. A financial institution's RSSD ID may be found on the website of the National Information Center, which provides comprehensive financial and structure information on banks and other institutions for which the Federal Reserve Board has a supervisory, regulatory, or research interest including both domestic and foreign banking organizations that operate in the United States. If a financial institution does not have an RSSD ID, it reports that this information is not applicable.

*Paragraph 109(b)(8).*

1. *Immediate parent entity.* An entity is the immediate parent of a financial institution for purposes of § 1002.109(b)(8)(i) through (iii) if it is a separate entity that directly owns more than 50 percent of the financial institution.

2. *Top-holding parent entity.* An entity is the top-holding parent of a financial institution for purposes of § 1002.109(b)(8)(iv) through (vi) if it ultimately owns more than 50 percent of the financial institution, and the entity itself is not controlled by any other entity. If the immediate parent entity and the top-holding parent entity are the same, the financial institution reports that § 1002.109(b)(8)(iv) through (vii) are not applicable.

3. *LEI.* For purposes of § 1002.109(b)(8)(ii) and (v), a financial institution shall report the LEI of a parent entity if the parent entity has an LEI number. If a financial institution's parent entity does not have an LEI, the financial institution reports that this information is not applicable.

4. *RSSD ID numbers.* For purposes of § 1002.109(b)(8)(iii) and § 1002.109(b)(8)(vi), a financial institution shall report the RSSD ID number of a parent entity if the entity has an RSSD ID number. If a financial institution's parent entity does not have an RSSD ID, the financial institution reports that this information is not applicable.

*Paragraph 109(b)(9).*

1. *Type of financial institution.* A financial institution complies with § 1002.109(b)(9) by selecting the applicable type or types of financial institution from the list below. A financial institution shall select all applicable types.

i. Bank or savings association.
ii. Minority depository institution.
iii. Credit union.
iv. Nondepository institution.
v. Community development financial institution (CDFI).
vi. Other nonprofit financial institution.
vii. Farm Credit System institution.
viii. Government lender.
ix. Commercial finance company.
x. Equipment finance company.
xi. Industrial loan company.
xii. Fintech.
xiii. Other.

2. *Use of ''other'' for type of financial institution.* A financial institution reports type of financial institution as ''other'' where none of the enumerated types of financial institution appropriately describe the applicable type of financial institution, and the institution reports the type of financial institution as free-form text. A financial institution that selects at least one type from the list is permitted, but not required, to also report ''other'' (with appropriate free-form text) if there is an additional aspect of its business that is not one of the enumerated types set out in comment 109(b)(9)–1.

*Paragraph 109(b)(10).*

1. *Financial institutions that voluntarily report covered applications under subpart B of this part.* A financial institution that is not a covered financial institution pursuant to § 1002.105(b) but that elects to voluntarily compile, maintain, and report data under §§ 1002.107 through 1002.109 (see comment 1002.105(b)–6) complies with § 1002.109(b)(10) by selecting ''voluntary reporter.''

*109(c) Procedures for the submission of data to the Bureau.*

1. *Filing Instructions Guide.* The Bureau includes in the *Filing Instructions Guide* additional details and procedures for the submission of data to the Bureau pursuant to § 1002.109, as well as any related materials, which are available at [a designated Bureau website].

*Section 1002.110—Publication of Data*

*110(c) Statement of financial institution's small business lending data available on the Bureau's website.*

1. *Statement.* A financial institution shall provide the statement required by § 1002.110(c) using the following, or substantially similar, language:

Small Business Lending Data Notice

*Data about our small business lending are available online for review at the Consumer Financial Protection Bureau's website at [a designated Bureau website]. The data show the geographic distribution of our small business lending applications; information about our loan approvals and denials; and demographic information about the principal owners of our small business applicants. The Bureau may delete or modify portions of our data prior to posting it if the Bureau determines that doing so would advance a privacy interest. Small business lending data for many other financial institutions are also available at this website.*

2. *website.* A financial institution without a website complies with § 1002.110(c) by making a written statement using the language in comment 110(c)–1, or substantially similar language, available upon request.

*Section 1002.111—Recordkeeping*

*111(a) Record retention.*

1. *Evidence of compliance.* Section 1002.111(a) requires a financial institution to retain evidence of compliance with subpart B of this part for at least three years after its small business lending application register is required to be submitted to the Bureau pursuant to § 1002.109. In addition to the financial institution's small business lending application register, such evidence of compliance is likely to include, but is not limited to, the applications for credit from which information in the register is drawn, as well as the files or documents that, under § 1002.111(b), are kept separate from the applications for credit.

2. *Record retention for creditors under § 1002.5(a)(4)(vii) and (viii).* A creditor that is voluntarily, under § 1002.5(a)(4)(vii) and (viii), collecting information pursuant to subpart B of this part complies with § 1002.111(a) by retaining evidence of compliance with subpart B for at least three years after June 1 of the year following the year that data was collected.

*111(b) Certain information kept separate from the rest of the application.*

1. *Separate from the application.* A financial institution may satisfy the requirement in § 1002.111(b) by keeping an applicant's responses to the financial institution's request pursuant to § 1002.107(a)(18) through (20) in a file or document that is discrete or distinct from the application and its accompanying information. For example, such information could be collected on a piece of paper that is separate from the rest of the application form. In order to satisfy the requirement in § 1002.111(b), an applicant's responses to the financial institution's request pursuant to § 1002.107(a)(18) through (20) need not be maintained in a separate electronic system, nor need they be removed from the physical files containing the application. However, the financial institution may nonetheless need to keep this information in a different electronic or physical file in order to satisfy the requirements of § 1002.108.

*111(c) Limitation on personally identifiable information in records retained under this section.*

1. *Small business lending application register.* The prohibition in § 1002.111(c) applies to data compiled and maintained pursuant to § 1002.107, data in the small business lending application register submitted by the financial institution to the Bureau under § 1002.109, the version of the register that the financial institution maintains under § 1002.111(a), and the separate record of certain information created pursuant to § 1002.111(b).

2. *Examples.* Section 1002.111(c) prohibits a financial institution from including any name, specific address (other than the census tract required under § 1002.107(a)(13)), telephone number, or email address in the data it compiles and maintains pursuant to § 1002.107, in its records under § 1002.111(b), or in data reported to the Bureau under § 1002.109. It likewise prohibits a financial institution from including any personally identifiable information concerning any individual who is, or is connected with, an applicant, except as required pursuant to § 1002.107 or § 1002.111(b). Examples of such personally identifiable information that a financial institution may not include in its small business lending application register include, but are not limited to, the following: Date of birth, Social Security number, official government-issued driver's license or

identification number, alien registration number, government passport number, or employer or taxpayer identification number.

3. *Other records.* The prohibition in § 1002.111(c) does not extend to the application or any other records that the financial institution maintains.

4. *Name and business contact information for submission.* The prohibition in § 1002.111(c) does not bar financial institutions from providing to the Bureau, pursuant to § 1002.109(b)(3), the name and business contact information of the person who may be contacted with questions about the financial institution's submission under § 1002.109.

*Section 1002.112—Enforcement*

*112(b) Bona fide errors.*

1. *Tolerances for bona fide errors.* Section 1002.112(b) provides that a financial institution is presumed to maintain procedures reasonably adapted to avoid errors with respect to a given data field if the number of errors found in a random sample of the financial institution's data submission for the data field does not equal or exceed a threshold specified by the Bureau for this purpose. The Bureau's thresholds appear in column C of the table in appendix H. The size of the random sample, set out in column B, shall depend on the size of the financial institution's small business lending application register, as shown in column A of the table in appendix H. A financial institution has not maintained procedures reasonably adapted to avoid errors if either there is a reasonable basis to believe the error was intentional or there is other evidence that the financial institution has not maintained procedures reasonably adapted to avoid errors. To illustrate, assume that a financial institution has incorrectly coded withdrawn applications as denials to such an extent that it likely prevents reliable fair lending analysis of underwriting disparities. If so, the errors would not be deemed bona fide errors under § 1002.112(b) and would violate the Act and this Regulation.

2. *Tolerances and data fields.* For purposes of determining whether an error is bona fide under § 1002.112(b), the term ''data field'' generally refers to individual fields. However, with respect to information on the ethnicity and race of an applicant's principal owner, a data field group consists of more than one field. If one or more of the fields within an ethnicity or race field group have errors, they count as one (and only one) error for that data field group. For instance, in the ethnicity data field group, if an applicant indicates that one of its principal owners is Cuban, but the financial institution reports that the principal owner is Mexican and Puerto Rican, the financial institution has made errors in two fields within the ethnicity data field group for that principal owner. For purposes of the error threshold table in appendix H, the financial institution is deemed to have made one error. However, a financial institution that makes, for example, one error in the race data field group and one error in the ethnicity field group regarding a particular principal owner has made two errors for purposes of the error threshold table in appendix H.

3. *Tolerances and safe harbors.* An error that meets the criteria for one of the four safe harbor provisions in § 1002.112(c) is not counted as an error for purposes of determining whether a financial institution has exceeded the relevant error threshold in appendix H for a given data field.

*112(c) Safe harbors.*

1. *Information from a Federal agency—census tract.* Section 1002.112(c)(1) provides that an incorrect entry for census tract is not a violation of the Act or subpart B of this part, if the financial institution obtained the census tract using a geocoding tool provided by the FFIEC or the Bureau. However, this safe harbor provision does not extend to a financial institution's failure to provide the correct census tract number for a covered application on its small business lending application register, as required by § 1002.107(a)(13), because the FFIEC or Bureau geocoding tool did not return a census tract for the address provided by the financial institution. In addition, this safe harbor provision does not extend to a census tract error that results from a financial institution entering an inaccurate address into the FFIEC or Bureau geocoding tool.

2. *Applicability of NAICS code safe harbor.* A financial institution is permitted to rely on an applicant's representations or on other information regarding the NAICS code as described in comments 107(a)(15)–3 and –4. The safe harbor in § 1002.112(c)(2) applies when a financial institution does not rely on such information, but instead the financial institution identifies the NAICS code for an applicant and the NAICS code is incorrect. Where the incorrect NAICS code entry is due to an unintentional error, the safe harbor in § 1002.112(c)(2) may apply in addition to the bona fide error provision in § 1002.112(b), provided its requirements are met.

* * * * *

Dated: August 31, 2021.

**David Uejio,**

*Acting Director, Bureau of Consumer Financial Protection.*

[FR Doc. 2021–19274 Filed 9–30–21; 4:15 pm]

**BILLING CODE 4810–25–P**

# FEDERAL REGISTER

Vol. 86 Friday,

No. 193 October 8, 2021


Part III

## Department of Energy

10 CFR Parts 429 and 430

Energy Conservation Program: Test Procedure for Clothes Dryers; Final Rule

**DEPARTMENT OF ENERGY**

**10 CFR Parts 429 and 430**

**[EERE–2014–BT–TP–0034]**

**RIN 1904–AD46**

## Energy Conservation Program: Test Procedure for Clothes Dryers

**AGENCY:** Office of Energy Efficiency and Renewable Energy, Department of Energy.

**ACTION:** Final rule.

**SUMMARY:** On July 23, 2019, the U.S. Department of Energy (''DOE'') issued a notice of proposed rulemaking (''NOPR'') to amend the test procedure for clothes dryers. That proposed rulemaking serves as the basis for the final rule. Specifically, this final rule specifies additional detail for various provisions within the test procedures; specifies rounding requirements for all reported values; applies consistent use of nomenclature and corrects typographical errors; and removes obsolete sections of the test procedures, including an appendix in its entirety.

**DATES:** The effective date of this rule is November 8, 2021. Representations made on or after April 6, 2022 with respect to the energy use or energy efficiency of clothes dryers manufactured on or after January 1, 2015, must be based on testing conducted in accordance with this rule. The incorporation by reference of certain material listed in the rule is approved by the Director of the Federal Register on November 8, 2021. The incorporation by reference of other material listed in this rulemaking was approved by the Director of the Federal Register on September 13, 2013.

**ADDRESSES:** The docket, which includes **Federal Register** notices, public meeting attendee lists and transcripts, comments, and other supporting documents/materials, is available for review at *www.regulations.gov.* All documents in the docket are listed in the *www.regulations.gov* index. However, some documents listed in the index, such as those containing information that is exempt from public disclosure, may not be publicly available.

A link to the docket web page can be found at *www.regulations.gov/docket?D=EERE-2014-BT-TP-0034.* The docket web page contains instructions on how to access all documents, including public comments, in the docket.

For further information on how to review the docket contact the Appliance and Equipment Standards Program staff at (202) 287–1445 or by email: *ApplianceStandardsQuestions@ee.doe.gov.*

**FOR FURTHER INFORMATION CONTACT:** Mr. Bryan Berringer, U.S. Department of Energy, Office of Energy Efficiency and Renewable Energy, Building Technologies Office, EE–2J, 1000 Independence Avenue SW, Washington, DC 20585–0121. Telephone: (202) 586–0371. Email: *ApplianceStandardsQuestions@ee.doe.gov.*

Mr. Matthew Ring, U.S. Department of Energy, Office of the General Counsel, GC–33, 1000 Independence Avenue SW, Washington, DC 20585–0121. Telephone: (202) 586–2555. Email: *Matthew.Ring @hq.doe.gov.*

**SUPPLEMENTARY INFORMATION:** DOE maintains a previously approved incorporation by reference and incorporates by reference the following industry standard into part 430:

International Electrotechnical Commission (''IEC'') Standard 62301, ''Household electrical appliances-Measurement of standby power'', (Edition 2.0, 2011–01).

Copies of IEC 62301 can be obtained from the International Electrotechnical Commission webstore, by going to *https://webstore.iec.ch.*

American Standards Institute (''ANSI'')/Association of Home Appliance Manufacturers (''AHAM'') HLD–1–2010 (''AHAM HLD–1''), Household Tumble Type Clothes Dryers, approved 2010.

Copies of ANSI/AHAM HLD–1–2010 can be obtained from the Association of Home Appliance Manufacturers at 1111 19th Street NW, Suite 402, Washington, DC 20036, 202–872–5955, or go to *www.aham.org.*

For a further discussion of these standards, see section IV.N.

### Table of Contents

I. Authority and Background
A. Authority
B. Background
II. Synopsis of the Final Rule
III. Discussion
A. Scope of Coverage
B. Definitions
C. Test Setup
1. ''Connected'' Clothes Dryers
2. Dryness Level Selection for Automatic Termination Control Dryers
3. Drum Capacity Measurement
4. Test Room Conditions
5. Maintaining Burner Rating for Gas Clothes Dryers
6. Gas Pressure Tolerance and Measurement
7. Water Conductivity
D. Test Conduct
1. Test Conditions and Consumer Usage Patterns
2. Inactive and Off Mode Power Measurements
3. General Test Procedure Provisions at 10 CFR 430.23(d)
4. Rounding Requirements for Reported Values
5. Optional Usage of Appendix D1 or Appendix D2
6. Cycle Time Reporting
E. Formatting Changes and Typographical Errors
1. ''Conventional'' and ''Vented'' Nomenclature
2. Symbol Definitions
3. Removal of Duplicate Instructions for Test Load Preparation
4. Typographical Errors
5. Removal of Obsolete Provisions
F. Removing Obsolete Appendix D
G. Test Procedure Costs and Impact
1. Maintaining Hourly Btu Rating for Gas Clothes Dryers
2. Final Moisture Content Requirement
3. Additional Amendments
H. Harmonization With Industry Standards
I. Effective and Compliance Dates
IV. Procedural Issues and Regulatory Review
A. Review Under Executive Order 12866
B. Review Under the Regulatory Flexibility Act
C. Review Under the Paperwork Reduction Act of 1995
D. Review Under the National Environmental Policy Act of 1969
E. Review Under Executive Order 13132
F. Review Under Executive Order 12988
G. Review Under the Unfunded Mandates Reform Act of 1995
H. Review Under the Treasury and General Government Appropriations Act, 1999
I. Review Under Executive Order 12630
J. Review Under Treasury and General Government Appropriations Act, 2001
K. Review Under Executive Order 13211
L. Review Under Section 32 of the Federal Energy Administration Act of 1974
M. Congressional Notification
N. Description of Materials Incorporated by Reference
V. Approval of the Office of the Secretary

## I. Authority and Background

Clothes dryers are included in the list of ''covered products'' for which the DOE is authorized to establish and amend energy conservation standards and test procedures. (42 U.S.C. 6292(a)(8)) DOE's energy conservation test procedures for clothes dryers are currently prescribed in the Code of Federal Regulations (''CFR'') at 10 CFR part 430, subpart B, appendix D1 and appendix D2 (''appendix D1'' and ''appendix D2'', respectively). The following sections discuss DOE's authority to establish test procedures for clothes dryers and relevant background information regarding DOE's consideration of test procedures for this product.

*A. Authority*

The Energy Policy and Conservation Act, as amended (''EPCA''),[1] authorizes DOE to regulate the energy efficiency of a number of consumer products and certain industrial equipment. (42 U.S.C. 6291–6317) Title III, Part B [2] of EPCA established the Energy Conservation Program for Consumer Products Other Than Automobiles, which sets forth a variety of provisions designed to improve energy efficiency. These products include clothes dryers, the subject of this document. (42 U.S.C. 6292(a)(8))

The energy conservation program under EPCA consists essentially of four parts: (1) Testing, (2) labeling, (3) Federal energy conservation standards, and (4) certification and enforcement procedures. Relevant provisions of EPCA specifically include definitions (42 U.S.C. 6291), test procedures (42 U.S.C. 6293), labeling provisions (42 U.S.C. 6294), energy conservation standards (42 U.S.C. 6295), and the authority to require information and reports from manufacturers (42 U.S.C. 6296).

The testing requirements consist of test procedures that manufacturers of covered products must use as the basis for (1) certifying to DOE that their products comply with the applicable energy conservation standards adopted under EPCA (42 U.S.C. 6295(s)), and (2) making representations about the efficiency of those products (42 U.S.C. 6293(c)). Similarly, DOE must use these test procedures to determine whether the products comply with any relevant standards promulgated under EPCA. (42 U.S.C. 6295(s))

Federal energy efficiency requirements for covered products established under EPCA generally supersede State laws and regulations concerning energy conservation testing, labeling, and standards. (42 U.S.C. 6297) DOE may, however, grant waivers of Federal preemption for particular State laws or regulations, in accordance with the procedures and other provisions of EPCA. (42 U.S.C. 6297(d))

Under 42 U.S.C. 6293, EPCA sets forth the criteria and procedures DOE must follow when prescribing or amending test procedures for covered products. EPCA provides that any test procedures prescribed or amended under this section shall be reasonably designed to produce test results which measure energy efficiency, energy use or estimated annual operating cost of a covered product during a representative average use cycle or period of use and shall not be unduly burdensome to conduct. (42 U.S.C. 6293(b)(3))

EPCA also requires that, at least once every 7 years, DOE evaluate test procedures for each type of covered product, including clothes dryers, to determine whether amended test procedures would more accurately or fully comply with the requirements for the test procedures to not be unduly burdensome to conduct and be reasonably designed to produce test results that reflect energy efficiency, energy use, and estimated operating costs during a representative average use cycle or period of use. (42 U.S.C. 6293(b)(1)(A)) If the Secretary determines, on his own behalf or in response to a petition by any interested person, that a test procedure should be prescribed or amended, the Secretary shall promptly publish in the **Federal Register** proposed test procedures and afford interested persons an opportunity to present oral and written data, views, and arguments with respect to such procedures. The comment period on a proposed rule to amend a test procedure shall be at least 60 days and may not exceed 270 days. In prescribing or amending a test procedure, the Secretary shall take into account such information as the Secretary determines relevant to such procedure, including technological developments relating to energy use or energy efficiency of the type (or class) of covered products involved. (42 U.S.C. 6293(b)(2)) If DOE determines that test procedure revisions are not appropriate, DOE must publish its determination not to amend the test procedures. DOE is publishing this final rule in satisfaction of the 7-year review requirement specified in EPCA. (42 U.S.C. 6293(b)(1)(A))

In addition, EPCA requires that DOE amend its test procedures for all covered products to integrate measures of standby mode and off mode energy consumption into the overall energy efficiency, energy consumption, or other energy descriptor, unless the current test procedure already incorporates the standby mode and off mode energy consumption, or if such integration is technically infeasible. (42 U.S.C. 6295(gg)(2)(A)) If an integrated test procedure is technically infeasible, DOE must prescribe separate standby mode and off mode energy use test procedures for the covered product, if a separate test is technically feasible. (*Id.*) Any such amendment must consider the most current versions of the IEC 62301 [3] and IEC Standard 62087 [4] as applicable. (42 U.S.C. 6295(gg)(2)(A))

*B. Background*

DOE's test procedures for clothes dryers manufactured on or after January 1, 2015 appear at appendix D1 and appendix D2. Manufacturers must use either appendix D1 or appendix D2 to show compliance with the applicable energy conservation standards, and must use a single appendix for all representations, including certifications of compliance.

In its most recent test procedure rulemaking for clothes dryers, DOE published a final rule on August 14, 2013 (''August 2013 Final Rule''), amending the clothes dryer test procedure, in which it (1) amended appendix D1 to update the reference to the latest edition of IEC Standard 62301, ''Household electrical appliances—Measurement of standby power,'' Edition 2.0 2011–01 (''IEC Standard 62301''); [5] (2) amended appendix D and appendix D1 to clarify the cycle settings used for the test cycle, the requirements for the gas supply for gas clothes dryers, the installation conditions for console lights, the method for measuring the drum capacity, the maximum allowable weighing scale range, and the allowable use of a relative humidity (''RH'') meter; and (3) established a new appendix D2 that includes procedures reflecting the amendments discussed above as well as testing methods for measuring the effects of automatic cycle termination. 78 FR 49608. (For additional background on the rulemaking history for clothes dryer test procedures, please refer to the August 2013 Final Rule).

DOE published a notice of public meeting (''NOPM'') on October 23, 2014 (''October 2014 NOPM''), and held the public meeting on November 13, 2014 to facilitate a discussion among interested parties about potential changes to the DOE clothes dryer test procedures to produce test results that measure energy use during a representative average use cycle without being unduly burdensome to conduct.[6] 79 FR 63336.

On July 23, 2019, DOE published a NOPR (''July 2019 NOPR'') proposing amendments to the test procedures for

[1] All references to EPCA in this document refer to the statute as amended through the Energy Act of 2020, Public Law 116–260 (Dec. 27, 2020).

[2] For editorial reasons, upon codification in the U.S. Code, Part B was redesignated Part A.

[3] IEC 62301, *Household electrical appliances—Measurement of standby power.* (Edition 2.0, 2011–01).

[4] IEC 62087, *Methods of measurement for the power consumption of audio, video, and related equipment* (Edition 3.0, 2011–04).

[5] IEC Standard 62301 is available online at *https://webstore.iec.ch/publication/6789.*

[6] A transcript of the public meeting and submitted comments are available in the docket for this rulemaking at *www.regulations.gov/docket?D=EERE-2014-BT-TP-0034.*

clothes dryers to provide additional direction in response to questions from manufacturers and test laboratories. 84 FR 35484. DOE also proposed amendments to: (1) Specify rounding requirements for all reported values; (2) apply consistent use of nomenclature and correct typographical errors; and (3) remove obsolete sections of the test procedures, including appendix D. *Id.* DOE also requested comment from interested parties on issues such as consumer usage patterns and ''connected'' clothes dryer features. *Id.* The July 2019 NOPR also announced a webinar to be held on August 14, 2019, and stated that DOE would hold a public meeting to discuss the proposals if one was requested by August 6, 2019. *Id.*

On July 29, 2019, DOE received a comment from the Northwest Energy Efficiency Alliance (''NEEA''), the Natural Resources Defense Council (''NRDC''), and Pacific Gas and Electric Company (''PG&E'') requesting that DOE hold an in-person public meeting regarding the proposed amendments to the clothes dryers test procedures.[7] On August 2, 2019, DOE issued a pre-publication **Federal Register** notification announcing a public meeting and webinar to be held on August 28, 2019, and cancelled the previously announced webinar scheduled for August 14, 2019. 84 FR 39777.

On August 2, 2019, and August 5, 2019, DOE received subsequent comments from the AHAM requesting to move the webinar and public meeting into September 2019.[8] On August 21, 2019, DOE published a notification in the **Federal Register** changing the public meeting from August 28, 2019, to September 17, 2019, and extending the public comment period for submitting comments and data on the July 2019 NOPR by 14 days to October 7, 2019. 84 FR 43529.

On September 20, 2019, DOE received a comment from NEEA, NRDC, and PG&E requesting an additional 60-day comment period extension.[9] DOE extended the comment period by 30 days to November 6, 2019. 84 FR 52817 (October 3, 2019).

DOE received comments in response to the July 2019 NOPR from the interested parties listed in Table II.1.

TABLE II.1—WRITTEN COMMENTS RECEIVED IN RESPONSE TO JULY 2019 NOPR

| Commenter(s) | Reference in this final rule | Commenter type |
|---|---|---|
| Appliance Standards Awareness Project, American Council for an Energy-Efficient Economy, Alliance to Save Energy, Natural Resources Defense Council, Consumer Federation of America, National Consumer Law Center. | Joint Commenters | Efficiency Organizations. |
| California Energy Commission | CEC | Efficiency Organization, |
| Consortium for Energy Efficiency | CEE | Efficiency Organization. |
| National Resources Defense Council | NRDC | Efficiency Organization. |
| Northwest Energy Efficiency Alliance | NEEA | Efficiency Organization. |
| Association of Home Appliance Manufacturers | AHAM | Trade Association. |
| BSH Home Appliances Corporation | BSH | Manufacturer. |
| GE Appliances, a Haier Company | GEA | Manufacturer. |
| Samsung Electronics America | Samsung | Manufacturer. |
| Whirlpool Corporation | Whirlpool | Manufacturer. |
| Pacific Gas and Electric, Southern California Edison, San Diego Gas and Electric. | California IOUs | Investor-Owned Utilities (''IOUs''). |

**Note:** DOE received other comments outside the scope of the July 2019 NOPR and therefore are not addressed in this final rule.

## II. Synopsis of the Final Rule

In this final rule, DOE amends appendix D1 and appendix D2, both entitled ''Uniform Test Method for Measuring the Energy Consumption of Clothes Dryers,'' to provide additional detail in response to questions from manufacturers and test laboratories, including additional detail regarding the testing of ''connected' models, dryness level selection, and the procedures for maintaining the required heat input rate for gas clothes dryers; additional detail for the test procedures for performing inactive and off mode power measurements; specifications for the final moisture content (''FMC'') required for testing automatic termination control dryers; specification of a narrower scale resolution for the weighing scale used to determine moisture content of test loads; and specification that the test load must be weighed within 5 minutes after a test cycle has terminated. In addition, DOE amends the test procedures to update the estimated number of annual use cycles for clothes dryers; provide further direction for additional provisions within the test procedures; specify rounding requirements for all reported values; apply consistent use of nomenclature and correct typographical errors; remove obsolete sections of the test procedures, including appendix D; and update the reference to the applicable industry test procedure to the version certified by ANSI.

DOE's actions are summarized in Table II.2 and addressed in detail in section III of this final rule.

TABLE II.2—SUMMARY OF CHANGES IN THE AMENDED TEST PROCEDURE

| Previous DOE test procedure | Amended test procedure | Attribution |
|---|---|---|
| Does not explicitly address the required configuration for network-connected functionality. | Specifies that clothes dryers with connected functionality shall be tested with the network-connected functions in the ''off'' position if it can be disabled by the end-user; otherwise test in the factory default setting. | Response to test laboratory comment. |

[7] See document number 17 within docket EERE–2014–BT–TP–0034, available on *www.regulations.gov.*

[8] See document numbers 18 and 19 within docket EERE–2014–BT–TP–0034, available on *www.regulations.gov.*

[9] See document number 22 within docket EERE–2014–BT–TP–0034, available on *www.regulations.gov.*

TABLE II.2—SUMMARY OF CHANGES IN THE AMENDED TEST PROCEDURE—Continued

| Previous DOE test procedure | Amended test procedure | Attribution |
|---|---|---|
| Silent on selection of the middle dryness level setting for clothes dryers with an even number of settings. | Specifies using either the next-highest setting above or next-lowest setting below the midpoint if an even number of discrete settings are provided. | Response to test laboratory comment. |
| Provides adjustments that can be made to maintain the required heat input rate for gas clothes dryers. | Specifies the order of adjustment, from least burdensome to most burdensome, for adjustments that can be made to maintain the required heat input rate for gas clothes dryers. | Response to test laboratory question. |
| Does not specify how quickly a test load must be weighed after a test cycle has terminated. | Specifies that test load must be weighed within 5 minutes after a test cycle has terminated. | Response to NOPR comments to improve repeatability and reproducibility. |
| Specifies the use of a spray bottle for achieving the initial moisture content in appendix D2 only. | Specifies the use of a spray bottle for achieving the initial moisture content in both appendix D1 and appendix D2. | Response to NOPR comments. |
| Specifies weighing scale resolution of 0.2 ounces (0.01 pounds) to determine moisture content of test loads. | Specifies a narrower weighing scale resolution of 0.001 pounds to determine moisture content of test loads. | Response to NOPR comments to improve repeatability and reproducibility. |
| Uses the term ''moisture content'' to refer to several different measurements of moisture content throughout testing. | Defines new terms ''initial moisture content'' and ''final moisture content'' to differentiate moisture content measurements during testing and calculations. | Response to NOPR comments. |
| Estimates the number of annual use cycles for clothes dryer as 283, based on 2005 survey data, for the purposes of calculating the per-cycle standby mode and off mode energy consumption calculation. | Updates the estimate to 236 clothes dryer cycles per year in appendix D2, based on the latest available 2015 survey data. | Response to industry comment. |
| Requires distinction between standby mode and off mode based on control panel functionality that may not be readily apparent to a third-party tester. | Provides specific procedures for measuring the low-power modes of a clothes dryer based on observable characteristics of the controls. | Response to test laboratory comment. |
| Does not explicitly provide the FMC requirement for subsequent test runs if the prior run was deemed invalid. | Specifies that the requirement to achieve a final dryness level of 2 percent or less also applies to any subsequent run, if required. | Response to industry comment. |
| Does not include instructions for calculating annual operating cost, combined energy factor ''CEF'', and other measures for clothes dryers optionally tested using appendix D2; does not include a calculation for annual energy consumption. | Adds instructions for calculating annual operating cost and CEF using appendix D2; adds annual energy consumption calculation using either appendix D1 or D2. | To provide consistency between appendices D1 and D2. |
| Does not specify rounding requirements for reported values. | Specifies rounding requirements for all reported values. | To further specify reporting requirements. |
| Contains nomenclature and formatting inconsistencies and typographical errors. | Applies consistent use of nomenclature, improves formatting, and fixing typographical errors. | To improve accuracy and readability. |
| References industry standard AHAM HLD–1–2009. | Updates reference to the ANSI-certified version of AHAM HLD–1–2009, ANSI/AHAM HLD–1–2010. | Harmonization with industry standard. |

The Director of the Federal Register previously approved the following standard from IEC for incorporation by reference into appendix D1 and appendix D2: IEC 62301, ''Household electrical appliances-Measurement of standby power'', (Edition 2.0, 2011–01). The Director of the Federal Register approved the following standard from AHAM for incorporation by reference into appendix D1 and appendix D2: ANSI/AHAM HLD–1–2010, ''Household Tumble Type Clothes Dryers.''

As described in section III.G of this document, DOE has determined that the amendments described in section III and adopted in this document, other than the amendment to the number of annual use cycles in appendix D2, will not substantively alter the measured efficiency of clothes dryers, and that the test procedures will not be unduly burdensome to conduct. The amendment to the number of annual use cycles specified for calculating per-cycle standby mode and off mode energy consumption would alter the measured energy efficiency of clothes dryers when using appendix D2, but use of the amended value in appendix D2 is not required until such time as DOE were to amend the energy conservations standards accounting for such changes in the test procedure, should such amended energy conservation standards be adopted. Discussion of DOE's actions are addressed in detail in section III of this document.

The effective date for the amended test procedures adopted in this final rule is 30 days after publication of this document in the **Federal Register**. Representations of energy use or energy efficiency of clothes dryers must be based on testing in accordance with the amended test procedures beginning 180 days after the publication of this final rule. Manufacturers must use the test procedures in either appendix D1 or appendix D2 to demonstrate compliance with the current energy conservation standards for clothes dryers. Manufacturers must use a single appendix for all representations for a given model, including certifications of compliance, and may not use appendix D1 for certain representations and

appendix D2 for other representations for that model.

## III. Discussion

### *A. Scope of Coverage*

DOE's clothes dryer test procedures are applicable to both electric and gas clothes dryers. DOE regulations define ''electric clothes dryer'' and ''gas clothes dryer'' similarly as a cabinet-like appliance designed to dry fabrics in a tumble-type drum with forced air circulation, with blower(s) driven by an electric motor(s) and either electricity or gas, respectively, as the heat source. 10 CFR 430.2. DOE did not propose to amend the scope of applicability of DOE's clothes dryer test procedures in the July 2019 NOPR. 84 FR 35484, 35487 (July 23, 2019).

AHAM agreed with DOE's proposal to not change the scope of applicability of DOE's clothes dryer test procedures. (AHAM, No. 33 at p. 2) [10] DOE received no other comments on the scope of the test procedure.

DOE is not amending the scope of applicability of DOE's clothes dryer test procedures in this final rule.

### *B. Definitions*

Section 1.13 of appendix D1 and section 1.14 of appendix D2 define the term ''moisture content'' as the ratio of the weight of water contained by the test load to the bone-dry weight of the test load, expressed as a percent. Throughout appendix D1 and appendix D2, the term ''moisture content'' is used in some instances to refer to the moisture content of the wet load (*i.e.,* before initiating the drying cycle), whereas in other instances the term is used to refer to the moisture content of the dry load (*i.e.,* immediately after completion of the drying cycle). AHAM suggested using distinct terms and associated acronyms to clarify the difference. Specifically, AHAM suggested the following:

Initial moisture content (''IMC'') means the ratio of the weight of water with the damp test load (prior to drying cycle) to the bone-dry weight of the test load, expressed as a percent.

Final moisture content (''FMC'') means the ratio of the weight of water with the final test load (after drying cycle) to the bone-dry weight of the test load, expressed as a percent. (AHAM, No. 33 at p. 11)

DOE has determined that adding definitions for ''initial moisture content'' and ''final moisture content'' will appropriately distinguish the relevant moisture content terms throughout both appendix D1 and appendix D2. This change in nomenclature does not substantively change the test procedure in appendix D1 or appendix D2. DOE is therefore amending appendix D1 and appendix D2 to adopt these definitions, with non-substantive wording changes to maintain consistent phrasing with the current definition of ''moisture content.'' Additionally, DOE uses the adopted terminology and acronyms throughout this final rule to provide clarity.

### *C. Test Setup*

#### 1. ''Connected'' Clothes Dryers

Numerous ''connected'' clothes dryer models are currently on the market from multiple major manufacturers. These products offer wireless network connectivity to enable features such as remote monitoring and control via smartphone, as well as demand response features [11] available through partnerships with a small number of local electric utilities. DOE observes there are currently a variety of implementations of these connected features (*i.e.,* wireless hardware, connection setup, and wireless control and programing features) across different brands, and that the design and operation of these features is continuously evolving as the market continues to grow for these products.

If connected features on a clothes dryer affect its standby mode power consumption in the as-shipped configuration (*e.g.,* by energizing a wireless communication chip on the circuit board by default), such impact would have been measured by the previous test procedure provisions in section 3.6 of appendix D1 and appendix D2 for measuring standby mode and off mode power. Whereas, if the standby power consumption is not affected unless the consumer actively enables the connected functionality on the unit, any incremental standby power consumption resulting from the connected features would not have been measured by the prior test procedure, because the test procedure did not include instructions for activating any such features before performing the standby mode and off mode measurement. Similarly, any incremental energy consumption in active mode, or any other modes of operation impacted by the product's connected features, would not have been measured as part of the prior DOE test procedure, because the test cycle requirements within section 3.3 of appendix D1 and appendix D2 did not include instructions for activating any such features before performing the active mode drying cycle measurements.

To ensure the repeatability and comparability of test results between models, especially those with connected functionality, DOE proposed in the July 2019 NOPR to specify in section 3.3 of appendix D1, and sections 3.3.1 and 3.3.2 of appendix D2, that units with network capabilities be tested with the network-connected functions disabled throughout testing. 84 FR 35484, 35493–35494 (July 23, 2019).

AHAM supported DOE's proposal to conduct testing with connected features in the ''off'' position. AHAM noted that connected features operate with different capabilities and many have energy saving benefits to consumers. AHAM further commented that connected appliances can play a critical role in increasing the energy efficiency of the grid and can be used by utilities to increase demand response by peak load shifting as well as facilitate increased penetration of renewable sources of power. AHAM also stated that connected features are currently in the early stages of development, and meaningful data are currently unavailable on consumer use of connected features, as there has been limited market penetration. AHAM cautioned that regulating energy consumption associated with connected features could stifle this area of innovation and its potential energy savings benefits, stating that it is not yet fully known how consumers will use connected functionality and which features will be permanently available. Finally, AHAM noted that testing in the ''off'' position would be consistent with the refrigerator/freezer test procedure and asserted that doing so would recognize that this category of products is still developing, as is consumers' use and understanding of them. (AHAM, No. 33 at p. 8)

Whirlpool commented that incremental standby power consumption resulting from connected features should not be measured when the consumer is actively required to enable connected functionality (*i.e.,* connected functionality is not enabled in the as-shipped configuration). Whirlpool also asserted that if a

[10] A notation in the form ''AHAM, No. 33 at p. 2'' identifies a written comment: (1) Made by the Association of Home Appliance Manufacturers; (2) recorded in document number 33 that is filed in the docket of this test procedure rulemaking (Docket No. EERE–2014–BT–TP–0034) and available for review at *www.regulations.gov;* and (3) which appears on page 2 of document number 33.

[11] ''Demand response features'' refers to product functionality that can be controlled by the ''smart grid'' to improve the overall operation of the electrical grid, for example by reducing energy consumption during peak periods and/or shifting power consumption to off-peak periods.

connected feature is enabled in the as-shipped position but can be optionally disabled by the consumer with the provided manufacturer instructions, the feature should be disabled before testing. Whirlpool further commented, however, that if there is no means to power off the energized component that enables connected functionality, nor manufacturer instructions for powering it off, then this energy consumption should be measured. (Whirlpool, No. 32 at pp. 3–4)

The California IOUs, CEC, the Joint Commenters, and NEEA opposed testing clothes dryers with network-connected functions in the ''off'' position. (California IOUs, No. 29 at p. 20; CEC, No. 31 at p. 4; Joint Commenters, No. 34 at pp. 2–3; NEEA, No. 38 at p. 17)

The California IOUs commented that the ENERGY STAR qualified product list features five models sold in the United States that are certified as having connected features, and that Consumer Reports have tested approximately 50 clothes dryers with connected features—including 32 percent of the top 25-rated electric and gas standard-size clothes dryers and the top two compact-size clothes dryers—with the top three recommended dryers costing less than $800 having connected capabilities. The California IOUs stated that with this market penetration and the overall innovation and growth in the ''Internet of Things'' market, capturing the network-connected function energy usage is important. (California IOUs, No. 29 at p. 20)

CEC commented that if DOE requires network-connected functions to be in the ''off'' position for testing, the test procedure would fail to require measurement of energy consumption of these features, which may contribute significantly to standby mode and off mode energy consumption. Furthermore, CEC stated that DOE would have insufficient information to properly consider future energy conservation standard requirements for standby mode, as required by 42 U.S.C. 6295(gg), and adequate information may not be provided to consumers, depriving them of choice. (CEC, No. 21 at p. 4)

The Joint Commenters stated that without a measurement of network mode power consumption, consumers would have no information about the additional energy use associated with the connected functionality. The Joint Commenters encouraged DOE to measure the energy associated with network-connected functionality in order to better represent the energy consumption of connected clothes dryers. The Joint Commenters also noted that such a measurement would not impede innovation, since any amended standard could account for the additional energy use associated with network mode. (Joint Commenters, No. 34 at pp. 2–3)

While a number of connected clothes dryers are on the market with varying implementations of connected features, DOE is not aware of any data available, nor did interested parties provide any such data, regarding the consumer use of connected features. Therefore, DOE is unable to establish a representative test configuration for assessing the energy consumption of connected functionality for clothes dryers during an average period of use.

Furthermore, as noted, while DOE's prior test procedure did not explicitly require the measurement of energy use associated with any connected features, the previous test procedure, in its required measurement of standby mode and off mode power, may have captured the energy used by features that provide connected functionality. Specifically, any energy use of such connected features may have been measured in section 3.6 of appendix D1 and appendix D2 if manufacturers' instructions specify that the features be turned on, or if the connected functionality is enabled by default when the unit is powered on. If, however, a manufacturer does not provide such an instruction, and the product ships with connected features disabled, then such energy consumption would not have been measured under the prior test procedures.

Therefore, to ensure the repeatability and comparability of test results between models, especially those with connected functionality, DOE is adopting the July 2019 NOPR proposal regarding the network-connected function setting position. DOE is also providing additional detail on the direction to ''disable'' the network function during testing. The direction adopted in this final rule provides further specification that a network function is to be disabled as capable by the end user pursuant to instructions provided in the product's user manual.

DOE has determined that if network functionality cannot be disabled by the consumer and the manufacturer's user manual does not provide instruction for disabling the function, including the energy consumption of the enabled network function is more representative than excluding the energy consumption associated with the network function.

As such, in this final rule DOE is amending section 3.3 of appendix D1, and sections 3.3.1 and 3.3.2 of appendix D2, to provide that for units with network capabilities, the network settings must be disabled throughout testing if such settings can be disabled by the end-user and the product's user manual provides instructions on how to do so. Further, the amendments explicitly provide that if network settings cannot be disabled by the end-user, or the product's user manual does not provide instruction for disabling network settings, then the unit must be tested with the network settings in the factory default configuration for the test cycle.

Finally, CEE noted that its specification for clothes dryers includes optional connected criteria, which are designed to recognize units that enable new benefits to customers and the grid or energy systems in a diverse range of regulatory conditions (*e.g.,* load delay, load reduction, and energy reporting). CEE stated that connected products promoted with ratepayer funds should offer multiple pathways to connect, including an open, nonproprietary means for connecting within the physical bounds of the customer's home (*i.e.,* without requiring the use of a manufacturer's ''cloud''). CEE stated further that these key elements that need to be addressed are dependent on the pending ENERGY STAR test method to validate demand response being developed by DOE. CEE encouraged DOE to finalize the ENERGY STAR test method as soon as possible and stated that CEE is relying on manufacturer written submissions that stipulate compliance with the CEE connected criteria until the test method becomes available. (CEE, No. 27 at pp. 3–4)

DOE notes that this final rule addresses only whether network-connected functions are disabled during testing under appendix D1 and appendix D2, and does not address testing the demand response functionality of any such features. DOE further notes that this final rule is separate from the process under ENERGY STAR for validating demand response.

2. Dryness Level Selection for Automatic Termination Control Dryers

Section 3.3.2 of appendix D2 states that where the dryness level setting can be chosen independently of the program, it shall be set to the ''normal'' or ''medium'' dryness level setting. If such designation is not provided, then the dryness level is set at the mid-point between the minimum and maximum settings. DOE has received inquiries from third-party test laboratories regarding clothes dryers that have dryness settings such that a single mid-point between the minimum and maximum settings is not available (*e.g.,*

a clothes dryer with four dryness settings).

In the July 2019 NOPR, DOE proposed to specify in section 3.3.2 of appendix D2 that if an even number of discrete settings are provided, either the next-highest setting above the mid-point, in the direction of the maximum dryness setting, or the next-lowest setting below the mid-point, in the direction of the minimum dryness setting, is selected. 84 FR 35484, 35497 (July 23, 2019).

AHAM supported DOE's proposal to specify in appendix D2 that if an even number of discrete settings are provided, the next-highest setting above the mid-point, in the direction of the maximum dryness setting, or the next lowest setting below the mid-point, in the direction of the minimum dryness setting should be used. (AHAM, No. 33 at p. 9)

The California IOUs, Joint Commenters, Energy Solutions on behalf of the California IOUs (''Energy Solutions''), and NEEA recommended that DOE require that for clothes dryers that provide an even number of discrete settings that can be chosen independently of the drying program, the dryness level should be set to the next highest level above the mid-point between the minimum and maximum setting. (California IOUs, No. 29 at pp. 20 – 21; Energy Solutions, Public Meeting Transcript, No. 23 at p. 45; [12] Joint Commenters No. 34 at p. 3; NEEA, Public Meeting Transcript, No. 23 at pp. 45–46)

The California IOUs provided examples of two types of control panel configurations in which an even number of discrete dryness settings are provided. In one type, the clothes dryer includes a ''damp'' or very low dryness setting, for which the product manual identifies ''dry'' as the ''normal dryness setting'', which is one step above the mid-point. In the second type, the clothes dryer includes a four-step scale from ''less'' to ''more'' dry. The California IOUs further commented that in NEEA's 2014 Dryer Field Study,[13] (''2014 NEEA field study''), the ''less dry'' setting was used only 1 percent of the time, while ''normal'' and ''more dry'' were chosen 65 percent and 34 percent of the time, respectively. Based on this, the California IOUs stated that selecting the next highest setting from the mid-point would best represent an average use cycle for a clothes dryer with an even number of discrete dryness settings. (California IOUs, No. 29 at pp. 20 – 21) Energy Solutions commented that when four (or an even number of) settings are provided, typically the lowest is an air-dry feature that provides no additional drying, such that the order is air dry, low, medium, and high. Energy Solutions stated that the intention is not to have the setting set to low dryness (*i.e.,* the next-lowest setting from the mid-point); but rather, the intention is to have the setting set to medium (*i.e.,* the next-highest setting). (Energy Solutions, Public Meeting Transcript, No. 23 at p. 45)

NEEA asserted that using the next-highest setting would reduce test burden, as it would decrease the likelihood that the clothes dryer would be unable to reach the required remaining moisture content requirement and thus need to be retested. Further, NEEA commented that DOE should removing ambiguity by providing definitive guidance one way or the other, rather than allowing the laboratory to select either the next-highest or next-lowest setting. (NEEA, Public Meeting Transcript, No. 23 at pp. 45–46)

BSH recommended that if a clothes dryer's controls have an even number of dryness level settings and therefore do not have a mid-point that can be selected, the dryness level should be set at the next-lower set point below the mid-point. (BSH, No. 30 at pp. 3–4)

As stated, the previous test procedure did not provide direction as to the setting to select if the clothes dryer provides an even number of dryness settings, none of which are labeled as ''normal'' or ''medium.'' To address testing of a clothes dryer with such a configuration, DOE is adopting the direction as proposed. The direction to select either the next-highest setting above the mid-point, or the next-lowest setting below the mid-point, preserves the flexibility of manufacturers to assign the number and dryness level of settings available on a unit. For example, a manufacturer may assign the second of four settings as the selection most closely equivalent to the ''normal'' dryness setting. In such an instance, it would not be appropriate to require selecting the next-highest above the mid-point. Additionally, a manufacturer would not be able to select a setting that did not achieve a valid test cycle (*i.e.,* an FMC of 2 percent or less, as required by section 3.3.2 of appendix D2, which is representative of the consumer-accepted dryness level, as described further in section III.D.1.e.iii of this document). As such, a manufacturer would not be able to select the next-lowest setting below the mid-point if such setting did not provide the necessary dryness level. Furthermore, while the 2014 NEEA field study presents a percentage of cycle usage by dryness setting, the data are limited to three dryness settings (''less dry'', ''normal'', and ''more dry'') and therefore do not provide insight into the frequency of dryness settings selected for clothes dryers with an even number of cycle dryness settings.

Given the considerations above, DOE is amending section 3.3.2 of appendix D2 to state that either the next-highest dryness setting above the mid-point or the next-lowest dryness setting below the mid-point may be tested. Section 3.4.7 of appendix D2 (which is not amended by this final rule) requires recording for each test cycle the cycle settings selected, in accordance with section 3.3.2 of appendix D2. The certification reporting requirements for clothes dryers at 10 CFR 429.21(b)(2) require a certification report to include, for products tested using appendix D2, a list of the cycle setting selections for the energy test cycle as recorded in section 3.4.7 of appendix D2. This reporting requirement is unchanged by this final rule. DOE notes that the settings used for appendix D2 certification are publicly available through DOE's compliance certification database.[14]

3. Drum Capacity Measurement

Section 3.1 of appendix D1 and appendix D2 requires measurement of drum capacity by filling the drum with water and using the weight of water in the drum to determine the drum volume. Clothes dryer drum capacity is reported by manufacturers in cubic feet (10 CFR 429.21(b)(2)) and is used to distinguish between compact-size and standard-size clothes dryer product classes. See appendix D1, sections 1.6 and 1.16; appendix D2, sections 1.7 and 1.17.

a. Alternative Drum Capacity Measurement Method

NEEA suggested that, to reduce test burden, the current drum measurement

[12] A notation in the form ''Energy Solutions, Public Meeting Transcript, No. 23 at p. 45'' identifies an oral comment that DOE received on September 17, 2019 during the public meeting, and was recorded in the public meeting transcript in the docket for this test procedure rulemaking (Docket No. EERE–2014–BT– TP–0034). This particular notation refers to a comment (1) made by Energy Solutions during the public meeting; (2) recorded in document number 23, which is the public meeting transcript that is filed in the docket of this test procedure rulemaking; and (3) which appears on page 45 of document number 23.

[13] The 2014 NEEA field study surveyed clothes dryer usage patterns of 50 households in the Pacific Northwest region. The report is available in the docket for this rulemaking at: *www.regulations.gov/document?D=EERE-2014-BT-TP-0034-0010.*

[14] DOE's compliance certification database for appendix D2 is available at *www.regulations.doe.gov/certification-data/CCMS-4-Clothes_Dryers_-_Appendix_D2.html.*

approach could be replaced with the tape measurement method used in a draft California Commercial Tumble Dryer Test Protocol.[15] NEEA described this method as taking physical measurements with a standard tape measure and calipers, and using a formula to compute the volume. NEEA noted that although the tape measurement method is expected to be less precise than the water measurement method, precision is less important, in NEEA's opinion, when drum capacities clearly fall within the range for compact-size or standard-size product classes. NEEA further proposed that the water measurement method could be retained for clothes dryers with drum volumes that are near the product class drum volume threshold. Finally, NEEA stated that the current water measurement method completed by a third-party laboratory can cost up to $500 to perform. (NEEA, No. 38 at p. 17)

Upon reviewing the draft California Commercial Tumble Dryer Test Protocol, DOE noted that the tape measurement/caliper method suggested by NEEA is only used to measure drum capacities for commercial clothes dryers with drum volumes greater than 9.5 cubic feet according to the California Commercial Tumble Dryer Test Protocol. Under the California draft, a water volume measurement method, similar to that in the DOE test procedures at appendix D1 and appendix D2, would still be required for clothes dryers with reported drum capacity less than 9.5 cubic feet. Nonetheless, DOE investigated the accuracy and effectiveness of the California Commercial Tumble Dryer Test Protocol tape measurement/caliper method for consumer clothes dryers, particularly those with rated drum capacities less than 9.5 cubic feet, by comparing the drum capacity resulting from the tape measurement/caliper method to the rated drum capacity, which is determined based on the water volume drum capacity approach in the DOE test procedures. DOE conducted the tape measurement/caliper method of the California Commercial Tumble Dryer Test Protocol on three compact-size and two standard-size clothes dryers, and compared the resulting values to the rated drum capacity. The results of this investigation are presented in Table III.1.

TABLE III.1—DRUM CAPACITY MEASUREMENT INVESTIGATION

| Test unit | Rated drum capacity ($ft^3$) | Measured drum capacity ($ft^3$) | Percent difference |
|---|---|---|---|
| 1 | 2.8 | 2.67 | −4.5 |
| 2 | 3.6 | 3.63 | 0.7 |
| 3 | 4.0 | 3.87 | −2.8 |
| 4 | 5.1 | 5.13 | 0.6 |
| 5 | 7.4 | 7.32 | −1.1 |

The results in Table III.1 show a range of differences between the two methods (from –4.5 percent to +0.6 percent), which DOE attributes to the inherently less precise nature of the California Commercial Tumble Dryer Test Protocol, including the inherent variability in measuring irregular contours within the drum. Under the California Commercial Tumble Dryer Test Protocol, test technicians are instructed to approximate any irregular volumes. The tape measurement/caliper method from the California Commercial Tumble Dryer Test Protocol is designed for measuring the capacity of larger drums associated with commercial clothes dryers, for which the variability in approximating irregular volumes has lesser relative impact on drum capacity measurements; however, for smaller consumer clothes dryers, these approximations may have more significant impacts on reported drum capacity.

The results of the tape measurement/caliper method investigative testing demonstrate that the draft California Commercial Tumble Dryer Test Protocol could yield capacity measurement values that differ by up to 5 percent from the current drum capacity measurement method in the DOE test procedures. While a difference of this magnitude could potentially be acceptable for large-capacity clothes dryers that are clearly above the 4.4 cubic foot threshold that differentiates the standard and compact consumer clothes dryer product classes, further investigation and analysis would be required to better understand the implications of using the tape measurement/caliper method for consumer clothes dryers, and to determine the range of capacities for which the tape measurement/caliper method could be appropriate for use as an alternative to the water volume drum capacity approach. DOE does not have sufficient information at this time with which to implement such an alternative capacity measurement method. Therefore, DOE is not amending appendix D1 and appendix D2 at this time to include a tape measurement method for determining consumer clothes dryer drum capacity.

b. Drum Capacity Measurement Water Temperature

The clothes dryer test procedures do not specify a temperature for the water used in the drum capacity test. AHAM proposed that DOE establish water temperature requirements in appendix D1 and appendix D2 that align with section 3.1.4 of the clothes washer test procedure located in 10 CFR part 430, subpart B, appendix J2 (''appendix J2''), which requires either 60 degrees Fahrenheit (''°F'') ±5 °F (15.6 degrees Celsius (''°C'') ±2.8 °C) or 100 °F ±10 °F (37.8 °C ±5.5 °C) water. (AHAM No. 33 at p. 12)

DOE recognizes that water density varies based on water temperature. Section 3.1.6 of appendix J2 specifies using a water density of 62.3 pounds per cubic foot ($lb/ft^3$) for 60 °F water or 62.0 $lb/ft^3$ for 100 °F water. For the clothes washer test procedure, specifying the temperature of the water is necessary because the volume of the clothes container must be determined to the nearest 0.01 cubic feet for the purpose of determining test load sizes. (Section 3.1.7 of appendix J2) Whereas, DOE is not aware of any instance, and commenters have provided none, in which this degree of precision is required for the clothes dryer test procedure. For this reason, DOE is not amending appendix D1 and appendix D2 to specify the water temperature during the drum capacity test.

[15] California Commercial Tumble Dryer Test Protocol 2017 proposal; *https://efiling.energy.ca.gov/GetDocument.aspx?tn=219983&DocumentContentId=26567.*

4. Test Room Conditions

Section 2.2.1 of appendix D1 and appendix D2 specify maintaining the test chamber ambient air temperature at 75 ±3 °F and a room RH of 50 ±10 percent.

The California IOUs and AHAM recommended that DOE tighten the tolerances for ambient temperature and humidity to improve repeatability of testing results. (California IOUs, No. 29 at pp. 12–13; AHAM, No. 33 at p. 12) The California IOUs referenced clothes dryer testing conducted by PG&E in 2019 [16] (''2019 PG&E testing''), for which three models were tested according to appendix D2 with the ambient conditions maintained at an average of 75 °F and 50 percent RH (corresponding to the nominal test conditions specified by appendix D2), with additional tests performed at an average of 72.4 °F and 57 percent RH (remaining within the specified tolerances of appendix D2). The California IOUs noted that for the three models tested, the two models with the lowest CEF results under the 75 °F and 50 percent RH test conditions switched rank order when tested at 72.4 °F and 57 percent RH. (California IOUs, No. 29 at pp. 12–13)

AHAM asserted that operating at either end of the current humidity level tolerance range can significantly impact drying performance. AHAM proposed tightening the tolerances on these requirements as follows: Room ambient air temperature to 75 ±2 °F and room RH to 50 ±5 percent. AHAM suggested that this adjustment would not increase test burden because test laboratories are already capable of maintaining the tighter tolerances. (AHAM, No. 33 at p. 12)

GEA supported all requests for tighter tolerances in the AHAM comments. GEA stated that its laboratories are currently able to maintain the tolerances suggested by AHAM without additional test burden or cost, and that GEA does not have any information indicating other laboratories would not be able to obtain these same levels of precision with little to no additional cost or burden. (GEA, No. 37 at p. 2)

DOE notes that the relevant 2019 PG&E testing was limited to three units, which is an insufficient sample of units to demonstrate a quantifiable and representative trend across all units on the market. AHAM did not provide any data in support of its comment on this issue. DOE does not have sufficient data at this time to justify making any changes to the ambient conditions specified in the test procedure. Further testing would be required on a broader, more representative selection of units in order to assess whether reducing the temperature and humidity tolerances would provide more repeatable test results. For these reasons DOE is not making any changes to the currently specified temperature and humidity tolerances at this time.

Section 2.2.1 of appendix D1 and appendix D2 specifies maintaining the room RH at 50 ±10 percent. BSH suggested that the current RH tolerance in appendix D1 and appendix D2 could be interpreted as either 10 percent of 50 (*i.e.,* a 5 percent RH range—45 percent to 55 percent) or a 10 percent RH range (*i.e.,* 40 percent to 60 percent). BSH recommended that DOE specify maintaining the room RH between the limits of 45 percent to 55 percent. (BSH, No. 30 at p. 3)

The RH specification requires maintaining RH in the range of 40 percent to 60 percent. DOE notes that when it initially established the clothes dryer test procedure in a final rule published on September 14, 1977, section 2.2 of appendix D stated, ''Maintain the . . . room relative humidity at 40 percent to 60 percent relative humidity.'' 42 FR 46145, 46150.[17] To address the potential for misinterpretation identified by BSH, DOE is amending how the RH requirement is described in the test procedures by specifying to maintain the room RH at 50 percent ±10 percent RH. This clarification is consistent with the previous test procedure and does not constitute a change to that test procedure.

5. Maintaining Burner Rating for Gas Clothes Dryers

Section 2.3.2.1 of appendix D1 and appendix D2 requires that natural gas clothes dryers maintain the hourly British thermal unit (''Btu'') rating of the burner during testing to within ±5 percent of the hourly Btu rating specified by the manufacturer.[18] Section 2.3.2.2 of appendix D1 and appendix D2 provides analogous requirements for propane clothes dryers. The requirement to maintain the hourly Btu rating of the burner provides repeatable test conditions, recognizing that the rate of heat input into a clothes dryer can significantly affect its performance. These sections provide instructions regarding tolerances and adjustments that can be made to the inlet gas pressure,[19] gas pressure regulator setpoint,[20] and/or modifications to the orifice [21] in order to maintain the hourly Btu rating within ±5 percent of the rating specified by the manufacturer.

If the required hourly Btu rating cannot be achieved under the allowable range in gas inlet pressure, the prior test procedures provided instruction for modifying the orifice of the gas burner as necessary (*i.e.,* adjustments to the gas inlet pressure should be made before considering modifications to the orifice). However, the large majority (if not all) of clothes dryers currently on the market include a gas pressure regulator, which is situated between the gas inlet and the orifice. Since the purpose of a gas pressure regulator is to provide a constant output pressure regardless of fluctuations in upstream supply pressure, adjusting the gas inlet pressure upstream of a pressure regulator will typically have no impact on the pressure of the gas exiting the regulator and entering the orifice, or likewise the hourly Btu rating.

To provide further direction applicable to the large majority of gas clothes dryers on the market that include a gas pressure regulator, in the July 2019 NOPR, DOE proposed an order of adjustment for maintaining the hourly Btu rating within specification as follows: (First) adjust the supply gas pressure, (second) adjust the pressure regulator setpoint, or (third) modify the orifice as necessary. 84 FR 35484, 35494 (July 23, 2019). The proposed order specifies using an approach with the

[16] Test results from the 2019 PG&E testing are referenced in the California IOUs comment in the docket for this rulemaking at: *www.regulations.gov/document?D=EERE-2014-BT-TP-0034-0029.*

[17] DOE revised how the relative humidity specification was presented in appendix D (*i.e.,* presenting the specification as ''50 ± 10 percent'') in a final rule published May 19, 1981, but stated that the substance of the requirement was not being amended. *See* 46 FR 27324, 27325.

[18] The hourly Btu rating of a gas clothes dryer is typically specified on the product's nameplate sticker.

[19] For natural gas clothes dryers, section 2.3.2.1 of appendix D1 and appendix D2 specifies maintaining the gas supply pressure immediately ahead of all controls within a range of 7 to 10 inches of water column. For propane clothes dryers, section 2.3.2.2 of appendix D1 and appendix D2 specifies maintaining the gas supply pressure immediately ahead of all controls within a range of 11 to 13 inches of water column.

[20] For both natural gas and propane clothes dryers, if the clothes dryer is equipped with a gas appliance pressure regulator for which the manufacturer specifies an outlet pressure, the regulator outlet pressure must be maintained within ±10 percent of the value recommended by the manufacturer in the installation manual, on the nameplate sticker, or wherever the manufacturer makes such a recommendation for the basic model.

[21] The orifice is an attachment that typically screws into the outlet of the gas pressure regulator and has a small-diameter outlet hole, through which the gas flows into the burner. For both natural gas and propane clothes dryers, the test procedures provide for modifying the orifice of the gas burner as necessary if the required hourly Btu rating cannot be achieved under the allowable range in gas inlet pressure.

least amount of test burden necessary to achieve the specified test conditions. This order also corresponds to the least amount of modification to the unit that would be necessary to achieve the specified test conditions. Adjusting the supply gas inlet pressure requires no modifications to the clothes dryer itself. Adjusting the pressure regulator setpoint typically requires removing an access panel on the clothes dryer and tightening or loosening a screw on the regulator. Modifying the orifice typically requires removing an access panel on the clothes dryer, disassembling the burner, removing the orifice, modifying the orifice (*e.g.,* by drilling a larger-diameter outlet hole), reinstalling the orifice, and finally reassembling the burner.

In DOE's testing experience, any deviation of the hourly Btu rating beyond ±5 percent of the rated value can be remedied with a minor adjustment to the gas pressure regulator (within the allowable range of ±10 percent of the recommended pressure level). Based on DOE's experience with third-party test laboratories, preferentially starting with the least burdensome adjustments before trying progressively more burdensome adjustments is generally consistent with industry practice.

In the July 2019 NOPR, DOE proposed to provide this direction in a new section 2.3.2.3 in both appendix D1 and appendix D2, which would apply to both natural gas and propane clothes dryers. In conjunction, DOE proposed simplifying the existing provisions within sections 2.3.2.1 and 2.3.2.2 to reduce duplication with provisions that would be included in the new section 2.3.2.3, and therefore improve the overall readability of the test procedures.

NEEA supported specifying the order of specification for adjustment; however, NEEA urged DOE to remove the third proposed option to physically modify the gas orifice. NEEA suggested that in its experience, such modifications are not included in installation manuals supplied with the product, and physically modifying the orifice may produce test results that would not be representative of the manufactured product as installed in the field. (NEEA, No. 38 at p. 17) NEEA further suggested that the test procedure should specify test conditions that are achievable, and that if a unit is unable to stay within those parameters, modification would need to occur on the manufacturing side rather than as the responsibility of the testing technician to physically modify the product. (NEEA, Public Meeting Transcript, No. 23 at pp. 27–30, 40–41)

AHAM supported DOE's proposal, stating that it is consistent with current best laboratory practice, would clarify and simplify the test procedure, would codify the method that has long been used to test clothes dryers, and is needed to ensure test conditions can be met throughout the test. AHAM also stated that if these three steps are not permitted, the test will become unduly burdensome to conduct. In addition, AHAM explained that providing for adjustment of the orifice represents a balance among test burden and the accuracy, repeatability, and reproducibility of the test. (AHAM, No. 33 at p. 8; AHAM, Public Meeting Transcript, No. 23 at pp. 29–32)

The purpose for adjustment of the orifice during testing is to ensure that the performance of the clothes dryer is representative of performance at the Btu rating specified by the manufacturer on the product's nameplate, which informs the field installation conditions. Allowing for adjustment of the orifice reduces test burden and improves repeatability by providing test laboratories with a last resort to maintain the hourly Btu rating as specified by the manufacturer. As stated in the July 2019 NOPR proposal, modification of the burner orifice shall be used as the last choice for maintaining the hourly Btu rating. 84 FR 35484, 35494 (July 23, 2019).

Based on all the available information, including the experience of DOE, industry, and laboratories with testing, and to ensure the test is repeatable with minimal test burden as discussed in the preceding paragraphs, DOE is amending the test procedure as proposed in the July 2019 NOPR to provide the order of the existing provisions that shall be taken to maintain the hourly Btu rating within ±5 percent of the rating specified by the manufacturer.

6. Gas Pressure Tolerance and Measurement

Section 2.3.2.1 of appendix D1 and appendix D2 requires that the natural gas supply pressure must be maintained between 7 to 10 inches of water column ahead of all controls for all gas clothes dryers using natural gas. The hourly Btu rating of the gas burner must be maintained within ±5 percent of the rating specified by the manufacturer, and the natural gas supplied must have a heating value of approximately 1,025 Btu per standard cubic foot. The actual heating value must be obtained by use of a standard continuous flow calorimeter described by section 2.4.6 of appendix D1 and appendix D2, or by the purchase of bottled natural gas whose Btu rating is certified to be at least as accurate as that obtained by use of a standard continuous flow calorimeter.

GEA suggested that the current gas input pressure tolerance of between 7 and 10 inches water column (''WC'') may create unreasonable variance in the test outcomes. GEA noted that while a range may be necessary to reach the rated Btu/hr of a unit for testing, the procedure should be amended to reduce variability where possible. Referencing the process set forth in ANSI Standard Z21.5.1–2017, ''Gas Clothes Dryers, Volume I, Type 1 Clothes Dryers,'' GEA recommended that DOE adopt 7 inches WC as the target with a maximum of 10 inches WC in its gas clothes dryer test procedures.

GEA further suggested that the range for the target Btu/hour during testing should be the nominal rating of the appliance ±2.5 percent rather than the currently specified ±5 percent, noting that the current range allows for a 10-percent variation in Btu/hr, which is a key measure used to determine energy usage by gas clothes dryers. GEA stated that the current range allows too much variability in testing results. According to GEA, the proposed tighter range would not increase test burden. (GEA, No. 37 at p. 3)

DOE is unaware of any data that suggests either the current gas input pressure tolerance or the current tolerance of ±5 percent of hourly Btu rate produces unrepresentative or unrepeatable test results. GEA did not provide any such data. In addition, as discussed previously, the large majority of (if not all) clothes dryers currently on the market include a gas pressure regulator, which is situated between the gas inlet and the orifice. Adjusting the gas inlet pressure upstream of a pressure regulator will typically have no impact on the pressure of the gas exiting the regulator, or likewise the hourly Btu rating. Absent data or other information demonstrating an issue with the current natural gas supply conditions, DOE is not amending these provisions.

GEA further commented that gas flow meters vary by manufacturer and type and described the wide variation in different types of meters. GEA suggested that given the wide range of issues and error that can be introduced by the wide variability in gas flow meters, DOE should specify type and capacity standards for the type of gas flow meter to be used for the gas clothes dryer test procedures. (GEA, No. 37 at pp. 3–4) GEA further noted that the gas heating value (''GEF'') specified in the procedures for gas clothes dryers must be corrected according to the U.S. Bureau of Standards, circular C417,

1938 (as specified in section 3.4.6.3 of appendix D1 and appendix D2), which requires a series of correction and conversion factors. GEA commented that the calculations and corrections vary according to calorimeter equipment instructions, type of gage flow meter used, and may be influenced by gas supply pressure, barometric pressure, gas temperature, and gas absolute pressure (''psia''). GEA suggested that all formulas and measurements used in making GEF calculations should be clearly specified in the DOE gas clothes dryer procedures, and that this missing information increases test uncertainty and creates reproducibility and reliability issues for the DOE verification program. (GEA, No. 37 at p. 4)

Additionally, GEA commented that the Heat Input Test (required in sections 2.3.2.1 and 2.3.2.1 of appendix D1 and appendix D2) is an essential part of determining the hourly Btu rating in the appendix D1 and appendix D2 test procedures for gas clothes dryers, but there is currently no specified procedure on how the Heat Input Test is to be performed. GEA requested that DOE develop a procedure for the heating input test to determine the Btu/hr of the clothes dryer under test, and that the procedure should include requirements for load size, load wetness, clothes dryer cycle selection, clothes dryer run time, and gas flow verification during the measurement period. GEA asserted that this would resolve various issues, including the need to account for the time for gas flow to begin after cycle start, the change in input rate over time for the first several minutes of burner operation, and the potential for burner cycling during the Heat Input Test. GEA recommended that DOE review the procedure in ANSI Z21.1–2016/CSA 1.1–2016, ''Household Cooking Gas Appliances'' (''ANSI Z21.1–2016/CSA 1.1–2016''), which specifies that measurements not be taken until 5 minutes after burner ignition to account for variation in flow rate caused by heat effects on the equipment. GEA also recommended that the Heat Input Test be performed with a DOE test cloth load wetted in the same fashion as done for the primary energy consumption test, to ensure that the burner in the clothes dryer is running for the complete measurement time during the Heat Input Test. (GEA, No. 37 at pp. 4–5)

DOE understands that test laboratories do not all use the same gas flow meters; however, DOE is unaware of data or other information suggesting any substantive variation in test results due to the use of different gas flow meters. DOE also reviewed ANSI Z21.1–2016/CSA 1.1–2016 and determined that for the purposes of measuring the hourly Btu rating for gas clothes dryers, the products that are the subject of that test standard differed too widely in use and purpose from clothes dryers to warrant direct application of testing provisions to appendix D1 and appendix D2. Although DOE does not currently specify a particular procedure for measuring the Btu firing rate of the burner, DOE is unaware at this time of any data that would suggest a significant variation in test results associated with different methods of measuring the hourly Btu rating for gas clothes dryers. GEA did not provide any such data. For these reasons, DOE is not specifying type and capacity standards for the gas flow meter in appendix D1 and appendix D2, and is not specifying a procedure to use for determining the Btu firing rate of the gas clothes dryer burner at this time.

Were DOE to become aware of data on any of the topics covered in this section, DOE would consider such data in a future evaluation of the clothes dryer test procedure as appropriate.

7. Water Conductivity

The DOE test procedure does not specify a requirement for water conductivity, which is a measurement of the water's ability to conduct electric current and is expressed in microsiemens per centimeter (''μS/cm''). The California IOUs suggested that while the reproducibility of the appendix D2 test procedure is reasonable, variations due to water conductivity need to be addressed to ensure reproducible test results. The California IOUs presented test data from the 2019 PG&E Testing showing measured CEF as a function of water conductivity for six clothes dryer models. Each model was tested multiple times, and the data indicates the measured CEF value and measured water conductivity for each test. Two of the models demonstrated a positive correlation (*i.e.,* CEF increased as water conductivity increased), whereas four of the models showed either negative correlation or no significant correlation between water conductivity and CEF. The California IOUs also presented an analysis of the repeatability of the measured CEF values from one of the models in the PG&E test sample and concluded that reproducibility improves when water conductivity is controlled. (California IOUs, No. 29 at pp. 7–9)

The California IOUs stated that water hardness and water conductivity can be controlled independent of one another and have naturally occurring variances around the United States. The California IOUs suggested that water conductivity can play an important role in how effective a clothes dryer's automatic cycle termination feature operates, particularly for a common automatic cycle termination method that uses moisture sensing bars to calculate the moisture content of the load. *Id.*

The California IOUs urged DOE to explore this variable further. The California IOUs suggested the DOE test procedure require testing at multiple water conductivity levels or incorporate the impact of this variable through other means in order to encourage manufacturers to address potential CEF variability due to water conductivity and thereby improve CEF reproducibility and repeatability. (California IOUs, No. 29 at pp. 5–12)

To address these comments, DOE conducted investigative testing exploring the effects of water conductivity on the measured CEF value. DOE tested a sample of six consumer clothes dryers representing a range of product classes and efficiency levels, varying the water conductivity between 0 μS/cm (*i.e.,* distilled water) and 800 μS/cm (*i.e.,* the maximum safe level in accordance with the water quality standards cited by the California IOUs in their comment). The water used to saturate the test cloth was prepared using distilled water with added table salt (sodium chloride), sufficient to achieve the desired conductivity, confirmed using a conductivity meter. Each of the six test units was tested three times according to appendix D2, saturating the test cloth in successive tests with water having a conductivity level of 0 μS/cm (distilled), 400 μS/cm, and 800 μS/cm. Figure III.1 presents the CEF values from the three tests for each of the six units tested at varying levels of water conductivity, additionally including results from previous testing using tap water. DOE estimated the conductivity of its tap water as 130 μS/cm, based on an average of multiple measurements on different test days.

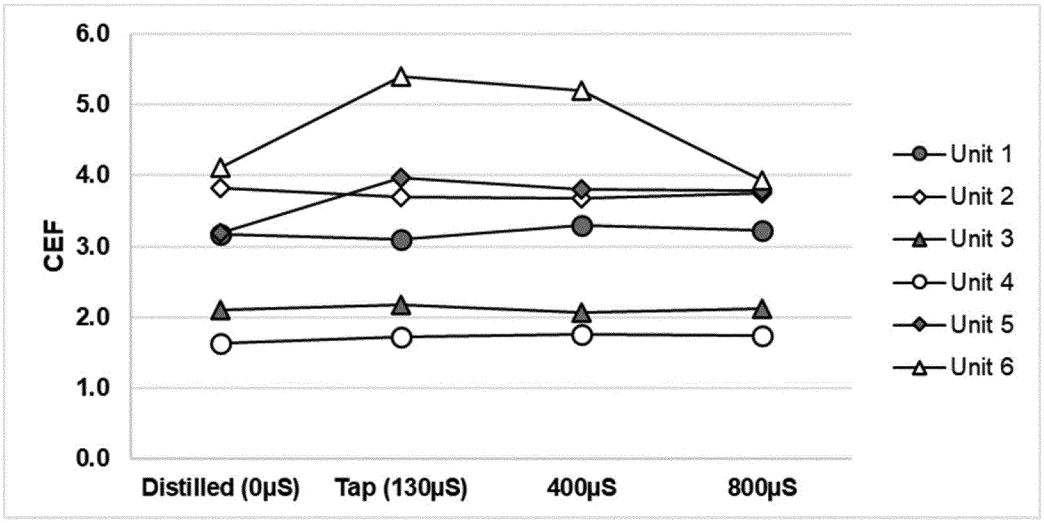


**Figure III.1 CEF at Different Water Conductivity Levels**

The results shown in Figure III.1 indicate no discernable correlation between CEF and water conductivity, with minimal change in CEF overserved for Units 1 through 4. Unit 6 exhibited a substantially higher CEF at 130 µS/cm and 400 µS/cm, while Unit 5 demonstrated a lower CEF for only the distilled water test; in neither case, however, did the trend in CEF correlate consistently with water conductivity. DOE's data suggest that CEF is not directly related to water conductivity, as there is no predictable or consistent correlation between CEF and water conductivity.

Similarly, the test results submitted by PG&E also showed inconsistent correlations between CEF and water conductivity (*i.e.,* in some cases a positive correlation, in some cases a negative correlation, and in other cases no clear correlation), and limited evidence from a single clothes dryer model suggesting that controlling for water conductivity may lead to more repeatable or reproducible results. (California IOUs, No. 34 at pp. 9–12) DOE appreciates the information regarding water conductivity and its potential effect on repeatability and reproducibility of the test procedure. However, the data provided by commenters and additional data obtained through DOE's investigative testing do not definitively suggest any clear and predictable correlation between water conductivity and measured efficiency, and thus, do not indicate that including a specification in the test procedure for water conductivity would improve the repeatability or reproducibility of the test results. For these reasons, DOE is not adopting a water conductivity requirement in this final rule.

*D. Test Conduct*

1. Test Conditions and Consumer Usage Patterns

DOE received various comments in response to the July 2019 NOPR regarding testing conditions in the DOE clothes dryer test procedure. The following sections discuss these issues and changes to the DOE clothes dryer test procedure.

a. Test Load Size

Section 2.7 of appendix D1 and appendix D2 specifies a test load weight of 8.45 pounds ± .085 pounds for standard-size clothes dryers (*i.e.,* with a drum capacity of 4.4 cubic feet or greater) and a test load weight of 3 pounds ± .03 pounds for compact-size clothes dryers (*i.e.,* with a drum capacity of less than 4.4 cubic feet).

NEEA, the California IOUs, Joint Commenters, CEC, NRDC, and Samsung urged DOE to include additional load size testing, with priority given to small load sizes. These commenters generally stated that small loads represent a large percentage of clothes dryer cycles in the field and result in lower measured efficiency compared to the required load sizes. These commenters asserted that adding a smaller load size to the test procedure would make the test more representative, and the efficiency ratings more useful, for consumer purchasing decisions. The details of each comment are presented as follows, including discussion of data sources and each commenter's assertions. (NEEA, Public Meeting Transcript, No. 23 at pp. 90, 101–104, 105–107, 112–113; California IOUs, Public Meeting Transcript, No. 23 at pp. 104–105, 139–144; CEC, Public Meeting Transcript, No. 23 at pp. 150; Joint Commenters No. 34 at pp. 1–2; NRDC, No. 35 at p. 2; Samsung, No. 36 at p. 3)

i. 2014 NEEA Field Study

NEEA and the California IOUs cited the 2014 NEEA field study as justifying the use of an additional half-size test load. NEEA commented that the 2014 NEEA field study and recent national market research conducted by the California IOUs suggest that typical load sizes vary widely, but that small loads represent 20 to 40 percent of all loads. The California IOUs cited from the 2014 NEEA field study that the 8.45-pound test load specified in appendix D1 and appendix D2 for standard-sized clothes dryers is close to the average weight of ''simple loads'' [22] (7.87 pounds), but the most common load weights were smaller, with 40.5 percent of loads being less than 6.5 pounds. The California IOUs also referenced the 2014 NEEA field study in commenting that clothes drying performance at the average load size is not predictive of performance at small load sizes. The California IOUs and NEEA suggested that a test load half the size of the DOE-specified load could capture the reduced clothes dryer performance with small-size loads and would produce a more representative efficiency ranking order for clothes dryers. NEEA suggested that small loads

[22] Simple loads are defined in the 2014 NEEA field study as clothes dryer loads with the following characteristics: The load is both washed and dried; the IMC is between 33 percent and 100 percent, the bone-dry weight is between 3 pounds and 15 pounds; no items are removed between the wash and dry cycles; the dryer is not run multiple times.

result in less energy efficient performance due to higher relative startup energy, lower cloth surface area, reduced contact of the cloth with the moisture sensing strips, and reduced effectiveness of using the measured exhaust temperature to assess the remaining moisture content. NEEA also suggested that consumers may separate garments from the washer into multiple drying loads, resulting in more clothes dryer loads per year than washer loads, with each clothes dryer load being smaller, on average. (California IOUs, Public Meeting Transcript, No. 23 at pp. 104–105, 139–144; NEEA, Public Meeting Transcript, No. 23 at pp. 90, 101–104, 105–107, 112–113)

AHAM commented that although NEEA's data showed small clothes dryer load sizes in the Pacific Northwest, the data are not representative of national clothes dryer usage, and that clothes dryer use may differ from region to region. (AHAM, Public Meeting Transcript, No. 23 at pp. 103–104)

ii. 2019 PG&E Market Survey

The California IOUs asserted that, based on the survey of clothes dryer usage in 210 single family households conducted by PG&E in September 2019 (''2019 PG&E market survey''),[23] clothes dryer usage (including load sizes and cycle settings) does not significantly vary between seasons, with only cycle settings exhibiting some variation between the Pacific Northwest and the rest of the United States. The California IOUs commented that results for the typical clothes dryer load size showed no significant differences when comparing winter and summer load operation, while the regional differences between the Pacific Northwest and the rest of the United States were minimal. The California IOUs suggested that the results provide further context and validity to the usage patterns presented in the 2014 NEEA field study. (California IOUs, No. 29 at pp. 1–4, 13–15)

iii. Other Testing

NEEA commented that its organization tested 12 electric clothes dryer models manufactured after 2015 with both the DOE standard load and a smaller load comprised of what NEEA stated was ''real clothing.'' NEEA presented test data and concluded that the measured efficiency rank order among the tested models changed appreciably from the standard load size test, with the ENERGY STAR-qualified units particularly demonstrating lower efficiency with the smaller load size relative to the non-ENERGY STAR-qualified units in its sample for both electric and gas units. (NEEA, No. 38 at pp. 1–3, 9–11, 18)

The California IOUs commented that in the 2019 PG&E testing, PG&E investigated the impact of smaller load sizes on three standard-size clothes dryer models from different brands. The California IOUs cited the results of the 2019 PG&E testing in which the efficiency rank order of the three models changed when tested with smaller loads. Based on these results, the California IOUs commented that that the appendix D2 test procedure may not accurately represent drying of smaller loads. The California IOUs recommended including a smaller load size as part of the clothes dryer test procedure in order to capture the rank order and CEF variability under commonly used clothes dryer operating conditions. (California IOUs, No. 29 at pp. 1–4, 13–15)

NRDC recommended that DOE consider any updates to the IEC clothes dryer test procedure regarding smaller test load sizes, but that DOE should not wait for IEC before DOE proposes changes to the DOE test procedure. (NRDC, No. 35 at p. 2)

iv. DOE Response

DOE appreciates the data provided by the commenters regarding various study and survey results relating to the energy efficiency performance of clothes dryers when drying smaller load sizes. DOE notes that the cited studies and surveys are not conclusively representative of the entire country, given that they were limited in scope and geographic location. The 2019 PG&E market survey data did not effectively demonstrate that there were no significant differences between the Pacific Northwest and the rest of the United States in clothes dryer load size. For example, these data showed fewer ''Mostly Full'' loads in the Pacific Northwest (50 percent in the winter and 50 percent in the summer) than in the rest of the country (64 percent in the winter and 61 percent in the summer). The 2019 PG&E market survey data also showed more ''Less Than Half Full'' loads in the Pacific Northwest (25 percent in the winter and 33 percent in the summer) than in the rest of the country (18 percent in the winter and 22 percent in the summer). These differences also suggest that the results of the 2014 NEEA field study may be too limited in geographic scope to be considered representative of the entire United States.

However, the national data collected by the 2019 PG&E market survey may better represent the United States as a whole, albeit with a relatively small sample size of 210 respondents. As presented by the California IOUs, the national sample from the 2019 PG&E market survey indicates that the relative proportion of very small loads (''Less Than Half Full'') is similar in magnitude to the relative proportion of ''Very Full'' loads. The data indicate that in the summer months, 22 percent of loads are less than half full, while 15 percent of loads are very full; and in the winter months, 18 percent of loads are less than half full and 16 percent of loads are very full. Given the relatively small sample size of this national consumer usage data, DOE is unable to determine at this time the representativeness of these load size distributions based on the provided information.

To supplement and better understand the results provided in comments, DOE tested seven standard-size electric clothes dryers from four manufacturers, representing a range of capacities, venting configurations, efficiency performance, and heating technologies, to investigate the impact of test load size on energy use and measured efficiency. Table III.2 provides the characteristics of each model in DOE's test sample.

TABLE III.2—CHARACTERISTICS OF CLOTHES DRYERS IN DOE TEST SAMPLE

| Test unit | Capacity (cubic feet) | Venting configuration | Measured CEF using appendix D2 | Heating technology |
|---|---|---|---|---|
| 1 | 7.2 | Vented | 2.79 | Electric Resistance. |
| 2 | 7.0 | Vented | 3.15 | Electric Resistance. |
| 3 | 7.4 | Vented | 3.29 | Electric Resistance. |
| 4 | 7.4 | Vented | 3.36 | Electric Resistance. |

[23] The survey respondents were asked to identify their typical dryer load size and settings in the summer (June through August) and winter (December through February) seasons.

TABLE III.2—CHARACTERISTICS OF CLOTHES DRYERS IN DOE TEST SAMPLE—Continued

| Test unit | Capacity (cubic feet) | Venting configuration | Measured CEF using appendix D2 | Heating technology |
|---|---|---|---|---|
| 5 | 7.4 | Vented | 3.92 | Electric Resistance. |
| 6 | 7.4 | Ventless | 4.45 | Heat Pump. |
| 7 | 5.1 | Ventless | 7.77 | Heat Pump. |

For each model, DOE tested five load sizes using DOE test cloth: 3.0, 5.7, 8.45, 11.2, and 13.9 pounds. DOE conducted each test according to appendix D2, substituting the load size as noted. Figure III.2 shows the combined total energy consumed in each test cycle (corresponding to $E_{CC}$ as calculated in section 4.6 of appendix D2) and indicates an approximately linear relationship between the weight of the test load and the per-cycle energy consumption.

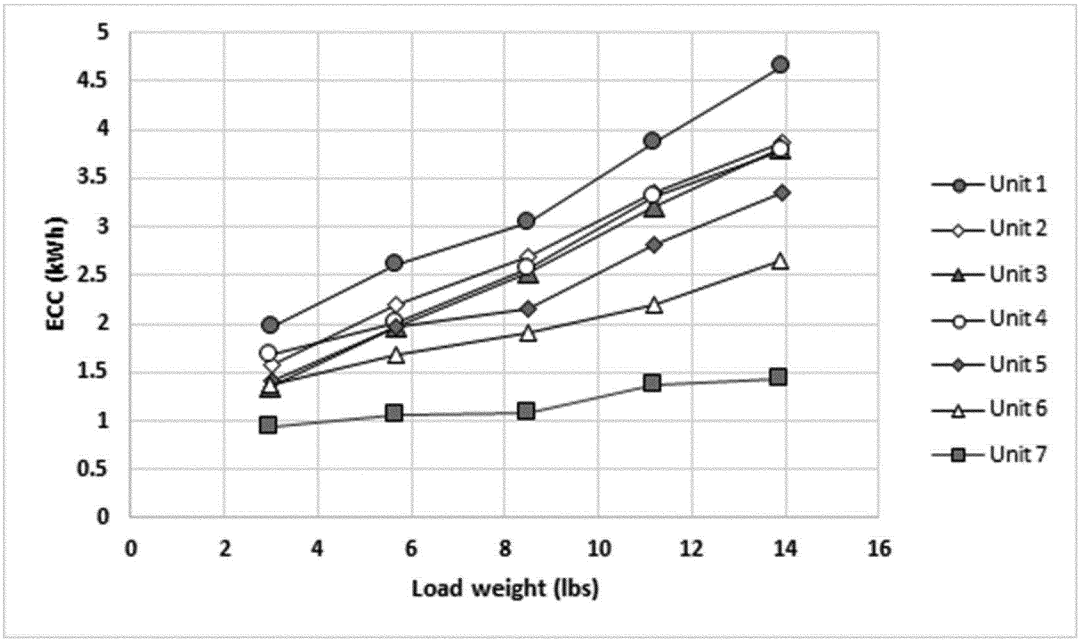


**Figure III.2 Standard-Size Electric Clothes Dryer Per-Cycle Energy Consumption versus Load Size in DOE Testing**

The linearity of the energy consumption relationships in Figure III.2 shows that if both a smaller load size and larger load size (in relation to the current load size) are additionally tested in order to calculate the energy consumption that is representative of an average use cycle, the lower per-cycle energy consumption associated with the smaller load size would essentially be entirely offset by the higher per-cycle energy consumption associated with the larger load size, with little net change to the resulting average per-cycle energy consumption; and thus little change to the CEF value, as compared to the CEF value obtained from testing with the current single DOE test load size. With little expected change to the CEF value when considering the energy consumption associated with a range of load sizes, DOE does not believe the additional testing would provide consumers with improved information that would change their purchasing decisions compared to the current test procedure. As such, any incremental benefit of testing with additional load sizes would be outweighed by the significant added burden that would be imposed by conducting such tests. For these reasons, DOE is not making any amendments to the test procedure requiring additional test load sizes at this time.

b. Test Load Bone-Dry Weight

Section 2.7.1 of appendix D1 and appendix D2 specifies the process by which a test load is prepared for a compact-size clothes dryer. Specifically, it describes the target weight of 3.00 pounds ± .03 pounds, as well as the use of energy stuffer cloths, of which up to five may be used, to achieve the tolerance required for the bone-dry test load. Section 1.5 of appendix D1 and 1.6 of appendix D2 describe the bone-drying process.

BSH commented that for compact-size clothes dryers, for which the range of acceptable bone-dry test load weight is 3.00 pounds ±.03 pounds, it is difficult to adjust the weight of the test load because, based on its experience, the average weight of an individual energy stuffer cloth is .037 pounds. According to BSH, this may lead to variability in test results. BSH recommended that the maximum allowable weight of the test load after the first bone-dry run should be 3.03 pounds for compact-size clothes dryer loads, and that the test load weight after every bone-dry run shall be recorded. BSH also commented that the bone-dry definition has no maximum time limit for the bone-drying process.

Without an upper time limit, BSH argued it would be possible for the bone-drying process to be used to reduce the weight of heavy test loads to meet the maximum weight limits and not solely for setting the baseline for the 2-percent FMC condition. BSH recommended that DOE require that any single bone-dry run shall not exceed 10 minutes and 15 seconds, and that no more than four bone-dry runs may be conducted for a single test load, to ensure that the bone drying process is used only to set the baseline for the 2-percent FMC. (BSH, No. 30 at pp. 2–3)

DOE is unaware of issues regarding achieving the bone-dry test weight as specified in section 1.5 of appendix D1 and section 1.6 of appendix D2, which both define ''bone dry'' as a condition of a load of test cloths which has been dried in a clothes dryer at maximum temperature for a minimum of 10 minutes, removed, and weighed before cool down, and then dried again for 10-minute periods until the final weight change of the load is 1 percent or less. Further, BHS did not explain how the bone-dry provisions could be used for a purpose other than establishing the bone-dry baseline. The bone-drying process is required to establish the baseline weight for the FMC condition, and setting an upper time limit to the bone-drying process as suggested by BHS could significantly increase test burden or require manufacturers to design clothes dryers with specialized drying cycles solely for achieving bone-drying specifications outside of the scope of consumer-driven needs.

Based on the preceding discussion, DOE is not amending the test procedure regarding acceptable bone-dry test load weight or the bone-drying process.

c. Test Load Composition

Section 2.6 of appendix D1 and appendix D2 specifies a test load composed of a pure finished bleached cloth, made with a momie or granite weave, which is a blended fabric of 50-percent cotton and 50-percent polyester. Appendix D1, section 2.6.1(a); appendix D2, section 2.6.1(a). The ''energy test cloth'' is made from material that is 24 inches by 36 inches, hemmed to 22 inches by 34 inches, and weighs within 10 percent of 5.75 ounces per square yard. Appendix D1, section 2.6.1(b); appendix D2, section 2.6.1(b). Smaller ''energy stuffer cloths'' are made of material that is 12 inches by 12 inches, hemmed to 10 inches by 10 inches.[24] Appendix D1, section 2.6.2; appendix D2, section 2.6.2.

Several industry test procedures specify clothing loads for measuring the drying performance of clothes dryers. ANSI/AHAM's test procedure, HLD–1–2010, ''Household Tumble Type Clothes Dryers'' (''ANSI/AHAM HLD–1–2010'') specifies the use of 100-percent cotton bed sheets, towels, and pillowcases. The bedsheets and pillowcases are plain weave linen, while the towels are huckaback weave. ANSI/AHAM HLD–1–2010, Annex A. IEC Standard 61121, Edition 4.0 2012–02, ''Tumble dryers for household use—Methods for measuring the performance'' (''IEC Standard 61121'') incorporates by reference from IEC's consumer clothes washer test procedure two different test loads: (1) the ''Cotton test load,'' which comprises 100-percent cotton bed sheets, towels, and pillowcases consistent with ANSI/AHAM HLD–1–2010; and (2) the ''Synthetics/blends test load,'' which comprises pillowcases and buttoned men's shirts fabricated from plain weave 35-percent cotton and 65-percent polyester fabric. IEC Standard 61121, sections 6.5.6.1–6.5.6.2.

Another procedure that uses a variety of test cloth materials is the ''Utility Test Protocol'' [25] (''UTP'') developed by NEEA and the California IOUs, which utilities and efficiency advocates have encouraged DOE to consider as a model for implementing revised test loads. (California IOUs, No. 29 at pp. 1–3) The UTP is an investigative test method that was developed based on data collected in 2012 as part of the 2014 NEEA field study. It consists of one test using the appendix D2 test procedure and four supplemental tests that use a range of test load compositions, test load sizes, and cycle settings.[26] The UTP generates a combined energy metric referred to as the Utility Combined Energy Factor (''UCEF''), comprised of a weighted average of each model's energy efficiency performance on each of the five tests, using weighting factors determined by a best fit between lab and field test data.

NEEA, the Joint Commenters, and CEC urged DOE to consider adopting test loads with material more similar to real clothing, stating that cloth material has a significant impact on clothes dryer efficiency. NEEA and the Joint Commenters recommended that DOE consider adopting an optional test procedure that uses a test load with varied size, thickness, and fabric types, such as the IEC or AHAM test loads, which commenters suggested would be more representative. The Joint Commenters suggested that DOE monitor the IEC test procedure development. CEC referenced a Pacific Northwest National Laboratory (''PNNL'') study [27] that showed differences in load dryness and drying rate between the DOE test load and the AHAM test load. CEC stated that the AHAM test load, consisting of bed sheets, pillowcases, and hand towels, is less uniform and more challenging to dry, and that PNNL found that the AHAM test load had a higher moisture content than the DOE test load as the clothes dryer entered automatic cycle termination. NEEA emphasized the impact of test cloth material on heat-pump clothes dryer performance particularly and also stated that appendix D2 results for both high efficiency and low efficiency models aligned well with the results for test loads with using fabrics of differing weights and materials, but failed to distinguish between moderately efficient models. (NEEA, Public Meeting Transcript, No. 23 at pp. 18, 20, 22–23, 106–109, 117–118; Joint Commenters, No. 34 at p. 2; CEC, No. 31 at p. 2)

Energy Solutions commented that the thickness of the test cloth has a large impact on clothes dryer performance, regardless of type of material used. Energy Solutions suggested that DOE take cloth thickness into consideration when balancing representativeness and repeatability in the test procedure. (Energy Solutions, Public Meeting Transcript, No. 23 at pp. 21–22)

GEA commented that there is inherent variation in natural fibers of a single uniform cloth, even within specially manufactured DOE test cloth lots, that creates variability that impacts the reliability of the DOE test procedure. AHAM claimed that the summary of test data from the 2019 PG&E testing, prepared by Energy Solutions,[28] shows that changing the test load composition

[24] The test procedure specifies that the energy stuffer cloths are to be used to adjust the test load to achieve the proper weight, but that no more than five stuffer cloths may be added per test load.

[25] Available at *https://neea.org/resources/energy-efficiency-test-procedure-for-residential-clothes-dryers-1.*

[26] The ''Utility Test Protocol'' consists of a series of five tests: (1) Using the appendix D2 test method; (2) using a 4.22-pound ''real-world'' load with the medium temperature setting and ''eco'' mode deactivated; (3) using a 16.9-pound ''real-world'' load with the medium temperature setting and ''eco'' mode deactivated; (4) using an 8.45-pound ''real-world'' load using the most efficient setting configuration possible; and (5) using an 8.45-pound ''real-world'' load using settings that achieves the fastest rate of drying possible.

[27] TeGrotenhuis, W, PNNL, Clothes Dryer Automatic Termination Sensor Evaluation, September 2014.

[28] PG&E Residential Dryer Testing, Residential Clothes Dryer Test Protocol Investigation, Prepared by David Jagger, Energy Solutions (Sept. 6, 2019), Docket No. EERE–2014–BT–TP–0034; RIN 1904–AD46; ID EERE–2014–BT–TP–0034–0024 (Posted Sept. 30, 2019).

as indicated by the PG&E testing will introduce significant additional variation, beyond that of the current DOE test cloth. AHAM stated that test procedures with significant variation do not provide uniform or reliable results for the purpose of allowing consumers to make informed purchase decisions based on energy use/efficiency because the results of a highly variable test procedure are not comparable within or across brands. AHAM and GEA asserted that the 2014 NEEA field study provides an insufficient basis on which to amend the test procedure, and the concept of a ''real-world'' test load that would significantly increase test variation is incompatible with the requirement that test procedures be ''reasonably designed,'' in accordance with EPCA (42 U.S.C. 6293(b)(3)). AHAM also stated that data collected on test load composition and consumer use would need to be national to be representative or to inform rulemaking decisions, because clothing washed and dried varies by climate and season. Without such data, AHAM maintains that it is impossible and inappropriate to determine or change the average use/cycle in a test procedure. AHAM noted that the DOE clothes dryer test procedure, including the test load composition, is based on consumer use studies and changing the test would require showing that something has changed with regard to consumer behavior or that more accurate consumer use study data are available. AHAM asserted that the 2014 NEEA field study is not a sufficient basis upon which to make changes to the clothes dryer test procedure, namely the test load composition, given that it was conducted only in the Pacific Northwest and only during the winter season, and therefore not representative of the laundry composition of the entire nation throughout the year. (AHAM, Public Meeting Transcript, No. 23 at pp. 98–99 AHAM, No. 33 at pp. 3–4; GEA, No. 37 at p. 2)

Altering the test cloth composition would require further investigation into a suitable representative replacement. The data provided by the 2014 NEEA field study (discussed in section III.D.1.a.i of this document) are insufficiently representative to justify the significant cost of developing and transitioning to a new type of test cloth, due to the limited sample size, region, and time of year during which the studies were conducted, as discussed previously in AHAM's comment.

As explained previously, DOE is unaware of any new information that would alter its previous determination, that testing using the IEC and AHAM test loads is less representative than testing with the DOE test load, to warrant any modifications to the DOE test procedure at this time. 78 FR 49608, 49620 (Aug. 14, 2013). DOE therefore is not making any changes to the test cloth material requirements in appendix D1 and appendix D2 at this time.

However, in light of the feedback received regarding test load composition, DOE will continue to evaluate the representativeness of test results obtained through the use of the current test load composition requirements in the DOE test procedure. DOE will also continue to monitor development of industry standards and other efforts related to test load composition.

d. Test Cycle Selections

Section 3.3.2 of appendix D2 specifies that for automatic termination control clothes dryers, the ''normal'' program shall be selected for the test cycle. For clothes dryers that do not have a ''normal'' program, the cycle recommended by the manufacturer for drying cotton or linen shall be selected. If the drying temperature setting can be chosen independently of the program, it shall be set to the maximum. If the dryness level setting can be chosen independently of the program, it shall be set to the ''normal'' or ''medium'' dryness level setting. After the completion of the test cycle, the test load is removed and weighed. If the FMC is greater than 2 percent, the test is considered invalid and a new run shall be conducted using the highest dryness level setting.

Industry standards address cycle selection differently from the DOE test procedure. Section 4.5.1 of ANSI/AHAM HLD–1–2010 specifies that the test cycle be run using the maximum temperature setting without allowing the clothes dryer to advance into the cool down period. If the required FMC specified in the industry standard (6 percent) cannot be met using this setting, a new test run must be conducted using a different user-selected setting that will achieve the target FMC, as described in section 4.5.6 of ANSI/AHAM HLD–1–2010. IEC Standard 61121 requires that the test cycle for a given load composition be run using the cycle program and settings specified in the manufacturer's instructions to achieve a target FMC, which is based on the test load composition; in the absence of any instructions from the manufacturer, or if the specified cycle program and settings do not achieve the required FMC, the test shall be run using a user-selected combination of cycle program and settings that will achieve the required FMC, as specified in section 8.2.2 of IEC Standard 61121 .

In response to the July 2019 NOPR, NEEA, the Joint Commenters, and the California IOUs urged DOE to consider including additional test cycle selections in the test procedure. NEEA and the California IOUs suggested that DOE should capture the impact of ''eco'' mode settings, since they asserted that the ''eco'' mode settings are often only enabled by default on the ''normal'' cycle. The California IOUs cited the 2019 PG&E testing and reported that 15 clothes dryers among the 2019 PG&E testing sample of 22 had an ''eco'' mode that was active by default on the ''normal'' setting, but not active by default on other cycle programs. For some units, the ''eco'' setting was not a selectable option during a ''high'' or ''low'' temperature cycle. The California IOUs further commented that PG&E testing at an independent lab in accordance with appendix D2 with and without the ''eco'' mode yielded results that showed changes in CEF rank order, performance, and cycle time compared to the average when the ''eco'' setting is on or off. NEEA and the California IOUs recommended that DOE add additional cycle selections to the test procedure to mitigate the impact of ''eco'' mode settings, and NEEA stated that this should be accomplished by adding a ''fast test cycle'' (*i.e.,* a cycle with a shorter duration) at the standard load size. Based on the 2014 NEEA field study and another NEEA field study conducted in 2017 that looked exclusively at load sizes and settings for the most efficient clothes dryers, NEEA asserted that 20 percent to 60 percent of all loads monitored were dried using the shortest cycle time available on the machine. NEEA and the Joint Commenters commented that heat pump clothes dryers particularly suffer efficiency losses on shorter cycle time settings, since much of their efficiency gain is obtained by drying the clothes at a lower temperature for a longer period of time, resulting in changes in efficiency rank order when a shorter cycle that uses more electric resistance heat is tested. The Joint Commenters also noted that some clothes dryers default to the most recent cycle used, which could lead to consumers not using the normal cycle for extended periods of time, meaning that testing additional cycle selections could increase representativeness. (NEEA, No. 38 at pp. 3, 12–;16, 18; Joint Commenters, No. 34 at p. 2; California IOUs, No. 29 at pp. 15–16)

AHAM commented that it is unclear whether the data presented in the 2014

NEEA field study are an accurate reflection of consumer cycle settings, as the study relied on the consumers to log their data, which may not be accurate. AHAM further asserted that without knowledge of the controls of the monitored clothes dryers, it is difficult to draw conclusions regarding the frequency of cycle selections, and those cycle selections could be impacted by the type of clothing, which was potentially heavier during the winter months. AHAM asserted that the data from the 2014 NEEA field study may not be representative of consumer use across the entire United States over the course of a year and, on their own, are not a sufficient basis upon which to justify significant changes to the test procedure. (AHAM, No. 33 at p. 3)

While the comments recommending the inclusion of additional test cycle selections suggest that changing the cycle setting could change efficiency rank order, DOE did not receive sufficient data and information to confirm that the current test selections are unrepresentative of consumer use and that other or additional test selections are warranted. DOE notes that the data presented from the 2014 NEEA field study may not be representative of annual national clothes dryer usage, and the 2019 PG&E market survey showed differences between the Pacific Northwest and the rest of the country in test cycle selections, as discussed in section III.D.a.iv of this final rule. Therefore, DOE maintains its prior determination that the ''normal'' cycle test in appendix D2 and the required temperature and dryness settings are appropriately representative. See 78 FR 49608, 49612–49613 (Aug. 14, 2013). For these reasons, DOE maintains the current approach of requiring a single cycle test, in section 3.3 of appendix D1 and appendix D2.

e. Moisture Content

i. Initial Moisture Content

Sections 2.7.1 and 2.7.2 of appendix D1 specify to extract water from the energy cloths for a test load for a compact-size dryer load and standard-size dryer load, respectively, so that the IMC is between 54.0 and 61.0 percent of the bone-dry weight of the test load. Sections 2.7.1 and 2.7.2 of appendix D2 specify that the IMC of energy cloths for a compact-size dryer load and standard-size dryer load, respectively, after extraction must be between 52.5 and 57.5 percent of the bone-dry weight of the test load. Appendix D2 also provides additional instruction that any final mass adjustments to achieve the specified IMC for the energy test cycle (57.5 percent±0.33 percent) are made by uniformly adding water to each test cloth using a spray bottle. Appendix D2, sections 2.7.1 and 2.7.2.

AHAM recommended that the appendix D1 test load IMC (*i.e.,* 54.0 to 61.0 percent) should be aligned with that of appendix D2 (*i.e.,* 57.5 percent ± 0.33 percent). AHAM also recommended specifying in appendix D1 the same method for test cloth IMC adjustment that is described in appendix D2 (*i.e.,* add water uniformly distributed among all of the test clothes in a very fine spray using a spray bottle). AHAM commented that aligning the method in appendix D1 with that in appendix D2 would make it easier for test technicians who conduct both tests. AHAM also suggested that water temperature has a significant effect on drying performance, which can cause test variation. AHAM suggested that the test procedure specify that the temperature of the spray bottle water must be 60 °F±5 °F, with a nominal target of 60 °F. (AHAM, No. 33 at pp. 12–13)

Appendix D1 requires, in addition to an IMC of 54.0 to 61.0 percent (*i.e.,* 57.5 percent ±3.5 percent), an FMC between 2.5 and 5.0 percent for all clothes dryers. Appendix D1, sections 2.7.1, 2.7.2, and 3.3. The measured test cycle energy consumption is then normalized to calculate the energy consumption required to dry the test load from exactly 57.5-percent IMC to 2-percent FMC, which is representative of clothes dryers currently on the market and of the maximum consumer-accepted FMC. Appendix D1, section 4.1. In the August 2013 Final Rule, DOE reduced the tolerance on the IMC to 0.33 percent to produce repeatable results specifically for clothes dryers with automatic termination controls, for which no such normalization is required, because the test cycle is run to completion. 78 FR 49608, 49618 (Aug. 14, 2013). Because appendix D1 does not specify running any test cycles to completion and instead applies normalization of the test cycle energy consumption for both timer and automatic termination control clothes dryers, the IMC requirements for appendix D1 do not require the more stringent tolerance of those in appendix D2, avoiding increased test burden associated with test load conditioning. As such, DOE is not amending the required IMC in appendix D1.

However, DOE agrees with AHAM that appendix D1 would benefit from the additional direction for adding water to the test load using a spray bottle as provided in appendix D2. The previous version of appendix D1 does not instruct what to do if the test load IMC is too low upon removing the test load from the extractor. A test laboratory may interpret, in this case, that the test load must be re-wet and re-spun until an acceptable IMC is achieved, which would add testing burden. Appendix D2 provides means to increase the IMC of such a test load in a much less burdensome manner through the use of a spray bottle.

To quantify the burden associated with test cloth preparation, DOE investigated the repeatability of the extractor to achieve a specified moisture content. In accordance with appendix D1 and appendix D2, DOE prepared three standard-size test loads and two compact-size test loads, weighed before and after the extractor cycle. For the three standard-size test loads, two test loads were prepared twice and one test load was prepared once, for a total of five extractor tests. For the two compact-size test loads, both were prepared twice, for a total of four extractor tests. The North Star Engineered Products Inc. (formerly Bock) Model 215 extractor, specified in section 3.2 of the DOE clothes washer test procedure at 10 CFR part 430, subpart B, appendix J3 (''appendix J3''), was used in this investigation, with the same extractor spin setting selected for all tests. DOE expects that this extractor is representative of typical clothes dryer testing equipment at commercial test laboratories. The IMC values of this investigation are shown in Table III.3. Note that these IMC values were recorded prior to the use of a spray bottle according to the method in appendix D2.

TABLE III.3—WATER EXTRACTION RESULTS FROM EXTRACTOR INVESTIGATION

| Extractor test | Test load | % IMC (no spray bottle used) | Within range defined by appendix D1? |
|---|---|---|---|
| 1 | Standard #1 | 53.13 | No. |
| 2 | Standard #2 | 55.30 | Yes. |

TABLE III.3—WATER EXTRACTION RESULTS FROM EXTRACTOR INVESTIGATION—Continued

| Extractor test | Test load | % IMC (no spray bottle used) | Within range defined by appendix D1? |
|---|---|---|---|
| 3 | | 55.25 | Yes. |
| 4 | Standard #3 | 54.20 | Yes. |
| 5 | | 53.63 | No. |
| Standard-Size Test Load Range | | 53.1–55.3 | |
| Appendix D1 Range | | 54.0–61.0 | |
| 5 | Compact #1 | 57.51 | Yes. |
| 6 | | 56.77 | Yes. |
| 7 | Compact #2 | 56.81 | Yes. |
| 8 | | 57.51 | Yes. |
| Compact-Size Test Load Range | | 56.8–57.5 | |
| Appendix D1 Range | | 54.0–61.0 | |

For all but two test loads, the extractor produced an IMC within the range of 54.0 to 61.0 percent, as specified in appendix D1; however, two standard-size test loads had IMCs less than 54 percent (the minimum of the range defined in appendix D1). These results confirm that despite the wider range of target IMC values defined in appendix D1 compared to those in appendix D2, the extractor can sometimes lead to an IMC value lower than the target IMC range in appendix D1. Without the moisture content adjustments provided by use of a spray bottle as specified in appendix D2, the previous language of appendix D1 suggests that test loads prepared under appendix D1 may require re-wetting and re-spinning.

As summarized, DOE is amending appendix D1 to allow the use of a spray bottle as necessary following the extractor run to achieve the required IMC range. This will provide a reliable, validated, and burden-reducing approach to ''fine-tune'' IMC values that fall just below the target range, such as those seen in DOE's extractor investigation. This additional direction provides a means to achieve allowable IMC without the need to re-wet and re-spin the test load if the IMC achieved by the extractor is below the target range of IMC.

DOE is not specifying the temperature of the spray bottle water given the amount of time and air exposure that the test load encounters while being spun in the extractor, sprayed, and loaded into the clothes dryer. According to DOE investigative testing, the moisture content provided by the spray bottle is approximately 0.03 percentage points with each spray, up to a maximum of 5.33 percentage points that may be added in the load under appendix D2 to achieve the specified moisture content of the test load of 57.5 ±0.33 percent. Recognizing that without such specification, the temperature of water in the spray bottle could be closer to room temperature (*i.e.,* only slightly higher than AHAM's suggestion of 60 °F), it is implausible that the temperature of the water in the spray bottle would change the temperature of the load enough to impact the dryer performance.

In summary, DOE is aligning appendix D1 with appendix D2 by specifically providing for the use of a spray bottle to add water to test loads that are below the acceptable IMC range minimum of 54.0 percent following the extractor run. DOE is not adding a temperature specification for the spray bottle water.

ii. Final Moisture Content

Section 3.3.1 of appendix D2 specifies that for timer clothes dryers, the test load is dried until the FMC is between 1 and 2.5 percent of the bone-dry weight of the test load. The measured energy consumption is then normalized to determine the energy consumption required to dry the test load to 2-percent FMC, with a field use factor applied to account for the over-drying energy consumption, in section 4.1 of appendix D2. For automatic termination control clothes dryers, section 3.3.2 of appendix D2 specifies that a test is considered valid if the FMC of the test load is 2 percent or less. DOE did not propose amending the FMC requirement of appendix D2 in the July 2019 NOPR.

The California IOUs stated that the 2-percent FMC under the DOE test conditions is appropriate, though suggested that a higher FMC may be appropriate when accounting for additional test conditions, such as changes in clothes dryer settings or a more realistic clothes dryer load. In the absence of any changes to these settings or test load, the California IOUs recommended maintaining the current 2-percent FMC. (California IOUs, No. 29 at p. 20)

Samsung, AHAM, BSH, and GEA commented that requiring an FMC of 2 percent or less promotes over-drying and unnecessary additional energy use; and further, because clothes that are over-dried will typically re-absorb moisture from ambient air during cool-down phases of the drying cycle and after termination of the drying cycle, a higher FMC, between 5 percent and 8 percent, results. Samsung suggested a 4-percent FMC requirement, corresponding to estimated moisture up-take from bone-dry conditions on the 100 percent cotton IEC test load. AHAM and GEA suggested that DOE adopt an FMC range of 3 to 4 percent, with a target of 4 percent. (AHAM, No. 33 at pp. 5, 12; BSH, No. 30 at pp. 1–2, 4; GEA, No. 37 at p. 2; Samsung, No. 36 at p. 2)

BSH and AHAM also referenced the December 2015 Underwriters Laboratory (''UL'') clothes dryer safety requirement in UL 2158, ''North American Dryer Safety Standard'' that the requirement of a cool-down period if the temperature at the clothes dryer's lint filter exceeds 131 °F (55 °C) at the end of the drying cycle as a source of difficulty for ventless condensing clothes dryers in meeting the current 2-percent FMC requirement in appendix D2.[29] BSH commented that due to the drying

[29] UL 2158 can be accessed at *https://standardscatalog.ul.com/standards/en/standard_2158_4.*

process of a condensing clothes dryer with a closed-loop process air system, the FMC increases rapidly during the cool-down period.[30] AHAM and BSH asserted that due to the UL 2158 requirement, attaining an FMC of 2 percent on condensing clothes dryers is impractical, and without costly design changes and adjustments to the test procedure, ventless condensing clothes dryers cannot consistently meet both the new UL 2158 safety limit and the current FMC requirement. BSH suggested a separate FMC target of 4 percent for ventless clothes to compensate for the UL 2158 safety requirement and otherwise agreed with the current 2-percent FMC requirement for vented clothes dryers. (AHAM, No. 33 at pp. 5, 12; BSH, No. 30 at pp. 1–2, 4)

AHAM and BSH also recommended that DOE specify a time limit in which the test load must be weighed after stopping the test cycle to minimize test variation and moisture reabsorption. BSH recommended that the test load be weighed within 10 seconds of the drying cycle termination, and AHAM recommended that the test load be weighed immediately after and within a maximum of 2 minutes after cycle termination. (AHAM, No. 33 at pp. 5, 12; BSH, No. 30 at pp. 1 – 2, 4; GEA, No. 37 at p. 2; Samsung, No. 36 at p. 2)

The current 2-percent FMC requirement using the DOE test cloth was adopted as representative of approximately 5-percent FMC for ''real-world'' clothing, based on data submitted in a joint petition for rulemaking.[31] DOE determined in the August 2013 Final Rule that the specified 2-percent FMC using the DOE test load was representative of consumer expectations for dryness of clothing in field use. 78 FR 49608, 49620–49622, 49610–49611 (Aug. 14, 2013).

DOE reviewed the UL 2158 safety requirements and noted that Clause 12 of UL 2158 requires a cool-down period if the drying cycle air temperature exceeds 131 °F at the end of the drying cycle, as measured at the first lint filter. This cool-down period is required to reduce the temperature of the clothes load to a suitable level before the user is alerted that the drying cycle has ended. As described in Clause 12.1 of UL 2158, this safety standard is in place to reduce the risk of spontaneous ignition of the clothes load. DOE acknowledges that the air temperature limit specified by UL 2158 (*i.e.,* requiring a cool-down period to ensure the temperature at the first lint filter at the end of the drying cycle does not exceed 131 °F) may result in moisture regain by the load. DOE notes that the safety requirement regarding cool-down periods was introduced in the fourth edition of UL 2158 and has been effective since December 2015. In its internal testing since that time, DOE has not identified any systemic problems with any clothes dryer types, including ventless condensing clothes dryers, being able to achieve the required FMC of 2 percent or less, such that amendments to the test procedure would be warranted.

Furthermore, commenters did not provide any test results or data to demonstrate that the maximum 2-percent FMC limit is impracticable or unachievable given the UL 2158 safety requirements. DOE also notes that multiple ventless condensing clothes dryers from various manufacturers have been certified to DOE under the appendix D2 test procedure since the introduction of the safety standard in 2015.

Based on the preceding discussion, DOE is not amending the FMC requirement for either appendix D1 or appendix D2 in this final rule.

Regarding a time limit in which the test load must be weighed after stopping the test cycle, section 3.3 of previous appendix D1 and sections 3.3.1 and 3.3.2 of previous appendix D2 required that the test load be weighed ''after stopping the test cycle'' (for timer clothes dryers) or ''after the completion of the test cycle'' (for automatic termination control clothes dryers). To better quantify the potential reabsorption effects associated with the interval between completing the clothes dryer test cycle and weighing the test cloth, DOE tested seven clothes dryers according to appendix D2, with five different time periods for weighing the test cloth after termination of the drying cycle. During the waiting period, the test cloth remained in the clothes dryer drum with the door closed. These time periods ranged from weighing the test cloth as immediately as practicable after termination of the drying cycle to 30 minutes after termination of the drying cycle. DOE acknowledges that test load FMC may change after completion of the clothes dryer cycle, generally regaining moisture; however, testing found that the moisture content for certain units decreased as the waiting period increased, relative to the immediate weighing.

Figure III.4 shows the change in FMC measured at varying waiting periods relative to the FMC recorded immediately upon removal of the test load after the drying cycle termination.

[30] A ventless condensing clothes dryer recirculates the air used to remove moisture from the load during the entire drying cycle. The clothes dryer uses ambient air or cold water in a heat exchanger to condense the moisture from the air in the drum. The dry air exiting the drum is then reheated and recirculated back into the drum.

[31] The petition was submitted by AHAM, Whirlpool Corporation, General Electric Company, Electrolux, LG Electronics, Inc., BSH, Alliance Laundry Systems, Viking Range, Sub-Zero Wolf, Friedrich A/C, U-Line, Samsung, Sharp Electronics, Miele, Heat Controller, AGA Marvel, Brown Stove, Haier, Fagor America, Airwell Group, Arcelik, Fisher & Paykel, Scotsman Ice, Indesit, Kuppersbusch, Kelon, and DeLonghi, American Council for an Energy Efficient Economy, Appliance Standards Awareness Project, Natural Resources Defense Council, Alliance to Save Energy, Alliance for Water Efficiency, Northwest Power and Conservation Council, and Northeast Energy Efficiency Partnerships, Consumer Federation of America and the National Consumer Law Center. See Docket No. EERE–2011–BT–TP–0054, No. 3.

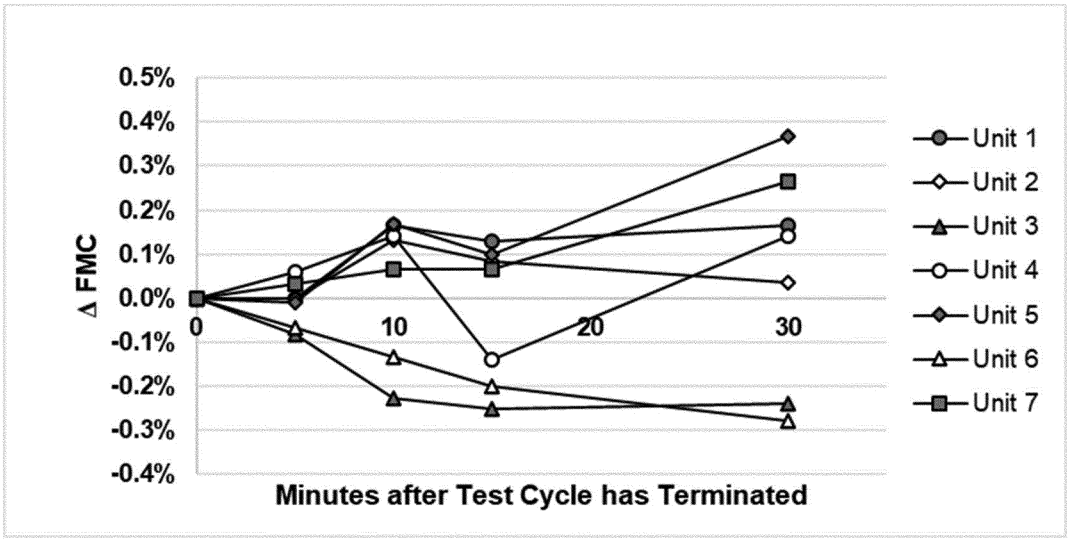


**Figure III.4 Change from Immediately Measured FMC versus Waiting Period after Test Cycle Termination**

As shown in Figure III.4, moisture regain and loss relative to the immediately measured FMC were observed at the various time periods, with more significant changes in FMC as the time periods increased. At the 5-minute waiting period, however, variation in FMC was consistently within 0.1 percentage points of the FMC recorded immediately after the drying cycle terminated for all units tested. According to these results, and in order to ensure repeatability, reproducibility, and representativeness of the FMC measurement, a time limit of 5 minutes, within which the test load must be weighed, appears appropriate to minimize variability in FMC from the value immediately upon completion of the cycle.

As best practice would result in weighing the test load without any unnecessary delay, and DOE has no indication that testing is currently conducted inconsistent with best practices, DOE does not expect any increase in test burden associated with adoption of a reasonable time limit on weighing the test cloth after termination of a drying cycle to ensure repeatable, reproducible, and representative results. Therefore, to limit any potential variability in the test procedure associated with moisture reabsorption following the test cycle, DOE is amending section 3.3 of appendix D1 and sections 3.3.1 and 3.3.2 of appendix D2 to specify that FMC must be recorded within 5 minutes following the termination of the drying test cycle.

iii. Final Moisture Content Requirements for Automatic Termination Control Dryers

Section 3.3.2 of appendix D2 specifies that for automatic termination control dryers, the clothes dryer is operated until the completion of the programmed cycle, including the cool down period. The test procedure provides that, if the FMC is greater than 2 percent, the test is invalid and a new run must be conducted using the highest dryness level setting. In guidance issued on January 10, 2017 (''2017 Guidance''),[32] DOE provided its interpretation that the 2-percent FMC threshold for a valid test also applies to a test run conducted using the highest dryness level setting, if required. As explained in the 2017 Guidance, DOE's interpretation that the 2-percent final moisture content threshold for a valid test should apply to all test cycles conducted according to section 3.3.2 of Appendix D2, including test runs using the highest 2 dryness level setting, is consistent with the EPCA requirements that test procedures must be ''reasonably designed to produce test results'' that measure energy use ''during a representative average use cycle.'' 42 U.S.C. 6293(b)(3). Based on the information presented during the prior rulemaking, during the representative average use of a clothes dryer, clothes are dried to an FMC that is equivalent to 2-percent FMC in the DOE test load.

DOE noted in the July 2019 NOPR that, as part of the August 2013 Final Rule, interested parties submitted a joint comment presenting test results that demonstrate that an FMC of 2 percent using the DOE test cloth is representative of the consumer-accepted dryness level after completion of a drying cycle. 84 FR 35484, 35497 (July 23, 2019); see also 78 FR 49608, 49614 (Aug. 14, 2013). DOE agreed with this conclusion and adopted provisions that specify that a test conducted on the ''normal'' or ''medium'' dryness setting is considered valid only if the FMC is 2 percent or lower. 78 FR 49608, 49621, 49624 (Aug. 14, 2013).

The California IOUs and the Joint Commenters supported DOE's clarification that the second test following a failed first test in which the clothes dryer did not achieve an FMC less than or equal to 2 percent should be held to the same FMC requirements as the first test. The California IOUs stated that the second test should not provide a ''loophole,'' whereby a unit could fail the first test and then use the results of the second test regardless of the FMC. The California IOUs suggested that without this consistency in test procedure and results, clothes dryers that are certified to the second test would not be comparable to those that passed the first test. (California IOUs, No. 29 at p. 20; Joint Commenters, No. 34 at p. 3)

AHAM and Whirlpool expressed concern that it is unclear how

[32] Clothes Dryer Final Guidance issued January 10, 2017. Available at *www1.eere.energy.gov/guidance/detail_search.aspx?IDQuestion=665&pid=2&spid=1.*

verification and enforcement testing would address the requirement that a second test run must meet the required FMC. They suggested that the existing test procedure variation could be enough to cause false findings of non-compliance and may result in a large number of test procedure waiver requests. Whirlpool stated that this requirement would lead manufacturers to conservatively over-dry loads to well below 2-percent FMC, which wastes energy, instead of using the 2-percent FMC as a design target rather than an enforceable performance measure. Whirlpool also suggested that the CEF in the test run with highest dryness level be used regardless of FMC, as Whirlpool asserted that market forces would ensure manufacturers do not intentionally design clothes dryers with unreasonably high FMC. AHAM suggested raising the FMC for all test runs to accommodate concerns regarding non-compliance and test procedure variation. (AHAM, Public Meeting Transcript, No. 23 at pp. 38–39; AHAM, No. 33 at pp. 5–6; Whirlpool, No. 32 at p. 2)

GEA suggested that there should be no FMC requirement for a second run test under the appendix D2 procedure. GEA noted that the second test run is already performed at the maximum dryness setting, and the clothes dryer is, therefore, subject to a higher performance condition and corresponding increased energy usage. GEA suggested that using the highest dryness setting for the second run ensures appropriate energy usage by a compliant clothes dryer regardless of the FMC, as the clothes dryer is unable to use any more energy for the selected cycle (given that the highest dryness setting was selected). GEA further commented that any remaining moisture in clothing after a cycle is complete on the highest dryness setting is a performance concern, and not an energy efficiency concern, and is therefore outside the scope of the appliance standards program as established under EPCA. (GEA, No. 37 at pp. 2–3)

As discussed, the 2-percent FMC requirement was developed through collaboration with, and consideration of data submitted by, interested parties as part of the August 2013 Final Rule. 78 FR 49608, 49614 (Aug. 14, 2013) Interested parties have not presented any data or information since then that would suggest changes in consumer expectations of dryness levels. Therefore, DOE continues to agree with the conclusion from the August 2013 Final Rule that an FMC of 2 percent using the DOE test cloth is representative of the consumer-accepted dryness level after completion of a drying cycle. Thus, a test that does not produce an FMC of 2 percent or less would not be reflective of representative energy use, in that FMC values at or below this threshold represent consumer-accepted dryness.

DOE notes that clothes dryer models are certified to DOE and available on the market representing the entire range of venting configurations (vented and ventless), capacity categories (standard and compact), product configurations (stand-alone clothes dryer and combination washer/dryer), energy sources (120V electric, 240V electric, and gas), and drying technologies (electric resistance, water-cooled condensing, air-cooled condensing, and electric heat pump) from multiple manufacturers within each product attribute. The range of available product offerings indicates the ability to achieve a 2-percent FMC across the entire spectrum of clothes dryer design characteristics currently available on the market. Furthermore, DOE has not received any waiver requests, either before or after publishing the 2017 Guidance, regarding an inability to achieve an FMC value of 2 percent or less.

DOE further notes that 2-percent FMC is not a design ''target,'' but rather a maximum threshold. Any FMC value of 2 percent or less (*i.e.,* 0–2 percent) would represent a valid test. DOE has observed in its testing FMC values spanning the full range of 0–2 percent. Table III.4 shows the range in FMC values from DOE's testing of 30 different consumer clothes dryers under appendix D2 at a normal dryness setting. These units spanned multiple manufacturers, product classes, capacities, and drying technologies.

TABLE III.4—FMC RANGES FROM DOE TESTING

| FMC range (%) | Number of units |
|---|---|
| 0–0.5 | 3 |
| 0.5–1.0 | 8 |
| 1.0–1.5 | 10 |
| 1.5–2.0 | 9 |

In summary, drying to an FMC of 2 percent or less using the DOE test cloth is representative of the consumer-accepted dryness level of a clothing load after completion of a drying cycle. The prevalence of certified consumer clothes dryer models spanning the entire spectrum of design characteristics indicates no inherent inability to achieve an FMC of 2 percent or less for any clothes dryer type currently available on the market. For these reasons, as supported by the preceding discussion, DOE is amending appendix D2 as proposed to specify that the 2-percent FMC requirement applies to all appendix D2 test runs (*i.e.,* including the second test run conducted using the highest dryness level setting, if required). If the basic model under test fails to achieve an FMC of 2 percent or less when tested at the highest dryness level setting, the measured energy consumption of the clothes dryer would not reflect a representative average use cycle, since it would not have dried the clothing to a consumer-accepted dryness level. Such test results may not be used for certification of compliance with energy conservation standards.

Finally, in the July 2019 NOPR, DOE also proposed to amend the nomenclature of section 4.1 through section 4.4 of appendix D2 to clarify that the measured energy consumption values represented by $E_{ce}$, $E_{ge}$, $E_{gg}$, and $E_{cg}$, respectively, reflect the energy required to achieve an FMC of 2 percent or less. 84 FR 35484, 35496–35497 (July 23, 2019).

Given that there were no comments or concerns with the nomenclature proposed in the July 2019 NOPR, in this final rule DOE is amending the nomenclature of section 4.1 through section 4.4 of appendix D2 as proposed in the July 2019 NOPR.

f. Annual Drying Cycles and Hours Per Year

Section 4.5 of appendix D1 and appendix D2 assigns the representative average use for clothes dryers at 283 drying cycles per year. This estimate was developed based on data provided by the 2005 Energy Information Administration's ''Residential Energy Consumption Survey'' (''RECS''). 76 FR 972, 1010 (Jan. 6, 2011). In the 2019 TP NOPR, DOE did not propose an updated value for the annual drying cycles and hours per year, declining to make changes based on a limited field study conducted by NEEA. 84 FR 35484, 35492 (July 23, 2019). DOE noted that its current estimate was developed based on data from the most recent version of RECS at the time the cycles-per-year value was established. 84 FR 35484, 35491 (July 23, 2019). DOE stated that it was continuing to seek data regarding the cycles per year. 84 FR 35484, 35492, 35504 (July 23, 2019).

AHAM commented that the 2015 version of RECS indicates that 238 clothes dryer cycles per year would be more appropriate, as it is based on more recent and nationally representative data. AHAM commented that a reduction in number of annual clothes

dryer cycles would be consistent with the trend for the average number of annual clothes washer cycles, which based on RECS 2015 data, AHAM asserted is 241. AHAM suggested that DOE update the number of annual clothes dryer cycles based on more recent national data. (AHAM, No. 33 at pp. 4–5)

To develop the estimate of 283 clothes dryer cycles per year previously specified in the test procedure, DOE utilized the 2005 RECS data to estimate the average number of clothes dryer cycles per year based on clothes washer cycle data and a clothes dryer usage factor (the percentage of washer loads dried in a clothes dryer).[33] The 2015 RECS data, which included cycle data specific to clothes dryers, was first released in April 2017, and then subsequently updated multiple times with the most recent update, Version 4, released in December 2018.[34] DOE calculated the average number of clothes dryer cycles per year, using the reported number of laundry loads (clothes dryer cycles) dried per week for each sample home in the 2015 RECS data set with a clothes dryer, which is the same methodology DOE used to develop the estimates of 283 clothes dryer cycles per year based on the 2005 RECS data set. Using this methodology, DOE calculated 236 cycles per year from the 2015 RECS data. Because this estimate is based on more recent consumer usage data than the previous estimate of 283 cycles pear year, DOE concludes that the estimate of 236 cycles per year is a more representative estimate of the average number of annual clothes dryer cycles at this time. DOE notes that its estimate of 236 clothes dryer cycles per year is very close to the estimate of 238 cycles per year presented by AHAM.

DOE is updating the estimate of the representative average annual number of clothes dryer cycles per year in section 4.5 of appendix D2. This update maintains the methodology used to establish the average number of clothes dryer cycles per year and updates the resulting average based on an update to the underlying data source (*i.e.,* RECS), as recommended by commenters. The updated estimate will impact the measured energy efficiency of clothes dryers by reducing the portion of annual hours in active mode, thereby increasing the per-cycle standby mode and off mode energy consumption as determined in section 4.5 of appendix D2. Also, DOE notes that the current energy conservation standards were developed based on the 283 cycles per year estimate. As such, the updated clothes dryer annual cycles per year estimate will be required beginning on the compliance date of amended energy conservation standards for clothes dryers, should standards be amended. Prior to any such amendment to the energy conservation standards, the DOE test procedure will continue to use the estimate of 283 clothes dryer cycles per year in the per-cycle standby mode and off mode energy consumption calculation.

2. Inactive and Off Mode Power Measurements

Section 3.6 of appendix D1 and appendix D2[35] provides the instructions for measuring standby (''inactive'') mode[36][37] and off mode[38] power on the clothes dryer. The per-cycle combined total energy consumption of a clothes dryer includes the combined representative measures of inactive mode and off mode power in sections 4.5 and 4.6, respectively, of appendix D1 and appendix D2. The test procedure distinguishes between inactive mode and off mode. However, when only one of the low-power modes is present, regardless of whether the low-power mode is considered inactive mode or off mode, the same measurement and calculation is performed.[39]

The prior test procedure for measuring inactive and/or off mode power is as follows. Section 3.6.1 of appendix D1 and appendix D2 instructs inactive mode to be measured, if the clothes dryer has an inactive mode, with the resulting measurement represented by the symbol $P_{IA}$. Similarly, section 3.6.2 of both appendices instructs off mode power to be measured, if the clothes dryer has an off mode, with the resulting distinct power measurement represented by symbol $P_{OFF}$. In section 4.5 of both appendices, if a clothes dryer has either inactive mode or off mode (but not both), the measured power is multiplied by 8,620, representing the combined annual hours that the clothes dryer is not in active mode (*i.e.,* idle). Alternately, if a clothes dryer has both inactive mode and off mode (*e.g.,* an electronic control panel that also provides a hard off switch that can completely disconnect all power to the product), the power of each mode is measured and multiplied by one-half of 8,620 (*i.e.,* 4,310), and the results are summed.[40] As these sections were structured, a determination first had to be made whether the low-power mode(s) that exists on the clothes dryer meets the definition of inactive mode or off mode—even though the same calculation applies, yielding the same end result, regardless of the distinction.

As discussed in the July 2019 NOPR, the ''off'' state on some appliances is achieved through a software/firmware action (*i.e.,* through a ''soft switch'') rather than a hard on/off switch (*i.e.,* a switch that physically breaks the connection to the mains power supply), and it may not always be clear whether the product is providing any active mode or standby function while in the ''off'' state. 84 FR 35484, 35495. To address questions regarding the potential difficulty in determining whether the low-power mode is considered inactive mode or off mode without needing to remove a product's console to access the electrical schematic and/or determine if the switch is a ''hard'' switch or ''soft''

[33] The 2005 RECS provided data regarding how often a clothes dryer was used following a clothes washer cycle, with answers of ''every time you wash clothes'', ''use it for some, but not all loads of wash'', ''use it infrequently''. Using that information and clothes washer usage data, the estimate of 283 annual clothes dryer cycles was developed.

[34] The most recent RECS microdata can be accessed at *www.eia.gov/consumption/residential/data/2015/index.php?view=microdata.*

[35] In this final rule, section 3.6 of appendix D2 is being renumbered as section 3.5, as a result of removing obsolete provisions from the test procedures. See section III.E.5 of this final rule for additional details.

[36] Section 1.17 of appendix D1 and section 1.18 of appendix D2 define ''standby mode'' as any mode in which the product is connected to a mains power source and offers one or more of the following user-oriented or protective functions that may persist for an indefinite period of time: (1) A function that facilitates the activation of other modes (including activation or deactivation of active mode) by remote switch (including remote control), internal sensor, or timer; or (2) continuous functions, including information or status displays (including clocks) or sensor-based functions. The definition also specifies that a timer is a continuous clock function (which may or may not be associated with a display) that provides regular, scheduled tasks (*e.g.,* switching) and that operates on a continuous basis.

[37] Section 1.12 of appendix D1 and section 1.13 of appendix D2 define ''inactive mode'' as a standby mode that facilitates the activation of active mode by remote switch (including remote control), internal sensor, or timer, or that provides continuous status display.

[38] Section 1.15 of appendix D1 and section 1.16 of appendix D2 define ''off mode'' as a mode in which the clothes dryer is connected to a mains power source and is not providing any active mode or standby function, and where the mode may persist for an indefinite period of time. The definition further states that an indicator that only shows the user that the product is in the off position is included within the classification of an off mode.

[39] Distinguishing inactive mode from off mode is not an issue when both are present. When both modes are present, inactive mode and off mode can be distinguished from each other based on the measured energy use; *i.e.,* inactive mode will result in a higher measured energy use than off mode.

[40] This calculation represents an estimate that such a clothes dryer would spend half of its low-power mode hours in inactive mode, and the other half of its low-power mode hours in off mode.

electronic switch, DOE proposed the following changes to appendix D1 and appendix D2 in the July 2019 NOPR:

• Replace the symbols $P_{IA}$ and $P_{OFF}$, for measuring inactive mode [41] and off mode, respectively, with $P_{default}$ and $P_{lowest}$, including revisions to the calculation symbols in section 3.6.1 of appendix D1 and 3.5.1 of appendix D2. $P_{default}$ represents the low-power measurement if only one power level is observed. If two power levels are observed, $P_{lowest}$ represents the off mode power measurement and $P_{default}$ represents the inactive mode power measurement.

• For clothes dryers with both an inactive mode and off mode (*i.e.,* clothes dryers with electronic controls that offer an optional switch (or other means) that can be selected by the end user to achieve a lower power state than the default inactive/off mode state),[42] section 3.6.2 of appendix D1 and 3.5.2 of appendix D2 require that, after performing the measurement in section 3.6.1 of appendix D1 or 3.5.1 of appendix D2, the switch (or other means) be activated to the position resulting in the lowest power consumption and the measurement procedure described in section 3.6.1 and 3.5.1, respectively, be repeated. Measure and record the average power consumption as the lowest standby/off mode power, $P_{lowest}$, in watts.

• Revise section 3.6 of appendix D1 and newly renumbered section 3.5 of appendix D2 to state that for a clothes dryer that takes time to automatically enter a stable inactive/off mode state from a higher power state, as discussed in Section 5, Paragraph 5.1, note 1 of IEC Standard 62301, allow sufficient time for the clothes dryer to automatically reach the default inactive/off mode state before proceeding with the test measurement. Replace the term ''lower power state'' with ''default standby/off mode state,'' recognizing that the lower power state that the clothes dryer reaches by default may be either a standby (inactive) mode or an off mode.

• Perform standby mode and off mode testing after completion of an active mode drying cycle; after removing the test load; without changing the control panel settings used for the active mode drying cycle; with the door closed; and without disconnecting the electrical energy supply to the clothes dryer. DOE noted that the order of sections within the clothes dryer test procedures suggests that the standby mode and off mode measurement (section 3.6 of appendix D1 and section 3.5 of appendix D2) is performed after the active mode test cycle (sections 3.3 through 3.5 of appendix D1 and sections 3.3 and 3.4 of appendix D2); therefore, the proposed approach likely reflects current practice within the industry. 84 FR 35484, 35495–35496 (July 23, 2019).

AHAM supported the proposal to amend the clothes dryer test procedures to use nomenclature, symbols, and structure, procedural instructions, and assigned annual hours based on observable and measurable characteristics of the clothes dryer, rather than based on knowledge of the control panel switch type or internal functionality of the clothes dryers. AHAM supported DOE's proposed modification to the sequence of testing for standby or off mode power measurement to perform the standby mode and off mode testing after the active mode testing, which reflects current practice by test laboratories. (AHAM, No. 33 at p. 9)

In this final rule, DOE is amending the test procedure in accordance with the proposals outlined above, adding new symbols to represent the ''default'' and ''lowest'' standby power measurements, along with instructions for their applications based on observable characteristics of the clothes dryer. DOE is also amending appendix D1 and appendix D2 to specify that inactive and off mode tests must be performed after completion of an active mode drying cycle, and the unit must be allowed sufficient time to automatically reach its default inactive/off mode power state before performing measurements. Under the revised section 3.6 of appendix D1 and newly renumbered section 3.5 of appendix D2, DOE is requiring that the same sequence of measurements be performed as in the previous section 3.6 in both appendix D1 and appendix D2, to yield the same power measurement(s) for clothes dryers with inactive mode, off mode, or both. Further, DOE is specifying that the same annual hours that were previously specified shall be applied to the average power measurement(s) in section 4.5 of both appendix D1 and appendix D2. DOE has determined that these amendments to appendix D1 and appendix D2 will not impact the measured efficiency of clothes dryers, because the amendments are amendments to nomenclature and provide additional direction.

3. General Test Procedure Provisions at 10 CFR 430.23(d)

The general test procedure provisions for clothes dryers in 10 CFR 430.23(d) include methods for calculating the estimated annual operating cost, CEF, and other useful measures of energy consumption using appendix D1. In the July 2019 NOPR, DOE proposed to amend the test procedure to provide explicitly for calculating each of these metrics using appendix D2 as well as to include methods of calculating the estimated annual energy use.

AHAM and the Joint Commenters supported DOE's proposal to extend calculations of energy consumption to appendix D2 and to add a new calculation of annual energy use, stating that this would ensure consistency in the test procedure. (AHAM, No. 33 at p. 9; Joint Commenters, No. 34 at p. 3)

DOE is adopting the test procedure amendments as proposed in the July 2019 NOPR to provide explicitly for the calculation of useful measures of energy consumption, including estimated annual energy use, using appendix D2.

4. Rounding Requirements for Reported Values

In the July 2019 NOPR, DOE proposed adding a new section at 10 CFR 429.21(c) to specify the rounding requirements of all numeric reported values for clothes dryers, including CEF, capacity, voltage, and hourly Btu rating. Similarly, DOE proposed adding the same rounding requirement for the capacity measurement in section 3.1 of both appendix D1 and appendix D2, which would add specificity to the measurement of drum capacity as it relates to determining whether a compact-size load (for a drum capacity less than 4.4 cubic feet) or standard-size load must be used for testing. The proposed rounding requirements for CEF, capacity, voltage, and Btu rating would maintain consistency with the level of precision currently provided in DOE's Compliance Certification Management System (''CCMS'').

DOE also proposed to specify further the rounding instructions provided at 10 CFR 430.23(d)(1) (renumbered to paragraph (d)(2) as amended in this document) pertaining to estimated annual operating cost. Previously, the rounding instructions for an electric clothes dryer were provided in paragraph (d)(1)(i)(C). DOE proposed moving the rounding instructions to paragraph (d)(1)(i) to clarify that the rounding provision applies to the product of all three factors multiplied in paragraphs (d)(1)(i)(A), (B), and (C). Similarly, for gas clothes dryers, DOE

[41] Inactive mode is the only type of standby mode required to be measured in appendix D1 and appendix D2.

proposed to move the rounding instructions from its previous location embedded within paragraph (d)(1)(ii)(B) to the higher-level paragraph at paragraph (d)(1)(ii).

AHAM and GEA supported DOE's proposal to specify the rounding requirements of all numeric reported values for clothes dryers. Additionally, AHAM and GEA requested that DOE clarify the rounding requirements for scale weight measurements. AHAM recommended the rounding of scale weight values to the nearest whole number digit, asserting the absence of such a specification in conjunction with the required minimum scale resolution may result in an unacceptable range of variation.[43] These commenters stated that rounding to the nearest whole number for FMC is acceptable based on the current state of the clothes dryer test procedure, the measurement error, and laboratory capabilities. (AHAM, No. 33 at pp. 9–10, 12; GEA, No. 37 at p. 2)

GEA asserted that rounding to the nearest whole number for moisture content resolves the instrumentation resolution issue and is in keeping with ASTM's best practice guidance. (GEA, No. 37 at p. 2) AHAM reported that its members have noted that there is inherent measurement variation (compounded tolerance) that can cause a theoretical FMC of 2 percent to be reported as high as 3 percent.[44] AHAM recommended a resolution for scales of at least 0.005 pounds with a maximum error of no greater than 0.1 percent of any measured value. AHAM also recommended specifying the same scale be used for bone-dry weight, IMC, and FMC measurements. AHAM suggested that this change would not add cost to the test as it expects laboratories already have instrumentation capable of this resolution. (AHAM, No. 33 at pp. 9–10, 12) As discussed in section III.C.4 of this document, GEA supported all requests for tighter tolerances in the AHAM comments. GEA agreed that the current test procedure allows for tolerance stacking issues that introduce variability in the DOE verification process and reported that the suggested tolerances would not increase test burden or cost. (GEA, No. 37 at p. 2)

DOE proposed rounding requirements in the July 2019 NOPR, which implicate the weighing scale resolution,[45] as noted by the comments received, in ensuring repeatable and reproducible test results. DOE acknowledges that, in the absence of revised scale resolution requirements, hypothetically a variation as described by AHAM could occur. However, under current testing practice this is not occurring. Based on interactions with testing laboratories, DOE is aware that, in general, test laboratories are currently measuring test load weight using instrumentation with a scale resolution of 0.001 pounds and a maximum error of no greater than 0.1 (the value suggested by AHAM) percent of any measured value. This level of precision addresses the issue of compounded tolerance by effectively bounding a 2-percent FMC measurement between a range of 1.8–2.2 percent rather than 1.4–2.6 percent. Accordingly, instead of addressing AHAM and GEA's concern through further rounding amendments, DOE is addressing the issue by codifying the current practice to ensure that the issue as described by commenters does not occur in the future. Also, rounding to the nearest whole number for FMC as suggested by these commenters would reduce the stringency of the requirement, given that an FMC of 2.4 percent could be rounded down to 2 percent, effectively raising the FMC requirement to be less than 2.5 percent as opposed to the prior requirement of 2 percent. For these reasons, DOE is not amending FMC rounding requirements at this time. Instead, DOE is amending the scale tolerance and maximum error requirements to align with the current capabilities of test laboratories, thereby codifying this level of precision and addressing the issues of compounding tolerance raised by commenters. Specifically, DOE is amending the scale resolution requirements to be 0.001 pounds with a maximum error of no greater than 0.1 percent of any measured value in section 2.4.1 of both appendix D1 and appendix D2.

DOE received no comments pertaining to the other specific rounding requirements proposed in the July 2019 NOPR. DOE is adopting all proposed rounding requirement changes from the July 2019 NOPR in the newly added 10 CFR 429.21(c).

5. Optional Usage of Appendix D1 or Appendix D2

As discussed, manufacturers must use either appendix D1 or appendix D2 to demonstrate compliance with the applicable energy conservation standards, and must use a single appendix for all representations, including certifications of compliance.[46] The current efficiency standards are based on appendix D1. Appendix D1 tests timed drying cycles, and accounts for clothes dryers with automatic termination controls by applying a higher field use factor to units that have this feature. Appendix D2 tests ''normal'' automatic termination cycles.

NEEA, the California IOUs, NRDC, CEE, Energy Solutions, and Samsung recommended that DOE require testing under appendix D2 only, and delete appendix D1. NEEA commented that ENERGY STAR has now labeled 286 clothes dryer models from 18 different manufacturers with appendix D2 test procedure data, with an Environmental Protection Agency (''EPA'') estimated ENERGY STAR model market penetration of 35 percent. NEEA further commented that DOE reports that 269 unique models (43.5 percent) in its CCMS database were tested according to appendix D2 and 350 unique models (56.5 percent) were tested under appendix D1. The California IOUs, NEEA, and Samsung asserted that manufacturers have had sufficient time to adapt to appendix D2. These commenters suggested that the intention of having both appendix D1 and appendix D2 available for manufacturers was to ease the transition to the more representative automatic cycle termination test of appendix D2, and now that the appendix D2 test procedure has been adopted by ENERGY STAR and is commonly used, there no longer appears a need to test a model to appendix D1. (NRDC, No. 35 at pp. 1–2; CEE, No. 27 at pp. 1–3; California IOUs, No. 29 at pp. 16–19; Energy Solutions, Public Meeting Transcript, No. 23 at p. 56; Samsung, No. 36 at p. 2; NEEA, No. 38 at pp. 3–9, 18)

The California IOUs, CEE, NRDC, and NEEA further asserted that appendix D1 artificially inflates the efficiency performance of units with poorly functioning automatic cycle termination features, since it applies a uniform field

[43] Section 2.4.1 of appendices D1 and D2 specify that the weighing scale for test cloth shall have a range of 0 to a maximum of 60 pounds with a resolution of at least 0.2 ounces, and a maximum error no greater than 0.3 percent of any measured value within the range of 3 to 15 pounds. AHAM suggested that applying this allowable error to the weight of the bone-dry test cloth and test cloth after the test cycle, with a measured FMC of 2 percent, could in fact be as high as 2.4 percent or as low as 1.6 percent. AHAM suggested that rounding FMC would eliminate the need to resolve issues with scale resolution that result in potentially misreporting FMC.

[44] AHAM applied the maximum allowable measurement error of ±0.3 percent to the bone-dry test cloth weight and final test cloth weight measurements. AHAM stated that a final FMC value of 2 percent could yield a measurement between 1.4 percent and 2.6 percent, given the allowable measurement error of ±0.3 percent.

[45] Rounding requirements relate to the number of significant digits of the measured value, which are dictated by the resolution of the weighing scale.

[46] ENERGY STAR certification requires testing using appendix D2. The ENERGY STAR clothes dryer specification can be found at *www.energystar.gov/products/appliances/clothes_dryers/partners.*

use factor to all units with such a feature, impacting efficiency rank order. However, the California IOUs also suggested that as clothes dryers deploy improved automatic termination controls and clothes dryer operations, results from appendix D1 may not always be higher than those from appendix D2, an assertion that the California IOUs stated is supported by the 2019 PG&E testing. One unit from the PG&E test sample of four models had a higher CEF value using appendix D2 as compared to appendix D1. NEEA also cited the PG&E data, and both NEEA and the California IOUs commented that recent DOE-funded clothes dryer testing at Oak Ridge National Laboratory (''ORNL'') and PNNL similarly confirmed that the same clothes dryer models tend to achieve a higher efficiency value when tested to the appendix D1 test procedure than when tested to the appendix D2 test procedure, though the observed differences were not consistent across all models. Based on those reports,[47] NEEA stated that: (1) CEF values dropped roughly 18 percent when tested according to appendix D2, and the efficiency rank order among the tested models changed as well; (2) on average, the appendix D1 loads had five times the FMC than the appendix D2 loads at termination, but all FMCs were within acceptable limits for both test procedures, which implies that the energy use measured under appendix D1 will be less than the energy use measured under appendix D2 for the same clothes dryer, as clothes dryers remove more moisture under appendix D2; and (3) drying times increased by roughly 80 percent when tested according to appendix D2. (NRDC, No. 35 at pp. 1–2; CEE, No. 27 at pp. 1–3; California IOUs, No. 29 at pp. 16–19; NEEA, No. 38 at pp. 3–9, 18)

NEEA, the California IOUs, CEE, and NRDC stated that testing all models to the same procedure would facilitate comparison of performance between them, increasing the utility of the CCMS database and ENERGY STAR certification. NRDC and NEEA also suggested that using a single, uniform test procedure would allow for efficiency labeling of clothes dryers under the Federal Trade Commission (''FTC'') EnergyGuide labelling program. (NRDC, No. 35 at pp. 1–2; CEE, No. 27 at pp. 1–3; California IOUs, No. 29 at pp. 16–19; NEEA, No. 38 at pp. 3–9, 18)

NRDC and the California IOUs suggested that because the current standards are based on appendix D1, it might be more appropriate to implement the retirement of appendix D1 during the next standards rulemaking, and they urged DOE to do so if it is not possible in this final rule. (NRDC, No. 35 at pp. 1–2; California IOUs, No. 29 at pp. 16–19)

AHAM opposed the removal of appendix D1 and mandatory use of appendix D2. AHAM did not support the existence of different test procedures to demonstrate compliance with the standard, but recognized that manufacturers must currently use a different test procedure to demonstrate ENERGY STAR eligibility for clothes dryers than compliance with energy conservation standards. AHAM stated that because manufacturers have already invested in developing products under this circumstance, it would not be equitable to change the status quo at this time. Accordingly, AHAM urged DOE to maintain both appendices, with appendix D2 being optional as an alternative to appendix D1. (AHAM, No. 33 at p. 11)

A majority of the clothes dryers on the market continue to test under appendix D1. DOE notes that 746 clothes dryer models (62.6 percent) listed in the CCMS database are certified to appendix D1, as compared to 445 models (37.4 percent) to appendix D2. DOE recognizes that under appendix D2, measured CEF values may be lower than CEF values measured under appendix D1. As discussed, appendix D2 includes methods for more accurately measuring the effects of automatic cycle termination and represents a significantly different testing methodology that may impact the energy consumption of some clothes dryers more than others. The current energy conservation standards are based on the test procedure in appendix D1, and to the extent that measured CEF under appendix D2 is lower than the measured CEF under appendix D1, this difference does not result in products being able to demonstrate compliance with a lower efficiency. For these reasons, DOE is maintaining the appendix D1 and appendix D2 test procedures and is continuing to allow certification in accordance with either test procedure.

6. Cycle Time Reporting

Manufacturers are not currently required to report cycle time as part of the certification process. In response to the July 2019 NOPR, DOE received comments regarding the reporting of cycle times to inform consumer purchasing decisions.

AHAM stated that the purpose of the energy conservation standards program is to regulate the efficiency of the product, not to inform consumers about all of the different factors that could affect their purchase. AHAM asserted that, while DOE should consider the impact of energy conservation standards on performance factors such as drying time, it is not appropriate for DOE to collect data on and create requirements for performance factors. AHAM questioned whether collecting data on drying time was permissible under EPCA. (AHAM, Public Meeting Transcript, No. 23 at pp. 83–84)

NEEA suggested that DOE should require manufacturers to report drying time when testing using appendix D2, because certain efficient clothes dryers might achieve higher efficiency by taking a very long time to dry clothes. (NEEA, Public Meeting Transcript, No. 23 at pp. 79–80) NEEA and PG&E encouraged DOE to require reporting of cycle times, suggesting that cycle time is a performance feature that consumers value. (NEEA, No. 38 at pp. 3, 12–16, 18; PG&E, Public Meeting Transcript, No. 23 at pp. 80–81)

As stated, EPCA requires that the test procedures prescribed or amended by DOE be reasonably designed to produce test results which measure energy efficiency, energy use, or estimated annual operating cost of a covered product during a representative average use cycle or period of use, and not be unduly burdensome to conduct. (42 U.S.C. 6293(b)(3)) DOE may require each manufacturer of a covered product to submit information or reports with respect to energy efficiency or energy use of such covered products to ensure compliance with the requirements of EPCA. (42 U.S.C. 6296(d)) DOE recognizes that cycle time is a relevant consideration under the current product class structure.

On December 16, 2020, DOE published a final rule (''December 2020 Final Rule'') establishing a separate product class for consumer clothes dryers that offer cycle times for a normal cycle of less than 30 minutes. 85 FR 81359.[48] On January 19, 2021, the States of California, Connecticut, Illinois, Maine, Michigan, Minnesota, New Jersey, New Mexico, New York, Nevada, Oregon, Vermont, and Washington, the Commonwealth of Massachusetts, the District of Columbia, and the City of

[47] Residential Clothes Dryer Performance Under Timed and Automatic Cycle Termination Test Procedures, Kyle Gluesencamp, ORNL, October 2014; Clothes Dryer Automatic Termination Sensor Evaluation: Volume 1: Characterization of Energy Use in Residential Clothes Dryers, W. TeGrotenhus, Ph.D., PNNL, September 2014.

[48] The December 2020 Final Rule also established short-cycle product classes for residential clothes washers.

New York filed a petition for review of the December 2020 Final Rule in the Second Circuit. Shortly thereafter, two other groups of petitioners filed petitions for review of the December 2020 Final Rule. The Alliance for Water Efficiency, the U.S. Public Interest Research Group, and Environment America filed a petition for review of that final rule in the Seventh Circuit on January 17, 2021, and the Sierra Club filed a petition for review of that final rule in the Ninth Circuit on February 12, 2021. After transfer of the Seventh and Ninth Circuit petitions for review, all three cases were consolidated in the Second Circuit. Briefing on the merits is currently stayed through October 1, 2021, while DOE reviews the December 2020 Final Rule. Additionally, on April 2, 2021, AHAM petitioned DOE to reconsider the December 2020 Final Rule that established and amended standards for short-cycle residential clothes washers and dryers.[49] In its petition AHAM requested that DOE withdraw the December 2020 Final Rule. (*Id.* at p. 19)

DOE is re-evaluating the analysis in the short-cycle product class determination pursuant to Executive Order 13990, *Protecting Public Health and the Environment and Restoring Science to Tackle the Climate Crisis.* In light of the on-going review, DOE is not adopting reporting requirements for cycle time in this final rule.

*E. Formatting Changes and Typographical Errors*

To improve the readability of the text in certain sections of appendix D1 and appendix D2, DOE is making minor typographical corrections and formatting modifications as discussed in the following paragraphs. These minor modifications do not change the substance of the test methods and do not impact the measured energy use.

1. ''Conventional'' and ''Vented'' Nomenclature

Previously, appendix D1 and appendix D2 defined the term ''conventional clothes dryer'' as a clothes dryer that exhausts the evaporated moisture from the cabinet. Appendix D1, section 1.7; appendix D2, section 1.8. This definition is synonymous with a ''vented clothes dryer.'' Conversely, ''ventless clothes dryer'' is defined as a clothes dryer that uses a closed-loop system with an internal condenser to remove the evaporated moisture from the heated air. Appendix D1, section 1.19; appendix D2, section 1.21. The moist air is not discharged from the cabinet. *Id.*

The product classes in DOE clothes dryer energy conservation standards use the terms ''vented'' and ''ventless'' to refer to the different methods used by the clothes dryer to remove moisture from the cabinet. 10 CFR 430.32(h)(3). To provide consistency between these product classes and the terminology used in the clothes dryer test procedures, DOE is replacing the word ''conventional'' with ''vented'' throughout both appendix D1 and appendix D2. This change affects the nomenclature only and does not affect the classification of clothes dryers or conduct of the test procedure for any clothes dryers.

2. Symbol Definitions

Previously, appendix D1 and appendix D2 included inconsistent use of symbol definitions for the measured bone-dry weight and moisture content values. DOE is adding the symbol definition for bone-dry weight ($W_{bonedry}$) to section 3.4.1 of both appendices, where it is first referenced. DOE is changing the symbol definitions for moisture content of the wet test load (previously $W_w$) and moisture content of the dry test load (previously $W_d$) to IMC and FMC, respectively, to better differentiate these percentage values from $W_{bonedry}$, which is a weight value. See section 4.1 of both appendix D1 and appendix D2. Similarly, DOE is also adding the symbol definitions IMC and FMC to section 3.4.2 and section 3.4.3, respectively, where these values are first referenced in both appendix D1 and appendix D2. DOE is also updating the symbols used throughout section 4 of both appendices in each calculation in which these terms are used. The additions and revisions of these symbol definitions will more readily provide an understanding of the measured values associated with each of these symbols, as well as improve the readability of subsequent sections of the test procedures where these symbols are referenced.

3. Removal of Duplicate Instructions for Test Load Preparation

Section 2.7.1 and section 2.7.2 of both appendix D1 and appendix D2 provide instructions for preparing a compact-size clothes dryer load and a standard-size clothes dryer load, respectively. Each section previously specified the required load weight and then provided the same instructions for preparing a damp test load before loading. DOE is restructuring section 2.7.1 and section 2.7.2 in each appendix to remove this duplication. For both appendices, the revised section 2.7.1 includes a table specifying the required test loads for standard-size and compact-size clothes dryers, in addition to the requirement that each test load must consist of energy test cloths and no more than five energy stuffer cloths. For both appendices, the revised section 2.7.2 provides the procedure for dampening the test load. These amendments do not change the conduct of the test procedure for either appendix D1 or appendix D2 but improve readability of the test procedures.

4. Typographical Errors

In this final rule, DOE is correcting the following typographical errors in appendix D1 and appendix D2:

Section 1.5 and section 2.6 of appendix D1 and section 1.6, section 2.7.1, and section 2.7.2 of appendix D2 used the term ''test clothes,'' where ''test cloths'' should have been used instead. Section 1.16 of appendix D2 misspelled the term ''classification'' in the definition of ''off mode.''

Section 2.4.1 of both appendix D1 and appendix D2 contained section numbering errors. Previously, section 2.4.1 was titled *Weighing scale for test cloth* and included specifications for the scale used to weigh the test loads, and the section that followed was incorrectly numbered as section 2.4.1.2 *Weighing scale for drum capacity measurements.* DOE is correcting this in both appendix D1 and appendix D2 by inserting a new title, section 2.4.1 *Weighing scales,* and renumbering existing section 2.4.1 *Weighing scale for test cloth* as section 2.4.1.1.

The calculation of the total per-cycle electric clothes dryer energy consumption in section 4.1 of appendix D1 referenced an undefined symbol ''$E_{tt}$'', which should instead have been ''$E_t$'', the total energy consumed during the test cycle as recorded in section 3.4.5 of appendix D1. The word ''for'' was also missing from the wording of the description of the 1.04 field use factor in section 4.1 of appendix D1.

In addition, section 4.3 of both appendix D1 and appendix D2 referenced the symbol ''$E_{ge}$'', which should instead have been ''$E_{gg}$'', the calculated gas clothes dryer gas energy consumption per cycle.

5. Removal of Obsolete Provisions

Section 1.14 of appendix D1 and section 1.15 of appendix D2 provided a definition for ''moisture sensing control;''[50] similarly, section 1.18 of

[49] EERE–2020–BT–STD–0001–0048, at *www.regulations.gov.*

[50] ''Moisture sensing control'' is defined as a system which utilizes a moisture sensing element

Continued

appendix D1 and section 1.19 of appendix D2 provided a definition for ''temperature sensing control.'' [51] Both of these definitions were obsolete, having been incorporated into a broader term ''automatic termination control'' [52] in section 1.4 of both appendices as part of the January 2011 Final Rule. 76 FR 972, 978 (Jan. 6, 2011). In addition, the terms ''moisture sensing control'' and ''temperature sensing control'' were not referenced anywhere else within appendix D1 or appendix D2. DOE is removing these definitions from both appendices and renumbering the subsequent sections of the test procedure accordingly.

Section 3.5 of appendix D2 described the application of a field use factor for clothes dryers with automatic termination controls. In the August 2013 Final Rule, DOE eliminated the field use factor in appendix D2 for automatic termination control clothes dryers, in conjunction with new procedures that directly measure any over-drying energy consumption of automatic termination control clothes dryers. 78 FR 49608, 49611 (Aug. 14, 2013). In the August 2013 Final Rule, DOE erroneously retained the obsolete section 3.5 of appendix D2. DOE therefore is removing section 3.5 of appendix D2 and adjusting the numbering of subsequent sections accordingly.

Section 4.7 of both appendix D1 and appendix D2 provided the equation for calculating EF. DOE's energy conservation standards for clothes dryers were based on energy factor (''EF'') for clothes dryers manufactured on or after May 14, 1994 and before January 1, 2015. However, as of January 1, 2015, clothes dryer energy conservation standards are based on the CEF metric. Similarly, DOE's certification reporting requirements for clothes dryers at 10 CFR 429.21(b)(2) required reporting CEF when using appendix D1 or appendix D2; EF was required only when using appendix D, which is obsolete and is removed in this final rule. Furthermore, ENERGY STAR qualification is based on the CEF metric. DOE is not aware of any current regulatory programs or criteria that use the EF metric. Therefore, DOE is removing the obsolete calculation of EF in section 4.7 of both appendix D1 and appendix D2, renumbering the subsequent sections of the test procedures accordingly, and removing EF as a measure of energy consumption described at 10 CFR 430.23(d)(2).

*F. Removing Obsolete Appendix D*

In the July 2019 NOPR, DOE proposed to remove appendix D from 10 CFR part 430, since this version of the test procedure is no longer used. DOE also proposed to remove the references to appendix D from 10 CFR 430.23(d), as well as in the clothes dryer certification reporting requirements in 10 CFR 429.21(b)(2).

AHAM stated that it did not oppose DOE's proposal to remove appendix D, because this appendix is no longer mandatory. (AHAM, No. 33 at p. 11) No other comments were received on the removal of appendix D.

Given that appendix D is no longer in use, DOE is removing appendix D and all associated references throughout 10 CFR 429.21 and 10 CFR 430.23(d).

*G. Test Procedure Costs and Impact*

EPCA requires that test procedures adopted by DOE not be unduly burdensome to conduct. In this document, DOE amends the existing test procedure for residential clothes dryers. DOE has determined that the test procedure as amended by this final rule will not be unduly burdensome for manufacturers to conduct.

In this final rule, DOE adopts a number of amendments to both appendix D1 and appendix D2. The current energy conservation standards for clothes dryers were developed based on results obtained using appendix D1. As discussed in the following sections, neither the amendments to appendix D1 or appendix D2 will impact the current costs of the test procedures.

None of the amendments to appendix D1 or appendix D2 will impact the scope of the test procedure (*i.e.,* the amendments will not require manufacturers to test clothes dryers that are not already required to be tested). Additionally, DOE has determined that none of the amendments will require manufacturers to re-test or re-certify any existing models on the market that have been tested and certified using appendix D1 or appendix D2.

Based on the discussion that follows, DOE has determined that these amendments to the clothes dryer test procedure in appendix D1 and appendix D2 will not be unduly burdensome for manufacturers to conduct.

1. Maintaining Hourly Btu Rating for Gas Clothes Dryers

DOE specifies the order of adjustment, from least burdensome to most burdensome, for the three types of adjustments that can be made to maintain the required heat input rate for natural gas and propane clothes dryers. As described, this amendment is generally consistent with industry practice. To the extent that any deviations from this order may occur in practice, the additional direction provided by these amendments will not require any manufacturers to retest or re-certify any basic models currently on the market because the net result of maintaining the hourly Btu rating within ±5 percent of the rated value will not change. Therefore, drying performance will not be impacted in comparison to results obtained under the previous test procedures.

2. Final Moisture Content Requirement

DOE explicitly specifies that any second test run using the highest dryness level setting must result in an FMC of 2 percent or less for the test to be considered valid. This amendment impacts only appendix D2, and therefore has no impact on testing under appendix D1. As described, this amendment reflects the current practice of manufacturers and test laboratories, and therefore does not impact the cost of testing.

3. Additional Amendments

DOE has determined that the remainder of the amendments adopted in this final rule will not impact test costs.

DOE provides direction regarding the required settings for network capabilities during testing under both appendix D1 and appendix D2. This direction will not impact test costs as it provides further direction to the prior test procedure and does not require conducting an additional test. The amendment will not change the measured energy use of basic models for which the consumer is required to turn on the network capability, as the prior test procedure provided no direction to do so. To the extent that there are basic models with the network capability enabled in the as shipped condition, the energy use attributable to the network function would have been captured under the prior test procedure. For any such basic models, the direction regarding the network capabilities adopted in this document will result in lower measured energy use as compared

within the dryer drum that monitors the amount of moisture in the clothes and automatically terminates the dryer cycle.

[51] ''Temperature sensing control'' is defined as a system which monitors dryer exhaust air temperature and automatically terminates the dryer cycle.

[52] ''Automatic termination control'' is defined as a dryer control system with a sensor which monitors either the dryer load temperature or its moisture content and with a controller which automatically terminates the drying process. A mark, detent, or other visual indicator or detent which indicates a preferred automatic termination control setting must be present if the dryer is to be classified as having an ''automatic termination control.'' A mark is a visible single control setting on one or more dryer controls.

to the prior test procedure. Therefore, the amendment regarding network capabilities adopted in this final rule will not result in a basic model that is complaint under the prior test procedure becoming non-compliant.

DOE provides additional direction on the dryness level setting for clothes dryers that provide an even number of discrete dryness settings. This amendment impacts only appendix D2, and therefore has no impact on testing under appendix D1. This amendment will not impact testing costs, as it provides direction for the required setting for the previously required test, without requiring any additional testing.

DOE is updating the representative annual number of drying cycles in the per-cycle standby mode and off mode energy consumption calculations in appendix D2 to use the most recently available data. The updated number of drying cycles will not be required for use unless and until such time the energy conservation standards are amended taking into account the updated value. As such, this amendment will not require retesting or recertification.

DOE provides revisions regarding the measurement and accounting of standby mode and off mode power in both appendix D1 and appendix D2. DOE has determined that these revisions potentially reduce testing costs for third-party laboratories, as the amendment does not require any disassembly of a clothes dryer to determine the appropriate application of the test procedure. However, DOE has not quantified the potential reduction in testing cost.

DOE provides a variety of formatting and typographical corrections to both appendix D1 and appendix D2. These edits remove confusion that may result from the errors and improve the readability of the test procedures.

DOE amends 10 CFR 430.23(d) to include instructions for calculating estimated annual operating cost, CEF, and other useful metrics using appendix D2. The prior test procedure provision provided for the calculation of these values using measurements from appendix D1. The test procedure as finalized in this document also explicitly provides for calculating these values using measurements from appendix D2. This amendment provides additional direction regarding the calculation of metrics and no additional testing will be required.

DOE is revising the required weighing scale resolution for weighing test cloths to limit test variation consistent with current test laboratory capabilities. In DOE's experience, testing facilities are currently using instrumentation that meet these new instrumentation requirements, and therefore DOE concludes that these revisions will not impact test burden.

Manufacturers will be able to rely on data generated under the previous test procedure, and no retesting or recertification will be required as a result of this test procedure.

*H. Harmonization With Industry Standards*

The test procedures for clothes dryers in appendix D1 and appendix D2 incorporate by reference AHAM HLD–1–2009, ''Household Tumble Type Clothes Dryers,'' (which was later certified as ANSI/AHAM HLD–1–2010) and IEC Standard 62301. Specifically, both appendices reference an exhaust simulator specified in AHAM HLD–1–2009 in their test setup instructions, and incorporate IEC Standard 62301, which provides test conditions, testing equipment, and methods for measuring standby mode and off mode power consumption. Appendix D1 and appendix D2 also require the use of AHAM Standard Test Detergent Formula 3 for preconditioning the test cloths. DOE has determined that the revisions to the standby and off mode power provisions do not impact the existing references to industry standards and do not alter the applicability of those referenced industry standards to the DOE test procedure.

The California IOUs suggested that DOE review comments they submitted in response to the NOPR published on February 13, 2019, proposing amendments to DOE's rulemaking process (84 FR 3910); specifically, their recommendation that DOE use industry-based test procedures as guidance documents and that all industry test procedures should be evaluated consistent with EPCA. (California IOUs, No. 29 at p. 21) AHAM supported the practice of adopting voluntary consensus-based test procedures without modification, specifically the incorporation by reference of the latest version of AHAM HLD–1, though AHAM did not support incorporation by reference of IEC Standard 61121. AHAM commented that, while there may be times when it is appropriate to incorporate European standards by reference, in this case the European procedure does not produce results that are directly comparable to the DOE test procedure results. (AHAM, No. 33 at p. 13)

In conducting this test procedure rulemaking, DOE reviewed relevant industry standards, including AHAM HLD–1 and IEC Standard 61121. The DOE test procedure continues to reference AHAM HLD–1. Because adoption of AHAM HLD–1 in its entirety would impact the measured energy use of clothes dryers for purposes of determining compliance with DOE standards, DOE did not amend appendix D1 or appendix D2 to adopt AHAM HLD–1 in its entirety in this rulemaking. Consistent with its 2020 amendments to the Process Rule at 10 CFR part 430, subpart C, Appendix A, DOE will, however, consider adoption of AHAM HLD–1 in its entirety in a subsequent rulemaking prior to any rulemaking to consider whether to amend the energy conservation standards applicable to clothes dryers.

As noted, the 2009 version of AHAM HLD–1 has been certified as ANSI/AHAM HLD–1–2010. ANSI certification ensures that the standard has been developed through a process that meets ANSI's requirements for openness, balance, consensus, and other due process safeguards.[53] The certification of AHAM HLD–1 as ANSI/AHAM HLD–1–2010 does not result in any substantive changes to the industry standard. In this final rule, DOE is updating the reference to AHAM HLD–1 in appendix D1 and appendix D2 to the 2010 version of ANSI/AHAM HLD–1. This update to the most recent version of AHAM HLD–1 does not result in any changes to the clothes dryer test procedures at appendix D1 and appendix D2.

*I. Effective and Compliance Dates*

The effective date for the adopted test procedure amendments will be 30 days after publication of this final rule in the **Federal Register**. EPCA prescribes that all representations of energy efficiency and energy use, including those made on marketing materials and product labels, must be made in accordance with an amended test procedure, beginning 180 days after publication of the final rule in the **Federal Register**. (42 U.S.C. 6293(c)(2)) EPCA allows individual manufacturers to petition DOE for an extension of the 180-day period if the manufacturer may experience undue hardship in meeting the deadline. (42 U.S.C. 6293(c)(3)) To receive such an extension, petitions must be filed with DOE no later than 60 days before the end of the 180-day period and must detail how the manufacturer will experience undue hardship. *Id.* To the extent the modified test procedure adopted in this final rule is required

[53] More information on ANSI's standards process may be found at: *www.ansi.org/standards_activities/overview/overview?menuid=3.*

only for the evaluation and issuance of updated efficiency standards, compliance with the amended test procedure does not require use of such modified test procedure provisions until the implementation date of updated standards.

In addition, DOE amends the introductory note in both appendix D1 and appendix D2 to remove reference to the optional early use of the test procedures before the compliance date of the current clothes dryer energy conservation standards, which was January 1, 2015.

## IV. Procedural Issues and Regulatory Review

### *A. Review Under Executive Order 12866*

The Office of Management and Budget (''OMB'') has determined that this test procedure rulemaking is not a ''significant regulatory action'' under section 3(f) of Executive Order (''E.O.'') 12866, Regulatory Planning and Review, 58 FR 51735 (Oct. 4, 1993). Accordingly, this action was not subject to review under the E.O. by the Office of Information and Regulatory Affairs (''OIRA'') in OMB.

### *B. Review Under the Regulatory Flexibility Act*

The Regulatory Flexibility Act (5 U.S.C. 601 *et seq.*) requires preparation of a final regulatory flexibility analysis (''FRFA'') for any final rule where the agency was first required by law to publish a proposed rule for public comment, unless the agency certifies that the rule, if promulgated, will not have a significant economic impact on a substantial number of small entities. As required by E.O. 13272, ''Proper Consideration of Small Entities in Agency Rulemaking,'' 67 FR 53461 (August 16, 2002), DOE published procedures and policies on February 19, 2003 to ensure that the potential impacts of its rules on small entities are properly considered during the DOE rulemaking process. 68 FR 7990. DOE has made its procedures and policies available on the Office of the General Counsel's website: *https://energy.gov/gc/office-general-counsel.*

DOE reviewed this final rule under the provisions of the Regulatory Flexibility Act and the procedures and policies published on February 19, 2003. DOE has concluded that this final rule will not have a significant impact on a substantial number of small entities. The factual basis for this determination is as follows:

The Small Business Administration (''SBA'') considers a business entity to be a small business, if, together with its affiliates, it employs less than a threshold number of workers or earns less than the average annual receipts specified in 13 CFR part 121. The threshold values set forth in these regulations use size standards and codes established by the North American Industry Classification System (''NAICS'') that are available at: *www.sba.gov/document/support--table-size-standards.* The threshold number for NAICS classification code 335220, major household appliance manufacturing, which includes clothes dryer manufacturers, is 1,500 employees.

Most of the manufacturers supplying clothes dryers are large multinational corporations. DOE collected data from DOE's compliance certification database [54] and surveyed the AHAM member directory to identify manufacturers of clothes dryers. DOE then consulted publicly-available data, purchased company reports from vendors such as Dun and Bradstreet, and contacted manufacturers, where needed, to determine if they meet the SBA's definition of a ''small business manufacturing facility'' and have their manufacturing facilities located within the United States. Based on this analysis, DOE did not identify any small businesses that manufacture clothes dryers covered by the proposed test procedure amendments.

Additionally, as described in section III.G of this document, the amendments proposed in this test procedure will not increase costs to clothes dryer manufacturers. Therefore, DOE concludes that the cost effects accruing from the final rule will not have a ''significant economic impact on a substantial number of small entities,'' and that the preparation of a FRFA is not warranted. DOE has submitted a certification and supporting statement of factual basis to the Chief Counsel for Advocacy of the Small Business Administration for review under 5 U.S.C. 605(b).

### *C. Review Under the Paperwork Reduction Act of 1995*

Manufacturers of clothes dryers must certify to DOE that their products comply with any applicable energy conservation standards. To certify compliance, manufacturers must first obtain test data for their products according to the DOE test procedures, including any amendments adopted for those test procedures. DOE has established regulations for the certification and recordkeeping requirements for all covered consumer products and commercial equipment, including clothes dryers. (See generally 10 CFR part 429) The collection-of-information requirement for the certification and recordkeeping is subject to review and approval by OMB under the Paperwork Reduction Act (''PRA''). This requirement has been approved by OMB under OMB control number 1910–1400. Public reporting burden for the certification is estimated to average 35 hours per response, including the time for reviewing instructions, searching existing data sources, gathering and maintaining the data needed, and completing and reviewing the collection of information.

Notwithstanding any other provision of the law, no person is required to respond to, nor shall any person be subject to a penalty for failure to comply with, a collection of information subject to the requirements of the PRA, unless that collection of information displays a currently valid OMB Control Number.

### *D. Review Under the National Environmental Policy Act of 1969*

In this final rule, DOE establishes test procedure amendments that it expects will be used to develop and implement future energy conservation standards for clothes dryers. DOE has determined that this rule falls into a class of actions that are categorically excluded from review under the National Environmental Policy Act of 1969 (42 U.S.C. 4321 *et seq.*) and DOE's implementing regulations at 10 CFR part 1021. Specifically, DOE has determined that adopting test procedures for measuring energy efficiency of consumer products and industrial equipment is consistent with activities identified in 10 CFR part 1021, appendix A to subpart D, A5 and A6. Accordingly, neither an environmental assessment nor an environmental impact statement is required.

### *E. Review Under Executive Order 13132*

E.O. 13132, ''Federalism,'' 64 FR 43255 (August 4, 1999), imposes certain requirements on agencies formulating and implementing policies or regulations that preempt State law or that have federalism implications. The E.O. requires agencies to examine the constitutional and statutory authority supporting any action that would limit the policymaking discretion of the States and to carefully assess the necessity for such actions. The E.O. also requires agencies to have an accountable process to ensure meaningful and timely input by State and local officials in the development of regulatory policies that have federalism implications. On March

[54] *www.regulations.doe.gov/certification-data* (Last accessed February 2, 2019).

14, 2000, DOE published a statement of policy describing the intergovernmental consultation process it will follow in the development of such regulations. 65 FR 13735. DOE examined this final rule and determined that it will not have a substantial direct effect on the States, on the relationship between the National Government and the States, or on the distribution of power and responsibilities among the various levels of government. EPCA governs and prescribes Federal preemption of State regulations as to energy conservation for the products that are the subject of this final rule. States can petition DOE for exemption from such preemption to the extent, and based on criteria, set forth in EPCA. (42 U.S.C. 6297(d)) No further action is required by E.O. 13132.

*F. Review Under Executive Order 12988*

Regarding the review of existing regulations and the promulgation of new regulations, section 3(a) of E.O. 12988, ''Civil Justice Reform,'' 61 FR 4729 (Feb. 7, 1996), imposes on Federal agencies the general duty to adhere to the following requirements: (1) Eliminate drafting errors and ambiguity; (2) write regulations to minimize litigation; (3) provide a clear legal standard for affected conduct rather than a general standard; and (4) promote simplification and burden reduction. Section 3(b) of E.O. 12988 specifically requires that executive agencies make every reasonable effort to ensure that the regulation (1) clearly specifies the preemptive effect, if any; (2) clearly specifies any effect on existing Federal law or regulation; (3) provides a clear legal standard for affected conduct while promoting simplification and burden reduction; (4) specifies the retroactive effect, if any; (5) adequately defines key terms; and (6) addresses other important issues affecting clarity and general draftsmanship under any guidelines issued by the Attorney General. Section 3(c) of E.O. 12988 requires executive agencies to review regulations in light of applicable standards in sections 3(a) and 3(b) to determine whether they are met or it is unreasonable to meet one or more of them. DOE has completed the required review and determined that, to the extent permitted by law, this final rule meets the relevant standards of E.O. 12988.

*G. Review Under the Unfunded Mandates Reform Act of 1995*

Title II of the Unfunded Mandates Reform Act of 1995 (''UMRA'') requires each Federal agency to assess the effects of Federal regulatory actions on State, local, and Tribal governments and the private sector. Public Law 104–4, sec. 201 (codified at 2 U.S.C. 1531). For a regulatory action resulting in a rule that may cause the expenditure by State, local, and Tribal governments, in the aggregate, or by the private sector of $100 million or more in any one year (adjusted annually for inflation), section 202 of UMRA requires a Federal agency to publish a written statement that estimates the resulting costs, benefits, and other effects on the national economy. (2 U.S.C. 1532(a), (b)) The UMRA also requires a Federal agency to develop an effective process to permit timely input by elected officers of State, local, and Tribal governments on a proposed ''significant intergovernmental mandate,'' and requires an agency plan for giving notice and opportunity for timely input to potentially affected small governments before establishing any requirements that might significantly or uniquely affect small governments. On March 18, 1997, DOE published a statement of policy on its process for intergovernmental consultation under UMRA. 62 FR 12820; also available at *https://energy.gov/gc/office-general-counsel.* DOE examined this final rule according to UMRA and its statement of policy and determined that the rule contains neither an intergovernmental mandate, nor a mandate that may result in the expenditure of $100 million or more in any year, so these requirements do not apply.

*H. Review Under the Treasury and General Government Appropriations Act, 1999*

Section 654 of the Treasury and General Government Appropriations Act, 1999 (Pub. L. 105–277) requires Federal agencies to issue a Family Policymaking Assessment for any rule that may affect family well-being. This final rule will not have any impact on the autonomy or integrity of the family as an institution. Accordingly, DOE has concluded that it is not necessary to prepare a Family Policymaking Assessment.

*I. Review Under Executive Order 12630*

DOE has determined, under E.O. 12630, ''Governmental Actions and Interference with Constitutionally Protected Property Rights'' 53 FR 8859 (March 18, 1988), that this regulation will not result in any takings that might require compensation under the Fifth Amendment to the U.S. Constitution.

*J. Review Under Treasury and General Government Appropriations Act, 2001*

Section 515 of the Treasury and General Government Appropriations Act, 2001 (44 U.S.C. 3516 note) provides for agencies to review most disseminations of information to the public under guidelines established by each agency pursuant to general guidelines issued by OMB. OMB's guidelines were published at 67 FR 8452 (Feb. 22, 2002), and DOE's guidelines were published at 67 FR 62446 (Oct. 7, 2002). Pursuant to OMB Memorandum M–19–15, Improving Implementation of the Information Quality Act (April 24, 2019), DOE published updated guidelines which are available at *www.energy.gov/sites/prod/files/2019/12/f70/DOE%20Final%20Updated%20IQA%20Guidelines%20Dec%202019.pdf.* DOE has reviewed this final rule under the OMB and DOE guidelines and has concluded that it is consistent with applicable policies in those guidelines.

*K. Review Under Executive Order 13211*

E.O. 13211, ''Actions Concerning Regulations That Significantly Affect Energy Supply, Distribution, or Use,'' 66 FR 28355 (May 22, 2001), requires Federal agencies to prepare and submit to OMB, a Statement of Energy Effects for any significant energy action. A ''significant energy action'' is defined as any action by an agency that promulgated or is expected to lead to promulgation of a final rule, and that (1) is a significant regulatory action under E.O. 12866, or any successor order; and (2) is likely to have a significant adverse effect on the supply, distribution, or use of energy; or (3) is designated by the Administrator of OIRA as a significant energy action. For any significant energy action, the agency must give a detailed statement of any adverse effects on energy supply, distribution, or use if the regulation is implemented, and of reasonable alternatives to the action and their expected benefits on energy supply, distribution, and use.

This regulatory action is not a significant regulatory action under E.O. 12866. Moreover, it will not have a significant adverse effect on the supply, distribution, or use of energy, nor has it been designated as a significant energy action by the Administrator of OIRA. Therefore, it is not a significant energy action, and, accordingly, DOE has not prepared a Statement of Energy Effects.

*L. Review Under Section 32 of the Federal Energy Administration Act of 1974*

Under section 301 of the Department of Energy Organization Act (Pub. L. 95–91; 42 U.S.C. 7101), DOE must comply with section 32 of the Federal Energy Administration Act of 1974, as amended by the Federal Energy Administration

Authorization Act of 1977. (15 U.S.C. 788; ''FEAA'') Section 32 essentially provides in relevant part that, where a proposed rule authorizes or requires use of commercial standards, the notice of proposed rulemaking must inform the public of the use and background of such standards. In addition, section 32(c) requires DOE to consult with the Attorney General and the Chairman of the FTC concerning the impact of the commercial or industry standards on competition.

The modifications to the test procedure for clothes dryers adopted in this final rule incorporates testing methods contained in the following commercial standards: AHAM HLD–1–2010, IEC 62301 (Edition 2.0, 2011–01). DOE has evaluated these standard and is unable to conclude whether it fully complies with the requirements of section 32(b) of the FEAA (*i.e.,* whether it was developed in a manner that fully provides for public participation, comment, and review.) DOE has consulted with both the Attorney General and the Chairman of the FTC about the impact on competition of using the methods contained in these standards and has received no comments objecting to their use.

*M. Congressional Notification*

As required by 5 U.S.C. 801, DOE will report to Congress on the promulgation of this rule before its effective date. The report will state that it has been determined that the rule is not a ''major rule'' as defined by 5 U.S.C. 804(2).

*N. Description of Materials Incorporated by Reference*

In this final rule, DOE incorporates by reference the industry standard published by AHAM, titled ''ANSI/AHAM HLD–1–2010 (''AHAM HLD–1–2010''), Household Tumble Type Clothes Dryers, approved 2010'' which provides methods for testing and evaluating performance (*i.e.,* moisture removal energy efficiency, drying time, and clothing load temperatures) of home laundry clothes drying equipment. Copies of ANSI/AHAM HLD–1–2010 can be obtained from the Association of Home Appliance Manufacturers at 1111 19th Street NW, Suite 402, Washington, DC 20036, 202–872–5955, or go to *www.aham.org.* Specifically, the test procedure codified by this final rule references section 3.3.5.1 ''Standard Simulator'' of AHAM HLD–1–2010, which provides specifications for an exhaust simulator.

In this final rule DOE maintains the incorporation by reference to a test procedure published by IEC, titled IEC 62301, ''Household electrical appliances-Measurement of standby power'', (Edition 2.0, 2011–01) (''IEC 62301''). Copies of IEC 62301 can be obtained from the International Electrotechnical Commission webstore, by going to *https://webstore.iec.ch.* Specifically, the test procedure codified by this final rule references Section 5, Paragraph 5.1 ''General,'' Note 1 and Section 5, Paragraph 5.3.2 ''Sampling Method'' of IEC 62301, which provides test conditions, testing equipment, and methods for measuring standby mode and off mode power consumption.

## V. Approval of the Office of the Secretary

The Secretary of Energy has approved publication of this final rule.

## List of Subjects

*10 CFR Part 429*

Administrative practice and procedure, Confidential business information, Energy conservation, Household appliances, Reporting and recordkeeping requirements.

*10 CFR Part 430*

Administrative practice and procedure, Confidential business information, Energy conservation, Household appliances, Imports, Incorporation by reference, Intergovernmental relations, Small businesses.

## Signing Authority

This document of the Department of Energy was signed on October 1, 2021, by Kelly Speakes-Backman, Principal Deputy Assistant Secretary and Acting Assistant Secretary for Energy Efficiency and Renewable Energy, pursuant to delegated authority from the Secretary of Energy. That document with the original signature and date is maintained by DOE. For administrative purposes only, and in compliance with requirements of the Office of the Federal Register, the undersigned DOE Federal Register Liaison Officer has been authorized to sign and submit the document in electronic format for publication, as an official document of the Department of Energy. This administrative process in no way alters the legal effect of this document upon publication in the **Federal Register**.

Signed in Washington, DC, on October 1, 2021.

**Treena V. Garrett,**

*Federal Register Liaison Officer, U.S. Department of Energy.*

For the reasons stated in the preamble, DOE amends parts 429 and 430 of chapter II of title 10, Code of Federal Regulations as set forth below:

## PART 429—CERTIFICATION, COMPLIANCE, AND ENFORCEMENT FOR CONSUMER PRODUCTS AND COMMERCIAL AND INDUSTRIAL EQUIPMENT

■ 1. The authority citation for part 429 continues to read as follows:

**Authority:** 42 U.S.C. 6291–6317; 28 U.S.C. 2461 note.

■ 2. Section 429.21 is amended by revising paragraph (b)(2) and adding paragraph (c) to read as follows:

### § 429.21 Residential clothes dryers.

* * * * *

(b) * * *

(2) Pursuant to § 429.12(b)(13), a certification report shall include the following public product-specific information: When using appendix D1 to subpart B of part 430 of this chapter, the combined energy factor in pounds per kilowatt hours (lb/kWh), the capacity in cubic feet (cu ft), the voltage in volts (V) (for electric dryers only), an indication if the dryer has automatic termination controls, and the hourly Btu rating of the burner (for gas dryers only); when using appendix D2 to subpart B of part 430, the combined energy factor in pounds per kilowatt hours (lb/kWh), the capacity in cubic feet (cu ft), the voltage in volts (V) (for electric dryers only), an indication if the dryer has automatic termination controls, the hourly Btu rating of the burner (for gas dryers only), and a list of the cycle setting selections for the energy test cycle as recorded in section 3.4.7 of appendix D2 to subpart B of part 430.

(c) *Reported values.* Values reported pursuant to this section must be rounded as follows: CEF to the nearest 0.01 lb/kWh, capacity to the nearest 0.1 cu ft, voltage to the nearest V, and hourly Btu rating to the nearest Btu.

## PART 430—ENERGY CONSERVATION PROGRAM FOR CONSUMER PRODUCTS

■ 3. The authority citation for part 430 continues read as follows:

**Authority:** 42 U.S.C. 6291–6309; 28 U.S.C. 2461 note.

■ 4. Section 430.3 is amended by revising paragraph (i)(3) to read as follows:

### § 430.3 Materials incorporated by reference.

* * * * *

(i) * * *

(3) ANSI/AHAM HLD–1–2010 (''AHAM HLD–1''), Household Tumble Type Clothes Dryers, ANSI-approved June 11, 2010, IBR approved for

appendices D1 and D2 to subpart B of this part.

* * * * *

■ 5. Section 430.23 is amended by revising paragraph (d) to read as follows:

**§ 430.23 Test procedures for the measurement of energy and water consumption.**

* * * * *

(d) *Clothes dryers.* (1) The estimated annual energy consumption for clothes dryers, expressed in kilowatt-hours per year, shall be the product of the annual representative average number of clothes dryer cycles as specified in appendix D1 or D2 to this subpart, as appropriate, and the per-cycle combined total energy consumption in kilowatt-hours per cycle, determined according to section 4.6 of appendix D1 or section 4.6 of appendix D2 to this subpart, as appropriate.

(2) The estimated annual operating cost for clothes dryers shall be—

(i) For an electric clothes dryer, the product of the following three factors, with the resulting product then being rounded off to the nearest dollar per year:

(A) The annual representative average number of clothes dryer cycles as specified in appendix D1 or appendix D2 to this subpart, as appropriate;

(B) The per-cycle combined total energy consumption in kilowatt-hours per cycle, determined according to section 4.6 of appendix D1 or section 4.6 of appendix D2 to this subpart, as appropriate; and

(C) The representative average unit cost of electrical energy in dollars per kilowatt-hour as provided by the Secretary; and

(ii) For a gas clothes dryer, the product of the annual representative average number of clothes dryer cycles as specified in appendix D1 or D2 to this subpart, as appropriate, times the sum of the following three factors, with the resulting product then being rounded off to the nearest dollar per year:

(A) The product of the per-cycle gas dryer electric energy consumption in kilowatt-hours per cycle, determined according to section 4.2 of appendix D1 or section 4.2 of appendix D2 to this subpart, as appropriate, times the representative average unit cost of electrical energy in dollars per kilowatt-hour as provided by the Secretary; plus,

(B) The product of the per-cycle gas dryer gas energy consumption, in Btus per cycle, determined according to section 4.3 of appendix D1 or section 4.3 of appendix D2 to this subpart, as appropriate, times the representative average unit cost for natural gas or propane, as appropriate, in dollars per Btu as provided by the Secretary; plus,

(C) The product of the per-cycle standby mode and off mode energy consumption in kilowatt-hours per cycle, determined according to section 4.5 of appendix D1 or section 4.5 of appendix D2 to this subpart, as appropriate, times the representative average unit cost of electrical energy in dollars per kilowatt-hour as provided by the Secretary.

(3) The combined energy factor, expressed in pounds per kilowatt-hour is determined in accordance with section 4.7 of appendix D1 or section 4.7 of appendix D2 to this subpart, as appropriate, the result then being rounded off to the nearest hundredth (0.01).

(4) Other useful measures of energy consumption for clothes dryers shall be those measures of energy consumption for clothes dryers which the Secretary determines are likely to assist consumers in making purchasing decisions and which are derived from the application of appendix D1 or D2 to this subpart, as appropriate.

* * * * *

## Appendix D to Subpart B of Part 430—[Removed]

■ 6. Appendix D to subpart B of part 430 is removed.

■ 7. Appendix D1 to subpart B of part 430 is amended by:

■ a. Revising the introductory note;

■ b. Adding section 0;

■ c. Revising section 1.3;

■ d. Removing the word ''clothes'', in section 1.5, and adding in its place ''cloths'';

■ e. Removing sections 1.7 and 1.14;

■ f. Redesignating sections 1.8 through 1.11 as sections 1.7 through 1.10, respectively, and section 1.13 as section 1.14;

■ g. Adding new sections 1.11 and 1.13;

■ h. Revising section 1.18;

■ i. Revising the first sentence of section 2.1.1 and revising section 2.1.2;

■ j. Revising the first sentence of section 2.1.3;

■ k. Revising sections 2.2.1, 2.3.2.1, and 2.3.2.2;

■ l. Adding section 2.3.2.3;

■ m. Redesignating section 2.4.1 as section 2.4.1.1;

■ n. Adding new section 2.4.1;

■ o. Revising newly redesignated 2.4.1.1;

■ p. Removing the word ''Clothes'', in section 2.6, and adding in its place ''Cloths'';

■ q. Revising sections 2.7.1, 2.7.2, and 2.8.1;

■ r. In section 3.1, in the last sentence of the introductory text, adding the text ''to the nearest 0.1 cubic foot'' following the text ''is calculated'';

■ s. Revising sections 3.3, 3.4.1, 3.4.2, 3.4.3, 3.6, 3.6.1, and 3.6.2;

■ t. Adding sections 3.6.3 and 3.6.4;

■ u. Revising sections 4.1, 4.2, 4.3, and 4.5;

■ v. Removing section 4.7; and

■ w. Redesignating section 4.8 as section 4.7.

The revisions and additions read as follows:

## Appendix D1 to Subpart B of Part 430—Uniform Test Method for Measuring the Energy Consumption of Clothes Dryers

*Note:* The procedures in either this appendix or appendix D2 to this subpart must be used to determine compliance with energy conservation standards for clothes dryers manufactured on or after January 1, 2015. Manufacturers must use a single appendix for all representations, including certifications of compliance, and may not use this appendix for certain representations and appendix D2 to this subpart for other representations.

**0. Incorporation by Reference**

DOE incorporated by reference in § 430.3 the standards for AHAM HLD–1 and IEC 62301, in their entirety, however, only enumerated provisions of those documents are applicable to this appendix. In cases where there is a conflict between any industry standard(s) and this appendix, the language of the test procedure in this appendix takes precedence over the industry standard(s).

(1) AHAM HLD–1:

(i) Section 3.3.5.1 ''Standard Simulator'' as referenced in sections 2.1.2 through 2.1.3 of this appendix.

(ii) [Reserved]

(2) IEC 62301:

(i) Section 5, Paragraph 5.1, Note 1 as referenced in section 3.6.2 of this appendix.

(ii) Section 5, Paragraph 5.3.2 ''Sampling Method'' as referenced in section 3.6.3 of this appendix.

**1. * * ***

1.3 ''AHAM HLD–1'' means the test standard published by the Association of Home Appliance Manufacturers, titled ''Household Tumble Type Clothes Dryers,'' ANSI-approved June 11, 2010, ANSI/AHAM HLD–1–2010.

* * * * *

1.11 ''Final moisture content'' (''FMC'') means the ratio of the weight of water contained by the dry test load (*i.e.,* after completion of the drying cycle) to the bone-dry weight of the test load, expressed as a percent.

* * * * *

1.13 ''Initial moisture content'' (''IMC'') means the ratio of the weight of water contained by the damp test load (*i.e.,* prior to completion of the drying cycle) to the

bone-dry weight of the test load, expressed as a percent.

* * * * *

1.18 ''Vented clothes dryer'' means a clothes dryer that exhausts the evaporated moisture from the cabinet.

* * * * *

**2. * * ***

2.1.1 * * * For both vented clothes dryers and ventless clothes dryers, install the clothes dryer in accordance with manufacturer's instructions as shipped with the unit. * * *

2.1.2 *Vented clothes dryers.* For vented clothes dryers, the dryer exhaust shall be restricted by adding the AHAM exhaust simulator described in section 3.3.5.1 of AHAM HLD–1.

2.1.3 * * * For ventless clothes dryers, the dryer shall be tested without the AHAM exhaust simulator. * * *

* * * * *

2.2.1 For drying testing, maintain the room ambient air temperature at 75 ±3 °F and the room relative humidity at 50 percent ±10 percent relative humidity.

* * * * *

2.3.2.1 *Natural gas supply.* Maintain the gas supply to the clothes dryer immediately ahead of all controls at a pressure of 7 to 10 inches of water column. The natural gas supplied should have a heating value of approximately 1,025 Btus per standard cubic foot. The actual heating value, $H_n2$, in Btus per standard cubic foot, for the natural gas to be used in the test shall be obtained either from measurements using a standard continuous flow calorimeter as described in section 2.4.6 of this appendix or by the purchase of bottled natural gas whose Btu rating is certified to be at least as accurate a rating as could be obtained from measurements with a standard continuous flow calorimeter as described in section 2.4.6 of this appendix.

2.3.2.2 *Propane gas supply.* Maintain the gas supply to the clothes dryer immediately ahead of all controls at a pressure of 11 to 13 inches of water column. The propane gas supplied should have a heating value of approximately 2,500 Btus per standard cubic foot. The actual heating value, $H_p$, in Btus per standard cubic foot, for the propane gas to be used in the test shall be obtained either from measurements using a standard continuous flow calorimeter as described in section 2.4.6 of this appendix or by the purchase of bottled gas whose Btu rating is certified to be at least as accurate a rating as could be obtained from measurement with a standard continuous calorimeter as described in section 2.4.6 of this appendix.

2.3.2.3 *Hourly Btu Rating.* Maintain the hourly Btu rating of the burner within ±5 percent of the rating specified by the manufacturer. If the hourly Btu rating of the burner cannot be maintained within ±5 percent of the rating specified by the manufacturer, make adjustments in the following order until an hourly Btu rating of the burner within ±5 percent of the rating specified by the manufacturer is achieved:

(1) Modify the gas inlet supply pressure within the allowable range specified in section 2.3.2.1 or 2.3.2.2 of this appendix, as applicable;

(2) If the clothes dryer is equipped with a gas pressure regulator, modify the outlet pressure of the gas pressure regulator within ±10 percent of the value recommended by the manufacturer in the installation manual, on the nameplate sticker, or wherever the manufacturer makes such a recommendation for the basic model; and

(3) Modify the orifice as necessary to achieve the required hourly Btu rating.

* * * * *

2.4.1 *Weighing scales.*

2.4.1.1 *Weighing scale for test cloth.* The scale shall have a range of 0 to a maximum of 60 pounds with a resolution of at least 0.001 pounds and a maximum error no greater than 0.1 percent of any measured value within the range of 3 to 15 pounds.

* * * * *

2.7.1 *Load size.* Determine the load size for the unit under test, according to Table 1 of this section.

TABLE 1—TEST LOADS

| Unit under test | Test load (bone dry weight) |
|---|---|
| Standard size clothes dryer. | 8.45 pounds ± .085 pounds. |
| Compact size clothes dryer. | 3.00 pounds ± .03 pounds. |

Each test load must consist of energy test cloths and no more than five energy stuffer cloths.

2.7.2 *Test load preparation.* Dampen the load by agitating it in water whose temperature is 60 °F ± 5 °F and consists of 0 to 17 parts per million hardness for approximately 2 minutes in order to saturate the fabric. Then, extract water from the wet test load by spinning the load to a target moisture content between 54.0–61.0 percent of the bone-dry weight of the test load. If after extraction the moisture content is less than 54.0 percent, make a final mass adjustment, such that the moisture content is between 54.0–61.0 percent of the bone-dry weight of the test load, by adding water uniformly distributed among all of the test cloths in a very fine spray using a spray bottle.

* * * * *

2.8.1 *Vented clothes dryers.* For vented clothes dryers, before any test cycle, operate the dryer without a test load in the non-heat mode for 15 minutes or until the discharge air temperature is varying less than 1 °F for 10 minutes—whichever is longer—in the test installation location with the ambient conditions within the specified test condition tolerances of section 2.2 of this appendix.

* * * * *

**3. * * ***

3.3 *Test cycle.* Operate the clothes dryer at the maximum temperature setting and, if equipped with a timer, at the maximum time setting. Any other optional cycle settings that do not affect the temperature or time settings shall be tested in the as-shipped position, except that if the clothes dryer has network capabilities, the network settings must be disabled throughout testing if such settings can be disabled by the end-user and the product's user manual provides instructions on how to do so. If the network settings cannot be disabled by the end-user, or the product's user manual does not provide instruction for disabling network settings, then the unit must be tested with the network settings in the factory default configuration for the test cycle. If the clothes dryer does not have a separate temperature setting selection on the control panel, the maximum time setting should be used for the drying test cycle. Dry the load until the moisture content of the test load is between 2.5 and 5.0 percent of the bone-dry weight of the test load, at which point the test cycle is stopped, but do not permit the dryer to advance into cool down. If required, reset the timer to increase the length of the drying cycle. After stopping the test cycle, remove and weigh the test load within 5 minutes following termination of the test cycle. The clothes dryer shall not be stopped intermittently in the middle of the test cycle for any reason. Record the data specified by section 3.4 of this appendix. If the dryer automatically stops during a cycle because the condensation box is full of water, the test is stopped, and the test run is invalid, in which case the condensation box shall be emptied and the test re-run from the beginning. For ventless clothes dryers, during the time between two cycles, the door of the dryer shall be closed except for loading and unloading.

* * * * *

3.4.1 Bone-dry weight of the test load, $W_{bonedry}$, as described in section 2.7.1 of this appendix.

3.4.2 Moisture content of the wet test load before the test, IMC, as described in section 2.7.2 of this appendix.

3.4.3 Moisture content of the dry test load obtained after the test, FMC, as described in section 3.3 of this appendix.

* * * * *

3.6 *Standby mode and off mode power.* Connect the clothes dryer to a watt meter as specified in section 2.4.7 of this appendix. Establish the testing conditions set forth in section 2 of this appendix.

3.6.1 Perform standby mode and off mode testing after completion of an active mode drying cycle included as part of the test cycle; after removing the test load; without changing the control panel settings used for the active mode drying cycle; with the door closed; and without disconnecting the electrical energy supply to the clothes dryer between completion of the active mode drying cycle and the start of standby mode and off mode testing.

3.6.2 For clothes dryers that take some time to automatically enter a stable inactive mode or off mode state from a higher power state as discussed in Section 5, Paragraph 5.1, Note 1 of IEC 62301, allow sufficient time for the clothes dryer to automatically reach the default inactive/off mode state before proceeding with the test measurement.

3.6.3 Once the stable inactive/off mode state has been reached, measure and record the default inactive/off mode power, $P_{default}$, in watts, following the test procedure for the sampling method specified in Section 5, Paragraph 5.3.2 of IEC 62301.

3.6.4 For a clothes dryer with a switch (or other means) that can be optionally selected by the end user to achieve a lower-power inactive/off mode state than the default inactive/off mode state measured in section 3.6.3 of this appendix, after performing the measurement in section 3.6.3 of this appendix, activate the switch (or other means) to the position resulting in the lowest power consumption and repeat the measurement procedure described in section 3.6.3 of this appendix. Measure and record the lowest inactive/off mode power, $P_{lowest}$, in watts.

**4.** * * *

4.1 *Total per-cycle electric dryer energy consumption.* Calculate the total electric dryer energy consumption per cycle, $E_{ce}$, expressed in kilowatt-hours per cycle and defined as:

$E_{ce} = [53.5/(IMC - FMC)] \times E_t \times$ field use,

Where:

$E_t$ = the energy recorded in section 3.4.5 of this appendix.

53.5 = an experimentally established value for the percent reduction in the moisture content of the test load during a laboratory test cycle expressed as a percent.

field use = field use factor,

= 1.18 for clothes dryers with time termination control systems only without any automatic termination control functions.

= 1.04 for clothes dryers with automatic control systems that meet the requirements of the definition for automatic termination control in section 1.4 of this appendix, including those that also have a supplementary timer control, or that may also be manually controlled.

IMC = the moisture content of the wet test load as recorded in section 3.4.2 of this appendix.

FMC = the moisture content of the dry test load as recorded in section 3.4.3 of this appendix.

4.2 *Per-cycle gas dryer electrical energy consumption.* Calculate the gas dryer electrical energy consumption per cycle, $E_{ge}$, expressed in kilowatt-hours per cycle and defined as:

$E_{ge} = [53.5/(IMC - FMC)] \times E_{te} \times$ field use,

Where:

$E_{te}$ = the energy recorded in section 3.4.6.1 of this appendix.

field use, 53.5, $MC_w$, and $MC_d$ as defined in section 4.1 of this appendix.

4.3 *Per-cycle gas dryer gas energy consumption.* Calculate the gas dryer gas energy consumption per cycle, $E_{gg}$, expressed in Btus per cycle and defined as:

$E_{gg} = [53.5/(MC_w - MC_d)] \times E_{tg} \times$ field use $\times$ GEF

Where:

$E_{tg}$ = the energy recorded in section 3.4.6.2 of this appendix.

GEF = corrected gas heat value (Btu per cubic feet) as defined in section 3.4.6.3 of this appendix.

field use, 53.5, IMC, and FMC as defined in section 4.1 of this appendix.

* * * * *

4.5 *Per-cycle standby mode and off mode energy consumption.* Calculate the clothes dryer per-cycle standby mode and off mode energy consumption, $E_{TSO}$, expressed in kilowatt-hours per cycle and defined as:

$E_{TSO} = [(P_{default} \times S_{default}) + (P_{lowest} \times S_{lowest})] \times K/283$

Where:

$P_{default}$ = Default inactive/off mode power, in watts, as measured in section 3.6.3 of this appendix.

$P_{lowest}$ = Lowest inactive/off mode power, in watts, as measured in section 3.6.4 of this appendix for clothes dryer with a switch (or other means) that can be optionally selected by the end user to achieve a lower-power inactive/off mode than the default inactive/off mode; otherwise, $P_{lowest}$=0.

$S_{default}$ = Annual hours in default inactive/off mode, defined as 8,620 if no optional lowest-power inactive/off mode is available; otherwise 4,310.

$S_{lowest}$ = Annual hours in lowest-power inactive/off mode, defined as 0 if no optional lowest-power inactive/off mode is available; otherwise 4,310.

K = Conversion factor of watt-hours to kilowatt-hours = 0.001.

283 = Representative average number of clothes dryer cycles in a year.

8,620 = Combined annual hours for inactive and off mode.

4,310 = One-half of the combined annual hours for inactive and off mode.

* * * * *

■ 8. Appendix D2 to subpart B of part 430 is amended by:

■ a. Revising the introductory note;

■ b. Adding section 0;

■ c. Revising section 1.3;

■ d. Removing the word ''clothes'', in section 1.6, and adding in its place ''cloths'';

■ e. Removing sections 1.8, 1.15, and 1.19;

■ f. Redesignating sections 1.9 through 1.11 as sections 1.8 through 1.10, sections 1.13 and 1.14 as sections 1.14 and 1.15, and section 1.20 as section 1.19;

■ g. Adding new sections 1.11, 1.13, and 1.20;

■ h. Removing the word ''clasification'', in section 1.16, and adding in its place ''classification'';

■ i. Revising the first sentence of section 2.1.1 and revising section 2.1.2;

■ j. Revising the first sentence of section 2.1.3;

■ k. Revising sections 2.2.1, 2.3.2.1, and 2.3.2.2;

■ l. Adding section 2.3.2.3;

■ m. Redesignating section 2.4.1 as section 2.4.1.1;

■ n. Adding new section 2.4.1;

■ o. Revising newly redesignated 2.4.1.1;

■ p. Revising sections 2.7.1, 2.7.2, and 2.8.1;

■ q. In section 3.1, in the last sentence of the introductory text, adding the text ''to the nearest 0.1 cubic foot'' following the text ''is calculated'';

■ r. Revising sections 3.3.1, 3.3.2, 3.4.1, 3.4.2, and 3.4.3;

■ s. Removing section 3.5;

■ t. Redesignating sections 3.6, 3.6.1, and 3.6.2 as sections 3.5, 3.5.1, and 3.5.2, respectively;

■ u. Revising newly redesignated sections 3.5, 3.5.1, and 3.5.2;

■ v. Adding sections 3.5.3 and 3.5.4;

■ w. Revising sections 4.1, 4.2, 4.3, 4.4, and 4.5;

■ x. Adding section 4.5.1;

■ y. Removing section 4.7; and

■ z. Redesignating section 4.8 as section 4.7.

The revisions and additions read as follows:

## Appendix D2 to Subpart B of Part 430—Uniform Test Method for Measuring the Energy Consumption of Clothes Dryer

*Note:* The procedures in either appendix D1 to this subpart or this appendix must be used to determine compliance with energy conservation standards for clothes dryers manufactured on or after January 1, 2015. Manufacturers must use a single appendix for all representations, including certifications of compliance, and may not use appendix D1 to this subpart for certain representations and this appendix for other representations. Per-cycle standby mode and off mode energy consumption in section 4.5 of this appendix is calculated using the value for the annual representative average number of clothes dryer cycles in a year specified in section 4.5.1(a) of this appendix until the compliance date of any amended energy conservation standards for these products. Beginning on the compliance date of any amended energy conservation standards for these products per-cycle standby mode and off mode energy consumption in section 4.5 of this appendix is calculated using the value for the annual representative average number of clothes dryer cycles in a year specified in section 4.5.1(b) of this appendix.

### 0. Incorporation by Reference

DOE incorporated by reference in § 430.3 the entire standard for AHAM HLD–1 and IEC 62301, however, only enumerated provisions of those documents are applicable to this appendix. In cases where there is a conflict between any industry standard(s) and this appendix, the language of the test procedure in this appendix takes precedence over the industry standard(s).

(1) AHAM HLD–1:

(i) Section 3.3.5.1 ''Standard Simulator'' as referenced in sections 2.1.2 through 2.1.3 of this appendix.

(ii) [Reserved]

(2) IEC 62301:

(i) Section 5, Paragraph 5.1, Note 1 as referenced in section 3.5.2 of this appendix.

(ii) Section 5, Paragraph 5.3.2 ''Sampling Method'' as referenced in section 3.5.3 of this appendix.

* * * * *

**1.** * * *

1.3 ''AHAM HLD–1'' means the test standard published by the Association of Home Appliance Manufacturers, titled ''Household Tumble Type Clothes Dryers,'' ANSI-approved June 11, 2010, ANSI/AHAM HLD–1–2010.

* * * * *

1.11 ''Final moisture content'' (''FMC'') means the ratio of the weight of water contained by the dry test load (*i.e.,* after completion of the drying cycle) to the bone-dry weight of the test load, expressed as a percent.

* * * * *

1.13 ''Initial moisture content'' (''IMC'') means the ratio of the weight of water contained by the damp test load (*i.e.,* prior to completion of the drying cycle) to the bone-dry weight of the test load, expressed as a percent.

* * * * *

1.20 ''Vented clothes dryer'' means a clothes dryer that exhausts the evaporated moisture from the cabinet.

* * * * *

**2.** * * *

2.1.1 * * * For both vented clothes dryers and ventless clothes dryers, install the clothes dryer in accordance with manufacturer's instructions as shipped with the unit. * * *

2.1.2 *Vented clothes dryers.* For vented clothes dryers, the dryer exhaust shall be restricted by adding the AHAM exhaust simulator described in section 3.3.5.1 of AHAM HLD–1.

2.1.3 * * * For ventless clothes dryers, the dryer shall be tested without the AHAM exhaust simulator. * * *

* * * * *

2.2.1 For drying testing, maintain the room ambient air temperature at 75 ±3 F and the room relative humidity at 50 percent ±10 percent relative humidity.

* * * * *

2.3.2.1 *Natural gas supply.* Maintain the gas supply to the clothes dryer immediately ahead of all controls at a pressure of 7 to 10 inches of water column. The natural gas supplied should have a heating value of approximately 1,025 Btus per standard cubic foot. The actual heating value, $H_n2$, in Btus per standard cubic foot, for the natural gas to be used in the test shall be obtained either from measurements using a standard continuous flow calorimeter as described in section 2.4.6 of this appendix or by the purchase of bottled natural gas whose Btu rating is certified to be at least as accurate a rating as could be obtained from measurements with a standard continuous flow calorimeter as described in section 2.4.6 of this appendix.

2.3.2.2 *Propane gas supply.* Maintain the gas supply to the clothes dryer immediately ahead of all controls at a pressure of 11 to 13 inches of water column. The propane gas supplied should have a heating value of approximately 2,500 Btus per standard cubic foot. The actual heating value, $H_p$, in Btus per standard cubic foot, for the propane gas to be used in the test shall be obtained either from measurements using a standard continuous flow calorimeter as described in section 2.4.6 of this appendix or by the purchase of bottled gas whose Btu rating is certified to be at least as accurate a rating as could be obtained from measurement with a standard continuous calorimeter as described in section 2.4.6 of this appendix.

2.3.2.3 *Hourly Btu Rating.* Maintain the hourly Btu rating of the burner within ±5 percent of the rating specified by the manufacturer. If the hourly Btu rating of the burner cannot be maintained within ±5 percent of the rating specified by the manufacturer, make adjustments in the following order until an hourly Btu rating of the burner within ±5 percent of the rating specified by the manufacturer is achieved:

(1) Modify the gas inlet supply pressure within the allowable range specified in section 2.3.2.1 or 2.3.2.2 of this appendix, as applicable;

(2) If the clothes dryer is equipped with a gas pressure regulator, modify the outlet pressure of the gas pressure regulator within ±10 percent of the value recommended by the manufacturer in the installation manual, on the nameplate sticker, or wherever the manufacturer makes such a recommendation for the basic model; and

(3) Modify the orifice as necessary to achieve the required hourly Btu rating.

* * * * *

2.4.1 *Weighing scales.*

2.4.1.1 *Weighing scale for test cloth.* The scale shall have a range of 0 to a maximum of 60 pounds with a resolution of at least 0.001 pounds and a maximum error no greater than 0.1 percent of any measured value within the range of 3 to 15 pounds.

* * * * *

2.7.1 *Load size.* Determine the load size for the unit under test, according to Table 1 of this section.

TABLE 1—TEST LOADS

| Unit under test | Test load (bone dry weight) |
|---|---|
| Standard size clothes dryer. | 8.45 pounds ± .085 pounds. |
| Compact size clothes dryer. | 3.00 pounds ± .03 pounds. |

Each test load must consist of energy test cloths and no more than five energy stuffer cloths.

2.7.2 *Test load preparation.* Dampen the load by agitating it in water whose temperature is 60 °F ±5 °F and consists of 0 to 17 parts per million hardness for approximately 2 minutes to saturate the fabric. Then, extract water from the wet test load by spinning the load until the moisture content of the load is between 52.5 and 57.5 percent of the bone-dry weight of the test load. Make a final mass adjustment, such that the moisture content is 57.5 percent ±0.33 percent by adding water uniformly distributed among all of the test cloths in a very fine spray using a spray bottle.

* * * * *

2.8.1 *Vented clothes dryers.* For vented clothes dryers, before any test cycle, operate the dryer without a test load in the non-heat mode for 15 minutes or until the discharge air temperature is varying less than 1 °F for 10 minutes—whichever is longer—in the test installation location with the ambient conditions within the specified test condition tolerances of section 2.2 of this appendix.

* * * * *

**3.** * * *

3.3.1 *Timer dryers.* For timer dryers, operate the clothes dryer at the maximum temperature setting and, if equipped with a timer, at the maximum time setting. Any other optional cycle settings that do not affect the temperature or time settings shall be tested in the as-shipped position, except that if the clothes dryer has network capabilities, the network settings must be disabled throughout testing if such settings can be disabled by the end-user and the product's user manual provides instructions on how to do so. If the network settings cannot be disabled by the end-user, or the product's user manual does not provide instruction for disabling network settings, then the unit must be tested with the network settings in the factory default configuration for the test cycle. If the clothes dryer does not have a separate temperature setting selection on the control panel, the maximum time setting should be used for the drying test cycle. Dry the load until the moisture content of the test load is between 1 and 2.5 percent of the bone-dry weight of the test load, at which point the test cycle is stopped, but do not permit the dryer to advance into cool down. If required, reset the timer to increase the length of the drying cycle. After stopping the test cycle, remove and weigh the test load within 5 minutes following termination of the test cycle. The clothes dryer shall not be stopped intermittently in the middle of the test cycle for any reason. Record the data specified by section 3.4 of this appendix. If the dryer automatically stops during a cycle because the condensation box is full of water, the test is stopped, and the test run is invalid, in which case the condensation box shall be emptied and the test re-run from the beginning. For ventless clothes dryers, during the time between two cycles, the door of the dryer shall be closed except for loading and unloading.

3.3.2 *Automatic termination control dryers.* For automatic termination control dryers, a ''normal'' program shall be selected for the test cycle. For dryers that do not have a ''normal'' program, the cycle recommended by the manufacturer for drying cotton or linen clothes shall be selected. Where the drying temperature setting can be chosen independently of the program, it shall be set to the maximum. Where the dryness level setting can be chosen independently of the program, it shall be set to the ''normal'' or ''medium'' dryness level setting. If such designation is not provided, then the dryness level shall be set at the mid-point between the minimum and maximum settings. If an even number of discrete settings are provided, use the next-highest setting above the midpoint, in the direction of the maximum dryness setting or next-lowest setting below the midpoint, in the direction of the minimum dryness setting. Any other

optional cycle settings that do not affect the program, temperature or dryness settings shall be tested in the as-shipped position, except that if the clothes dryer has network capabilities, the network settings must be disabled throughout testing if such settings can be disabled by the end-user and the product's user manual provides instructions on how to do so. If the network settings cannot be disabled by the end-user, or the product's user manual does not provide instruction for disabling network settings, then the unit must be tested with the network settings in the factory default configuration for the test cycle.

Operate the clothes dryer until the completion of the programmed cycle, including the cool down period. The cycle shall be considered complete when the dryer indicates to the user that the cycle has finished (by means of a display, indicator light, audible signal, or other signal) and the heater and drum/fan motor shuts off for the final time. If the clothes dryer is equipped with a wrinkle prevention mode (*i.e.,* that continuously or intermittently tumbles the clothes dryer drum after the clothes dryer indicates to the user that the cycle has finished) that is activated by default in the as-shipped position or if manufacturers' instructions specify that the feature is recommended to be activated for normal use, the cycle shall be considered complete after the end of the wrinkle prevention mode. After the completion of the test cycle, remove and weigh the test load within 5 minutes following termination of the test cycle. Record the data specified in section 3.4 of this appendix. If the final moisture content is greater than 2 percent, the results from the test are invalid and a second run must be conducted. Conduct the second run of the test on the unit using the highest dryness level setting. If, on this second run, the dryer does not achieve a final moisture content of 2 percent or lower, the dryer has not sufficiently dried the clothes and the test results may not be used for certification of compliance with energy conservation standards. If the dryer automatically stops during a cycle because the condensation box is full of water, the test is stopped, and the test run is invalid, in which case the condensation box shall be emptied and the test re-run from the beginning. For ventless clothes dryers, during the time between two cycles, the door of the dryer shall be closed except for loading and unloading.

* * * * *

3.4.1 Bone-dry weight of the test load, $W_{bonedry}$, as described in section 2.7.1 of this appendix.

3.4.2 Moisture content of the wet test load before the test, IMC, as described in section 2.7.2 of this appendix.

3.4.3 Moisture content of the dry test load obtained after the test, FMC, as described in section 3.3 of this appendix.

* * * * *

3.5 *Standby mode and off mode power.* Connect the clothes dryer to a watt meter as specified in section 2.4.7 of this appendix. Establish the testing conditions set forth in section 2 of this appendix.

3.5.1 Perform standby mode and off mode testing after completion of an active mode drying cycle included as part of the test cycle; after removing the test load; without changing the control panel settings used for the active mode drying cycle; with the door closed; and without disconnecting the electrical energy supply to the clothes dryer between completion of the active mode drying cycle and the start of standby mode and off mode testing.

3.5.2 For clothes dryers that take some time to automatically enter a stable inactive mode or off mode state from a higher power state as discussed in Section 5, Paragraph 5.1, Note 1 of IEC 62301, allow sufficient time for the clothes dryer to automatically reach the default inactive/off mode state before proceeding with the test measurement.

3.5.3 Once the stable inactive/off mode state has been reached, measure and record the default inactive/off mode power, $P_{default}$, in watts, following the test procedure for the sampling method specified in Section 5, Paragraph 5.3.2 of IEC 62301.

3.5.4 For a clothes dryer with a switch (or other means) that can be optionally selected by the end user to achieve a lower-power inactive/off mode state than the default inactive/off mode state measured in section 3.5.3 of this appendix, after performing the measurement in section 3.5.3 of this appendix, activate the switch (or other means) to the position resulting in the lowest power consumption and repeat the measurement procedure described in section 3.5.3 of this appendix. Measure and record the lowest inactive/off mode power, $P_{lowest}$, in watts.

**4. * * ***

4.1 *Total per-cycle electric dryer energy consumption.* Calculate the total per-cycle electric dryer energy consumption required to achieve a final moisture content of 2 percent or less, $E_{ce,}$ expressed in kilowatt-hours per cycle and defined as:

$E_{ce} = E_t$,

for automatic termination control dryers, and,

$E_{ce} = [55.5/(IMC - FMC)] \times E_t \times$ field use,

for timer dryers

*Where:*

55.5 = an experimentally established value for the percent reduction in the moisture content of the test load during a laboratory test cycle expressed as a percent.

$E_t$ = the energy recorded in section 3.4.5 of this appendix.

field use = 1.18, the field use factor for clothes dryers with time termination control systems only without any automatic termination control functions.

IMC = the moisture content of the wet test load as recorded in section 3.4.2 of this appendix.

FMC = the moisture content of the dry test load as recorded in section 3.4.3 of this appendix.

4.2 *Per-cycle gas dryer electrical energy consumption.* Calculate the per-cycle gas dryer electrical energy consumption required to achieve a final moisture content of 2 percent or less, $E_{ge,}$ expressed in kilowatt-hours per cycle and defined as:

$E_{ge} = E_{te}$,

for automatic termination control dryers, and,

$E_{ge} = [55.5/(IMC - FMC)] \times E_{te} \times$ field use,

for timer dryers

*Where:*

$E_{te}$ = the energy recorded in section 3.4.6.1 of this appendix.

field use, 55.5, IMC, and FMC as defined in section 4.1 of this appendix.

4.3 *Per-cycle gas dryer gas energy consumption.* Calculate the per-cycle gas dryer gas energy consumption required to achieve a final moisture content of 2 percent or less, $E_{gg}$, expressed in Btus per cycle and defined as:

$E_{gg} = E_{tg} \times GEF$

for automatic termination control dryers, and,

$E_{gg} = [55.5/(IMC - FMC)] \times E_{tg} \times$ field use $\times$ GEF

for timer dryers

Where:

$E_{tg}$ = the energy recorded in section 3.4.6.2 of this appendix.

GEF = corrected gas heat value (Btu per cubic foot) as defined in section 3.4.6.3 of this appendix,

field use, 55.5, IMC, and FMC as defined in section 4.1 of this appendix.

4.4 *Total per-cycle gas dryer energy consumption expressed in kilowatt-hours.* Calculate the total per-cycle gas dryer energy consumption required to achieve a final moisture content of 2 percent or less, $E_{cg}$, expressed in kilowatt-hours per cycle and defined as:

$E_{cg} = E_{ge} + (E_{gg}/3412 \text{ Btu/kWh})$

Where:

$E_{ge}$ = the energy calculated in section 4.2 of this appendix

$E_{gg}$ = the energy calculated in section 4.3 of this appendix

4.5 *Per-cycle standby mode and off mode energy consumption.* Calculate the clothes dryer per-cycle standby mode and off mode energy consumption, $E_{TSO}$, expressed in kilowatt-hours per cycle and defined as:

$E_{TSO} = [(P_{default} \times S_{default}) + (P_{lowest} \times S_{lowest})] \times K/C_{annual}$

Where:

$P_{default}$ = Default inactive/off mode power, in watts, as measured in section 3.5.3 of this appendix.

$P_{lowest}$ = Lowest inactive/off mode power, in watts, as measured in section 3.5.4 of this appendix for clothes dryer with a switch (or other means) that can be optionally selected by the end user to achieve a lower-power inactive/off mode than the default inactive/off mode; otherwise, $P_{lowest}$ =0.

$S_{default}$ = Annual hours in default inactive/off mode, defined as 8,620 if no optional lowest-power inactive/off mode is available; otherwise 4,310.

$S_{lowest}$ = Annual hours in lowest-power inactive/off mode, defined as 0 if no optional lowest-power inactive/off mode is available; otherwise 4,310.

K = Conversion factor of watt-hours to kilowatt-hours = 0.001.

$C_{annual}$ = Representative average number of clothes dryer cycles in a year as specified in section 4.5.1.

8,620 = Combined annual hours for inactive and off mode.

4,310 = One-half of the combined annual hours for inactive and off mode.

4.5.1 *Representative average number of clothes dryer cycles in a year.* Per the Introductory Note:

(1) $C_{annual}$ = 283

(2) $C_{annual}$ = 236

* * * * *

[FR Doc. 2021–21810 Filed 10–7–21; 8:45 am]

**BILLING CODE 6450–01–P**

# Reader Aids

**Federal Register**

Vol. 86, No. 193

Friday, October 8, 2021

## CUSTOMER SERVICE AND INFORMATION

| | |
|---|---|
| **Federal Register/Code of Federal Regulations** | |
| General Information, indexes and other finding aids | **202–741–6000** |
| **Laws** | **741–6000** |
| **Presidential Documents** | |
| Executive orders and proclamations | **741–6000** |
| **The United States Government Manual** | **741–6000** |
| **Other Services** | |
| Electronic and on-line services (voice) | **741–6020** |
| Privacy Act Compilation | **741–6050** |

## ELECTRONIC RESEARCH

### World Wide Web

Full text of the daily Federal Register, CFR and other publications is located at: **www.govinfo.gov.**

Federal Register information and research tools, including Public Inspection List and electronic text are located at: **www.federalregister.gov.**

### E-mail

**FEDREGTOC** (Daily Federal Register Table of Contents Electronic Mailing List) is an open e-mail service that provides subscribers with a digital form of the Federal Register Table of Contents. The digital form of the Federal Register Table of Contents includes HTML and PDF links to the full text of each document.

To join or leave, go to **https://public.govdelivery.com/accounts/USGPOOFR/subscriber/new**, enter your email address, then follow the instructions to join, leave, or manage your subscription.

**PENS** (Public Law Electronic Notification Service) is an e-mail service that notifies subscribers of recently enacted laws.

To subscribe, go to **http://listserv.gsa.gov/archives/publaws-l.html and select** *Join or leave the list (or change settings);* then follow the instructions.

**FEDREGTOC** and **PENS** are mailing lists only. We cannot respond to specific inquiries.

**Reference questions.** Send questions and comments about the Federal Register system to: **fedreg.info@nara.gov**

The Federal Register staff cannot interpret specific documents or regulations.

## FEDERAL REGISTER PAGES AND DATE, OCTOBER

54339–54586 ..... 1
54587–54800 ..... 4
54801–55468 ..... 5
55469–55684 ..... 6
55685–56180 ..... 7
56181–56644 ..... 8

## CFR PARTS AFFECTED DURING OCTOBER

At the end of each month the Office of the Federal Register publishes separately a List of CFR Sections Affected (LSA), which lists parts and sections affected by documents published since the revision date of each title.

**3 CFR**

**Proclamations**
10266 ..... 55443
10267 ..... 55445
10268 ..... 55447
10269 ..... 55449
10270 ..... 55451
10271 ..... 55455
10272 ..... 55459
10273 ..... 55461
10274 ..... 55463
10275 ..... 55469
10276 ..... 55471
10277 ..... 55473
10278 ..... 56181

**Executive Orders**
13889 (superseded in part by 14048) ..... 55465
11287 (amended by 14048) ..... 55465
12382 (amended by 14048) ..... 55465
13231 (amended by 14048) ..... 55465
13265 (amended by 14048) ..... 55465
14048) ..... 55465

**5 CFR**
890 ..... 55980

**6 CFR**
5 ..... 55475

**Proposed Rules:**
5 ..... 55528

**7 CFR**
870 ..... 54339
1427 ..... 54339
4280 ..... 54587

**10 CFR**
72 ..... 54341, 54801, 55685
110 ..... 55476
429 ..... 56608
430 ..... 56608

**Proposed Rules:**
72 ..... 54410
429 ..... 54412
431 ..... 54412

**12 CFR**
614 ..... 54347
615 ..... 54347
620 ..... 54347
628 ..... 54347

**Proposed Rules:**
1002 ..... 56356

**14 CFR**
13 ..... 54514
25 ..... 54588
39 ..... 54801, 54803, 55479, 55685
71 ..... 54361, 54362, 54590, 54600, 54602, 55483, 55688
91 ..... 55485
97 ..... 54604, 54606

**Proposed Rules:**
39 ..... 54663, 55538, 55542, 55545, 55747, 55749, 56217, 56220, 56225, 56227, 56229, 56232
71 ..... 55752, 55754, 56234

**15 CFR**
290 ..... 56183
732 ..... 54807
734 ..... 54807
736 ..... 54807
738 ..... 54807
740 ..... 54807
742 ..... 54814
744 ..... 54807
748 ..... 54807
750 ..... 54807
770 ..... 54807
772 ..... 54807
774 ..... 54807, 55492
1500 ..... 55494

**16 CFR**
1 ..... 54819

**17 CFR**
232 ..... 55689
239 ..... 55689

**18 CFR**
389 ..... 54610

**21 CFR**
16 ..... 55224
73 ..... 55494, 56183
860 ..... 54826
878 ..... 56195
1100 ..... 54300
1107 ..... 55224, 55300
1114 ..... 55300

**22**
41 ..... 55692

**24 CFR**
247 ..... 55693
880 ..... 55693
882 ..... 55693
884 ..... 55693
966 ..... 55693

**Proposed Rules:**
203 ..... 54876
206 ..... 54876

**25 CFR**
90 ..... 54364

**26 CFR**

1 ....54367
54 ....55756
**Proposed Rules:**
54 ....55980

**28 CFR**

16 ....54368

**29 CFR**

1400 ....54851
1915 ....54611
2510 ....55980
2590 ....55980

**32 CFR**

323 ....54371
507 ....54615

**33 CFR**

100 ....54620, 55702, 56205
117 ....54851
165 ....54371, 54622, 56205, 56206
334 ....56208
**Proposed Rules:**
100 ....54879
334 ....56236

**34 CFR**

**Proposed Rules:**
Ch. II ....L54881, 54883
Ch. VI ....54666

**37 CFR**

6 ....55498

**38 CFR**

3 ....56213
36 ....56213
**Proposed Rules:**
1 ....55547

**39 CFR**

**Proposed Rules:**
3050 ....55548

**40 CFR**

9 ....55116, 55704
52 ....54373, 54375, 54377, 54379, 54624, 54626, 54628, 55501
70 ....54379
84 ....55116
262 ....54381
264 ....54381
265 ....54381
716 ....54386
721 ....55704
**Proposed Rules:**
52 ....54887
82 ....55549
271 ....54894
1502 ....55757
1507 ....55757
1508 ....55757

**41 CFR**

300–90 ....54630
300–74 ....54630
Appendix E to Ch. 301 ....54630

**42 CFR**

51c ....54390
59 ....56146
412 ....54631

**43 CFR**

3000 ....54636

**45 CFR**

147 ....55980
149 ....55980
670 ....54396
1304 ....55509

**47 CFR**

1 ....54852
25 ....54396
54 ....55515
63 ....54396
64 ....54871
73 ....54396, 54852
74 ....54852
**Proposed Rules:**
64 ....54897
73 ....54416, 54417

**48 CFR**

503 ....55516
511 ....55516
512 ....55516
513 ....55516
514 ....55516
515 ....55516
517 ....55516
519 ....55516
522 ....55516
523 ....55516
527 ....55516
528 ....55516
529 ....55516
532 ....55516
536 ....55516
537 ....55516
538 ....55516
539 ....55516
541 ....55516
542 ....55516
543 ....55516
546 ....55516
549 ....55516
552 ....55516
570 ....55516
802 ....54402
852 ....54402, 54405
853 ....54402
871 ....54405
1502 ....55708
1512 ....55708
1513 ....55708
1516 ....55708
1532 ....55708
1539 ....55708
1552 ....55708
**Proposed Rules:**
2 ....55769
19 ....55769
52 ....55769

**49 CFR**

382 ....55718
383 ....55718
384 ....55718
390 ....55718
392 ....55718
801 ....54641

**50 CFR**

10 ....54642
622 ....54657, 54871, 54872
635 ....54659, 54873
648 ....54875
660 ....54407, 55525
665 ....55743
**Proposed Rules:**
17 ....55775
21 ....54667
300 ....55560, 55790
648 ....54903
679 ....55560
680 ....55560

## LIST OF PUBLIC LAWS

**Note:** No public bills which have become law were received by the Office of the Federal Register for inclusion in today's **List of Public Laws**.

**Last List October 5, 2021**

## Public Laws Electronic Notification Service (PENS)

**PENS** is a free electronic mail notification service of newly enacted public laws. To subscribe, go to *http://listserv.gsa.gov/archives/publaws-l.html*

**Note:** This service is strictly for E-mail notification of new laws. The text of laws is not available through this service. **PENS** cannot respond to specific inquiries sent to this address.