AUTHENTICATED
U.S. GOVERNMENT
INFORMATION
GPO

FEDERAL REGISTER

Vol. 86 Friday

No. 57 March 26, 2021

Pages 16023–16282

OFFICE OF THE FEDERAL REGISTER

The **FEDERAL REGISTER** (ISSN 0097–6326) is published daily, Monday through Friday, except official holidays, by the Office of the Federal Register, National Archives and Records Administration, under the Federal Register Act (44 U.S.C. Ch. 15) and the regulations of the Administrative Committee of the Federal Register (1 CFR Ch. I). The Superintendent of Documents, U.S. Government Publishing Office, is the exclusive distributor of the official edition. Periodicals postage is paid at Washington, DC.

The **FEDERAL REGISTER** provides a uniform system for making available to the public regulations and legal notices issued by Federal agencies. These include Presidential proclamations and Executive Orders, Federal agency documents having general applicability and legal effect, documents required to be published by act of Congress, and other Federal agency documents of public interest.

Documents are on file for public inspection in the Office of the Federal Register the day before they are published, unless the issuing agency requests earlier filing. For a list of documents currently on file for public inspection, see *www.federalregister.gov.*

The seal of the National Archives and Records Administration authenticates the Federal Register as the official serial publication established under the Federal Register Act. Under 44 U.S.C. 1507, the contents of the **Federal Register** shall be judicially noticed.

The **Federal Register** is published in paper and on 24x microfiche. It is also available online at no charge at *www.govinfo.gov*, a service of the U.S. Government Publishing Office.

The online edition of the **Federal Register** is issued under the authority of the Administrative Committee of the Federal Register as the official legal equivalent of the paper and microfiche editions (44 U.S.C. 4101 and 1 CFR 5.10). It is updated by 6:00 a.m. each day the **Federal Register** is published and includes both text and graphics from Volume 1, 1 (March 14, 1936) forward. For more information, contact the GPO Customer Contact Center, U.S. Government Publishing Office. Phone 202-512-1800 or 866-512-1800 (toll free). E-mail, *gpocusthelp.com.*

The annual subscription price for the **Federal Register** paper edition is $860 plus postage, or $929, for a combined **Federal Register, Federal Register** Index and List of CFR Sections Affected (LSA) subscription; the microfiche edition of the **Federal Register** including the **Federal Register** Index and LSA is $330, plus postage. Six month subscriptions are available for one-half the annual rate. The prevailing postal rates will be applied to orders according to the delivery method requested. The price of a single copy of the daily **Federal Register,** including postage, is based on the number of pages: $11 for an issue containing less than 200 pages; $22 for an issue containing 200 to 400 pages; and $33 for an issue containing more than 400 pages. Single issues of the microfiche edition may be purchased for $3 per copy, including postage. Remit check or money order, made payable to the Superintendent of Documents, or charge to your GPO Deposit Account, VISA, MasterCard, American Express, or Discover. Mail to: U.S. Government Publishing Office—New Orders, P.O. Box 979050, St. Louis, MO 63197-9000; or call toll free 1-866-512-1800, DC area 202-512-1800; or go to the U.S. Government Online Bookstore site, see *bookstore.gpo.gov.*

There are no restrictions on the republication of material appearing in the **Federal Register.**

How To Cite This Publication: Use the volume number and the page number. Example: 86 FR 12345.

Postmaster: Send address changes to the Superintendent of Documents, Federal Register, U.S. Government Publishing Office, Washington, DC 20402, along with the entire mailing label from the last issue received.

SUBSCRIPTIONS AND COPIES

PUBLIC

Subscriptions:

Paper or fiche	**202–512–1800**
Assistance with public subscriptions	**202–512–1806**
General online information	**202–512–1530; 1–888–293–6498**

Single copies/back copies:

Paper or fiche	**202–512–1800**
Assistance with public single copies	**1–866–512–1800 (Toll-Free)**

FEDERAL AGENCIES

Subscriptions:

Assistance with Federal agency subscriptions:

Email	*FRSubscriptions@nara.gov*
Phone	**202–741–6000**

The Federal Register Printing Savings Act of 2017 (Pub. L. 115-120) placed restrictions on distribution of official printed copies of the daily **Federal Register** to members of Congress and Federal offices. Under this Act, the Director of the Government Publishing Office may not provide printed copies of the daily **Federal Register** unless a Member or other Federal office requests a specific issue or a subscription to the print edition. For more information on how to subscribe use the following website link: *https://www.gpo.gov/frsubs.*

Printed on recycled paper.

Contents

Federal Register

Vol. 86, No. 57

Friday, March 26, 2021

Agency for Toxic Substances and Disease Registry
NOTICES
Agency Information Collection Activities; Proposals, Submissions, and Approvals, 16212–16214

Agricultural Marketing Service
PROPOSED RULES
Grapes Grown in a Designated Area of Southeastern California; Increased Assessment Rate, 16085–16087
NOTICES
Agency Information Collection Activities; Proposals, Submissions, and Approvals, 16182–16183
Agency Information Collection Activities; Proposals, Submissions, and Approvals:
Dairy Product Mandatory Reporting Program; Request for Extension and Revision, 16180–16181
Request for Information:
United States Standards for Sorghum, 16181–16182

Agriculture Department
See Agricultural Marketing Service

Centers for Disease Control and Prevention
NOTICES
Agency Information Collection Activities; Proposals, Submissions, and Approvals, 16214–16217

Centers for Medicare & Medicaid Services
NOTICES
Agency Information Collection Activities; Proposals, Submissions, and Approvals, 16218–16219
Privacy Act; Matching Program, 16217–16220

Chemical Safety and Hazard Investigation Board
NOTICES
Meetings; Sunshine Act, 16183

Civil Rights Commission
NOTICES
Meetings:
Hawai'i Advisory Committee, 16183

Coast Guard
PROPOSED RULES
Drawbridge Operations:
New Jersey Intracoastal Waterway, Point Pleasant, NJ, 16153–16156
NOTICES
Agency Information Collection Activities; Proposals, Submissions, and Approvals, 16231–16232

Commerce Department
See Foreign-Trade Zones Board
See International Trade Administration
See National Oceanic and Atmospheric Administration

Committee for Purchase From People Who Are Blind or Severely Disabled
NOTICES
Meetings, 16194–16195
Procurement List; Additions and Deletions, 16195

Copyright Office, Library of Congress
PROPOSED RULES
Copyright Alternative in Small-Claims Enforcement Act Regulations, 16156–16165

Drug Enforcement Administration
NOTICES
Bulk Manufacturer of Controlled Substances Application:
Marihuana: MMJ 95, LLC, 16237–16238

Education Department
NOTICES
Agency Information Collection Activities; Proposals, Submissions, and Approvals:
Application for the United States Presidential Scholars Program, 16198–16199
Private School Universe Survey 2019–20 and 2021–22, 16197–16198
Trends in International Mathematics and Science Study Field Test Sampling and Recruitment, 16196–16197
US Department of Education Pre-Authorized Debit Account Brochure and Application, 16198
Privacy Act; Matching Program; Correction, 16195–16196

Energy Department
See Energy Information Administration
See Federal Energy Regulatory Commission
RULES
Energy Conservation Program:
Test Procedure for Walk-In Coolers and Walk-In Freezers, 16027–16036
PROPOSED RULES
Procedures for the Issuance of Guidance Documents, 16114–16117
NOTICES
Agency Information Collection Activities; Proposals, Submissions, and Approvals, 16199

Energy Information Administration
NOTICES
Agency Information Collection Activities; Proposals, Submissions, and Approvals, 16199–16200

Environmental Protection Agency
RULES
Air Quality Designations:
2010 Primary Sulfur Dioxide National Ambient Air Quality Standard; Round 4, 16055–16075
Hazardous Waste Management System:
Identification and Listing of Hazardous Waste, 16075
PROPOSED RULES
Air Quality State Implementation Plans; Approvals and Promulgations:
Texas; Clean Air Act Requirements for Emissions Inventories for Nonattainment Areas for the 2015 Ozone National Ambient Air Quality Standards, 16171–16173
Approval of State Plan for Designated Facilities and Pollutants:
Georgia; Hospital/Medical/Infectious Waste Incineration Units, 16176–16179

State Plans for Designated Facilities and Pollutants; Approvals and Promulgations:
North Dakota; Control of Emissions from Existing Municipal Solid Waste Landfills; Control of Emissions from Existing Commercial and Industrial Solid Waste Incineration Units; Negative Declaration of Existing Hospital/Medical/Infectious Waste Incineration Units, 16173–16176
NOTICES
Administrative Settlement Agreement and Order on Consent for Response Action by Prospective Purchaser, 16207–16209
Agency Information Collection Activities; Proposals, Submissions, and Approvals:
Generic Clearance for the Collection of Qualitative Feedback on Agency Service Delivery, 16208
Environmental Impact Statements; Availability, etc.:
Weekly Receipt, 16207

Federal Aviation Administration
RULES
Airworthiness Directives:
Airbus Helicopters, 16043–16046
Airbus Helicopters Deutschland GmbH (Type Certificate Previously Held by Eurocopter Deutschland GmbH and Eurocopter Canada Ltd.) Helicopters, 16041–16043
Airbus SAS Airplanes, 16038–16041
IFR Altitudes; Miscellaneous Amendments, 16046–16049
Special Conditions:
The Boeing Company Model 787 Series Airplane; Seats with Pretensioner Restraint Systems, 16037–16038
PROPOSED RULES
Airworthiness Directives:
Airbus Helicopters Deutschland GmbH Helicopters, 16121–16123
Airbus SAS Airplanes, 16117–16121, 16130–16133
Pilatus Aircraft Ltd. Airplanes, 16124–16126
Pratt & Whitney Turbofan Engines, 16137–16140
The Boeing Company Airplanes, 16133–16137
Various Restricted Category Helicopters, 16126–16130

Federal Deposit Insurance Corporation
NOTICES
Meetings:
Advisory Committee on Community Banking, 16209

Federal Energy Regulatory Commission
NOTICES
Application:
Brookfield White Pine Hydro, LLC, Merimil Limited Partnership, and Eagle Creek Kennebec Hydro, LLC, 16201–16202
Green Mountain Power, 16202–16203, 16205–16206
Combined Filings, 16203–16205
Meetings:
Data Collection for Analytics and Surveillance and Market-Based Rate Purposes; Technical Workshop, 16203–16204
Request for Extension of Time:
Transcontinental Gas Pipe Line Co., LLC, 16200–16201, 16206–16207

Federal Highway Administration
NOTICES
Final Federal Agency Actions:
Proposed Highway in Idaho, 16274–16275

Federal Mine Safety and Health Review Commission
NOTICES
Meetings; Sunshine Act, 16209–16210

Federal Reserve System
NOTICES
Change in Bank Control:
Acquisitions of Shares of a Bank or Bank Holding Company, 16210

Fish and Wildlife Service
NOTICES
Endangered and Threatened Wildlife and Plants:
Four Draft Recovery Plans, 16232–16233
Permit Application:
Incidental Take and Proposed Habitat Conservation Plan for the Sand Skink and Blue-Tailed Mole Skink; Osceola County, FL; Categorical Exclusion, 16233–16234

Food and Drug Administration
NOTICES
Agency Information Collection Activities; Proposals, Submissions, and Approvals:
Office of Management and Budget Approvals, 16221–16222
Fee Rates Under the Over-the-Counter Monograph Drug User Fee Program for Fiscal Year 2021, 16223–16226
Final Debarment Order:
Ursula Wing, 16226–16227
Meetings:
Arthritis Advisory Committee, 16227–16229
Order:
Thomas J. Whalen: Final Debarment, 16222–16223
Requests for Nominations:
Voting Members on a Public Advisory Committee; Blood Products Advisory Committee, 16220–16221

Foreign Assets Control Office
NOTICES
Blocking or Unblocking of Persons and Properties, 16275–16276

Foreign-Trade Zones Board
NOTICES
Application for Expansion and Modification of Subzone:
Phillips 66 Co., Foreign-Trade Zone 149, Freeport, TX, 16183–16184

General Services Administration
NOTICES
Meetings:
Office of Federal High-Performance Green Buildings; Advisory Committee, 16210–16211
Office of Human Resources Management; SES Performance Review Board, 16210

Government Accountability Office
NOTICES
Methodology for Estimating Lump Sum Catch-up Payments to Eligible 9/11 Victims, 9/11 Spouses and 9/11 Dependents; Request for Comment, 16211–16212

Health and Human Services Department
See Agency for Toxic Substances and Disease Registry
See Centers for Disease Control and Prevention
See Centers for Medicare & Medicaid Services
See Food and Drug Administration

See National Institutes of Health
See Substance Abuse and Mental Health Services Administration

Homeland Security Department
See Coast Guard

Indian Affairs Bureau
NOTICES
Agency Information Collection Activities; Proposals, Submissions, and Approvals:
Application for Admission to Haskell Indian Nations University and to Southwestern Indian Polytechnic Institute, 16235–16236
Certificate of Degree of Indian or Alaska Native Blood, 16236
Class III Tribal-State Gaming Compact Process, 16234–16235

Interior Department
See Fish and Wildlife Service
See Indian Affairs Bureau

International Trade Administration
NOTICES
Antidumping or Countervailing Duty Investigations, Orders, or Reviews:
Certain Frozen Warmwater Shrimp from India, 16184–16185
Corrosion-Resistant Steel Products from the People's Republic of China, 16185–16186
Forged Steel Fittings from the People's Republic of China, 16186–16189
Polyethylene Terephthalate Resin from the Sultanate of Oman, 16191–16192
Xanthan Gum from the People's Republic of China, 16189–16191

International Trade Commission
NOTICES
Investigations; Determinations, Modifications, and Rulings, etc.:
Certain Organic Light-Emitting Diode Displays, Components Thereof, and Products Containing Same, 16237

Justice Department
See Drug Enforcement Administration
NOTICES
Proposed Consent Decrees:
Natural Resource Damage Claims at the Western Port Angeles Harbor Site, 16238–16239

Library of Congress
See Copyright Office, Library of Congress

National Institutes of Health
NOTICES
Meetings:
National Cancer Institute, 16229–16230
National Institute of Allergy and Infectious Diseases, 16229–16230
National Institute of Neurological Disorders and Stroke, 16231
National Institute on Aging, 16230–16231

National Oceanic and Atmospheric Administration
RULES
Atlantic Highly Migratory Species:
Commercial Aggregated Large Coastal Shark and Hammerhead Shark Management Group in the Atlantic Region; Retention Limit Adjustment, 16075–16077
Fisheries of the Northeastern United States:
Atlantic Deep-Sea Red Crab Fishery; Final 2021 Atlantic Deep-Sea Red Crab Specifications, 16077–16078
Revisions to Framework Adjustment 59 to the Northeast Multispecies Fishery Management Plan and Sector Annual Catch Entitlements; Correction, 16078–16084
NOTICES
Meetings:
Gulf of Mexico Fishery Management Council, 16193–16194
New England Fishery Management Council, 16192–16193
Western Pacific Fishery Management Council, 16194

National Science Foundation
NOTICES
Antarctic Conservation Act Permits, 16239
Meetings:
Advisory Committee for Cyberinfrastructure, 16239
Proposal Review Panel for Physics, 16239

Nuclear Regulatory Commission
PROPOSED RULES
American Society of Mechanical Engineers 2019–2020 Code Editions, 16087–16114
NOTICES
Exemption; Issuance:
Exelon Generation Co., LLC Three Mile Island Nuclear Station, Unit 1, 16241–16245
License Amendment and Exemption Issuance:
Westinghouse Electric Company, LLC; Columbia Fuel Fabrication Facility; and US Ecology, Inc.; Idaho Resource Conservation and Recovery Act Subtitle C Hazardous Disposal Facility Located Near Grand View, ID, 16239–16241

Presidential Documents
PROCLAMATIONS
Special Observances:
Education and Sharing Day, U.S.A. (Proc. 10159), 16023–16024
Honoring the Victims of the Tragedy in Boulder, CO (Proc. 10160), 16025

Securities and Exchange Commission
NOTICES
Agency Information Collection Activities; Proposals, Submissions, and Approvals, 16245–16247, 16249–16267, 16270
Self-Regulatory Organizations; Proposed Rule Changes:
Cboe Futures Exchange, LLC, 16247–16249, 16267–16269

Small Business Administration
NOTICES
Applications for New Awards:
Shuttered Venue Operators Grants, 16270–16274

State Department
PROPOSED RULES
Schedule of Fees for Consular Services:
Passport Security Surcharge, 16149–16153

NOTICES
Charter Renewal:
Shipping Advisory Committee, 16274

Substance Abuse and Mental Health Services Administration
NOTICES
Meetings:
Advisory Committee for Womens Services; Cancellation, 16231

Susquehanna River Basin Commission
PROPOSED RULES
Review and Approval of Projects, 16140–16148

Transportation Department
See Federal Aviation Administration
See Federal Highway Administration

Treasury Department
See Foreign Assets Control Office

Veterans Affairs Department
RULES
Billing and Collection for Medical Care and Services, 16050–16055
PROPOSED RULES
Veterans Legacy Grants Program, 16165–16171
NOTICES
Loan Guaranty:
Specially Adapted Housing Assistive Technology Grant Program, 16276–16280
Meetings:
Advisory Committee on Minority Veterans, 16280–16281

Reader Aids

Consult the Reader Aids section at the end of this issue for phone numbers, online resources, finding aids, and notice of recently enacted public laws.

To subscribe to the Federal Register Table of Contents electronic mailing list, go to https://public.govdelivery.com/accounts/USGPOOFR/subscriber/new, enter your e-mail address, then follow the instructions to join, leave, or manage your subscription.

CFR PARTS AFFECTED IN THIS ISSUE

A cumulative list of the parts affected this month can be found in the Reader Aids section at the end of this issue.

3 CFR

Proclamations:

10159 16023
10160 16025

7 CFR

Proposed Rules:

925 16085

10 CFR

431 16027

Proposed Rules:

50 16087
1061 16114

14 CFR

25 16037
39 (3 documents) 16038, 16041, 16043
95 16046

Proposed Rules:

39 (7 documents) 16117, 16121, 16124, 16126, 16130, 16133, 16137

18 CFR

Proposed Rules:

806 16140

22 CFR

Proposed Rules:

22 16149

33 CFR

Proposed Rules:

117 16153

37 CFR

Proposed Rules:

Ch. III 16156

38 CFR

17 16050

Proposed Rules:

38 16165

40 CFR

81 16055
261 16075

Proposed Rules:

52 16171
62 (2 documents) 16173, 16176

50 CFR

635 16075
648 (2 documents) 16077, 16078

Federal Register
Vol. 86, No. 57
Friday, March 26, 2021

Presidential Documents

Title 3—

The President

Proclamation 10159 of March 23, 2021

Education and Sharing Day, U.S.A., 2021

By the President of the United States of America

A Proclamation

If the isolation and loss of the last year has taught us anything, it is just how much we need each other, how intertwined our lives are, and how deeply we crave conversation, connection, and community. We are at our best when we work together and help our neighbors, whether down the road or around the world.

This lesson is at the heart of Education and Sharing Day, U.S.A., when we celebrate the role models, mentors, and leaders who devote themselves to the progress and success of each new generation, to reinforcing our common bonds, and to lifting up our highest ideals. Today, we mark the legacy of Rabbi Menachem Mendel Schneerson, the Lubavitcher Rebbe, a guiding light of the international Chabad-Lubavitch movement and a testament to the power and resilience of the human spirit. A witness to some of the 20th century's darkest events and greatest tragedies, he devoted his life to bringing healing by advancing justice, compassion, inclusivity, and fellowship worldwide. A tireless advocate for students of all ages, he sought to foster exchange, understanding, and unity among all people.

The global pandemic has brought some measure of struggle and sorrow to each of us, and amidst the larger tragedies—the tragic loss of so many lives and livelihoods—we have also missed the many small but meaningful moments that contribute to our shared humanity: a hug or handshake, a smile or a meal, the dignity of daily work, and the simple routines that give our lives greater structure and purpose. We have realized that one of the greatest gifts our schools give to our students and educators is time spent with each other—the daily opportunities to learn and grow together, face to face. There is no substitute for this experience and the wonder and wisdom it brings.

The American Rescue Plan will help to restore these connections. The plan dedicates the resources we need to defeat the pandemic and return to our lives and loved ones, and provides direct relief to families, small businesses, and communities. It also includes 130 billion dollars to help schools in every community reopen safely and soon, so that our children can return to the invaluable interactions with friends, teachers, and school staff that add up to so much more than the sum of their parts.

On this Education and Sharing Day, U.S.A., let us recommit ourselves to building an America that is more just, equal, unified, and prosperous. Let us leave our children a nation and a world that is better than the one we inherited—and, in the spirit of history's greatest teachers, let us help all of our students to love learning; seek lives of dignity, decency, and respect; and work together for the common good.

NOW, THEREFORE, I, JOSEPH R. BIDEN JR., President of the United States of America, by virtue of the authority vested in me by the Constitution and the laws of the United States, do hereby proclaim March 24, 2021, as Education and Sharing Day, U.S.A. I call upon all government officials, educators, volunteers, and all the people of the United States to observe this day with appropriate programs, ceremonies, and activities.

IN WITNESS WHEREOF, I have hereunto set my hand this twenty-third day of March, in the year of our Lord two thousand twenty-one, and of the Independence of the United States of America the two hundred and forty-fifth.

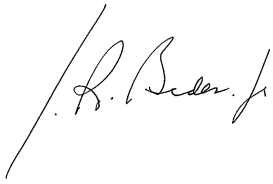

[FR Doc. 2021–06433
Filed 3–25–21; 8:45 am]
Billing code 3295–F1–P

Presidential Documents

Proclamation 10160 of March 23, 2021

Honoring the Victims of the Tragedy in Boulder, Colorado

By the President of the United States of America

A Proclamation

As a mark of respect for the victims of the senseless acts of violence perpetrated on March 22, 2021, in Boulder, Colorado, by the authority vested in me as President of the United States by the Constitution and the laws of the United States of America, I hereby order that the flag of the United States shall be flown at half-staff at the White House and upon all public buildings and grounds, at all military posts and naval stations, and on all naval vessels of the Federal Government in the District of Columbia and throughout the United States and its Territories and possessions until sunset, March 27, 2021. I also direct that the flag shall be flown at half-staff for the same length of time at all United States embassies, legations, consular offices, and other facilities abroad, including all military facilities and naval vessels and stations.

IN WITNESS WHEREOF, I have hereunto set my hand this twenty-third day of March, in the year of our Lord two thousand twenty-one, and of the Independence of the United States of America the two hundred and forty-fifth.

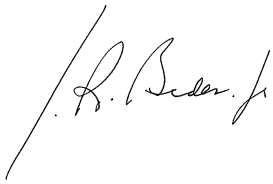

[FR Doc. 2021–06435
Filed 3–25–21; 8:45 am]
Billing code 3295–F1–P

Rules and Regulations

Federal Register
Vol. 86, No. 57
Friday, March 26, 2021

This section of the FEDERAL REGISTER contains regulatory documents having general applicability and legal effect, most of which are keyed to and codified in the Code of Federal Regulations, which is published under 50 titles pursuant to 44 U.S.C. 1510.

The Code of Federal Regulations is sold by the Superintendent of Documents.

DEPARTMENT OF ENERGY

10 CFR Part 431

[EERE–2020–BT–TP–0016]

RIN 1904–AF02

Energy Conservation Program: Test Procedure for Walk-In Coolers and Walk-In Freezers

AGENCY: Office of Energy Efficiency and Renewable Energy, Department of Energy.

ACTION: Final rule.

SUMMARY: This final rule amends the current test procedure for hot gas defrost unit coolers by making it consistent with a recent update to the industry testing standard that is incorporated by reference in the relevant Federal test procedure for walk-in freezer refrigeration systems. This final rule updates the equations used to calculate defrost energy and heat contributions applicable to these systems to provide a consistent performance evaluation between hot gas defrost and electric defrost unit coolers when tested alone.

DATES: The effective date of this rule April 26, 2021. The final rule changes will be mandatory for product testing starting September 22, 2021.

ADDRESSES: The docket, which includes **Federal Register** notices, public meeting attendee lists and transcripts, comments, and other supporting documents/materials, is available for review at *http://www.regulations.gov.* All documents in the docket are listed in the *http://www.regulations.gov* index. However, some documents listed in the index, such as those containing information that is exempt from public disclosure, may not be publicly available.

A link to the docket web page can be found at *https://beta.regulations.gov/search/docket?filter=%20EERE-2020-BT-TP-0016.* The docket web page contains instructions on how to access all documents, including public comments, in the docket. For further information on how to review the docket contact the Appliance and Equipment Standards Program staff at (202) 287–1445 or by email: *ApplianceStandardsQuestions@ee.doe.gov.*

FOR FURTHER INFORMATION CONTACT:

Dr. Stephanie Johnson, U.S. Department of Energy, Office of Energy Efficiency and Renewable Energy, Building Technologies Office, EE–2J, 1000 Independence Avenue SW, Washington, DC 20585–0121. Telephone: (202) 287–1943. Email: *WICF2020TP0016@ee.doe.gov.*

Mr. Michael Kido, U.S. Department of Energy, Office of the General Counsel, GC–33, 1000 Independence Avenue SW, Washington, DC 20585–0121. Telephone: (202) 586–8145. Email: *Michael.Kido@hq.doe.gov.*

Table of Contents

I. Authority and Background
A. Authority
B. Background
II. Synopsis of the Final Rule
III. Discussion
A. Scope of Applicability
B. Calculation of Defrost Energy and Heat Contribution for Hot Gas Defrost Unit Coolers Tested Alone
C. Effective and Compliance Dates
D. Test Procedure Costs, Harmonization, and Other Topics
1. Test Procedure Costs and Impact
2. Harmonization With Industry Standards
IV. Procedural Issues and Regulatory Review
A. Review Under Executive Order 12866
B. Review Under Executive Orders 13771 and 13777
C. Review Under the Regulatory Flexibility Act
D. Review Under the Paperwork Reduction Act of 1995
E. Review Under the National Environmental Policy Act of 1969
F. Review Under Executive Order 13132
G. Review Under Executive Order 12988
H. Review Under the Unfunded Mandates Reform Act of 1995
I. Review Under the Treasury and General Government Appropriations Act, 1999
J. Review Under Executive Order 12630
K. Review Under Treasury and General Government Appropriations Act, 2001
L. Review Under Executive Order 13211
M. Review Under Section 32 of the Federal Energy Administration Act of 1974
N. Congressional Notification
V. Approval of the Office of the Secretary

I. Authority and Background

Walk-in coolers and walk-in freezers (''WICFs'' or ''walk-ins'') are included in the list of ''covered equipment'' for which the U.S. Department of Energy (''DOE'') is authorized to establish and amend energy conservation standards and test procedures. (42 U.S.C. 6311(1)(G)) DOE has established test procedures and standards for the principal components that make up a walk-in: Panels, doors, and refrigeration systems. See title 10 of the Code of Federal Regulations (''CFR'') part 431 subpart R. Relevant to this document, DOE has established standards for walk-in freezer refrigeration systems as a component of walk-in freezers at 10 CFR 431.306, and test procedures for walk-in freezer refrigeration systems at 10 CFR 431.304(b)(4) and appendix C to subpart R of part 431 (''Appendix C''). The following sections discuss DOE's authority to establish test procedures for walk-ins and relevant background information regarding DOE's consideration of the procedures in Appendix C relevant to hot gas defrost unit coolers.

A. Authority

The Energy Policy and Conservation Act, as amended (''EPCA''),[1] authorizes DOE to regulate the energy efficiency of a number of consumer products and certain industrial equipment. (42 U.S.C. 6291–6317) Title III, Part C[2] of EPCA, added by Public Law 95–619, title IV, § 441(a), established the Energy Conservation Program for Certain Industrial Equipment, which sets forth a variety of provisions designed to improve energy efficiency. As amended by the Energy Independence and Security Act of 2007, Public Law 110–140 (Dec. 19, 2007), this equipment includes walk-ins, the subject of this document. (42 U.S.C. 6311(1)(G))

The energy conservation program under EPCA consists essentially of four parts: (1) Testing, (2) labeling, (3) Federal energy conservation standards, and (4) certification and enforcement procedures. Relevant provisions of EPCA include definitions (42 U.S.C. 6311), test procedures (42 U.S.C. 6314), labeling provisions (42 U.S.C. 6315), energy conservation standards (42 U.S.C. 6313), and the authority to

[1] All references to EPCA in this document refer to the statute as amended through America's Water Infrastructure Act of 2018, Public Law 115–270 (Oct. 23, 2018).

[2] For editorial reasons, upon codification in the U.S. Code, Part B was redesignated Part A–1.

require information and reports from manufacturers (42 U.S.C. 6316).

The Federal testing requirements consist of test procedures that manufacturers of covered equipment must use as the basis for: (1) Certifying to DOE that their equipment complies with the applicable energy conservation standards adopted pursuant to EPCA (42 U.S.C. 6316(a); 42 U.S.C. 6295(s)), and (2) making representations about the efficiency of that equipment (42 U.S.C. 6314(d)). Similarly, DOE uses these test procedures to determine whether the equipment complies with relevant standards promulgated under EPCA. (42 U.S.C. 6316(a); 42 U.S.C. 6295(s))

Federal energy efficiency requirements for covered equipment established under EPCA generally supersede State laws and regulations concerning energy conservation testing, labeling, and standards. (42 U.S.C. 6316(a) and (b); 42 U.S.C. 6297) DOE may, however, grant waivers of Federal preemption for particular State laws or regulations, in accordance with the procedures and other provisions of EPCA. (42 U.S.C. 6316(b)(2)(D))

Under 42 U.S.C. 6314, EPCA sets forth the criteria and procedures DOE must follow when prescribing or amending the test procedures for covered equipment. EPCA requires that any test procedures prescribed or amended under this section shall be reasonably designed to produce test results that reflect the energy efficiency, energy use or estimated annual operating cost of a given type of covered equipment during a representative average use cycle (as determined by the Secretary) and shall not be unduly burdensome to conduct. (42 U.S.C. 6314(a)(2))

EPCA provides specific requirements for determining the R value for certain walk-in components. (42 U.S.C. 6314(a)(9)(A)(i)–(iv)) In addition, EPCA requires that DOE establish test procedures to measure walk-in energy use. (42 U.S.C. 6314(a)(9)(B)(i)) DOE satisfied this requirement when it first established test procedures for this equipment in 2011. See generally, 76 FR 21580 (April 15, 2011) (final rule establishing test procedures for walk-in equipment). See also 10 CFR 431.304 and 10 CFR part 431, subpart R, appendices A through C.

If DOE determines that a test procedure amendment is warranted, it must publish a proposed test procedure and offer the public an opportunity to present oral and written comments on it. (42 U.S.C. 6314(b))

EPCA also requires that, at least once every 7 years, DOE evaluate test procedures for each type of covered equipment, including walk-ins, to determine whether amended test procedures would more accurately or fully comply with the requirements for the test procedures to not be unduly burdensome to conduct and be reasonably designed to produce test results that reflect energy efficiency, energy use, and estimated operating costs during a representative average use cycle. (42 U.S.C. 6314(a)(1)) In addition, if the Secretary determines that a test procedure amendment is warranted, the Secretary must publish proposed test procedures in the **Federal Register**, and afford interested persons an opportunity (of not less than 45 days' duration) to present oral and written data, views, and arguments on the proposed test procedures. (42 U.S.C. 6314(b)) If DOE determines that test procedure revisions are not appropriate, DOE must publish its determination not to amend the test procedures. (42 U.S.C. 6314(a)(1)(A)(ii))

DOE is publishing this final rule in satisfaction of its obligations specified in EPCA. (42 U.S.C. 6314(a))

B. Background

On May 13, 2014, DOE published a test procedure final rule (''May 2014 final rule'') that accommodated testing of complete refrigeration systems and for the individual components of split systems to be tested separately. 79 FR 27388, 27398. A split-system refrigeration system consists of two separate components: A unit cooler,[3] which is installed inside a walk-in enclosure, and a condensing unit,[4] which is installed outside the enclosure, either inside a building in which the walk-in is constructed, or outdoors. The amendments finalized in the May 2014 final rule accommodate testing of the entire ''matched pair'' refrigeration system (*i.e.,* a condensing unit and unit cooler together), the condensing unit alone, or the unit cooler alone. When testing an individual component alone, the energy use attributed to the other system component is represented by a default value or by using a default performance characteristic. Specifically, when testing a unit cooler alone, the condensing unit energy use is determined using the representative energy efficiency ratio (''EER'') specified for the appropriate adjusted dew point temperature in Table 17 of Air Conditioning, Heating, and Refrigeration Institute (''AHRI'') Standard 1250–2009 (''AHRI 1250–2009''). Energy use of the unit cooler's components, *i.e.,* its evaporator fan(s) and its electric defrost heater (for units that use electric defrost),[5] is directly measured during the test. Conversely, when testing a condensing unit alone, the compressor and condenser fan energy are directly measured, while the energy use of the components of the unit cooler are represented by default values. The test procedure provides default values for the evaporator fans, and, for low-temperature refrigeration systems, the energy use and heat load associated with defrost.[6] See Appendix C, Sections 3.4.2 through 3.4.5. The default defrost energy and heat values are based on representative energy use of electric defrost, by far the most common form of defrost. Electric defrost consists of electric resistance heaters built into the evaporator coil and the unit cooler drain pan that are energized occasionally during the day to warm the coil and melt the frost.

Additionally, the May 2014 final rule established a method for determination of annual energy walk-in factor (''AWEF'') for refrigeration systems with ''hot gas'' defrost, using nominal values to represent the energy use and heat load of this method. 79 FR 27388, 27401. Rather than using electric resistance coils embedded in the evaporator for defrosting, hot gas defrost uses refrigerant to transfer heat to the evaporator. That heat may be transferred from the ambient air outside the walk-in, but heat for defrosting can also be transferred from the compressor or a thermal storage component that stores heat generated during the compressor on-cycle. DOE notes that, unlike the default values for electric defrost, which are required for use only when testing condensing units, the hot gas defrost nominal values were to be used for any system using hot gas defrost (see § 431.303(c)(10)(xii) as finalized in the May 2014 final rule for unit coolers and complete refrigeration systems (*e.g.,*

[3] A unit cooler is defined as an assembly, including means for forced air circulation and elements by which heat is transferred from air to refrigerant, thus cooling the air, without any element external to the cooler imposing air resistance. 10 CFR 431.302.

[4] A condensing unit, for the purposes of DOE walk-in refrigeration system testing, is an assembly that (1) includes 1 or more compressors, a condenser, and one refrigeration circuit; and (2) is designed to serve one refrigerated load. 10 CFR 431.302.

[5] Electric defrost consists of electric resistance heaters built into the evaporator coil and the unit cooler drain pan that are energized occasionally during the day to warm the coil and melt the frost.

[6] Defrost is required to remove frost from the evaporator coils of refrigeration systems, which collects during the refrigeration system on-cycle as water vapor in the air freezes onto the cold evaporator surfaces. Defrost capability is required for freezers, but is optional for coolers, since the surrounding walk-in interior temperature is above freezing temperature and thus can melt the frost between on-cycles in many walk-in cooler applications.

matched pairs) and see § 431.303(c)(12)(ii) as finalized in the May 2014 final rule for condensing units). 79 FR 27388, 27413–27414.[7] The application of the hot gas defrost nominal values was established for all system configurations because an appropriate test method to accurately measure hot gas defrost that would not be unduly burdensome to conduct had not been developed. 79 FR 27388, 27401. As such, energy use and heat load default values were established for both hot gas defrost unit coolers and condensing units tested alone that use hot gas defrost. (The default values for calculating hot gas defrost energy and heat load established in the May 2014 final rule were much lower than the default values established for calculating energy use and heat load for electric defrost; thus, use of these values represented a ''hot gas defrost credit.'')

DOE most recently amended the test procedures for the performance requirements for walk-in refrigeration system components (*e.g.,* refrigeration systems such as unit coolers), in a final rule published on December 28, 2016. 81 FR 95758 (''December 2016 final rule''). That rule adopted a series of amendments to provisions affecting certain walk-in refrigeration systems, including removal of the performance credit for hot gas defrost systems. As established in the December 2016 final rule, a hot gas defrost condensing unit is tested without measuring the impacts of the hot gas defrost feature, and that feature will not affect the measured efficiency either positively or negatively. *See id.* In that sense, the test procedure for condensing units with hot gas defrost is the same as the test procedure for units with electric defrost. *Id.* These amendments had their initial origins as part of rulemaking negotiations held under the Appliance Standards and Rulemaking Federal Advisory Committee (''ASRAC''). See 80 FR 46521 (August 5, 2015) (establishing a WICF Working Group under ASRAC). DOE assigned to hot gas defrost unit coolers the same default values for electric defrost heat and energy use calculations that the test procedure assigns to dedicated condensing units that are not matched with a unit cooler for testing (*i.e.,* tested alone). 81 FR 95758, 95776. The default electric defrost energy and heat values were validated by testing unit coolers with measured gross capacity up to 18,000 Btu/h.[8] The approach adopted in the December 2016 final rule remains the current test method for addressing hot gas defrost.

Relatedly, DOE published a final rule on July 10, 2017, that adopted energy conservation standards for WICFs. 82 FR 31808 (''July 2017 final rule''). The analysis supporting the development of these standards considered only electric defrost walk-in refrigeration systems. Compliance with the amended energy conservation standards established in the July 2017 final rule has been required beginning July 10, 2020. *Id.*

In general, the current DOE test procedure requires testing of WICF refrigeration systems to be conducted pursuant to AHRI 1250–2009, with certain clarifications and modifications. Section 3.0 of Appendix C. Since the December 2016 final rule, AHRI has published a revised version of the 1250 standard, AHRI 1250–2020. AHRI 1250–2020 includes revised equations for calculation of the default electric defrost energy and heat load for condensing units tested alone, which are significantly less than the values in Appendix C. AHRI notified DOE on May 21, 2020 that some high-capacity hot gas defrost units might not comply with the energy conservation standards for which compliance has been required since July 10, 2020.[9]

DOE published a notice of proposed rulemaking (''NOPR'') on September 28, 2020, in which DOE proposed to amend the WICF test procedure to revise the defrost energy and heat contribution values for hot gas defrost unit coolers. 85 FR 60724 (''September 2020 NOPR''). DOE held a public meeting via webinar related to this NOPR on October 2, 2020. That proposal serves as the basis for this final rule.

II. Synopsis of the Final Rule

This final rule amends section 3.5 of Appendix C of the current test procedure, which assigns defrost energy and heat contribution values for hot gas defrost unit coolers tested alone, by incorporating equations consistent with Section C10.2.2 of Appendix C of AHRI 1250–2020 (including equations C46 through C49, which address electric defrost energy use for dedicated condensing units tested alone).[10]

Table II.1 summarizes the adopted amendments, compares the amendments to the current test procedure, and states the reason for the adopted change.

TABLE II.1—SUMMARY OF CHANGES IN THE AMENDED TEST PROCEDURE

Current DOE test procedure	Amended test procedure	Attribution
Defrost energy and heat contribution for hot gas defrost unit coolers are determined based on the calculation for electric defrost for dedicated condensing units that are not matched for testing.	Revise defrost energy and heat contribution values for hot gas defrost unit coolers to be consistent with the electric defrost energy use and heat contributions from section C10.2.2 in Appendix C of AHRI 1250–2020.	Industry Test Procedure update.

DOE has determined that the narrow amendments described in section III and adopted in this final rule would better evaluate the measured efficiency of the walk-in refrigeration system equipment using hot gas defrost compared to the current procedure, and that this narrow amendment will not cause the test procedure to be unduly burdensome to conduct. Discussion of DOE's actions are addressed in detail in section III of this document.

The effective date for the amended test procedures adopted in this final rule is 30 days after publication of this document in the **Federal Register**. Representations of energy use or energy efficiency must be based on testing in accordance with the amended test procedures beginning 180 days after the publication of this final rule. (See 42 U.S.C. 6314(d))

III. Discussion

The following sections describe the scope of equipment for which this final rule applies, the calculations that support this final rule, and effective compliance dates. DOE received comments in response to the September

[7] These requirements were later removed in a test procedure final rule published on December 28, 2016. 81 FR 95758, 95774–95777.

[8] See Docket EERE–2015–BT–STD–0016, No. 0007 at p. 31.

[9] Available at *https://regulations.gov/comment/EERE-2020-BT-TP-0016-0007.*

[10] DOE modified equation C49 by removing the divisor of 1.0 to simplify the equation. This change does not affect the result.

2020 NOPR from the interested parties listed in Table III.1.

TABLE III.1—SEPTEMBER 2020 NOPR WRITTEN COMMENTS

Commenter(s)	Reference in this final rule	Commenter type
Air-Conditioning, Heating & Refrigeration Institute	AHRI	Trade Association.
California Investor-Owned Utilities	CA IOUs	Utility.
Northwest Energy Efficiency Alliance	NEEA	Efficiency Organization.
People's Republic of China	PRC	Country Official/Agency.

A parenthetical reference at the end of a comment quotation or paraphrase provides the location of the item in the public record.[11] The comments received and DOE's decisions regarding finalization of the test procedure amendments are discussed in the sections that follow.

A. Scope of Applicability

In this final rule, DOE is amending the test procedure for hot gas defrost unit coolers only.

DOE defines a ''walk-in cooler and walk-in freezer'' as an enclosed storage space refrigerated to temperatures, respectively, above, and at or below 32 degrees Fahrenheit that can be walked into, and has a total chilled storage area of less than 3,000 square feet (excluding products designed and marketed exclusively for medical, scientific, or research purposes). 10 CFR 431.302.

DOE defines a ''unit cooler'' as an assembly, including means for forced air circulation and elements by which heat is transferred from air to refrigerant, thus cooling the air, without any element external to the cooler imposing air resistance. A unit cooler is a ''refrigeration system,'' which DOE defines as the mechanism (including all controls and other components integral to the system's operation) used to create the refrigerated environment in the interior of a walk-in cooler or walk-in freezer, consisting of: (1) A dedicated condensing refrigeration system (as defined in 10 CFR 431.302); or (2) a unit cooler.

DOE has determined that its current test procedure provides results that are not essentially the same for hot gas defrost unit coolers and electric defrost unit coolers, as intended in the December 2016 final rule. As a result, not only might the values from using the procedure's calculations be unrepresentative, but it may not be possible for certain hot gas defrost unit coolers to comply with the applicable energy conservation standards using the current test procedure's default calculations.

B. Calculation of Defrost Energy and Heat Contribution for Hot Gas Defrost Unit Coolers Tested Alone

As discussed in the September 2020 NOPR, certain manufacturers and AHRI informed DOE that the test method for hot gas defrost unit coolers does not provide results that are comparable to the results for electric defrost unit coolers. 85 FR 60724, 60728. As such, hot gas defrost unit coolers above a certain capacity may, when tested under the current procedure, produce unrepresentative values and have difficulty demonstrating compliance with the relevant standards. As discussed, the DOE test procedure determines the AWEF of hot gas defrost unit coolers by using the default electric defrost energy use and heat load values from the test procedure for condensing units tested alone. Appendix C Sections 3.5.2, 3.4.2.4, and 3.4.2.5.

Using the defrost energy and heat load values in the test method prescribed in Appendix C of the current test procedure, Table III.2 compares hypothetical, best-case AWEF values assuming the unit cooler fans draw zero power (an impossible situation) and AWEF values using representative unit cooler fan wattages at different gross capacity levels.[12] These are the same values used to represent electric defrost energy and heat values for determining the AWEF for condensing units tested alone. The zero-fan-watt AWEF levels are higher than would be achieved by max-tech unit coolers, since the calculations were done assuming that the unit cooler fans consume zero energy for illustrative purposes.

Hypothetical AWEF values were calculated as follows. Energy contributions included in the AWEF calculation for this case include compressor energy and defrost energy. The compressor energy is calculated as the unit cooler gross capacity, divided by a compressor system EER value prescribed in Table 17 of AHRI 1250–2009 for low-temperature unit coolers (*i.e.,* EER = 6.7), multiplied by a load factor representing percentage compressor run time. The load factor is equal to the walk-in enclosure thermal load plus the average per-hour defrost heat contribution divided by the unit cooler's net capacity. In this calculation, higher defrost energy and heat load values both reduce AWEF, with a higher AWEF value indicating more efficient performance. For unit coolers above a certain capacity—even for the hypothetical, impossible zero-fan-watt scenario—using the current default defrost energy and heat load values results in a lower AWEF than the current low-temperature unit cooler minimum standard.

[11] The parenthetical reference provides a reference for information located in the docket of DOE's rulemaking to amend the WICF test procedure. (Docket No. EERE–2020–BT–TP–0016, which is maintained at *http://www.regulations.gov/#!docketDetail;D=EERE-2020-BT-TP-0016*). The references are arranged as follows: (Commenter name, comment docket ID number, page of that document).

[12] Gross capacity is the cooling delivered by the refrigerant passing through the unit cooler evaporator. Net capacity or cooling effect is less than this value by an amount equal to the heat of the fans (*i.e.,* fan input power in Watts converted to heat in Btu/h by multiplying by 3.412) used to circulate air through the unit cooler.

TABLE III.2—HOT GAS DEFROST UNIT COOLER AWEF

Gross capacity (Btu/h)	AWEF calculated assuming zero fan power (Btu/W-h)	AWEF calculated using fan power correlations from AHRI 1250–2020 (Btu/W-h) *	Minimum AWEF standard (Btu/W-h) **
10,000	5.08	4.30	4.07
17,500	4.65	4.15	4.15
50,000	4.49	3.83	4.15
100,000	4.21	3.51	4.15
114,300	4.15	3.45	4.15
150,000	4.03	3.35	4.15
200,000	3.91	3.23	4.15

* Equation 173 in section 7.9.3.3. These correlations are representative for low temperature unit cooler evaporator fan power and are used in the test method prescribed in AHRI 1250–2020 for low temperature condensing units tested alone.
** Unit Cooler—Low, 10 CFR 431.306(e).

In April 2020, AHRI published an updated version of its AHRI 1250 test standard that revised the values for electric defrost energy use and heat contribution to apply when testing condensing units that are tested alone (see section C10.2.2 in Appendix C of AHRI 1250–2020). That update was partly based on testing using a sample of unit coolers equipped with electric defrost. Although the updated values specified in AHRI 1250–2020 are expressed as average per-hour contributions rather than daily contributions, they can be converted to daily contributions (by multiplying by 24) for comparison with the current DOE test procedure values. The daily values determined using AHRI 1250–2020 are significantly lower than those in the current DOE test procedure, as indicated in Table III.3.

TABLE III.3—COMPARISON OF UNIT COOLER DEFAULT ELECTRIC DEFROST ENERGY AND HEAT LOAD BETWEEN CURRENT DOE TEST PROCEDURE AND THIS FINAL RULE

Gross capacity (Btu/h)	Daily defrost energy use, DF (Wh) current DOE test procedure *	Daily defrost energy use, DF (Wh) 2020 Final Rule	Daily defrost heat load, Q_{DF} (Btu) current DOE test procedure *	Daily defrost heat load, Q_{DF} (Btu) 2020 Final Rule
10,000	4,088	2,400	13,300	7,800
50,000	31,600	10,400	102,300	33,600
100,000	76,100	18,000	247,000	58,500
150,000	128,000	27,000	413,000	87,600
200,000	184,000	36,000	595,000	117,000

* See Appendix C, Sections 3.4.2.4 and 3.4.2.5. Applicable for hot gas defrost unit coolers as required in Appendix C, Section 3.5.2.

As explained in the September 2020 NOPR, the AHRI 1250–2020 update also includes correlations for the energy use and heat load associated with hot gas defrost. These values were based on the testing of units with hot gas defrost. However, as also explained in the NOPR, DOE proposed to use the correlations developed for electric defrost rather than hot gas defrost, to achieve consistency between the ratings for hot gas and electric defrost unit coolers—which was the intent of the December 2016 Final Rule. *Id.*

DOE proposed to revise the test procedure for hot gas defrost unit coolers by revising the equations used to calculate energy and heat contributions for defrost consistent with those specified in Appendix C, Section C10.2.2 of AHRI 1250–2020.

Comments from AHRI supported DOE's approach to revise its test procedure for hot gas defrost unit coolers (AHRI, No. 6, p. 2). The CA IOUs supported the proposal as a short-term resolution to the issue with hot gas defrost unit coolers, since the current test procedure likely overestimates defrost load, particularly for higher capacity hot gas defrost unit coolers (CA IOUs, No. 4, p. 2).

In its comments, the PRC noted that defrosting using waste heat is more efficient than electric defrost and therefore DOE should not exclude hot gas defrost systems from the scope of the test (PRC, No. 3, p. 3) DOE understands the term ''waste heat,'' in this case, to mean hot gas defrost. DOE wishes to emphasize that it is maintaining the provisions to address hot gas defrost and that hot gas defrost unit coolers continue to be within the scope of Appendix C and required to comply with the relevant standards in 10 CFR 431.306.

NEEA recommended that DOE update the calculations for electric defrost unit coolers to be consistent with AHRI 1250–2020 to maintain consistency between hot gas defrost and electric defrost unit coolers (NEEA, No. 5, p. 5). DOE notes that defrost energy use for unit coolers with electric defrost is determined through testing using section 3.3.4 of Appendix C, which references section C11 of AHRI 1250–2009. As specified in section C11 of AHRI 1250–2009, the electric defrost unit cooler is operated at dry coil conditions until stable, at which point a defrost is initiated and the energy input and duration is measured. Defrost capabilities are built into electric defrost

unit coolers, *e.g.,* a coil heater is integrated into the evaporator coil and a pan heater is provided for the pan. The power source to activate these heaters for a laboratory test is the same power source used to operate the unit cooler fans to measure capacity. Hot gas defrost unit coolers cannot be tested in this way because the heat source necessary to achieve defrost is not incorporated into the equipment. Therefore, while default values are needed for hot gas defrost unit coolers, they are not needed for electric defrost unit coolers, as the energy use associated with the electric defrost is measured in the test method.

DOE received several comments urging it to conduct a more comprehensive rulemaking that fully addresses recommendations from the 2016 Working Group. As noted earlier, the CA IOUs supported the proposed amendments as a short-term measure; however, they encouraged DOE to address more fully the recommendations from the 2015 Working Group in a future rulemaking (CA IOUs, No. 4, p. 2). NEEA also urged DOE to expand the scope of the current walk-in test procedure revisions to address more fully the recommendations from the ASRAC working group, specifically recommendation 6 (NEEA, No. 5, p. 5). Additionally, the PRC suggested that DOE include modifications to the test to improve its ability to evaluate systems that utilize hot gas defrost (PRC, No. 3, p. 3).

DOE notes that Working Group Recommendation No. 6 includes incorporating off-cycle power consumption, rating variable-capacity condensing units, and developing a method for measuring hot gas defrost and adaptive defrost energy consumption. See Docket No. EERE–2015–BT–STD–0016, No. 56 at p. 3 (ASRAC Term Sheet, Recommendation No. 6—Future Test Procedure Recommendations. See also 81 FR 95758, 95761 (discussing ASRAC recommendations). As recognized by NEEA, additional changes to the DOE test procedure in response to Working Group Recommendation No. 6 would necessitate an evaluation of whether any such changes would impact compliance with the energy consumption standards for walk-ins (NEEA, No. 5, p. 3). DOE will continue to evaluate the Working Group recommendations and address additional changes as may be needed in a separate rulemaking.

NEEA encouraged DOE to conduct further analysis into AHRI 1250–2020 to understand if it appropriately addresses the Working Group recommendations. (NEEA, No. 5, p. 3) The CA IOUs commented that the equations in the DOE test procedure should align with the equations in AHRI 1250–2020, especially where a separate equation for electric defrost and hot gas defrost is used. (CA IOUs, No. 4, p. 3) DOE agrees that a full analysis of AHRI 1250–2020 is necessary to both evaluate its consistency with the 2015 Working Group recommendations, and to better understand how updated test requirements may impact the energy conservations standards. However, DOE wishes to emphasize that the purpose of this rule is to revise the test procedure for hot gas defrost unit coolers only and addressing these other issues would be part of a future rulemaking.

Finally, NEEA suggests that DOE consider incorporating a cyclic test procedure for walk-in refrigeration systems (NEEA, No. 5, p. 3). According to NEEA, a test procedure with multiple refrigeration cycles and varying load conditions would more accurately represent the period of use for walk-in refrigeration systems. (NEEA, No. 5, p. 3). DOE appreciates the comment and will consider it in a future test procedure rulemaking, should one be initiated.

As stated in the September 2020 NOPR, DOE limited the scope of the proposal to expediently address how to test a hot gas defrost unit cooler and to resolve potential compliance issues under the energy conservation standards that currently apply. 85 FR 60724, 60724.

DOE has determined that the equations in AHRI 1250–2020 section C10.2.2 provide better representations of electric defrost energy use and heat load than those in the current DOE test procedure (Appendix C, sections 3.4.2.4 and 3.4.2.5) and hence will provide better equivalence of a hot gas defrost unit cooler's performance rating with that of an otherwise similar electric defrost unit cooler, regardless of gross capacity. The default electric defrost energy and heat values in the current DOE test procedure were validated by testing unit coolers with measured gross capacity up to 18,000 Btu/h, representing a more limited range of capacity than the sample tested by AHRI.[13] The default electric defrost energy and heat values provided in AHRI 1250–2020 are based on measuring the performance of a range of unit coolers, some with capacities greater than 18,000 Btu/h. Because of the greater capacity range tested in support of AHRI 1250–2020 development, DOE has determined that these values provide both the best available representation of electric defrost energy consumption associated with unit cooler defrost and better performance equivalence between hot gas defrost and electric defrost unit coolers than Appendix C. Hence, DOE is revising its test procedure for hot gas defrost low-temperature unit coolers to use the AHRI 1250–2020 equations to provide more equivalent test results between electric and hot gas defrost unit coolers.[14]

Based on the discussion presented in this final rule and in the September 2020 NOPR, DOE is modifying its test procedure for hot gas defrost unit coolers to use the defrost energy and heat equations from AHRI 1250–2020 when calculating AWEF.

C. Effective and Compliance Dates

The effective date for the adopted test procedure amendment will be 30 days after publication of this final rule in the **Federal Register**. EPCA prescribes that all representations of energy efficiency and energy use, including those made on marketing materials and product labels, must be made in accordance with an amended test procedure, beginning 180 days after publication of the final rule in the **Federal Register**. (42 U.S.C. 6314(d)(1)) Manufacturers do, however, have the option to use the amended test procedure prior to that time.

EPCA provides that individual manufacturers may petition DOE for an extension of the 180-day period if the manufacturer will experience undue hardship in meeting the deadline. (42 U.S.C. 6314(d)(2)) To receive consideration, petitions must be filed with DOE no later than 60 days before the end of the 180-day period and must detail how the manufacturer will experience undue hardship. (*Id.*)

D. Test Procedure Costs, Harmonization, and Other Topics

1. Test Procedure Costs and Impact

EPCA requires that test procedures adopted by DOE not be unduly burdensome to conduct. In this document, DOE amends the existing test procedure for walk-in hot gas defrost unit coolers tested alone by revising the calculations used to determine daily defrost energy and heat contribution. DOE has determined that the amendment will not add any burden to

[13] See Docket EERE–2015–BT–STD–0016, No. 0007 at p. 31.

[14] DOE has not identified an analogous issue with the use of hot gas defrost default values when testing condensing units tested alone that use hot gas defrost. The condensing unit test procedure requires the same defrost default values that were used to develop the current energy conservation standards.

manufacturers to conduct the test procedure for this equipment since the amendment requires only a mathematical change to the measured results and does not require any additional testing or re-testing on the part of manufacturers.

2. Harmonization With Industry Standards

DOE's established practice is to adopt relevant industry standards as DOE test procedures unless such methodology would be unduly burdensome to conduct or would not produce test results that reflect the energy efficiency, energy use, water use (as specified in EPCA) or estimated operating costs of that product during a representative average use cycle. See 10 CFR 431.4; 10 CFR part 430, subpart C, appendix A, section 8(c). In cases where the industry standard does not meet the relevant statutory criteria, DOE will make needed modifications to these standards through rulemaking to ensure that the test procedure being adopted satisfies these criteria. *Id.*

DOE is adopting the method for determining the energy use attributable to hot gas defrost in unit coolers as detailed in AHRI 1250–2020, which is the updated version of the industry test procedure generally incorporated by reference in Appendix C. To address the determination of AWEF for hot gas defrost unit coolers as discussed in this final rule, DOE is updating the Federal test procedure consistent with AHRI 1250–2020 only in this context. As stated in the September 2020 NOPR, DOE may undertake a separate evaluation of whether amendments to the WICF test procedure are necessary more generally, and would as part of that evaluation, consider whether the existing reference to AHRI 1250–2009 at 10 CFR 431.303 should be updated to the 2020 version.

IV. Procedural Issues and Regulatory Review

A. Review Under Executive Order 12866

The Office of Management and Budget (''OMB'') has determined that this test procedure rulemaking does not constitute ''significant regulatory actions'' under section 3(f) of Executive Order (''E.O.'') 12866, Regulatory Planning and Review, 58 FR 51735 (Oct. 4, 1993). Accordingly, this action was not subject to review under the Executive Order by the Office of Information and Regulatory Affairs (''OIRA'') in OMB.

B. Review Under Executive Orders 13771 and 13777

On January 30, 2017, the President issued E.O. 13771, ''Reducing Regulation and Controlling Regulatory Costs.'' See 82 FR 9339 (Feb. 3, 2017). E.O. 13771 stated the policy of the executive branch is to be prudent and financially responsible in the expenditure of funds, from both public and private sources. E.O. 13771 stated it is essential to manage the costs associated with the governmental imposition of private expenditures required to comply with Federal regulations.

Additionally, on February 24, 2017, the President issued E.O. 13777, ''Enforcing the Regulatory Reform Agenda.'' 82 FR 12285 (March 1, 2017). E.O. 13777 required the head of each agency designate an agency official as its Regulatory Reform Officer (''RRO''). Each RRO oversees the implementation of regulatory reform initiatives and policies to ensure that agencies effectively carry out regulatory reforms, consistent with applicable law. Further, E.O. 13777 requires the establishment of a regulatory task force at each agency. The regulatory task force is required to make recommendations to the agency head regarding the repeal, replacement, or modification of existing regulations, consistent with applicable law. At a minimum, each regulatory reform task force must attempt to identify regulations that:

(i) Eliminate jobs, or inhibit job creation;

(ii) Are outdated, unnecessary, or ineffective;

(iii) Impose costs that exceed benefits;

(iv) Create a serious inconsistency or otherwise interfere with regulatory reform initiatives and policies;

(v) Are inconsistent with the requirements of the Information Quality Act, or the guidance issued pursuant to that Act, in particular those regulations that rely in whole or in part on data, information, or methods that are not publicly available or that are insufficiently transparent to meet the standard for reproducibility; or

(vi) Derive from or implement Executive Orders or other Presidential directives that have been subsequently rescinded or substantially modified.

DOE concludes that this rulemaking is consistent with the directives set forth in these executive orders. This final rule is estimated to have no cost impact. Therefore, this final rule is an E.O. 13771 ''other'' action.

C. Review Under the Regulatory Flexibility Act

The Regulatory Flexibility Act (5 U.S.C. 601 *et seq.*) requires preparation of a final regulatory flexibility analysis (''FRFA'') for any final rule where the agency was first required by law to publish a proposed rule for public comment, unless the agency certifies that the rule, if promulgated, will not have a significant economic impact on a substantial number of small entities. As required by Executive Order 13272, ''Proper Consideration of Small Entities in Agency Rulemaking,'' 67 FR 53461 (August 16, 2002), DOE published procedures and policies on February 19, 2003 to ensure that the potential impacts of its rules on small entities are properly considered during the DOE rulemaking process. 68 FR 7990. DOE has made its procedures and policies available on the Office of the General Counsel's website: *http://energy.gov/gc/office-general-counsel.*

As presented in this final rule, the adopted change to the test procedure will have no cost impact. As discussed, the final rule requires use of a revised calculation to determine the AWEF for hot gas defrost unit coolers. The adopted amendment does not require additional testing or retesting.

Therefore, DOE concludes that the cost effects accruing from the final rule would not have a ''significant economic impact on a substantial number of small entities,'' and that the preparation of a FRFA is not warranted. DOE has submitted a certification and supporting statement of factual basis to the Chief Counsel for Advocacy of the Small Business Administration for review under 5 U.S.C. 605(b).

D. Review Under the Paperwork Reduction Act of 1995

Manufacturers of walk-in coolers and walk-in freezers must certify to DOE that their products comply with any applicable energy conservation standards. To certify compliance, manufacturers must first obtain test data for their products according to the DOE test procedures, including any amendments adopted for those test procedures. DOE has established regulations for the certification and recordkeeping requirements for all covered consumer products and commercial equipment, including walk-ins. (See generally 10 CFR part 429.) The collection-of-information requirement for the certification and recordkeeping is subject to review and approval by OMB under the Paperwork Reduction Act (''PRA''). This requirement has been approved by OMB

under OMB control number 1910–1400. Public reporting burden for the certification is estimated to average 35 hours per response, including the time for reviewing instructions, searching existing data sources, gathering and maintaining the data needed, and completing and reviewing the collection of information.

Notwithstanding any other provision of the law, no person is required to respond to, nor shall any person be subject to a penalty for failure to comply with, a collection of information subject to the requirements of the PRA, unless that collection of information displays a currently valid OMB Control Number.

The amendment adopted in this final rule does not impact the reporting burden for manufacturers of WICFs.

E. Review Under the National Environmental Policy Act of 1969

Pursuant to the National Environmental Policy Act of 1969 (''NEPA''), DOE has analyzed this proposed action in accordance with NEPA and DOE's NEPA implementing regulations (10 CFR part 1021). DOE has determined that this rule qualifies for categorical exclusion under 10 CFR part 1021, subpart D, Appendix A5 because it is an interpretive rulemaking that does not change the environmental effect of the rule and meets the requirements for application of a CX. See 10 CFR 1021.410. Therefore, DOE has determined that promulgation of this rule is not a major Federal action significantly affecting the quality of the human environment within the meaning of NEPA and does not require an EA or EIS.

F. Review Under Executive Order 13132

Executive Order 13132, ''Federalism,'' 64 FR 43255 (August 4, 1999), imposes certain requirements on agencies formulating and implementing policies or regulations that preempt State law or that have Federalism implications. The Executive Order requires agencies to examine the constitutional and statutory authority supporting any action that would limit the policymaking discretion of the States and to carefully assess the necessity for such actions. The Executive Order also requires agencies to have an accountable process to ensure meaningful and timely input by State and local officials in the development of regulatory policies that have Federalism implications. On March 14, 2000, DOE published a statement of policy describing the intergovernmental consultation process it will follow in the development of such regulations. 65 FR 13735. DOE examined this final rule and determined that it will not have a substantial direct effect on the States, on the relationship between the national government and the States, or on the distribution of power and responsibilities among the various levels of government. EPCA governs and prescribes Federal preemption of State regulations as to energy conservation for the products that are the subject of this final rule. States can petition DOE for exemption from such preemption to the extent, and based on criteria, set forth in EPCA. (42 U.S.C. 6297(d)) No further action is required by Executive Order 13132.

G. Review Under Executive Order 12988

Regarding the review of existing regulations and the promulgation of new regulations, section 3(a) of Executive Order 12988, ''Civil Justice Reform,'' 61 FR 4729 (Feb. 7, 1996), imposes on Federal agencies the general duty to adhere to the following requirements: (1) Eliminate drafting errors and ambiguity; (2) write regulations to minimize litigation; (3) provide a clear legal standard for affected conduct rather than a general standard; and (4) promote simplification and burden reduction. Section 3(b) of Executive Order 12988 specifically requires that Executive agencies make every reasonable effort to ensure that the regulation (1) clearly specifies the preemptive effect, if any; (2) clearly specifies any effect on existing Federal law or regulation; (3) provides a clear legal standard for affected conduct while promoting simplification and burden reduction; (4) specifies the retroactive effect, if any; (5) adequately defines key terms; and (6) addresses other important issues affecting clarity and general draftsmanship under any guidelines issued by the Attorney General. Section 3(c) of Executive Order 12988 requires Executive agencies to review regulations in light of applicable standards in sections 3(a) and 3(b) to determine whether they are met or it is unreasonable to meet one or more of them. DOE has completed the required review and determined that, to the extent permitted by law, this final rule meets the relevant standards of Executive Order 12988.

H. Review Under the Unfunded Mandates Reform Act of 1995

Title II of the Unfunded Mandates Reform Act of 1995 (''UMRA'') requires each Federal agency to assess the effects of Federal regulatory actions on State, local, and Tribal governments and the private sector. Public Law 104–4, sec. 201 (codified at 2 U.S.C. 1531). For a regulatory action resulting in a rule that may cause the expenditure by State, local, and Tribal governments, in the aggregate, or by the private sector of $100 million or more in any one year (adjusted annually for inflation), section 202 of UMRA requires a Federal agency to publish a written statement that estimates the resulting costs, benefits, and other effects on the national economy. (2 U.S.C. 1532(a), (b)) The UMRA also requires a Federal agency to develop an effective process to permit timely input by elected officers of State, local, and Tribal governments on a proposed ''significant intergovernmental mandate,'' and requires an agency plan for giving notice and opportunity for timely input to potentially affected small governments before establishing any requirements that might significantly or uniquely affect small governments. On March 18, 1997, DOE published a statement of policy on its process for intergovernmental consultation under UMRA. 62 FR 12820; also available at *http://energy.gov/gc/office-general-counsel.* DOE examined this final rule according to the UMRA and its statement of policy and determined that the rule contains neither an intergovernmental mandate, nor a mandate that may result in the expenditure of $100 million or more in any year, so these requirements do not apply.

I. Review Under the Treasury and General Government Appropriations Act, 1999

Section 654 of the Treasury and General Government Appropriations Act, 1999 (Pub. L. 105–277) requires Federal agencies to issue a Family Policymaking Assessment for any rule that may affect family well-being. This final rule will not have any impact on the autonomy or integrity of the family as an institution. Accordingly, DOE has concluded that it is not necessary to prepare a Family Policymaking Assessment.

J. Review Under Executive Order 12630

DOE has determined, under Executive Order 12630, ''Governmental Actions and Interference with Constitutionally Protected Property Rights'' 53 FR 8859 (March 18, 1988), that this regulation will not result in any takings that might require compensation under the Fifth Amendment to the U.S. Constitution.

K. Review Under Treasury and General Government Appropriations Act, 2001

Section 515 of the Treasury and General Government Appropriations Act, 2001 (44 U.S.C. 3516 note) provides for agencies to review most disseminations of information to the public under guidelines established by

each agency pursuant to general guidelines issued by OMB. OMB's guidelines were published at 67 FR 8452 (Feb. 22, 2002). Pursuant to OMB Memorandum M–19–15, Improving Implementation of the Information Quality Act (April 24, 2019), DOE published updated guidelines which are available at *https://www.energy.gov/sites/prod/files/2019/12/f70/DOE%20Final%20Updated%20IQA%20Guidelines%20Dec%202019.pdf.* DOE has reviewed this final rule under the OMB and DOE guidelines and has concluded that it is consistent with applicable policies in those guidelines.

L. Review Under Executive Order 13211

Executive Order 13211, ''Actions Concerning Regulations That Significantly Affect Energy Supply, Distribution, or Use,'' 66 FR 28355 (May 22, 2001), requires Federal agencies to prepare and submit to OMB, a Statement of Energy Effects for any significant energy action. A ''significant energy action'' is defined as any action by an agency that promulgated or is expected to lead to promulgation of a final rule, and that (1) is a significant regulatory action under Executive Order 12866, or any successor order; and (2) is likely to have a significant adverse effect on the supply, distribution, or use of energy; or (3) is designated by the Administrator of OIRA as a significant energy action. For any significant energy action, the agency must give a detailed statement of any adverse effects on energy supply, distribution, or use if the regulation is implemented, and of reasonable alternatives to the action and their expected benefits on energy supply, distribution, and use.

This regulatory action is not a significant regulatory action under Executive Order 12866. Moreover, it would not have a significant adverse effect on the supply, distribution, or use of energy, nor has it been designated as a significant energy action by the Administrator of OIRA. Therefore, it is not a significant energy action, and, accordingly, DOE has not prepared a Statement of Energy Effects.

M. Review Under Section 32 of the Federal Energy Administration Act of 1974

Under section 301 of the Department of Energy Organization Act (Pub. L. 95–91; 42 U.S.C. 7101), DOE must comply with section 32 of the Federal Energy Administration Act of 1974, as amended by the Federal Energy Administration Authorization Act of 1977. (15 U.S.C. 788; ''FEAA'') Section 32 essentially provides in relevant part that, where a proposed rule authorizes or requires use of commercial standards, the notice of proposed rulemaking must inform the public of the use and background of such standards. In addition, section 32(c) requires DOE to consult with the Attorney General and the Chairman of the Federal Trade Commission (''FTC'') concerning the impact of the commercial or industry standards on competition.

The amendment to the test procedures for walk-ins adopted in this final rule does not incorporate any new industry standard that would require compliance under section 32(b) of the FEAA. The amendment adopted in this final rule is based on calculations specified in AHRI 1250–2020, but the regulation as amended does not require the use of AHRI 1250–2020. Nevertheless, DOE consulted with both the Department of Justice and the FTC on the proposed rule. Neither agency had comments or concerns regarding the rulemaking.

N. Congressional Notification

As required by 5 U.S.C. 801, DOE will report to Congress on the promulgation of this rule before its effective date. The report will state that it has been determined that the rule is not a ''major rule'' as defined by 5 U.S.C. 804(2).

V. Approval of the Office of the Secretary

The Secretary of Energy has approved publication of this final rule.

List of Subjects in 10 CFR Part 431

Administrative practice and procedure, Confidential business information, Energy conservation test procedures, and Reporting and recordkeeping requirements.

Signing Authority

This document of the Department of Energy was signed on March 7, 2021, by Kelly Speakes-Backman, Principal Deputy Assistant Secretary and Acting Assistant Secretary for Energy Efficiency and Renewable Energy, pursuant to delegated authority from the Secretary of Energy. That document with the original signature and date is maintained by DOE. For administrative purposes only, and in compliance with requirements of the Office of the Federal Register, the undersigned DOE Federal Register Liaison Officer has been authorized to sign and submit the document in electronic format for publication, as an official document of the Department of Energy. This administrative process in no way alters the legal effect of this document upon publication in the **Federal Register**.

Signed in Washington, DC, on March 11, 2021.

Treena V. Garrett,

Federal Register Liaison Officer, U.S. Department of Energy.

For the reasons stated in the preamble, DOE amends part 431 of chapter II of title 10, Code of Federal Regulations as set forth below:

PART 431—ENERGY EFFICIENCY PROGRAM FOR CERTAIN COMMERCIAL AND INDUSTRIAL EQUIPMENT

■ 1. The authority citation for part 431 continues to read as follows:

Authority: 42 U.S.C. 6291–6317; 28 U.S.C. 2461 note.

■ 2. Appendix C to subpart R of part 431 is amended by revising section 3.5.2 and adding section 3.5.3 to read as follows:

Appendix C to Subpart R of Part 431—Uniform Test Method for the Measurement of Net Capacity and AWEF of Walk-In Cooler and Walk-In Freezer Refrigeration Systems

* * * * *

3.5 * * *

3.5.2 Hot Gas Defrost Matched Systems and Single-package Dedicated Systems: Test these units as described in section 3.3 of this appendix for electric defrost matched systems and single-package dedicated systems, but do not conduct defrost tests as described in sections 3.3.4 and 3.3.5 of this appendix. Calculate daily defrost energy use as described in section 3.4.2.4 of this appendix. Calculate daily defrost heat contribution as described in section 3.4.2.5 of this appendix.

3.5.3 Hot Gas Defrost Unit Coolers Tested Alone: Test these units as described in section 3.3 of this appendix for electric defrost unit coolers tested alone, but do not conduct defrost tests as described in sections 3.3.4 and 3.3.5 of this appendix. Calculate average defrost heat load $\dot{Q}_{DF}$, expressed in Btu/h, as follows:

BILLING CODE 6450–01–P

If $\dot{Q}_{gross} \leq 25{,}000$ Btu/h:

$$\dot{Q}_{DF} = 0.195 \times \dot{Q}_{gross} \times \frac{N_{DF}}{24}$$

If $\dot{Q}_{gross} > 25{,}000$ Btu/h and $\dot{Q}_{gross} \leq 70{,}000$ Btu/h:

$$\dot{Q}_{DF} = \dot{Q}_{gross} \times \left[0.195 - \frac{0.049 \times (\dot{Q}gross - 25{,}000)}{45{,}000}\right] \times \frac{N_{DF}}{24}$$

If $\dot{Q}_{gross} > 70{,}000$ Btu/h:

$$\dot{Q}_{DF} = 0.146 \times \dot{Q}_{gross} \times \frac{N_{DF}}{24}$$

Where:

$\dot{Q}_{gross}$ is the measured gross capacity in Btu/h at the Suction A condition; and

N_{DF} is the number of defrosts per day, equal to 4.

Calculate average defrost power input $\dot{DF}$, expressed in Watts, as follows:

$$\dot{DF} = \frac{\dot{Q}_{DF}}{0.95 \times 3.412}$$

Where:

$\dot{Q}_{DF}$ is the average defrost heat load in Btu/h

[FR Doc. 2021–05414 Filed 3–25–21; 8:45 am]
BILLING CODE 6450–01–C

DEPARTMENT OF TRANSPORTATION

Federal Aviation Administration

14 CFR Part 25

[Docket No. FAA–2020–0720; Special Conditions No. 25–786–SC]

Special Conditions: The Boeing Company Model 787 Series Airplane; Seats With Pretensioner Restraint Systems

AGENCY: Federal Aviation Administration (FAA), DOT.

ACTION: Final special conditions.

SUMMARY: These special conditions are issued for The Boeing Company (Boeing) Model 787 series airplane. This airplane will have a novel or unusual design feature when compared to the state of technology envisioned in the airworthiness standards for transport category airplanes. This design feature is pretensioner restraint systems installed on passenger seats. The applicable airworthiness regulations do not contain adequate or appropriate safety standards for this design feature. These special conditions contain the additional safety standards that the Administrator considers necessary to establish a level of safety equivalent to that established by the existing airworthiness standards.

DATES: Effective April 26, 2021.

FOR FURTHER INFORMATION CONTACT: Shannon Lennon, Human-Machine Interface Section, AIR–626, Technical Innovation Policy Branch, Policy and Innovation Division, Aircraft Certification Service, Federal Aviation Administration, 2200 South 216th Street, Des Moines, Washington 98198; telephone and fax 206–231–3209; email *shannon.lennon@faa.gov.*

SUPPLEMENTARY INFORMATION:

Background

On November 8, 2018, Boeing applied for a change to Type Certificate No. T00021SE for pretensioner restraint systems installed on passenger seats in the Model 787 series airplane. This airplane is a twin-engine, transport-category airplane with passenger seating capacity of 420 and a maximum takeoff weight of 557,000 pounds.

Type Certification Basis

Under the provisions of title 14, Code of Federal Regulations (14 CFR) 21.101, Boeing must show that the Model 787 series airplane, as changed, continues to meet the applicable provisions of the regulations listed in Type Certificate No. T00021SE or the applicable regulations in effect on the date of application for the change, except for earlier amendments as agreed upon by the FAA.

If the Administrator finds that the applicable airworthiness regulations (*e.g.,* 14 CFR part 25) do not contain adequate or appropriate safety standards for Boeing Model 787 series airplane because of a novel or unusual design feature, special conditions are prescribed under the provisions of § 21.16.

Special conditions are initially applicable to the model for which they are issued. Should the type certificate for that model be amended later to include any other model that incorporates the same novel or unusual design feature, or should any other model already included on the same type certificate be modified to incorporate the same novel or unusual design feature, these special conditions would also apply to the other model under § 21.101.

In addition to the applicable airworthiness regulations and special conditions, the Boeing Model 787 series airplane must comply with the fuel-vent and exhaust-emission requirements of 14 CFR part 34, and the noise certification requirements of 14 CFR part 36.

The FAA issues special conditions, as defined in 14 CFR 11.19, in accordance with § 11.38, and they become part of the type certification basis under § 21.101.

Novel or Unusual Design Features

The Boeing Model 787 series airplane will incorporate the following novel or unusual design features:

Forward-facing seats incorporating a shoulder harness with pretensioner device, otherwise known as a pretensioner restraint system, which is intended to protect the occupants from head injuries.

Discussion

Boeing will install, in the Model 787 series airplane, forward-facing seats that incorporate a shoulder harness with a pretensioner system at each seat place for head-injury protection.

Shoulder harnesses have been widely used on flight-attendant seats, flight-deck seats, in business jets, and in general-aviation airplanes to reduce occupant head injury in the event of an emergency landing. Special conditions, pertinent regulations, and published guidance exist that relate to other restraint systems. However, the use of pretensioners in the restraint system on transport-airplane seats is a novel design.

The pretensioner restraint system utilizes a retractor which eliminates slack in the shoulder harness and pulls the occupant back into the seat prior to impact. This has the effect of reducing forward translation of the occupant, reducing head arc, and reducing the loads in the shoulder harness.

Pretensioner technology involves a step-change in loading experienced by the occupant for impacts below and above that at which the device deploys, because activation of the shoulder harness, at the point at which the pretensioner engages, interrupts upper-torso excursion. This could result in the head injury criteria (HIC) being higher at an intermediate impact condition than that resulting from the maximum impact condition corresponding to the test conditions specified in § 25.562. See condition 1 in these special conditions.

The ideal triangular maximum-severity pulse is defined in Advisory Circular (AC) 25.562–1B, ''Dynamic Evaluation of Seat Restraint Systems and Occupant Protection on Transport Airplanes.'' For the evaluation and testing of less-severe pulses for purposes of assessing the effectiveness of the pretensioner setting, a similar triangular pulse should be used with acceleration, rise time, and velocity change scaled accordingly. The magnitude of the required pulse should not deviate below the ideal pulse by more than 0.5g until 1.33 t1 is reached, where t1 represents the time interval between 0 and t1 on the referenced pulse shape as shown in AC 25.562–1B. This is an acceptable method of compliance to the test requirements of the special conditions.

Additionally, the pretensioner might not provide protection, after actuation, during secondary impacts. Therefore, the case where a small impact is followed by a large impact should be addressed. If the minimum deceleration severity at which the pretensioner is set to deploy is unnecessarily low, the protection offered by the pretensioner may be lost by the time a second, larger impact occurs.

Conditions 1 through 4 ensure that the pretensioner system activates when intended, to provide the necessary protection of occupants. This includes protection of a range of occupants under various accident conditions. Conditions 5 through 10 address maintenance and reliability of the pretensioner system, including any outside influences on the mechanism, to ensure it functions as intended.

The special conditions contain the additional safety standards that the Administrator considers necessary to establish a level of safety equivalent to that established by the existing airworthiness standards.

Discussion of Comments

The FAA issued Notice of Proposed Special Conditions No. 25–20–08–SC for the Boeing Model 787 series airplane, which was published in the **Federal Register** on October 30, 2020 (85 FR 68801). No comments were received, and the special conditions are adopted as proposed.

Applicability

As discussed above, these special conditions are applicable to the Boeing Model 787 series airplane. Should Boeing apply at a later date for a change to the type certificate to include another model incorporating the same novel or unusual design feature, these special conditions would apply to that model as well.

Conclusion

This action affects only a certain novel or unusual design feature on one model series of airplane. It is not a rule of general applicability.

List of Subjects in 14 CFR Part 25

Aircraft, Aviation safety, Reporting and recordkeeping requirements.

Authority Citation

The authority citation for these special conditions is as follows:

Authority: 49 U.S.C. 106(f), 106(g), 40113, 44701, 44702, 44704.

The Special Conditions

■ Accordingly, pursuant to the authority delegated to me by the Administrator, the following special conditions are issued as part of the type certification basis for the Boeing Model 787 series airplane.

In addition to the requirements of § 25.562, forward-facing passenger seats with pretensioner restraint systems must meet the following:

1. Head Injury Criteria (HIC)

The HIC value must not exceed 1000 at any condition at which the pretensioner does or does not deploy, up to the maximum severity pulse that corresponds to the test conditions specified in § 25.562. Tests must be performed to demonstrate this, taking into account any necessary tolerances for deployment.

When an airbag device is present in addition to the pretensioner restraint system, and the anthropomorphic test device (ATD) has no apparent contact with the seat/structure but has contact with an airbag, a HIC unlimited scored in excess of 1000 is acceptable, provided the HIC15 score (calculated in accordance with 49 CFR 571.208) for that contact is less than 700.

ATD head contact with the seat or other structure, through the airbag, or contact subsequent to contact with the airbag, requires a HIC value that does not exceed 1000.

2. Protection During Secondary Impacts

The pretensioner activation setting must be demonstrated to maximize the probability of the protection being available when needed, considering secondary impacts.

3. Protection of Occupants Other Than 50th Percentile

Protection of occupants for a range of stature from a 2-year-old child to a 95th percentile male must be shown. For shoulder harnesses that include pretensioners, protection of occupants other than a 50th percentile male may be shown by test or analysis. In addition, the pretensioner must not introduce a hazard to passengers due to the following seating configurations:

a. The seat occupant is holding an infant.

b. The seat occupant is a child in a child-restraint device.

c. The seat occupant is a pregnant woman.

4. Occupants Adopting the Brace Position

Occupants in the traditional brace position when the pretensioner activates must not experience adverse effects from the pretensioner activation.

5. Inadvertent Pretensioner Actuation

a. The probability of inadvertent pretensioner actuation must be shown to be extremely remote (*i.e.,* average probability per flight hour of less than 10^{-7}).

b. The system must be shown to be not susceptible to inadvertent pretensioner actuation as a result of wear and tear, nor inertia loads resulting from in-flight or ground maneuvers likely to be experienced in service.

c. The seated occupant must not be seriously injured as a result of inadvertent pretensioner actuation.

d. Inadvertent pretensioner actuation must not cause a hazard to the airplane, nor cause serious injury to anyone who may be positioned close to the retractor or belt (*e.g.,* seated in an adjacent seat or standing adjacent to the seat).

6. Availability of the Pretensioner Function Prior to Flight

The design must provide means for a crewmember to verify the availability of the pretensioner function prior to each flight, or the probability of failure of the pretensioner function must be demonstrated to be extremely remote (*i.e.,* average probability per flight hour of less than 10^{-7}) between inspection intervals.

7. Incorrect Seat Belt Orientation

The system design must ensure that any incorrect orientation (twisting) of the seat belt does not compromise the pretensioner protection function.

8. Contamination Protection

The pretensioner mechanisms and controls must be protected from external contamination associated with that which could occur on or around passenger seating.

9. Prevention of Hazards

The pretensioner system must not induce a hazard to passengers in case of fire, nor create a fire hazard, if activated.

10. Functionality After Loss of Power

The system must function properly after loss of normal airplane electrical power, and after a transverse separation in the fuselage at the most critical location. A separation at the location of the system does not have to be considered.

Issued in Kansas City, Missouri, on March 17, 2021.

Patrick R. Mullen,

Manager, Technical Innovation Policy Branch, Policy and Innovation Division, Aircraft Certification Service.

[FR Doc. 2021–06028 Filed 3–25–21; 8:45 am]

BILLING CODE 4910–13–P

DEPARTMENT OF TRANSPORTATION

Federal Aviation Administration

14 CFR Part 39

[Docket No. FAA–2020–0846; Project Identifier MCAI–2020–00806–T; Amendment 39–21411; AD 2021–03–08]

RIN 2120–AA64

Airworthiness Directives; Airbus SAS Airplanes

AGENCY: Federal Aviation Administration (FAA), Department of Transportation (DOT).

ACTION: Final rule.

SUMMARY: The FAA is adopting a new airworthiness directive (AD) for certain

Airbus SAS Model A350–941 and –1041 airplanes. This AD was prompted by reports of migration of the bushings of the horizontal tail plane (HTP) lateral load fittings (LLFs) on the left- and right-hand sides during flight test. This AD requires repetitive inspections for migration of the bushings of the HTP LLFs on the left- and right-hand sides, and terminating repair or modification of any affected bushing, as specified in a European Union Aviation Safety Agency (EASA) AD, which is incorporated by reference. The FAA is issuing this AD to address the unsafe condition on these products.

DATES: This AD is effective April 30, 2021.

The Director of the Federal Register approved the incorporation by reference of a certain publication listed in this AD as of April 30, 2021.

ADDRESSES: For material incorporated by reference (IBR) in this AD, contact the EASA, Konrad-Adenauer-Ufer 3, 50668 Cologne, Germany; telephone +49 221 8999 000; email *ADs@easa.europa.eu;* internet *www.easa.europa.eu.* You may find this IBR material on the EASA website at *https://ad.easa.europa.eu.* You may view this IBR material at the FAA, Airworthiness Products Section, Operational Safety Branch, 2200 South 216th St., Des Moines, WA. For information on the availability of this material at the FAA, call 206–231–3195. It is also available in the AD docket on the internet at *https://www.regulations.gov* by searching for and locating Docket No. FAA–2020–0846.

Examining the AD Docket

You may examine the AD docket on the internet at *https://www.regulations.gov* by searching for and locating Docket No. FAA–2020–0846; or in person at Docket Operations between 9 a.m. and 5 p.m., Monday through Friday, except Federal holidays. The AD docket contains this final rule, any comments received, and other information. The address for Docket Operations is U.S. Department of Transportation, Docket Operations, M–30, West Building Ground Floor, Room W12–140, 1200 New Jersey Avenue SE, Washington, DC 20590.

FOR FURTHER INFORMATION CONTACT: Kathleen Arrigotti, Aerospace Engineer, Large Aircraft Section, International Validation Branch, FAA, 2200 South 216th St., Des Moines, WA 98198; telephone and fax 206–231–3218; email *kathleen.arrigotti@faa.gov.*

SUPPLEMENTARY INFORMATION:

Discussion

The EASA, which is the Technical Agent for the Member States of the European Union, has issued EASA AD 2020–0139R1, dated July 3, 2020 (EASA AD 2020–0139R1) (also referred to as the Mandatory Continuing Airworthiness Information, or ''the MCAI''), to correct an unsafe condition for certain Airbus SAS Model A350–941 and –1041 airplanes.

The FAA issued a notice of proposed rulemaking (NPRM) to amend 14 CFR part 39 by adding an AD that would apply to certain Airbus SAS Model A350–941 and –1041 airplanes. The NPRM published in the **Federal Register** on September 22, 2020 (85 FR 59460). The NPRM was prompted by reports of migration of the bushings of the HTP LLFs on the left- and right-hand sides during flight test. The NPRM proposed to require repetitive inspections for migration of the bushings of the HTP LLFs on the left- and right-hand sides, and terminating repair or modification of any affected bushing, as specified in an EASA AD.

The FAA is issuing this AD to address combined corrosion and fatigue damage of the primary structure, possibly resulting in failure of an HTP LLF and damage to adjacent structure, which could result in reduced controllability of the airplane. See the MCAI for additional background information.

Comments

The FAA gave the public the opportunity to participate in developing this final rule. The following presents the comment received on the NPRM and the FAA's response to the comment.

Request To Clarify Inspection Intervals

The Air Line Pilots Association, International (ALPA) asked that justification be provided for the inspection intervals differing between aircraft variants. ALPA supports the basis of the AD, but stated that due to the similarities between the affected aircraft and the associated safety issue, the time frames should either be consistent between affected aircraft, or a rationale should be provided describing why different compliance time frames are adequate. ALPA noted that the proposed AD adopts the required compliance time frames in EASA AD 2020–0139R1, which require the inspections to be completed at an interval of 6 years for Model A350–941 airplanes, and at intervals of 5,500 flight cycles, 22,900 flight hours, or 6 years, whichever occurs first, for Model A350–1041 airplanes.

The FAA agrees with the commenter that clarification is necessary. The inspection intervals are different because although both Model A350–941 and Model A350–1041 airplanes are affected by corrosion damage of this primary structure, only Model A350–1041 airplanes are suspected to be at risk of fatigue damage to the affected area as well. Therefore, the FAA has not changed this AD in this regard.

Clarification of Terminology

The FAA has added paragraph (h)(3) to this AD to clarify the definition of ''deficiencies,'' which is used in EASA AD 2020–0139R1 but is not referred to in the service information referenced in EASA AD 2020–0139R1.

Conclusion

The FAA reviewed the relevant data, considered the comment received, and determined that air safety and the public interest require adopting this final rule with the change described previously and minor editorial changes. The FAA has determined that these minor changes:

- Are consistent with the intent that was proposed in the NPRM for addressing the unsafe condition; and
- Do not add any additional burden upon the public than was already proposed in the NPRM.

The FAA also determined that these changes will not increase the economic burden on any operator or increase the scope of this final rule.

Related Service Information Under 1 CFR Part 51

EASA AD 2020–0139R1 describes procedures for repetitive detailed inspections for deficiencies (*e.g.,* broken sealant and migration) of the bushings of the HTP LLF on the left- and right-hand sides; and repair or modification of any affected bushing, which eliminates the need for the repetitive inspections. This material is reasonably available because the interested parties have access to it through their normal course of business or by the means identified in the **ADDRESSES** section.

Costs of Compliance

The FAA estimates that this AD affects 13 airplanes of U.S. registry. The FAA estimates the following costs to comply with this AD:

ESTIMATED COSTS FOR REQUIRED ACTIONS

Labor cost	Parts cost	Cost per product	Cost on U.S. operators
10 work-hours × $85 per hour = $850	$0	$850	$11,050 per inspection cycle.

The FAA estimates that it takes about 1 work-hour per product to comply with the reporting requirement in this AD. The average labor rate is $85 per hour. Based on these figures, the FAA estimates the cost of reporting the inspection results on U.S. operators to be $1,105, or $85 per product.

ESTIMATED COSTS FOR OPTIONAL ACTIONS

Labor cost	Parts cost	Cost per product
Up to 38 work-hours × $85 per hour = Up to $3,230	$0	Up to $3,230.

Paperwork Reduction Act

A federal agency may not conduct or sponsor, and a person is not required to respond to, nor shall a person be subject to penalty for failure to comply with a collection of information subject to the requirements of the Paperwork Reduction Act unless that collection of information displays a current valid OMB control number. The control number for the collection of information required by this AD is 2120–0056. The paperwork cost associated with this AD has been detailed in the Costs of Compliance section of this document and includes time for reviewing instructions, as well as completing and reviewing the collection of information. Therefore, all reporting associated with this AD is mandatory. Comments concerning the accuracy of this burden and suggestions for reducing the burden should be directed to Information Collection Clearance Officer, Federal Aviation Administration, 10101 Hillwood Parkway, Fort Worth, TX 76177–1524.

Authority for This Rulemaking

Title 49 of the United States Code specifies the FAA's authority to issue rules on aviation safety. Subtitle I, section 106, describes the authority of the FAA Administrator. Subtitle VII: Aviation Programs, describes in more detail the scope of the Agency's authority.

The FAA is issuing this rulemaking under the authority described in Subtitle VII, Part A, Subpart III, Section 44701: General requirements. Under that section, Congress charges the FAA with promoting safe flight of civil aircraft in air commerce by prescribing regulations for practices, methods, and procedures the Administrator finds necessary for safety in air commerce. This regulation is within the scope of that authority because it addresses an unsafe condition that is likely to exist or develop on products identified in this rulemaking action.

Regulatory Findings

This AD will not have federalism implications under Executive Order 13132. This AD will not have a substantial direct effect on the States, on the relationship between the national government and the States, or on the distribution of power and responsibilities among the various levels of government.

For the reasons discussed above, I certify that this AD:

(1) Is not a ''significant regulatory action'' under Executive Order 12866,

(2) Will not affect intrastate aviation in Alaska, and

(3) Will not have a significant economic impact, positive or negative, on a substantial number of small entities under the criteria of the Regulatory Flexibility Act.

List of Subjects in 14 CFR Part 39

Air transportation, Aircraft, Aviation safety, Incorporation by reference, Safety.

Adoption of the Amendment

Accordingly, under the authority delegated to me by the Administrator, the FAA amends 14 CFR part 39 as follows:

PART 39—AIRWORTHINESS DIRECTIVES

■ 1. The authority citation for part 39 continues to read as follows:

Authority: 49 U.S.C. 106(g), 40113, 44701.

§ 39.13 [Amended]

■ 2. The FAA amends § 39.13 by adding the following new airworthiness directive:

2021–03–08 Airbus SAS: Amendment 39–21411; Docket No. FAA–2020–0846; Project Identifier MCAI–2020–00806–T.

(a) Effective Date

This airworthiness directive (AD) is effective April 30, 2021.

(b) Affected ADs

None

(c) Applicability

This AD applies to Airbus SAS Model A350–941 and –1041 airplanes, certificated in any category, as identified in European Union Aviation Safety Agency (EASA) AD 2020–0139R1, dated July 3, 2020 (EASA AD 2020–0139R1).

(d) Subject

Air Transport Association (ATA) of America Code 55, Stabilizers.

(e) Reason

This AD was prompted by reports of migration of the bushings of the horizontal tail plane (HTP) lateral load fittings (LLFs) on the left- and right-hand sides during flight test. The FAA is issuing this AD to address combined corrosion and fatigue damage of the primary structure, possibly resulting in failure of an HTP LLF and damage to adjacent structure, which could result in reduced controllability of the airplane.

(f) Compliance

Comply with this AD within the compliance times specified, unless already done.

(g) Requirements

Except as specified in paragraph (h) of this AD: Comply with all required actions and compliance times specified in, and in accordance with, EASA AD 2020–0139R1.

(h) Exceptions to EASA AD 2020–0139R1

(1) The ''Remarks'' section of EASA AD 2020–0139R1 does not apply to this AD.

(2) Paragraph (6) of EASA AD 2020–0139R1 specifies to report inspection results to Airbus within a certain compliance time. For this AD, report inspection results at the applicable time specified in paragraph (h)(2)(i) or (ii) of this AD.

(i) If the inspection was done on or after the effective date of this AD: Submit the report within 90 days after the inspection.

(ii) If the inspection was done before the effective date of this AD: Submit the report

within 90 days after the effective date of this AD.

(3) Where paragraph (2) of EASA AD 2020–0139R1 refers to ''deficiencies,'' for this AD, deficiencies include broken sealant and bush migration.

(i) Other FAA AD Provisions

The following provisions also apply to this AD:

(1) *Alternative Methods of Compliance (AMOCs):* The Manager, Large Aircraft Section, International Validation Branch, FAA, has the authority to approve AMOCs for this AD, if requested using the procedures found in 14 CFR 39.19. In accordance with 14 CFR 39.19, send your request to your principal inspector or local Flight Standards District Office, as appropriate. If sending information directly to the Large Aircraft Section, International Validation Branch, send it to the attention of the person identified in paragraph (j) of this AD. Information may be emailed to: *9-AVS-AIR-730-AMOC@faa.gov.* Before using any approved AMOC, notify your appropriate principal inspector, or lacking a principal inspector, the manager of the local flight standards district office/certificate holding district office.

(2) *Contacting the Manufacturer:* For any requirement in this AD to obtain instructions from a manufacturer, the instructions must be accomplished using a method approved by the Manager, Large Aircraft Section, International Validation Branch, FAA; or EASA; or Airbus SAS's EASA Design Organization Approval (DOA). If approved by the DOA, the approval must include the DOA-authorized signature.

(3) *Required for Compliance (RC):* For any service information referenced in EASA AD 2020–0139R1 that contains RC procedures and tests: Except as required by paragraph (i)(2) of this AD, RC procedures and tests must be done to comply with this AD; any procedures or tests that are not identified as RC are recommended. Those procedures and tests that are not identified as RC may be deviated from using accepted methods in accordance with the operator's maintenance or inspection program without obtaining approval of an AMOC, provided the procedures and tests identified as RC can be done and the airplane can be put back in an airworthy condition. Any substitutions or changes to procedures or tests identified as RC require approval of an AMOC.

(4) *Paperwork Reduction Act Burden Statement:* A federal agency may not conduct or sponsor, and a person is not required to respond to, nor shall a person be subject to a penalty for failure to comply with a collection of information subject to the requirements of the Paperwork Reduction Act unless that collection of information displays a current valid OMB Control Number. The OMB Control Number for this information collection is 2120–0056. Public reporting for this collection of information is estimated to be approximately 1 hour per response, including the time for reviewing instructions, searching existing data sources, gathering and maintaining the data needed, and completing and reviewing the collection of information. All responses to this collection of information are mandatory as required by this AD. Send comments regarding this burden estimate or any other aspect of this collection of information, including suggestions for reducing this burden to Information Collection Clearance Officer, Federal Aviation Administration, 10101 Hillwood Parkway, Fort Worth, TX 76177–1524.

(j) Related Information

For more information about this AD, contact Kathleen Arrigotti, Aerospace Engineer, Large Aircraft Section, International Validation Branch, FAA, 2200 South 216th St., Des Moines, WA 98198; telephone and fax 206–231–3218; email *kathleen.arrigotti@faa.gov.*

(k) Material Incorporated by Reference

(1) The Director of the Federal Register approved the incorporation by reference (IBR) of the service information listed in this paragraph under 5 U.S.C. 552(a) and 1 CFR part 51.

(2) You must use this service information as applicable to do the actions required by this AD, unless this AD specifies otherwise.

(i) European Union Aviation Safety Agency (EASA) AD 2020–0139R1, dated July 3, 2020.

(ii) [Reserved]

(3) For EASA AD 2020–0139R1, contact the EASA, Konrad-Adenauer-Ufer 3, 50668 Cologne, Germany; telephone +49 221 8999 000; email *ADs@easa.europa.eu;* internet *www.easa.europa.eu.* You may find this EASA AD on the EASA website at *https://ad.easa.europa.eu.*

(4) You may view this material at the FAA, Airworthiness Products Section, Operational Safety Branch, 2200 South 216th St., Des Moines, WA. For information on the availability of this material at the FAA, call 206–231–3195. This material may be found in the AD docket on the internet at *https://www.regulations.gov* by searching for and locating Docket No. FAA–2020–0846.

(5) You may view this material that is incorporated by reference at the National Archives and Records Administration (NARA). For information on the availability of this material at NARA, email *fedreg.legal@nara.gov,* or go to: *https://www.archives.gov/federal-register/cfr/ibr-locations.html.*

Issued on January 27, 2021.

Lance T. Gant,

Director, Compliance & Airworthiness Division, Aircraft Certification Service.

[FR Doc. 2021–06251 Filed 3–25–21; 8:45 am]

BILLING CODE 4910–13–P

DEPARTMENT OF TRANSPORTATION

Federal Aviation Administration

14 CFR Part 39

[Docket No. FAA–2020–0696; Product Identifier 2018–SW–019–AD; Amendment 39–21485; AD 2021–07–08]

RIN 2120–AA64

Airworthiness Directives; Airbus Helicopters Deutschland GmbH (Type Certificate Previously Held by Eurocopter Deutschland GmbH and Eurocopter Canada Ltd.) Helicopters

AGENCY: Federal Aviation Administration (FAA), DOT.

ACTION: Final rule.

SUMMARY: The FAA is superseding Airworthiness Directive (AD) 97–26–02 for Eurocopter Deutschland GmbH Model BO–105A, BO–105C, BO–105S, BO–105LS A–1, and BO–105LS A–3 helicopters; and Eurocopter Canada Ltd. Model BO–105LS A–3 helicopters. AD 97–26–02 required a repetitive visual inspection for cracks in the ribbed area of the main rotor (M/R) mast flange (flange), and depending on the outcome, replacing the M/R mast. This new AD retains the requirements of AD 97–26–02 and removes the reinforced M/R mast from the applicability. This AD was prompted by the determination that a certain reinforced M/R mast is not affected by the unsafe condition. The actions of this AD are intended to address an unsafe condition on these products.

DATES: This AD is effective April 30, 2021.

The Director of the Federal Register approved the incorporation by reference of a certain publication listed in this AD as of December 31, 1997 (62 FR 65749, December 16, 1997).

ADDRESSES: For service information identified in this final rule, contact Airbus Helicopters, 2701 N Forum Drive, Grand Prairie, TX 75052; telephone 972–641–0000 or 800–232–0323; fax 972–641–3775; or at *https://www.airbus.com/helicopters/services/technical-support.html.* You may view this referenced service information at the FAA, Office of the Regional Counsel, Southwest Region, 10101 Hillwood Pkwy., Room 6N–321, Fort Worth, TX 76177. It is also available on the internet at *https://www.regulations.gov* by searching for and locating Docket No. FAA–2020–0696.

Examining the AD Docket

You may examine the AD docket on the internet at *https://*

www.regulations.gov in Docket No. FAA–2020–0696; or in person at Docket Operations between 9 a.m. and 5 p.m., Monday through Friday, except Federal holidays. The AD docket contains this AD, the European Aviation Safety Agency (now European Union Aviation Safety Agency) (EASA) AD, the Transport Canada AD, any service information that is incorporated by reference, any comments received, and other information. The street address for Docket Operations is U.S. Department of Transportation, Docket Operations, M–30, West Building Ground Floor, Room W12–140, 1200 New Jersey Avenue SE, Washington, DC 20590.

FOR FURTHER INFORMATION CONTACT: Matt Fuller, AD Program Manager, Operational Safety Branch, Airworthiness Products Section, General Aviation & Rotorcraft Unit, FAA, 10101 Hillwood Pkwy., Fort Worth, TX 76177; telephone 817–222–5110; email *matthew.fuller@faa.gov.*

SUPPLEMENTARY INFORMATION:

Discussion

The FAA issued a notice of proposed rulemaking (NPRM) to amend 14 CFR part 39 to remove AD 97–26–02, Amendment 39–10245 (62 FR 65749, December 16, 1997) (AD 97–26–02), and add a new AD. AD 97–26–02 applied to Eurocopter Deutschland GmbH Model BO–105A, BO–105C, BO–105LS A–1, and BO–105LS A–3 helicopters and Eurocopter Canada Ltd. Model BO–105LS A–3 helicopters. AD 97–26–02 was prompted by Luftfahrt-Bundesamt (LBA) AD 97–275, effective September 25, 1997, issued by LBA, which is the airworthiness authority for Germany, to correct an unsafe condition for Eurocopter Deutschland GmbH Model BO 105 helicopters; and Transport Canada AD CF–97–18, dated September 30, 1997 (Transport Canada AD CF–97–18), issued by Transport Canada, which is the aviation authority for Canada. The LBA and Transport Canada ADs required an immediate and repetitive visual inspection for a crack in the flange area after an M/R mast was found to have cracks of critical magnitude.

The NPRM published in the **Federal Register** on July 17, 2020 (85 FR 43506). The NPRM proposed to continue to require the repetitive visual inspection for a crack in the ribbed area of the M/R mast flange, and if there is a crack, removing from service the M/R mast and replacing it with an airworthy M/R mast.

The NPRM was prompted by EASA AD 2018–0056, dated March 14, 2018, issued by EASA, which is the Technical Agent for the Member States of the European Union, to correct an unsafe condition for Airbus Helicopters Deutschland GmbH (previously Eurocopter Deutschland GmbH, Eurocopter Hubschrauber GmbH, Messerschmitt-Bölkow-Blohm GmbH, Eurocopter Canada Ltd, Messerschmitt-Bölkow-Blohm Helicopter Canada Ltd.) Model BO105 A, BO105 C, BO105 D, BO105 LS A–1, BO105 LS A–3 and BO105 S helicopters. EASA advises of the transfer of type certificate responsibility of Eurocopter Canada Ltd. Model BO–105LS A–3 helicopters to Eurocopter Deutschland GmbH and the determination that reinforced M/R mast part number (P/N) 4639 305 095 of M/R mast assembly P/N 4639 205 017 is not affected by this unsafe condition. The EASA AD retains the repetitive visual inspection requirements but only for helicopters with M/R mast P/N 4619 305 032 of M/R mast assembly P/N 4638 205 005, and M/R mast P/N 4639 305 002 of M/R mast assembly P/N 4639 205 017. With the transfer of type certificate responsibility of Eurocopter Canada Ltd. Model BO–105LS A–3 helicopters, Transport Canada issued Transport Canada AD CF–1997–18R1, dated March 12, 2018, to cancel Transport Canada AD CF–97–18.

Also, since the FAA issued AD 97–26–02, Eurocopter Deutschland GmbH changed its name to Airbus Helicopters Deutschland GmbH. This AD reflects that change and updates the contact information to obtain service documentation.

Comments

The FAA gave the public the opportunity to participate in developing this final rule, but the FAA did not receive any comments on the NPRM or on the determination of the cost to the public.

FAA's Determination

These helicopters has been approved by EASA and are approved for operation in the United States. Pursuant to the FAA's bilateral agreement with the European Union, EASA has notified the FAA of the unsafe condition described in its AD. The FAA is issuing this AD after evaluating all of the information provided by EASA and determining the unsafe condition exists and is likely to exist or develop on other helicopters of these same type designs and that air safety and the public interest require adopting the AD requirements as proposed.

Differences Between This AD and the EASA AD

The EASA AD specifies contacting Airbus Helicopters if there is a crack in the flange, whereas this AD requires replacing the M/R mast instead. Also, the EASA AD applies to Model BO105 D and BO105 S helicopters; this AD does not as these model helicopters are not type-certificated in the U.S.

Related Service Information Under 1 CFR Part 51

Eurocopter Deutschland GmbH has issued Alert Service Bulletin No. ASB–BO 105–10–110, dated August 27, 1997, which specifies procedures for repetitive visual inspections of the flange for cracks.

This service information is reasonably available because the interested parties have access to it through their normal course of business or by the means identified in the **ADDRESSES** section.

Costs of Compliance

The FAA estimates that this AD affects 21 helicopters of U.S. Registry. The FAA estimates that operators may incur the following costs in order to comply with this AD. Labor costs are estimated at $85 per work-hour.

Inspecting the flange takes about 0.25 work-hour for an estimated cost of $21 per helicopter and $441 for the U.S. fleet per inspection cycle.

Replacing the M/R mast takes about 8 work-hours and parts cost about $30,000 for an estimated cost of $30,680 per helicopter.

Authority for This Rulemaking

Title 49 of the United States Code specifies the FAA's authority to issue rules on aviation safety. Subtitle I, Section 106, describes the authority of the FAA Administrator. Subtitle VII, Aviation Programs, describes in more detail the scope of the Agency's authority.

The FAA is issuing this rulemaking under the authority described in Subtitle VII, Part A, Subpart III, Section 44701: General requirements. Under that section, Congress charges the FAA with promoting safe flight of civil aircraft in air commerce by prescribing regulations for practices, methods, and procedures the Administrator finds necessary for safety in air commerce. This regulation is within the scope of that authority because it addresses an unsafe condition that is likely to exist or develop on products identified in this rulemaking action.

Regulatory Findings

The FAA has determined that this AD will not have federalism implications under Executive Order 13132. This AD will not have a substantial direct effect on the States, on the relationship between the national government and

the States, or on the distribution of power and responsibilities among the various levels of government.

For the reasons discussed above, I certify that this AD:

(1) Is not a ''significant regulatory action'' under Executive Order 12866,

(2) Will not affect intrastate aviation in Alaska, and

(3) Will not have a significant economic impact, positive or negative, on a substantial number of small entities under the criteria of the Regulatory Flexibility Act.

List of Subjects in 14 CFR Part 39

Air transportation, Aircraft, Aviation safety, Incorporation by reference, Safety.

Adoption of the Amendment

Accordingly, under the authority delegated to me by the Administrator, the FAA amends 14 CFR part 39 as follows:

PART 39—AIRWORTHINESS DIRECTIVES

■ 1. The authority citation for part 39 continues to read as follows:

Authority: 49 U.S.C. 106(g), 40113, 44701.

§ 39.13 [Amended]

■ 2. The FAA amends § 39.13 by:

■ a. Removing Airworthiness Directive (AD) 97–26–02, Amendment 39–10245 (62 FR 65749, December 16, 1997); and

■ b. Adding the following new AD:

2021–07–08 Airbus Helicopters Deutschland GmbH (Type Certificate Previously Held by Eurocopter Deutschland GmbH and Eurocopter Canada Ltd.): Amendment 39–21485; Docket No. FAA–2020–0696; Product Identifier 2018–SW–019–AD.

(a) Applicability

This airworthiness directive (AD) applies to Airbus Helicopters Deutschland GmbH Model BO–105A, BO–105C, BO–105S, BO–105LS A–1, and BO–105LS A–3 helicopters, certificated in any category, with a main rotor (M/R) mast part number (P/N) 4619 305 032 of M/R mast assembly P/N 4638 205 005, or M/R mast P/N 4639 305 002 of M/R mast assembly P/N 4639 205 017.

Note 1 to Paragraph (a): M/R mast assembly P/N 4639 205 017 may also contain reinforced M/R mast P/N 4639 305 095, which is not affected by this AD.

(b) Unsafe Condition

This AD defines the unsafe condition as cracks in the M/R mast flange (flange). This condition could result in failure of the flange and subsequent loss of control of the helicopter.

(c) Affected ADs

This AD replaces AD 97–26–02, Amendment 39–10245 (62 FR 65749, December 16, 1997).

(d) Effective Date

This AD becomes effective April 30, 2021.

(e) Compliance

You are responsible for performing each action required by this AD within the specified compliance time unless it has already been accomplished prior to that time.

(f) Required Actions

(1) Before further flight and thereafter at intervals not to exceed 100 hours time-in-service, visually inspect the flange in the ribbed area for cracks using a 5-power or higher magnifying glass in accordance with paragraphs 2.A.1. and 2.A.2. of the Accomplishment Instructions in Eurocopter Deutschland GmbH Alert Service Bulletin No. ASB–BO 105–10–110, dated August 27, 1997.

(2) If there is a crack, remove from service the cracked M/R mast and replace it with an airworthy M/R mast.

(g) Alternative Methods of Compliance (AMOCs)

(1) The Manager, International Validation Branch, FAA, has the authority to approve AMOCs for this AD, if requested using the procedures found in 14 CFR 39.19. In accordance with 14 CFR 39.19, send your request to your principal inspector or local Flight Standards District Office, as appropriate. If sending information directly to the manager of the International Validation Branch, send it to the attention of the person identified in paragraph (h)(1) of this AD. Information may be emailed to: *9-AVS-AIR-730-AMOC@faa.gov.*

(2) For operations conducted under a 14 CFR part 119 operating certificate or under 14 CFR part 91, subpart K, the FAA suggests that you notify your principal inspector, or lacking a principal inspector, the manager of the local flight standards district office or certificate holding district office, before operating any aircraft complying with this AD through an AMOC.

(h) Related Information

(1) For more information about this AD, contact Matt Fuller, AD Program Manager, Operational Safety Branch, Airworthiness Products Section, General Aviation & Rotorcraft Unit, FAA, 10101 Hillwood Pkwy., Fort Worth, TX 76177; telephone 817–222–5110; email *matthew.fuller@faa.gov.*

(2) The subject of this AD is addressed in European Aviation Safety Agency (now European Union Aviation Safety Agency) (EASA) AD 2018–0056, dated March 14, 2018; and Transport Canada AD CF–1997–18R1, dated March 12, 2018. You may view the EASA and Transport Canada ADs on the internet at *https://www.regulations.gov* in Docket No. FAA–2020–0696.

(i) Subject

Joint Aircraft Service Component (JASC) Code: 6230, Main Rotor Mast/Swashplate

(j) Material Incorporated by Reference

(1) The Director of the Federal Register approved the incorporation by reference of the service information listed in this paragraph under 5 U.S.C. 552(a) and 1 CFR part 51.

(2) You must use this service information as applicable to do the actions required by this AD, unless the AD specifies otherwise.

(3) The following service information was approved for IBR on December 31, 1997 (62 FR 65749, December 16, 1997).

(i) Eurocopter Deutshland GmbH Alert Service Bulletin No. ASB–BO 105–10–110, dated August 27, 1997.

(ii) [Reserved]

(4) For service information identified in this AD, contact Airbus Helicopters, 2701 N Forum Drive, Grand Prairie, TX 75052; telephone 972–641–0000 or 800–232–0323; fax 972–641–3775; or at *https://www.airbus.com/helicopters/services/technical-support.html.*

(5) You may view this service information at the FAA, Office of the Regional Counsel, Southwest Region, 10101 Hillwood Pkwy., Room 6N–321, Fort Worth, TX 76177. For information on the availability of this material at the FAA, call 817–222–5110.

(6) You may view this service information that is incorporated by reference at the National Archives and Records Administration (NARA). For information on the availability of this material at NARA, email *fedreg.legal@nara.gov,* or go to: *https://www.archives.gov/federal-register/cfr/ibr-locations.html.*

Issued on March 20, 2021.

Gaetano A. Sciortino,

Deputy Director for Strategic Initiatives, Compliance & Airworthiness Division, Aircraft Certification Service.

[FR Doc. 2021–06205 Filed 3–25–21; 8:45 am]

BILLING CODE 4910–13–P

DEPARTMENT OF TRANSPORTATION

Federal Aviation Administration

14 CFR Part 39

[Docket No. FAA–2020–1136; Project Identifier MCAI–2020–01301–R; Amendment 39–21468; AD 2021–06–02]

RIN 2120–AA64

Airworthiness Directives; Airbus Helicopters

AGENCY: Federal Aviation Administration (FAA), DOT.

ACTION: Final rule.

SUMMARY: The FAA is adopting a new airworthiness directive (AD) for all Airbus Helicopters Model AS332L, AS332L1, AS332C, and AS332C1 helicopters. This AD was prompted by the failure of a second stage planet gear installed in the main gearbox (MGB). This AD requires identifying the part number of each second stage planet gear

assembly installed in the MGB, replacing an MGB having certain second stage planet gear assembly part numbers with a serviceable MGB, modifying the helicopter by installing a full flow magnetic plug (FFMP), repetitively inspecting the FFMP and the MGB bottom housing and conical housing for metal particles, analyzing any metal particles that are found, and applying corrective actions if necessary, as specified in European Union Aviation Safety Agency (EASA) ADs, which are incorporated by reference. The FAA is issuing this AD to address the unsafe condition on these products.

DATES: This AD is effective April 30, 2021.

The Director of the Federal Register approved the incorporation by reference of certain publications listed in this AD as of April 30, 2021.

ADDRESSES: For material incorporated by reference (IBR) in this AD, contact the EASA, Konrad-Adenauer-Ufer 3, 50668 Cologne, Germany; telephone +49 221 8999 000; email *ADs@easa.europa.eu;* internet *www.easa.europa.eu.* You may find this material on the EASA website at *https://ad.easa.europa.eu.* You may view this material at the FAA, Office of the Regional Counsel, Southwest Region, 10101 Hillwood Pkwy., Room 6N–321, Fort Worth, TX 76177. For information on the availability of this material at the FAA, call 817–222–5110. It is also available in the AD docket on the internet at *https://www.regulations.gov* by searching for and locating Docket No. FAA–2020–1136.

Examining the AD Docket

You may examine the AD docket on the internet at *https://www.regulations.gov* by searching for and locating Docket No. FAA–2020–1136; or in person at Docket Operations between 9 a.m. and 5 p.m., Monday through Friday, except Federal holidays. The AD docket contains this final rule, any comments received, and other information. The address for Docket Operations is U.S. Department of Transportation, Docket Operations, M–30, West Building Ground Floor, Room W12–140, 1200 New Jersey Avenue SE, Washington, DC 20590.

FOR FURTHER INFORMATION CONTACT: Mahmood Shah, Aviation Safety Engineer, Fort Worth ACO Branch, FAA, 10101 Hillwood Pkwy., Fort Worth, TX 76177; telephone 817 222 5538; email *mahmood.g.shah@faa.gov.*

SUPPLEMENTARY INFORMATION:

Discussion

The EASA, which is the Technical Agent for the Member States of the European Union, has issued EASA AD 2020–0022R2, dated December 23, 2020 (EASA AD 2020–0022R2) (also referred to as the Mandatory Continuing Airworthiness Information, or the MCAI), to correct an unsafe condition for all Airbus Helicopters Model AS332L, AS332L1, AS332C, and AS332C1 helicopters.

The FAA issued a notice of proposed rulemaking (NPRM) to amend 14 CFR part 39 by adding an AD that would apply to all Airbus Helicopters Model AS332L, AS332L1, AS332C, and AS332C1 helicopters. The NPRM published in the **Federal Register** on December 21, 2020 (85 FR 82977). The NPRM was prompted by the failure of a second stage planet gear installed in the MGB of an Airbus Helicopters Model EC225LP helicopter. Airbus Helicopters Model AS332L, AS332L1, AS332C, and AS332C1 helicopters have a similar design to the affected Model EC225LP helicopter, therefore, these models may be subject to the unsafe condition revealed on the Model EC225LP helicopter. The NPRM proposed to require identifying the part number of each second stage planet gear assembly installed in the MGB, replacing an MGB having certain second stage planet gear assembly part numbers with a serviceable MGB, modifying the helicopter by installing an FFMP, repetitively inspecting the FFMP and the MGB bottom housing and conical housing for metal particles, analyzing any metal particles that are found, and applying corrective actions if necessary as specified in an EASA AD.

The FAA is issuing this AD to address failure of a second stage planet gear installed in the MGB, which could result in failure of the MGB and subsequent loss of control of the helicopter. See the MCAI for additional background information.

Comments

The FAA gave the public the opportunity to participate in developing this final rule. The FAA received no comments on the NPRM or on the determination of the cost to the public.

New EASA AD

In the NPRM, the FAA referred to EASA AD 2020–0022R1, dated September 18, 2020 (EASA AD 2020–0022R1). Since the NPRM was issued, EASA issued EASA AD 2020–0022R2, which extends the compliance time for installation of the FFMP.

The FAA determined that no additional work is required for helicopters that have accomplished the actions as required by EASA AD 2020–0022R1. Therefore, the FAA has revised all applicable sections in this final rule to also specify EASA AD 2020–0022R2.

Conclusion

The FAA reviewed the relevant data and determined that air safety and the public interest require adopting this final rule with the changes described previously and minor editorial changes. The FAA has determined that these minor changes:

- Are consistent with the intent that was proposed in the NPRM for addressing the unsafe condition; and
- Do not add any additional burden upon the public than was already proposed in the NPRM.

The FAA also determined that these changes will not increase the economic burden on any operator or increase the scope of this final rule.

Related Service Information Under 1 CFR Part 51

EASA ADs 2020–0022R1 and 2020–0022R2 describe procedures for identifying the part number of each second stage planet gear assembly installed in the MGB, replacing an MGB having certain second stage planet gear assembly part numbers with a serviceable MGB, modifying the helicopter by installing an FFMP, repetitively inspecting the FFMP and the MGB bottom housing and conical housing for metal particles, analyzing any metal particles that are found, and applicable corrective actions. The corrective actions include replacing an affected MGB with a serviceable MGB. These documents are distinct since EASA AD 2020–0022R2 extends the compliance time for installation of the FFMP.

This material is reasonably available because the interested parties have access to it through their normal course of business or by the means identified in the **ADDRESSES** section.

Costs of Compliance

The FAA estimates that this AD affects 11 helicopters of U.S. registry. The FAA estimates the following costs to comply with this AD:

ESTIMATED COSTS FOR REQUIRED ACTIONS

Labor cost	Parts cost	Cost per product	Cost on U.S. operators
8.50 work-hours × $85 per hour = $722.50	$17,625	$18,347.50	$201,822.50

The FAA estimates the following costs to do any necessary on-condition actions that would be required based on the results of any required actions. The FAA has no way of determining the number of helicopters that might need these on-condition actions:

ESTIMATED COSTS OF ON-CONDITION ACTIONS

Labor cost	Parts cost	Cost per product
40.50 work-hour × $85 per hour = $3,442.50	$275,000 (overhauled part)	$278,442.50

According to the manufacturer, some or all of the costs of this AD may be covered under warranty, thereby reducing the cost impact on affected operators. The FAA does not control warranty coverage for affected operators. As a result, the FAA has included all known costs in the cost estimate.

Authority for This Rulemaking

Title 49 of the United States Code specifies the FAA's authority to issue rules on aviation safety. Subtitle I, section 106, describes the authority of the FAA Administrator. Subtitle VII: Aviation Programs, describes in more detail the scope of the Agency's authority.

The FAA is issuing this rulemaking under the authority described in Subtitle VII, Part A, Subpart III, Section 44701: General requirements. Under that section, Congress charges the FAA with promoting safe flight of civil aircraft in air commerce by prescribing regulations for practices, methods, and procedures the Administrator finds necessary for safety in air commerce. This regulation is within the scope of that authority because it addresses an unsafe condition that is likely to exist or develop on products identified in this rulemaking action.

Regulatory Findings

This AD will not have federalism implications under Executive Order 13132. This AD will not have a substantial direct effect on the States, on the relationship between the national government and the States, or on the distribution of power and responsibilities among the various levels of government.

For the reasons discussed above, I certify that this AD:

(1) Is not a ''significant regulatory action'' under Executive Order 12866,

(2) Will not affect intrastate aviation in Alaska, and

(3) Will not have a significant economic impact, positive or negative, on a substantial number of small entities under the criteria of the Regulatory Flexibility Act.

List of Subjects in 14 CFR Part 39

Air transportation, Aircraft, Aviation safety, Incorporation by reference, Safety.

Adoption of the Amendment

Accordingly, under the authority delegated to me by the Administrator, the FAA amends 14 CFR part 39 as follows:

PART 39—AIRWORTHINESS DIRECTIVES

■ 1. The authority citation for part 39 continues to read as follows:

Authority: 49 U.S.C. 106(g), 40113, 44701.

§ 39.13 [Amended]

■ 2. The FAA amends § 39.13 by adding the following new airworthiness directive:

2021–06–02 Airbus Helicopters: Amendment 39–21468; Docket No. FAA–2020–1136; Project Identifier MCAI–2020–01301–R.

(a) Effective Date

This airworthiness directive (AD) is effective April 30, 2021.

(b) Affected ADs

None.

(c) Applicability

This AD applies to all Airbus Helicopters Model AS332L, AS332L1, AS332C, and AS332C1 helicopters, certificated in any category.

(d) Subject

Joint Aircraft System Component (JASC) Code 6320, Main Rotor Gear Box.

(e) Reason

This AD was prompted by the failure of a second stage planet gear installed in the main gearbox (MGB). The FAA is issuing this AD to address failure of an MGB second stage planet gear, which could result in failure of the MGB and subsequent loss of control of the helicopter.

(f) Compliance

Comply with this AD within the compliance times specified, unless already done.

(g) Requirements

Except as specified in paragraph (h) of this AD: Comply with all required actions and compliance times specified in, and in accordance with, European Union Aviation Safety Agency (EASA) AD 2020–0022R1, dated September 18, 2020 (EASA AD 2020–0022R1); or EASA AD 2020–0022R2, dated December 23, 2020 (EASA AD 2020–0022R2).

(h) Exceptions to EASA ADs 2020–0022R1 and 2020–0022R2

(1) Where EASA ADs 2020–0022R1 and 2020–0022R2 refer to March 30, 2018 (the effective date of EASA AD 2018–0066, dated March 23, 2018) or February 21, 2020 (the effective date of EASA AD 2020–0022, dated February 7, 2020), this AD requires using the effective date of this AD.

(2) The ''Remarks'' sections of EASA ADs 2020–0022R1 and 2020–0022R2 do not apply to this AD.

(3) Where EASA ADs 2020–0022R1 and 2020–0022R2 refer to flight hours (FH), this AD requires using hours time-in-service.

(4) Where the service information referred to in paragraphs (5) and (6) of EASA ADs 2020–0022R1 and 2020–0022R2 specifies to perform a metallurgical analysis and contact the manufacturer if unsure about the characterization of the particles collected, this AD does not require contacting the manufacturer to determine the characterization of the particles collected.

(5) Although the service information referred to in paragraph (6) of EASA ADs 2020–0022R1 and 2020–0022R2 specifies that if any 16NCD13 particles are found send a 1-liter sample of oil to the manufacturer, this AD does not require that action.

(6) Although the service information referenced in EASA ADs 2020–0022R1 and 2020–0022R2 specifies to discard certain parts, this AD does not include that requirement.

(7) Although the service information referenced in EASA ADs 2020–0022R1 and 2020–0022R2 specifies returning certain parts to the manufacturer, this AD does not require that action.

(8) Although the service information referenced in EASA ADs 2020–0022R1 and 2020–0022R2 specifies to contact the manufacturer if certain specified criteria are exceeded, this AD does not include that requirement.

(9) Although the service information referenced in EASA ADs 2020–0022R1 and 2020–0022R2 specifies to submit certain information to the manufacturer, this AD does not include that requirement.

(10) Although the service information referenced in EASA ADs 2020–0022R1 and 2020–0022R2 specifies to watch a video for removing the grease from the full flow magnetic plug (FFMP), using a cleaning agent, and collecting particles, this AD does not include that requirement.

(11) Where EASA ADs 2020–0022R1 and 2020–0022R2 require actions after the last flight of the day or ''ALF,'' this AD requires those actions before the first flight of the day.

(i) Special Flight Permit

Special flight permits may be issued in accordance with 14 CFR 21.197 and 21.199 to operate the helicopter to a location where the helicopter can be modified (if the operator elects to do so), provided no passengers are onboard.

(j) Alternative Methods of Compliance (AMOCs)

(1) The Manager, International Validation Branch, FAA, has the authority to approve AMOCs for this AD, if requested using the procedures found in 14 CFR 39.19. In accordance with 14 CFR 39.19, send your request to your principal inspector or local Flight Standards District Office, as appropriate. If sending information directly to the manager of the International Validation Branch, send it to the attention of the person identified in paragraph (k) of this AD. Information may be emailed to: *9-AVS-AIR-730-AMOC@faa.gov.*

(2) Before using any approved AMOC, notify your appropriate principal inspector, or lacking a principal inspector, the manager of the local flight standards district office/certificate holding district office.

(k) Related Information

For more information about this AD, contact Mahmood Shah, Aviation Safety Engineer, Fort Worth ACO Branch, FAA, 10101 Hillwood Pkwy., Fort Worth, TX 76177; telephone 817 222 5538; email *mahmood.g.shah@faa.gov.*

(l) Material Incorporated by Reference

(1) The Director of the Federal Register approved the incorporation by reference (IBR) of the service information listed in this paragraph under 5 U.S.C. 552(a) and 1 CFR part 51.

(2) You must use this service information as applicable to do the actions required by this AD, unless this AD specifies otherwise.

(i) European Union Aviation Safety Agency (EASA) AD 2020–0022R1, dated September 18, 2020.

(ii) European Union Aviation Safety Agency (EASA) AD 2020–0022R2, dated December 23, 2020.

(3) For EASA AD 2020–0022R1 and EASA AD 2020–0022R2, contact the EASA, Konrad-Adenauer-Ufer 3, 50668 Cologne, Germany; telephone +49 221 8999 000; email *ADs@easa.europa.eu;* Internet *www.easa.europa.eu.* You may find this EASA AD on the EASA website at *https://ad.easa.europa.eu.*

Note 1 to paragraph (l)(3): EASA AD 2020–0022R1 can be accessed in the zipped file at the bottom of the web page for EASA AD 2020–0022R2. When EASA posts a revised AD on their website, they watermark the previous AD as ''Revised,'' alter the file name by adding ''_revised'' to the end, and move it into a zipped file attached at the bottom of the AD web page.

(4) You may view this service information at the FAA, Office of the Regional Counsel, Southwest Region, 10101 Hillwood Pkwy., Room 6N–321, Fort Worth, TX 76177. For information on the availability of this material at the FAA, call 817–222–5110. This material may be found in the AD docket on the internet at *https://www.regulations.gov* by searching for and locating Docket No. FAA–2020–1136.

(5) You may view this material that is incorporated by reference at the National Archives and Records Administration (NARA). For information on the availability of this material at NARA, email *fedreg.legal@nara.gov,* or go to *https://www.archives.gov/federal-register/cfr/ibr-locations.html.*

Issued on March 8, 2021.

Gaetano A. Sciortino,

Deputy Director for Strategic Initiatives, Compliance & Airworthiness Division, Aircraft Certification Service.

[FR Doc. 2021–06239 Filed 3–25–21; 8:45 am]

BILLING CODE 4910–13–P

DEPARTMENT OF TRANSPORTATION

Federal Aviation Administration

14 CFR Part 95

[Docket No. 31363; Amdt. No. 558]

IFR Altitudes; Miscellaneous Amendments

AGENCY: Federal Aviation Administration (FAA), DOT.

ACTION: Final rule.

SUMMARY: This amendment adopts miscellaneous amendments to the required IFR (instrument flight rules) altitudes and changeover points for certain Federal airways, jet routes, or direct routes for which a minimum or maximum en route authorized IFR altitude is prescribed. This regulatory action is needed because of changes occurring in the National Airspace System. These changes are designed to provide for the safe and efficient use of the navigable airspace under instrument conditions in the affected areas.

DATES: Effective 0901 UTC, April 22, 2021.

FOR FURTHER INFORMATION CONTACT: Thomas J. Nichols, Flight Procedures and Airspace Group, Flight Technologies and Procedures Division, Flight Standards Service, Federal Aviation Administration. Mailing Address: FAA Mike Monroney Aeronautical Center, Flight Procedures and Airspace Group, 6500 South MacArthur Blvd., Registry Bldg 29 Room 104, Oklahoma City, OK 73125. Telephone: (405) 954–4164.

SUPPLEMENTARY INFORMATION: This amendment to part 95 of the Federal Aviation Regulations (14 CFR part 95) amends, suspends, or revokes IFR altitudes governing the operation of all aircraft in flight over a specified route or any portion of that route, as well as the changeover points (COPs) for Federal airways, jet routes, or direct routes as prescribed in part 95.

The Rule

The specified IFR altitudes, when used in conjunction with the prescribed changeover points for those routes, ensure navigation aid coverage that is adequate for safe flight operations and free of frequency interference. The reasons and circumstances that create the need for this amendment involve matters of flight safety and operational efficiency in the National Airspace System, are related to published aeronautical charts that are essential to the user, and provide for the safe and efficient use of the navigable airspace. In addition, those various reasons or circumstances require making this amendment effective before the next scheduled charting and publication date of the flight information to assure its timely availability to the user. The effective date of this amendment reflects those considerations. In view of the close and immediate relationship between these regulatory changes and safety in air commerce, I find that notice and public procedure before adopting this amendment are impracticable and contrary to the public interest and that good cause exists for making the amendment effective in less than 30 days.

Conclusion

The FAA has determined that this regulation only involves an established

body of technical regulations for which frequent and routine amendments are necessary to keep them operationally current. It, therefore—(1) is not a ''significant regulatory action'' under Executive Order 12866; (2) is not a ''significant rule'' under DOT Regulatory Policies and Procedures (44 FR 11034; February 26, 1979); and (3) does not warrant preparation of a regulatory evaluation as the anticipated impact is so minimal. For the same reason, the FAA certifies that this amendment will not have a significant economic impact on a substantial number of small entities under the criteria of the Regulatory Flexibility Act.

List of Subjects in 14 CFR Part 95
Airspace, Navigation (air).

Issued in Washington, DC, on March 19, 2021.

Wade Terrell,

Aviation Safety Manager, Flight Procedures & Airspace Group, Flight Technologies and Procedures Division.

Adoption of the Amendment

Accordingly, pursuant to the authority delegated to me by the Administrator, part 95 of the Federal Aviation Regulations (14 CFR part 95) is amended as follows effective at 0901 UTC, June 03, 2010.

■ 1. The authority citation for part 95 continues to read as follows:

Authority: 49 U.S.C. 106(g), 40103, 40106, 40113, 40114, 40120, 44502, 44514, 44719, 44721.

■ 2. Part 95 is amended to read as follows:

REVISIONS TO IFR ALTITUDES & CHANGEOVER POINT

[Amendment 558 Effective Date April 22, 2021]

From	To	MEA	MAA
§ 95.3000 Low Altitude RNAV Routes			
§ 95.3208 RNAV Route T208 Is Amended To Delete			
GATORS, FL VORTAC	CARRA, FL FIX	2100	15000
CARRA, FL FIX	ORMOND BEACH, FL VORTAC	2300	15000
Is Added To Read			
WALEE, FL WP	MMKAY, FL WP	2000	17500
MMKAY, FL WP	FOXAM, FL WP	1800	17500
FOXAM, FL WP	SUUGR, FL WP	1800	17500
SUUGR, FL WP	SMYRA, FL FIX	1800	17500
SMYRA, FL FIX	OAKIE, FL FIX	1800	17500
OAKIE, FL FIX	MALET, FL FIX	1800	17500
MALET, FL FIX	TICCO, FL FIX	1800	17500
TICCO, FL FIX	INDIA, FL FIX	1800	17500
INDIA, FL FIX	DIMBY, FL WP	1800	17500
DIMBY, FL WP	VALKA, FL FIX	1800	17500
VALKA, FL FIX	SULTY, FL WP	1700	17500
SULTY, FL WP	WIXED, FL WP	1700	17500
WIXED, FL WP	CLEFF, FL WP	1700	17500
CLEFF, FL WP	DURRY, FL WP	1700	17500
DURRY, FL WP	BOBOE, FL WP	1700	17500
BOBOE, FL WP	SHANC, FL FIX	1700	17500
§ 95.3210 RNAV Route T210 Is Amended By Adding			
MARQO, FL WP	OHLEE, FL WP	1900	9000
BRADO, FL FIX	MMKAY, FL WP	1800	17500
MMKAY, FL WP	MRUTT, FL WP	1800	17500
MRUTT, FL WP	GUANO, FL FIX	1800	17500
GUANO, FL FIX	KIZER, FL FIX	1800	17500
KIZER, FL FIX	EMSEE, FL WP	1800	17500
EMSEE, FL WP	DAIYL, FL WP	1900	17500
DAIYL, FL WP	AKOJO, FL WP	1800	17500
AKOJO, FL WP	PUNQU, FL WP	2000	17500
PUNQU, FL WP	VARZE, FL WP	1900	17500
Is Amended To Delete			
TAYLOR, FL VORTAC	OHLEE, FL WP	1900	9000
§ 95.3336 RNAV Route T336 Is Added To Read			
TROYR, FL WP	OMMNI, FL WP	2500	17500
OMMNI, FL WP	PUNQU, FL WP	2000	17500
PUNQU, FL WP	YOJIX, FL FIX	2200	17500
YOJIX, FL FIX	YONMA, FL FIX	2200	17500
YONMA, FL FIX	ODDEL, FL FIX	1800	17500
*2700—MCA ODDEL, FL FIX, E BND			
ODDEL, FL FIX	DEARY, FL FIX	2700	17500
DEARY, FL FIX	WIXED, FL WP	1800	17500

REVISIONS TO IFR ALTITUDES & CHANGEOVER POINT—Continued

[Amendment 558 Effective Date April 22, 2021]

From	To	MEA	MAA
§ 95.3337 RNAV Route T337 Is Added To Read			
SWENY, FL WP	RISKS, FL WP	2000	17500
RISKS, FL WP	WEZER, FL WP	2000	17500
§ 95.3339 RNAV Route T339 Is Added To Read			
KARTR, FL FIX	DEEDS, FL FIX	1700	17500
DEEDS, FL FIX	SWAGS, FL FIX	1700	17500
SWAGS, FL FIX	ZAGPO, FL WP	1700	17500
ZAGPO, FL WP	DIDDY, FL FIX	1700	17500
DIDDY, FL FIX	ODDEL, FL FIX	2700	17500
§ 95.3341 RNAV Route T341 Is Added To Read			
MEAGN, FL WP	ZAGPO, FL WP	1700	17500
ZAGPO, FL WP	CUSEK, FL WP	1700	17500
CUSEK, FL WP	WEZER, FL WP	2000	17500
WEZER, FL WP	VARZE, FL WP	2000	17500
VARZE, FL WP	MARQO, FL WP	2100	12000
§ 95.3343 RNAV Route T343 Is Added To Read			
WORPP, FL FIX	CUSEK, FL WP	1800	17500
CUSEK, FL WP	FEBRO, FL WP	1800	17500
FEBRO, FL WP	TAHRS, FL WP	2000	17500
TAHRS, FL WP	YOJIX, FL FIX	2000	17500
YOJIX, FL FIX	YONMA, FL FIX	2200	17500
YONMA, FL FIX	ODDEL, FL FIX	1800	17500
*2700—MCA ODDEL, FL FIX, E BND			
ODDEL, FL FIX	DEARY, FL FIX	2700	17500
DEARY, FL FIX	INDIA, FL FIX	1800	17500
§ 95.3345 RNAV Route T345 Is Added To Read			
MARKT, FL WP	AIRBT, FL WP	1700	17500
AIRBT, FL WP	DOWDI, FL WP	1700	17500
DOWDI, FL WP	LLNCH, FL FIX	1800	17500
LLNCH, FL FIX	DEARY, FL FIX	1800	17500
§ 95.3347 RNAV Route T347 Is Added To Read			
CLEFF, FL WP	BAIRN, FL FIX	1800	17500
BAIRN, FL FIX	SABOT, FL FIX	1800	17500
SABOT, FL FIX	CROPY, FL FIX	1800	17500
CROPY, FL FIX	KIZER, FL FIX	1800	17500
KIZER, FL FIX	GUANO, FL FIX	1800	17500
GUANO, FL FIX	MRUTT, FL WP	1800	17500
MRUTT, FL WP	FOXAM, FL WP	1800	17500
FOXAM, FL WP	SEBAG, FL FIX	1700	17500
§ 95.3349 RNAV Route T349 Is Added To Read			
VARZE, FL WP	TROYR, FL WP	1900	17500
§ 95.3353 RNAV Route T353 Is Added To Read			
FEBRO, FL WP	MOANS, FL FIX	1900	17500
MOANS, FL FIX	PUNQU, FL WP	1900	17500
PUNQU, FL WP	AKOJO, FL WP	2000	17500
AKOJO, FL WP	DAIYL, FL WP	1800	17500
DAIYL, FL WP	EMSEE, FL WP	1900	17500
EMSEE, FL WP	KIZER, FL FIX	1800	17500
KIZER, FL FIX	GUANO, FL FIX	1800	17500
GUANO, FL FIX	MRUTT, FL WP	1800	17500
MRUTT, FL WP	FOXAM, FL WP	1800	17500
FOXAM, FL WP	ASTOR, FL FIX	1700	17500

From	To	MEA
§ 95.6001 Victor Routes–U.S.		
§ 95.6012 VOR Federal Airway V12 Is Amended To Delete		
MITBEE, OK VORTAC	CARON, OK FIX.	
	SW BND	*5000
	NE BND	*8000
*3700—MOCA		
CARON, OK FIX	ANTHONY, KS VORTAC.	
	NE BND	3000
	SW BND	5000
ANTHONY, KS VORTAC	WICHITA, KS VORTAC	3600
§ 95.6024 VOR Federal Airway V24 Is Amended To Read In Part		
REDWOOD FALLS, MN VOR/DME	*ALMAY, MN FIX	**3400
*5000—MRA		
**2900—MOCA		
ALMAY, MN FIX	KASPR, MN FIX	3400
§ 95.6026 VOR Federal Airway V26 Is Amended To Read In Part		
MUDDY MOUNTAIN, WY VOR/DME	SALON, WY FIX.	
	NE BND	13000
	SW BND	8000
SALON, WY FIX	RULER, SD FIX	*13000
*9500—MOCA		
RULER, SD FIX	*RAPID CITY, SD VORTAC.	
	NE BND	8300
	SW BND	13000
*11300—MCA RAPID CITY, SD VORTAC, SW BND		
§ 95.6074 VOR Federal Airway V74 Is Amended To Delete		
DODGE CITY, KS VORTAC	*SAFER, KS WP	4300
*4500—MRA		
SAFER, KS WP	ANTHONY, KS VORTAC.	
	NW BND	4300
	SE BND	3600
ANTHONY, KS VORTAC	PIONEER, OK VORTAC	3000
§ 95.6221 VOR Federal Airway V221 Is Amended To Read In Part		
FORT WAYNE, IN VORTAC	*GAREN, IN FIX	3000
*4500—MRA		
GAREN, IN FIX	ILTON, IN FIX	*3000
*2400—MOCA		
§ 95.6345 VOR Federal Airway V345 Is Amended To Read In Part		
DELLS, WI VORTAC	*MILTO, WI FIX	**3500
*4700—MCA MILTO, WI FIX, NW BND		
**2800—MOCA		
MILTO, WI FIX	EAU CLAIRE, WI VORTAC	*4700
*3500—MOCA		
*3500—GNSS MEA		
§ 95.6398 VOR Federal Airway V398 Is Amended To Read In Part		
REDWOOD FALLS, MN VOR/DME	*ALMAY, MN FIX	**3400
*5000—MRA		
**2900—MOCA		
ALMAY, MN FIX	KASPR, MN FIX	3400
§ 95.6516 VOR FEDERAL AIRWAY V516 Is Amended To Delete		
LIBERAL, KS VORTAC	ANTHONY, KS VORTAC	*6000
*4500—MOCA		
ANTHONY, KS VORTAC	PIONEER, OK VORTAC	3000
§ 95.6543 VOR Federal Airway V543 Is Amended To Read In Part		
OYSTY, LA FIX	*RYTHM, LA FIX	2000
*4200—MCA RYTHM, LA FIX, NE BND		

[FR Doc. 2021–06161 Filed 3–25–21; 8:45 am]

BILLING CODE 4910–13–P

DEPARTMENT OF VETERANS AFFAIRS

38 CFR Part 17

RIN 2900–AQ69

Billing and Collection by VA for Medical Care and Services

AGENCY: Department of Veterans Affairs.

ACTION: Final rule.

SUMMARY: The Department of Veterans Affairs (VA) adopts as final, with nonsubstantive changes, a proposed rule to revise its regulations concerning collection and recovery by VA for medical care and services provided to an individual for treatment of a nonservice-connected disability. Specifically, this rulemaking will revise the provisions of VA regulations that determine the charges VA will bill third-party payers for non-VA care provided at VA expense, will include a time limit for which third-party payers can request a refund, and will clarify that third-party payers cannot reduce or refuse payment because of the billing methodology used to determine the charge.

DATES: This rule is effective on April 26, 2021.

FOR FURTHER INFORMATION CONTACT: Joseph Duran, Office of Community Care (10D), Veterans Health Administration, Department of Veterans Affairs, Ptarmigan at Cherry Creek, Denver, CO 80209; (303) 372–4629. (This is not a toll-free number.)

SUPPLEMENTARY INFORMATION: Under section 1729 of Title 38, United States Code (U.S.C.), VA has the right to recover or collect reasonable charges for medical care or services from a third party to the extent that the veteran or the provider of the care or services would be eligible to receive payment from the third party for: A nonservice-connected disability for which the veteran is entitled to care (or the payment of expenses of care) under a health plan contract; a nonservice-connected disability incurred incident to the veteran's employment and covered under a worker's compensation law or plan that provides reimbursement or indemnification for such care and services; or a nonservice-connected disability incurred as a result of a motor vehicle accident in a State that requires automobile accident reparations (no-fault) insurance.

On October 28, 2019, VA published a proposed rule to revise the methodology in 38 CFR 17.101 with regards to how VA calculates reasonable charges for purposes of billing third parties when medical care was provided at a non-VA facility at VA expense. Specifically, that rule proposed calculating these charges in the same manner as if the care and services had been provided in VA facilities. *See* 84 FR 57668. That proposed rule additionally sought to make several technical amendments to § 17.101, to correct clerical errors, update office and data source names, add two new definitions, and remove one current definition to be consistent with the proposed technical amendments. Lastly, the proposed rule sought to revise § 17.106 to clarify the timeframe for submitting a written request for a refund for claims under 38 U.S.C. 1729, further explaining that VA would not provide a refund for any reason, to include if a retroactive service-connection determination is made more than 18 months after the date payment is made by the third-party payer, and adding a new condition under which a third-party payer could not refuse or reduce their payment for a claim under section 1729.

VA received five comments in response to the proposed rule, some of which supported the proposed rule and requested clarifications and some of which suggested changes to provisions in the proposed rule. For the reasons stated below, we adopt the proposed rule as final with minor nonsubstantive changes.

One comment expressed support for the rule because it would establish additional safeguards to ensure that third-party insurance payers could not reject VA's requests for payment due to disagreements with administrative issues such as billing methods. This comment did not suggest any changes to the proposed regulatory revisions, and we do not make changes based on this comment.

Two comments expressed support for the proposed rule but also requested clarification of how VA will treat third-party payments for non-VA care for veterans that do not have private health insurance, with one comment more specifically requesting clarification of whether uninsured veterans will be responsible for payment of the same non-VA care that third-party insurers are responsible for under the proposed rule. We clarify that veterans without private health insurance would not be responsible for the cost of non-VA care where such veterans are otherwise eligible for VA to pay for such care, for instance, if such veterans were eligible to receive care or services through the Veterans Community Care Program pursuant to 38 U.S.C. 1703 and 38 CFR 17.4000 *et seq.* The same comment that specifically requested clarification of a veteran's financial responsibility where they have no private health insurance also expressed concern that, if veterans without private health insurance were not financially responsible for the cost of non-VA care, then VA may create an incentive for veterans to drop their other private health insurance. The rationale for this statement in the comment was that where a veteran is privately insured, the VA benefit to cover non-VA care is non-existent, and because a majority of private insurers impute some level of cost-sharing, it would be more economical for veterans to simply not be privately insured. Although this comment is beyond the scope of the proposed rule (as § 17.101 has long implemented VA's authority under 38 U.S.C. 1729 to collect from third-party insurers for the costs of care furnished or paid for by VA, this was not a new change in the proposed rule), we will correct some misstatements from the comment to provide a more full response. We first correct the statement from the comment that where a veteran is privately insured, the VA benefit to cover non-VA care is non-existent—VA's legal authority to furnish non-VA care, such as care furnished pursuant to 38 U.S.C. 1703 and 38 CFR 17.4000 *et seq.,* is controlled outside of VA's authority to collect from third-party insurers under section 1729, and VA's provision of non-VA care is not dependent on whether a veteran has private health insurance. We also correct the potential misunderstanding that veterans without private health insurance would be free from cost-sharing responsibilities where VA pays for the provision of non-VA care, such veterans may be subject to VA copayments as applicable. We do not make changes based on these comments.

One comment requested clarification of the proposed 18-month limitation to seek a refund from VA that would be established in § 17.106(c)(4), and whether a non-VA provider could seek such a refund from a veteran if the non-VA provider missed the 18-month window in which to seek a refund from VA. This comment further suggested including a rule to protect veterans from non-VA providers seeking refunds from veterans after the 18-month window. We clarify that the proposed regulatory changes would not establish a billing or payment relationship between a veteran and a non-VA provider or entity, as current § 17.106(c)(4) and the proposed

revision both relate to only the relationship between a third-party payer and VA in instances where VA has collected for the cost of nonservice-connected care provided in or through a VA facility where a veteran has private health insurance. The proposed 18-month timeframe would limit the amount of time a third-party insurance payer may seek a refund from VA, where VA has billed that insurer for nonservice-connected, and the insurer has assessed that it has overpaid VA for that care. As such, current § 17.106 and the revisions as proposed do not establish any payment relationship between a non-VA provider and a Veteran, and we otherwise reiterate from earlier in this preamble that veterans would not be responsible for the cost of non-VA care where such veterans are otherwise eligible for VA to pay for such care, except to the extent there may be applicable copayments for such care. We do not make changes based on this comment.

One comment raised multiple issues related to the proposed rule. The comment first asserted that the proposed rule would implement non-standard third-party billing and collection processes that have the potential to impact VA's efforts to create and maintain an integrated delivery system with community care. The comment more specifically stated that VA's practice of billing the higher of the charges determined pursuant to § 17.101 or the amount paid to the non-VA provider is unique to VA, inconsistent with industry practice, and unnecessarily puts VA into a payment and billing process when veterans with other health insurance receive nonservice-connected care from non-VA providers. We agree with the portion of the comment that the higher of language in § 17.101(a)(7) has presented challenges because it is not the industry standard practice, which is why we proposed to remove that language so that § 17.101 would provide that reasonable charges would be calculated only using the methodology set forth in § 17.101. To address the concern in this portion of the comment related to additional administrative burden for VA and for third-party payers, we reiterate from the proposed rule that removing the higher of language in § 17.101(a)(7) will reduce administrative burden by permitting VA to bill the rate determined using the methodologies set forth in § 17.101 (those methodologies that calculate charges as if the care was provided at a VA facility), which will provide greater clarity and uniformity in VA's billing practices. Revising § 17.101(a)(7) such that VA charges the same rate regardless of whether the care was provided at a VA facility or a non-VA facility at VA expense will cut down on the administrative burden associated with determining the charges. 84 FR 57668, 57669. We also reiterate from the proposed rule that it is equitable to charge the same rates regardless of the facility in which the individual sought treatment, and the proposed revision is beneficial to the third-party payer as there is no scenario in which the third-party payer would be charged more under the proposed rule than they are charged under the current rule. 84 FR 57668, 57669. We believe the other statements in this portion of the comment similarly misread other changes being made in the proposed rule, and mistook that VA is not the first-party payor with regards to the non-VA care discussed in the proposed rule. We clarify that where VA is otherwise responsible for furnishing care to veterans, and such veterans are eligible to receive non-VA care in the community, VA remains the first party payer and is authorized under 38 U.S.C. 1729 to bill and collect reasonable charges for nonservice-connected care where such veterans have other private health insurance. Therefore, the proposed rule does not create a non-standard third-party billing and collection process when veterans with other health insurance receive nonservice-connected care from non-VA providers at VA expense. We do not make changes based on this portion of the comment.

The comment next asserted that the proposed rule may result in the amounts that VA collects from third-party insurers for non-VA care furnished in the community being significantly more than what VA pays non-VA providers to furnish such care. In support of this statement, the comment more specifically noted that there is a discrepancy between: The methodology outlined in 38 CFR 17.101 where charges are weighted at the 80th percentile of nationwide charges; and VA's payments of applicable Medicare fee schedules or prospective payment system amounts for non-VA care in the community, where the comment asserted that such Medicare rates were weighted at approximately 23 percent of nationwide charges. This portion of the comment also noted that the pricing methodologies in § 17.101 needed to be generally reviewed to incorporate the price transparency requirements of the Affordable Care Act and other efforts related to price transparency undertaken by the Centers for Medicare and Medicaid Services, as well as to be consistent with VA's efforts to conduct market cost assessments under section 106 of Public Law 115–182. Ultimately, we believe that this portion of the comment is beyond the scope of the proposed rule, as § 17.101 has long established use of the 80th percentile of nationwide charges in a number of its methodologies, and this was not a new change in the proposed rule.

Similarly, the proposed rule did not raise the issue of VA's payment to non-VA providers for the furnishing of care in the community, or how VA authorizes the provision of such care; rather, the rulemaking concerned how VA bills third parties. Nor did the proposed rule raise more general review of the reasonable charges methodologies in § 17.101 at large. However, we generally respond to this portion of the comment that VA's payment to non-VA providers for care furnished in the community is controlled by 38 U.S.C. 1703(i) and 38 CFR 17.4035. Such payments are not impacted by what VA bills to third party payers for non-VA care where veterans have private health insurance under section 1729 and § 17.101. Payments for care in the community and billing of third-party payers for non-VA care are distinct from one another and conducted pursuant to distinct statutory and regulatory authorities. We also do not see any link between VA's conducting of market analyses under section 106 of Public Law 115–182 and VA's reasonable charge methodologies in § 17.101. We do not make any changes based on this portion of the comment.

The comment next expressed concern regarding the proposed addition of new § 17.106(f)(2)(viii) to state that a provision in a third-party payer's plan that directs payment for care or services be refused or lessened because the billing is not presented in accordance with a specified methodology (such as a line item methodology) is not by itself a permissible ground for refusing or reducing third-party payment of the charges billed by VA. The comment asserted that VA's example of its per diem billing methods as being different from some third-party insurer's line item methods was not a sufficient rationale for this revision, and further that VA's per diem methodology would result in bundled billing practices that could leave third-party insurers in the position to be charged and pay for service-connected care as well as nonservice-connected care. VA's example of its per diem billing methodologies as provided in the proposed rule is only one type of practice that may differ from third-party

billing practices, although we reiterate that even this one example is sufficient rationale to support the proposed revision of § 17.106(f)(2) because this difference in billing methodologies has resulted in some third-party payers refusing to pay part or all of the charges for VA care or medical services. When a third-party payer's plan has provisions that have the effect of excluding from coverage or limited payment for certain care if such care is provided in or through any VA facility, VA is authorized under 38 U.S.C. 1729(f) to implement measures to ensure that such provisions do not operate to prevent collection by the United States. 84 FR 57668, 57674. Regarding the statement in this portion of the comment related to bundling of services in VA's per diem methodologies, we clarify that VA's per diem methodologies do not provide for the comingling of billing charges for both nonservice-connected care and service-connected care, as 38 U.S.C. 1729 only permits assessment for reasonable charges for nonservice-connected care. We do not make changes based on this portion of the comment.

VA makes multiple nonsubstantive changes from the proposed rule, none of which are based on public comment. First, VA replaces the term Optum Essential every time it was proposed to appear in § 17.101 (see 84 FR 57668, 57670) with the term Medicare ASP Pricing. This change is required because the Optum Essential data set has become unavailable to VA since publication of the proposed rule. Similar to Optum Essential, the Medical ASP Pricing data set is a longstanding and publicly available dataset associated with Centers for Medicare and Medicaid Billing, with similar data elements. Next, VA renumbers § 17.106(f)(2)(viii) as proposed to § 17.106(f)(2)(ix) in this final rule, to correct a discrepancy in drafting with another recently published VA rulemaking (AQ68), where AQ68 has already added a new § 17.106(f)(2)(viii) (see 85 FR 53173). We also correct an inadvertent omission of language from § 17.101(f)(3) as proposed, related to explanation in paragraph (f)(3) that CPT/CHPCS codes are statistically selected and weighted so as to give a weighted average RVU comparable to the weighted average RVU of the entire CPT/HCPCS code group. This explanatory language existed in § 17.101(f)(3) prior to the proposed rule and was followed by additional parenthetical explanation that the selected CPT/HCPCS codes are set forth in the Milliman USA, Inc., Health Cost Guidelines fee survey. When we proposed to change the term ''Milliman USA, Inc.'' to ''Milliman, Inc.'' in § 17.101(f)(3), we failed to transcribe the additional explanatory language as described above, and now correct that error by reinserting in paragraph (f)(3) language that representative CPT/CHPCS codes are statistically selected and weighted so as to give a weighted average RVU comparable to the weighted average RVU of the entire CPT/HCPCS code group (the selected CPT/HCPCS codes are set forth in the Milliman, Inc., Health Cost Guidelines fee survey). We correct a similar omission in § 17.101(i)(3) as proposed, to now reinsert parenthetical language that ''(the selected CPT/HCPCS codes are set forth in the Milliman, Inc., Health Cost Guidelines fee survey).'' We additionally correct a similar omission in § 17.101(l)(3) as proposed to now reinsert language related to Milliman data sets, to read ''; and Milliman, Inc., Optimized HMO (Health Maintenance Organization) Data Sets (*see* paragraph (a)(3) of this section for Data Sources).''

For the reasons stated in the preamble of this rule, VA makes nonsubstantive changes from the proposed rule.

Executive Orders 12866 and 13563

Executive Orders 12866 and 13563 direct agencies to assess the costs and benefits of available regulatory alternatives and, when regulation is necessary, to select regulatory approaches that maximize net benefits (including potential economic, environmental, public health and safety effects, and other advantages; distributive impacts; and equity). Executive Order 13563 (Improving Regulation and Regulatory Review) emphasizes the importance of quantifying both costs and benefits, reducing costs, harmonizing rules, and promoting flexibility. The Office of Information and Regulatory Affairs has determined that this rule is not a significant regulatory action under Executive Order 12866.

VA's regulatory impact analysis can be found as a supporting document at *http://www.regulations.gov*, usually within 48 hours after the rulemaking document is published. Additionally, a copy of the rulemaking and its impact analysis are available on VA's website at *http://www.va.gov/orpm* by following the link for VA Regulations Published from FY 2004 through FYTD.

Regulatory Flexibility Act

The Secretary hereby certifies that this rule will not have a significant economic impact on a substantial number of small entities as they are defined in the Regulatory Flexibility Act, 5 U.S.C. 601–612. We identified that 400 out of 745 third-party payers would qualify as small entities pursuant to the revenue threshold established by NAICS code 524114 (Direct Health and Medical Insurance Carriers) to be affected by changes in § 17.101 of this rule. The number of 400 was derived by assuming potential effects on all entities that fell below the applicable revenue threshold, without further numeric breakout. Although this 400 number is greater than 1 percent of the 745 total entities, the changes in § 17.101 of this rule do not impose any new requirements that create a significant economic impact, as these changes do not result in new or changed fees or significant changes in any permissible charges. The changes made in § 17.101 related to revising, adding, or removing definitions are technical in nature and conform to existing statutory requirements and existing practices in the program. Similarly, the change made in § 17.101 related to only using the reasonable charges methodology set forth in 17.101 conforms to existing statutory authority and is the clearer and more uniform calculation method, which will not require any additional training for the small entities to understand.

We further identified that 39 out of 745 third-party payers would qualify as small entities pursuant to the revenue thresholds established by NAICS code 524114 (Direct Health and Medical Insurance Carriers) to be affected by changes in § 17.106 of this rule related to the 18-month timeframe in which to submit a request for a refund. The number 39 was derived from VA's examination of its Consolidated Patient Account Center (CPAC) data pertaining to the amount of refund requests received in fiscal year 2019 where such requests were received after 18 months. We believe this number 39 is appropriate for the specific change in § 17.106 (versus the more general 400 number for the changes in § 17.101) because it is our experience that entities generally do not wish to wait as long as or beyond 18 months to submit refund requests. Although this 39 number is greater than 1 percent of the 745 total entities, the average impact on such small entities would be $385 per entity (based on VA's examination of its fiscal year 2019 CPAC data), which also will not create a significant economic impact. Therefore, pursuant to 5 U.S.C. 605(b), the initial and final regulatory flexibility analysis requirements of 5 U.S.C. 603 and 604 do not apply.

Unfunded Mandates

The Unfunded Mandates Reform Act of 1995 requires, at 2 U.S.C. 1532, that agencies prepare an assessment of anticipated costs and benefits before issuing any rule that may result in the expenditure by State, local, and tribal governments, in the aggregate, or by the private sector, of $100 million or more (adjusted annually for inflation) in any one year. This final rule will have no such effect on State, local, and tribal governments, or on the private sector.

Paperwork Reduction Act

The Paperwork Reduction Act of 1995 (44 U.S.C. 3507) requires that VA consider the impact of paperwork and other information collection burdens imposed on the public. Except for emergency approvals under 44 U.S.C. 3507(j), VA may not conduct or sponsor, and a person is not required to respond to, a collection of information unless it displays a currently valid OMB control number. Although this rule contains a provision constituting a collection of information, at 38 CFR 17.101, no new or modified collections of information are associated with this rule. The information collection provision for § 17.101 is currently approved by the Office of Management and Budget (OMB) and has been assigned OMB control number 2900–0606.

Congressional Review Act

Pursuant to the Congressional Review Act (5 U.S.C. 801 *et seq.*), the Office of Information and Regulatory Affairs designated this rule as not a major rule, as defined by 5 U.S.C. 804(2).

Catalog of Federal Domestic Assistance

The Catalog of Federal Domestic Assistance numbers and titles for the programs affected by this document are 64.008, Veterans Domiciliary Care; 64.011, Veterans Dental Care; 64.012, Veterans Prescription Service; 64.013, Veterans Prosthetic Appliances; 64.014, Veterans State Domiciliary Care; 64.015, Veterans State Nursing Home Care; 64.029—Purchase Care Program; 64.033—VA Supportive Services for Veteran Families Program; 64.034—VA Grants for Adaptive Sports Programs for Disabled Veterans and Disabled Members of the Armed Forces; 64.035—Veterans Transportation Program; 64.039—CHAMPVA; 64.040—VHA Inpatient Medicine; 64.041—VHA Outpatient Specialty Care; 64.042—VHA Inpatient Surgery; 64.043—VHA Mental Health Residential; 64.044—VHA Home Care; 64.045—VHA Outpatient Ancillary Services; 64.046—VHA Inpatient Psychiatry; 64.047—VHA Primary Care; 64.048—VHA Mental Health clinics; 64.049—VHA Community Living Center; 64.050—VHA Diagnostic Care.

List of Subjects in 38 CFR Part 17

Administrative practice and procedure, Alcohol abuse, Alcoholism, Claims, Day care, Dental health, Drug abuse, Foreign Relations, Government contracts, Grant programs-health, Grant programs-veterans, Health care, Health facilities, Health professions, Health records, Homeless, Medical and dental schools, Medical devices, Medical research, Mental health programs, Nursing home care, Philippines, Reporting and recordkeeping requirements, Scholarships and fellows, Travel, Transportation expenses, Veterans.

Signing Authority

The Secretary of Veterans Affairs approved this document on March 12, 2021 and authorized the undersigned to sign and submit the document to the Office of the Federal Register for publication electronically as an official document of the Department of Veterans Affairs.

Consuela Benjamin,

Regulations Development Coordinator, Office of Regulation Policy & Management, Office of the Secretary, Department of Veterans Affairs.

For the reasons stated in the preamble, the Department of Veterans Affairs amends 38 CFR part 17 as follows:

PART 17—MEDICAL

■ 1. The general authority citation for part 17 continues, and an entry for § 17.101 is added in numerical order, to read as follows:

Authority: 38 U.S.C. 501, and as noted in specific sections.

* * * * *

Section 17.101 is also issued under 38 U.S.C. 101, 1701, 1705, 1710, 1721, 1722, 1729.

* * * * *

■ 2. Amend 17.101 as follows:

■ a. In paragraph (a)(5), add definitions for ''FAIR Health'' and ''MarketScan'' in alphabetical order and remove the definition of ''MDR'';;

■ b. Revise paragraphs (a)(7), (f)(2)(ii), (f)(3) introductory text, (h)(2) introductory text, (h)(2)(i) and (ii), (h)(3), (i)(2)(ii), (i)(3) introductory text, (l)(3) introductory text, and (l)(3)(ii); and

■ c. In the following table, for each paragraph indicated in the left column, remove the words indicated in the middle column from wherever it appears in the paragraph, and add in their place the words indicated in the right column.

Paragraph	Remove	Add
(a)(2) and (3)	Chief Business Office	Office of Community Care.
(a)(2) and (3)	*http://www.va.gov/cbo,* under ''Charge Data.''	*https://www.va.gov/COMMUNITYCARE,* under ''Payer Rates and Charges.''
(l)(2)(i)(A), (B), and (M)	Ingenix/St. Anthony's	Medicare ASP Pricing.
(e)(3)(ii), (e)(4), (g)(3)(i), (i)(2)(i), (l)(2)(iii), (l)(5)(ii).	MDR	FAIR Health.
(b)(2) introductory text, (b)(3), (e)(3)(ii)	MedStat	MarketScan.
(e)(4), (g)(3)(i), (l)(5)(iii)	Milliman USA, Inc	Milliman, Inc.
(d)(2) introductory text, (e)(3)(i) introductory text, (e)(3)(i)(A) and (B), (e)(3)(ii), (f)(4), (g)(3)(i), (j)(2)(i), (k)(2)(i) and (ii), (l)(5)(ii).	percent Sample	Percent Sample.
(e)(3)(i)(C)	2.0	6.5.
(e)(3)(i)(C)	6.5	2.0.

The additions and revisions read as follows:

§ 17.101 Collection or recovery by VA for medical care or services provided or furnished to a veteran for a nonservice-connected disability.

* * * * *

(a) * * *

(5) * * *

FAIR Health means any of the Fair Health Charge Benchmarks products developed by Fair Health.

* * * * *

MarketScan means the MarketScan Commercial Claims & Encounters Database developed by Truven Health Analytics LLC.

* * * * *

(7) *Charges for medical care or services provided by non-VA providers at VA expense.* When medical care or services are furnished at the expense of the VA by non-VA providers, the charges billed for such care or services will be the charges determined according to this section.

* * * * *

(f) * * *

(2) * * *

(ii) *RVUs for CPT/HCPCS codes that do not have Medicare RVUs and are not designated as unlisted procedures.* For CPT/HCPCS codes that are not assigned RVUs in paragraph (f)(2)(i) or (iii) of this section, total RVUs are developed based on various charge data sources. For these CPT/HCPCS codes, that nationwide 80th percentile billed charges are obtained, where statistically credible, from the FAIR Health database. For any remaining CPT/HCPCS codes, the nationwide 80th percentile billed charges are obtained, where statistically credible, from the Part B component of the Medicare Standard Analytical File 5 Percent Sample. For each of these CPT/HCPCS codes, nationwide total RVUs are obtained by taking the nationwide 80th percentile billed charges obtained using the preceding databases and dividing by the nationwide conversion factor for the corresponding CPT/HCPCS code group determined pursuant to paragraphs (f)(3) introductory text and (f)(3)(i) of this section. For any remaining CPT/HCPCS codes that have not been assigned RVUs using the preceding data sources, the nationwide total RVUs are calculated by summing the work expense and non-facility practice expense RVUs found in Medicare ASP Pricing RBRVS. The resulting nationwide total RVUs obtained using these data sources are multiplied by the geographic area adjustment factors determined pursuant to paragraph (f)(2)(iv) of this section to obtain the area-specific total RVUs.

* * * * *

(3) *Geographically-adjusted 80th percentile conversion factors.* CPT/HCPCS codes are separated into the following 23 CPT/HCPCS code groups: Allergy immunotherapy, allergy testing, cardiovascular, chiropractor, consults, emergency room visits and observation care, hearing/speech exams, immunizations, inpatient visits, maternity/cesarean deliveries, maternity/non-deliveries, maternity/normal deliveries, miscellaneous medical, office/home/urgent care visits, outpatient psychiatry/alcohol and drug abuse, pathology, physical exams, physical medicine, radiology, surgery, therapeutic injections, vision exams, and well-baby exams. For each of the 23 CPT/HCPCS code groups, representative CPT/HCPCS codes are statistically selected and weighted so as to give a weighted average RVU comparable to the weighted average RVU of the entire CPT/HCPCS code group (the selected CPT/HCPCS codes are set forth in the Milliman, Inc., Health Cost Guidelines fee survey); see paragraph (a)(3) of this section for Data Sources. The 80th percentile charge for each selected CPT/HCPCS code is obtained from the FAIR Health database. A nationwide conversion factor (a monetary amount) is calculated for each CPT/HCPCS code group as set forth in paragraph (f)(3)(i) of this section. The nationwide conversion factors for each of the 23 CPT/HCPCS code groups are trended forward to the effective time period for the charges, as set forth in paragraph (f)(3)(ii) of this section. The resulting amounts for each of the 23 groups are multiplied by geographic area adjustment factors determined pursuant to paragraph (f)(3)(iii) of this section, resulting in geographically-adjusted 80th percentile conversion factors for each geographic area for the 23 CPT/HCPCS code groups for the effective charge period.

* * * * *

(h) * * *

(2) *Nationwide 80th percentile charges by HCPCS code.* For each HCPCS dental code, 80th percentile charges are extracted from various independent data sources, including the National Dental Advisory Service nationwide pricing index and the Dental FAIR Health module (*see* paragraph (a)(3) of this section for Data Sources). Charges for each database are then trended forward to a common date, based on actual changes to the dental services component of the CPI–U. Charges for each HCPCS dental code from each data source are combined into an average 80th percentile charge by means of the methodology set forth in paragraph (h)(2)(i) of this section. HCPCS dental codes designated as unlisted are assigned 80th percentile charges by means of the methodology set forth in paragraph (h)(2)(ii) of this section. Finally, the resulting amounts are each trended forward to the effective time period for the charges, as set forth in paragraph (h)(2)(iii) of this section. The results constitute the nationwide 80th percentile charge for each HCPCS dental code.

(i) *Averaging methodology.* The average charge for any particular HCPCS dental code is calculated by first computing a preliminary mean of the available charges for each code. Statistical outliers are identified and removed. In cases where none of the charges are removed, the average charge is calculated as a mean of all reported charges.

(ii) *Nationwide 80th percentile charges for HCPCS dental codes designated as unlisted procedures.* For HCPCS dental codes designated as unlisted procedures, 80th percentile charges are developed based on the weighted median 80th percentile charge of HCPCS dental codes within the series in which the unlisted procedure code occurs. A nationwide VA distribution of procedures and services is used for the purpose of computing the weighted median.

* * * * *

(3) *Geographic area adjustment factors.* A geographic adjustment factor (consisting of the ratio of the level of charges in a given geographic area *to* the nationwide level of charges) for each geographic area and dental class of service is obtained from Milliman Inc., Dental Health Cost Guidelines, a database of nationwide commercial insurance charges and relative costs; and a normalized geographic adjustment factor computed from the Dental FAIR Health module, as follows: Using local and nationwide average charges reported in the FAIR Health database, a local weighted average charge for each dental class of procedure codes is calculated using utilization frequencies from the Milliman Inc., Dental Health Cost Guidelines as weights (*see* paragraph (a)(3) of this section for Data Sources). Similarly, using nationwide average charge levels, a nationwide average charge by dental class of procedure codes is calculated. The normalized geographic adjustment factor for each dental class of procedure codes and for each geographic area is the ratio of the local average charge divided by the corresponding nationwide average charge. Finally, the geographic area adjustment factor is the arithmetic average of the corresponding factors from the data sources mentioned in the first sentence of this paragraph (h)(3).

(i) * * *

(2) * * *

(ii) *RVUs for CPT/HCPCS codes that do not have Medicare-based RVUs and*

are not designated as unlisted procedures. For CPT/HCPCS codes that are not assigned RVUs in paragraphs (i)(2)(i) or (iii) of this section, total RVUs are developed based on various charge data sources. For these CPT/HCPCS codes, the nationwide 80th percentile billed charges are obtained, where statistically credible, from the FAIR Health database. For any remaining CPT/HCPCS codes, the nationwide 80th percentile billed charges are obtained, where statistically credible, from the Part B component of the Medicare Standard Analytical File 5 Percent Sample. For any remaining CPT/HCPCS codes that have not been assigned RVUs using the preceding data sources, the nationwide total RVUs are calculated by summing the work expense and non-facility practice expense RVUs found in Medicare ASP Pricing RBRVS. The resulting nationwide total RVUs obtained using these data sources are multiplied by the geographic area adjustment factors determined pursuant to paragraph (i)(2)(iv) of this section to obtain the area-specific total RVUs.

* * * * *

(3) *Geographically-adjusted 80th percentile conversion factors.* Representative CPT/HCPCS codes are statistically selected and weighted so as to give a weighted average RVU comparable to the weighted average RVU of the entire pathology/laboratory CPT/HCPCS code group (the selected CPT/HCPCS codes are set forth in the Milliman, Inc., Health Cost Guidelines fee survey). The 80th percentile charge for each selected CPT/HCPCS code is obtained from the FAIR Health database. A nationwide conversion factor (a monetary amount) is calculated as set forth in paragraph (i)(3)(i) of this section. The nationwide conversion factor is trended forward to the effective time period for the charges, as set forth in paragraph (i)(3)(ii) of this section. The resulting amount is multiplied by a geographic area adjustment factor determined pursuant to paragraph (i)(3)(iv) of this section, resulting in the geographically-adjusted 80th percentile conversion factor for the effective charge period.

* * * * *

(l) * * *

(3) *Nationwide 80th percentile charges for HCPCS codes without RVUs.* For each applicable HCPCS code, 80th percentile charges are extracted from two independent data sources: The FAIR Health database and the combined Part B and DME components of the Medicare Standard Analytical File 5 Percent Sample; and Milliman, Inc., Optimized HMO (Health Maintenance Organization) Data Sets (*see* paragraph (a)(3) of this section for Data Sources). Charges from each database are then trended forward to the effective time period for the charges, as set forth in paragraph (l)(3)(i) of this section. Charges for each HCPCS code from each data source are combined into an average 80th percentile charge by means of the methodology set forth in paragraph (l)(3)(ii) of this section. The results constitute the nationwide 80th percentile charge for each applicable HCPCS code.

* * * * *

(ii) *Averaging methodology.* The average 80th percentile trended charge for any particular HCPCS code is calculated by first computing a preliminary mean of the available charges for each HCPCS code. Statistical outliers are identified and removed. In cases where none of the charges are removed, the average charge is calculated as a mean of all reported charges.

* * * * *

■ 4. Amend § 17.106 by revising paragraph (c)(4) and adding paragraph (f)(2)(ix) to read as follows:

§ 17.106 VA collection rules; third-party payers.

* * * * *

(c) * * *

(4) A third-party payer may not, without the consent of a U.S. Government official authorized to take action under 38 U.S.C. 1729 and this part, offset or reduce any payment due under 38 U.S.C. 1729 or this part on the grounds that the payer considers itself due a refund from a VA facility. A written request for a refund must be submitted within 18 months from the original payment date and adjudicated separately from any other claims submitted to the third-party payer under 38 U.S.C. 1729 or this part. If third-party payers do not submit requests for a refund within this 18-month time frame, VA will not provide a refund to third-party payers for a paid claim for any reason.

* * * * *

(f) * * *

(2) * * *

(ix) A provision in a third-party payer's plan that directs payment for care or services be refused or lessened because the billing is not presented in accordance with a specified methodology (such as a line item methodology) is not by itself a permissible ground for refusing or reducing third-party payment.

* * * * *

[FR Doc. 2021–05717 Filed 3–25–21; 8:45 am]

BILLING CODE 8320–01–P

ENVIRONMENTAL PROTECTION AGENCY

40 CFR Part 81

[EPA–HQ–OAR–2020–0037; FRL–10018–96–OAR]

RIN 2060–AU61

Air Quality Designations for the 2010 Primary Sulfur Dioxide (SO_2) National Ambient Air Quality Standard—Round 4

AGENCY: Environmental Protection Agency (EPA).

ACTION: Final rule.

SUMMARY: This final rule establishes the initial air quality designations for certain areas in the United States (U.S.) for the 2010 primary sulfur dioxide (SO_2) National Ambient Air Quality Standard (NAAQS). The Environmental Protection Agency (EPA) is designating the areas as either nonattainment, attainment/unclassifiable, or unclassifiable. The designations are based on application of the EPA's nationwide analytical approach and technical analysis, including evaluation of monitoring data and air quality modeling, to determine the appropriate designation and area boundary based on the weight of evidence for each area. The Clean Air Act (CAA or Act) directs areas designated as nonattainment to undertake certain planning and pollution control activities to attain the SO_2 NAAQS as expeditiously as practicable. This is the fourth and final set of actions to designate areas of the U.S. for the 2010 SO_2 NAAQS; there are no remaining undesignated areas in the U.S. for the 2010 SO_2 NAAQS.

DATES: The final rule is effective on April 30, 2021.

ADDRESSES: The EPA has established a public docket for these SO_2 designations at *https://www.regulations.gov* under Docket ID No. EPA–HQ–OAR–2020–0037.[1] Although listed in the docket index, some information is not publicly available, *e.g.,* Confidential Business Information or other information whose disclosure is restricted by statute. Certain other material, such as

[1] The *https://www.regulations.gov* platform is in the process of being upgraded. Users may be automatically redirected to *https://beta.regulations.gov*. Both website addresses contain the same information.

copyrighted material, is not placed on the internet and will be publicly available only in hard copy form.

Out of an abundance of caution for members of the public and our staff, the EPA Docket Center and Reading Room are currently closed to the public, with limited exceptions, to reduce the risk of transmitting COVID–19. The Docket Center staff will continue to provide remote customer service via email, phone, and webform. For further information on EPA Docket Center services and the current status, please visit us online at *https://www.epa.gov/dockets.*

FOR FURTHER INFORMATION CONTACT: For general questions concerning this action, please contact Corey Mocka, U.S. Environmental Protection Agency, Office of Air Quality Planning and Standards, Air Quality Policy Division, 109 T.W. Alexander Drive, Mail Code C539–04, Research Triangle Park, NC 27711; telephone: (919) 541–5142; email address: *mocka.corey@epa.gov.* The following EPA contacts can answer questions regarding areas in a particular EPA Regional office:

Region 2—Marina Castro, telephone (212) 637–3713, email at *castro.marina@epa.gov.*

Region 3—Megan Goold, telephone (215) 814–2027, email at *goold.megan@epa.gov.*

Region 4—Twunjala Bradley, telephone (404) 562–9352, email at *bradley.twunjala@epa.gov.*

Region 5—Alisa Liu, telephone (312) 353–3193, email at *liu.alisa@epa.gov.*

Region 6—Robert Imhoff, telephone (214) 665–7262, email at *imhoff.robert@epa.gov.*

Region 7—William Stone, telephone (913) 551–7714, email at *stone.william@epa.gov.*

Region 8—Rebecca Matichuk, telephone (303) 312–6867, email at *matichuk.rebecca@epa.gov.*

Region 9—Ashley Graham, telephone (415) 972–3877, email at *graham.ashleyr@epa.gov.*

Region 10—John Chi, telephone (206) 553–1185, email at *chi.john@epa.gov.*

Regional offices	Affected state(s)
EPA Region 2—Air Programs Branch, 290 Broadway, 25th Floor, New York, NY 10007	New York.
EPA Region 3—Planning & Implementation Branch, 1650 Arch Street, Philadelphia, PA 19103	Maryland, Pennsylvania, Virginia, and West Virginia.
EPA Region 4—Air Planning & Implementation Branch, Sam Nunn Atlanta Federal Center, 61 Forsyth Street SW, 12th Floor, Atlanta, GA 30303.	Alabama, Georgia, Kentucky, and North Carolina.
EPA Region 5—Air Programs Branch, Air & Radiation Division (AR–18J), 77 West Jackson Blvd., Chicago, IL 60604.	Illinois, Indiana, and Wisconsin.
EPA Region 6—State Planning & Implementation Branch, 1201 Elm Street, Dallas, TX 75270	Louisiana, Oklahoma, and Texas.
EPA Region 7—Air Quality Planning Branch, 11201 Renner Blvd., Lenexa, KS 66219	Missouri and Nebraska.
EPA Region 8—Air and Radiation Division, Air Toxics, Radiation, & Modeling Branch, 1595 Wynkoop Street, Denver, CO 80202.	North Dakota and Wyoming.
EPA Region 9—Air Planning Branch, 75 Hawthorne Street, San Francisco, CA 94105	Hawaii.
EPA Region 10—Air Planning & State/Tribal Coordinations Branch, 1200 Sixth Avenue, Mail Code OAQ–107, Seattle, WA 98101.	Washington.

Most EPA offices are closed to reduce the risk of transmitting COVID–19, but staff remain available via telephone and email. The EPA encourages the public to review information related to the Round 4 2010 SO_2 NAAQS designations online at *https://www.epa.gov/sulfur-dioxide-designations* and also in the public docket at *https://www.regulations.gov* under Docket ID No. EPA–HQ–OAR–2020–0037.

SUPPLEMENTARY INFORMATION:

Table of Contents

The following is an outline of the Preamble.

I. Preamble Glossary of Terms and Acronyms
II. What is the purpose of this action?
III. What is the 2010 SO_2 NAAQS and what are the health concerns that it addresses?
IV. What are the CAA requirements for air quality designations and what action has the EPA taken to meet these requirements?
V. What guidance did the EPA issue and how did the EPA apply the statutory requirements to determine area designations and boundaries?
VI. What air quality information has the EPA used for these designations?
VII. How do the Round 4 designations affect areas of Indian country?
VIII. Where can I find information forming the basis for this rule and exchanges between the EPA, states, and tribes related to this rule?
IX. Environmental Justice Concerns
X. Statutory and Executive Order Reviews
A. Executive Order 12866: Regulatory Planning and Review and Executive Order 13563: Improving Regulation and Regulatory Review
B. Executive Order 13771: Reducing Regulations and Controlling Regulatory Costs
C. Paperwork Reduction Act (PRA)
D. Regulatory Flexibility Act (RFA)
E. Unfunded Mandates Reform Act (UMRA)
F. Executive Order 13132: Federalism
G. Executive Order 13175: Consultation and Coordination With Indian Tribal Government.
H. Executive Order 13045: Protection of Children From Environmental Health and Safety Risks
I. Executive Order 13211: Actions That Significantly Affect Energy Supply, Distribution or Use
J. National Technology Transfer and Advancement Act (NTTAA)
K. Executive Order 12898: Federal Actions To Address Environmental Justice in Minority Populations and Low-Income Populations
L. Congressional Review Act (CRA)
M. Judicial Review

I. Preamble Glossary of Terms and Acronyms

The following are abbreviations of terms used in the preamble.

APA Administrative Procedure Act
CAA Clean Air Act
CFR Code of Federal Regulations
CRA Congressional Review Act
DC District of Columbia
DRR Data Requirements Rule
EPA Environmental Protection Agency
FR Federal Register
NAAQS National Ambient Air Quality Standards
NTTAA National Technology Transfer and Advancement Act
ppb Parts per billion
PRA Paperwork Reduction Act
RFA Regulatory Flexibility Act
SIP State Implementation Plan
SO_2 Sulfur Dioxide
TAR Tribal Authority Rule
TSD Technical Support Document
UMRA Unfunded Mandate Reform Act
U.S. United States

II. What is the purpose of this action?

The purpose of this final action is to announce and promulgate initial air quality designations for certain areas in the U.S. for the 2010 SO_2 NAAQS, in accordance with the requirements of the CAA. The EPA is designating areas as either nonattainment, attainment/

unclassifiable, or unclassifiable, as defined in Section IV of this action, and based on evaluating any available information that was timely received, including (but not limited to) appropriate monitoring data and modeling analyses.

On June 2, 2010, the EPA Administrator signed a final rule that revised the primary SO_2 NAAQS (75 FR 35520; June 22, 2010) after review of the existing primary SO_2 standards promulgated on April 30, 1971 (36 FR 8187). The EPA established the revised primary SO_2 NAAQS at 75 parts per billion (ppb) which is attained when the 3-year average of the annual 99th percentile of daily maximum 1-hour average concentrations of SO_2 does not exceed 75 ppb.

The process for designating areas following promulgation of a new or revised NAAQS is contained in the CAA section 107(d) (42 U.S.C. 7407(d)). After promulgation of a new or revised NAAQS, each governor shall recommend air quality designations, including the appropriate boundaries for nonattainment areas, to the EPA.[2] The EPA considers these recommendations as part of its duty to promulgate the formal area designations and boundaries for the new or revised NAAQS. By no later than 120 days prior to promulgating designations, the EPA is required to notify states, territories, and tribes, as appropriate, of any intended modifications to an area designation or boundary recommendation that the EPA deems necessary.

After invoking a 1-year extension of the deadlines to designate areas, as provided for in section 107 of the Act, the EPA completed an initial round of SO_2 designations for certain areas of the country on July 25, 2013 (referred to as ''Round 1'').[3] Following the initial designations, three lawsuits were filed against the EPA in different U.S. District Courts, alleging the agency had failed to perform a nondiscretionary duty under the CAA by not designating all portions of the country by the June 2, 2013, deadline. In one of those cases, on March 2, 2015, the U.S. District Court for the Northern District of California entered an enforceable order for the EPA to complete the area designations by three specific deadlines according to the court-ordered schedule.[4]

To meet the first court-ordered deadline, the Administrator signed final actions on June 30, 2016, and November 29, 2016, (collectively referred to as ''Round 2'') designating additional areas.[5] To meet the second deadline of the court-ordered schedule, the Administrator signed final actions on December 21, 2017, and March 28, 2018, (collectively referred to as ''Round 3'') designating most of the remaining areas of the country.[6] Finally, the EPA is under a December 31, 2020, court-ordered deadline, the final of the three deadlines established by the court, to designate all remaining undesignated areas (collectively referred to as ''Round 4'' or the ''final round''). These remaining undesignated areas are: (1) Those areas which, under the court order, did not meet the criteria that required designation in Round 2 and also were not required to be designated in Round 3 due to installation and operation of a new SO_2 monitoring network by January 2017 in the area meeting EPA's specifications referenced in EPA's SO_2 Data Requirements Rule (DRR);[7] and (2) those areas which EPA has not otherwise previously designated for the 2010 SO_2 NAAQS. With the completion of Round 4, there are no remaining undesignated areas for the 2010 SO_2 NAAQS.

On or about August 13, 2020, consistent with section 107(d)(1)(b)(ii) of the CAA, the EPA notified affected states of its intended designation of certain specific areas as either nonattainment, attainment/unclassifiable, or unclassifiable for the 2010 SO_2 NAAQS. These states then had the opportunity to demonstrate why they believed an intended modification of their original (or updated) recommendations by the EPA may be inappropriate. Although not required under the CAA, the EPA also chose to provide an opportunity for members of the public to comment on the EPA's August 2020 intended designations, as the EPA had done for the first, second, and third rounds of SO_2 designations. The EPA published a notice of availability and public comment period for the Round 4 intended designations on August 21, 2020 (85 FR 51694), and the public comment period closed on September 21, 2020.

The final Round 4 2010 SO_2 NAAQS designations and the boundaries of each area appear in the tables for each state within the regulatory text at the end of this document. State recommendations, EPA's August 2020 designation notification letters, and the subsequent state and public comments, are available in the public docket for these SO_2 designations at *https://www.regulations.gov* under Docket ID No. EPA–HQ–OAR–2020–0037. As described in Section VI of this action, the EPA may consider early certified 2018–2020 monitoring data that may be submitted to the appropriate EPA Regional office by February 15, 2021.

For the areas being designated nonattainment, the CAA directs states to develop and submit State Implementation Plans (SIPs) to the EPA within 18 months of the effective date of this final rule, that meet the requirements of sections 172(c) and 191–192 of the CAA and provide for attainment of the NAAQS as expeditiously as practicable, but not later than 5 years from the effective date of final designation.

III. What is the 2010 SO_2 NAAQS and what are the health concerns that it addresses?

The EPA revised the primary SO_2 NAAQS in a final rule published in the **Federal Register** on June 22, 2010 (75 FR 35520), which became effective on August 23, 2010.[8] Based on review of the air quality criteria for oxides of sulfur and the primary NAAQS for oxides of sulfur as measured by SO_2, the EPA revised the primary SO_2 NAAQS to provide requisite protection of public health with an adequate margin of safety. Specifically, the EPA established a new 1-hour SO_2 standard at a level of 75 ppb, which is met at an ambient air quality monitoring site when the 3-year average of the annual 99th percentile of daily maximum 1-hour average concentrations is less than or equal to 75 ppb, as determined in accordance with Appendix T of 40 CFR part 50, 40 CFR 50.17(a) and (b). The EPA also established provisions to revoke both the existing 24-hour and annual primary

[2] Tribes are invited to submit recommendations following promulgation of a new or revised NAAQS but are not required to do so.

[3] A total of 29 areas throughout the U.S. were designated in this action published on August 5, 2013 (78 FR 47191). The EPA designated all 29 areas nonattainment based on violating monitored SO_2 concentrations from Federal Reference Method and Federal Equivalent Method monitors that are sited and operated in accordance with 40 CFR parts 50 and 58 and did not at that time designate any other areas.

[4] *Sierra Club* v. *McCarthy,* No. 3–13–cv–3953 (SI) (N.D. Cal. March 2, 2015).

[5] A total of 65 areas throughout the U.S. were designated in these actions published on July 12, 2016 (81 FR 45039), and December 13, 2016 (81 FR 89870). Of these 65 areas, seven were designated nonattainment.

[6] Most remaining areas of the U.S. were designated in actions published on January 9, 2018 (83 FR 1098) and April 5, 2018 (83 FR 14597). Of these areas, six were designated nonattainment.

[7] *See* 80 FR 51052 (August 21, 2015), codified at 40 CFR part 51, subpart BB.

[8] Based on the EPA's review of the air quality criteria addressing human health effects and the primary NAAQS for SO_2, the agency took final action to retain the current standard without revision in a final action published in the **Federal Register** on March 18, 2019 (52 FR 9866).

SO_2 standards, subject to certain conditions, 40 CFR 50.4(e).

Current scientific evidence links short-term exposures to SO_2, ranging from 5 minutes to 24 hours, with an array of adverse respiratory effects including bronchoconstriction and increased asthma symptoms. These effects are particularly important for asthmatics at elevated ventilation rates (*e.g.,* while exercising or playing). Studies also show a connection between short-term exposure and increased visits to emergency departments and hospital admissions for respiratory illnesses, particularly in at-risk populations including children, the elderly and asthmatics.

IV. What are the CAA requirements for air quality designations and what action has the EPA taken to meet these requirements?

After the EPA promulgates a new or revised NAAQS, the EPA is required to designate all areas of the country as either nonattainment, attainment, or unclassifiable, for that NAAQS pursuant to section 107(d)(1)–(2) of the CAA. As part of these Round 4 designations, the EPA is implementing its interpretation of statutory terms under CAA section 107(d) nationwide and is basing these designations on the EPA's nationwide analytical approach and technical analysis, including evaluation of monitoring data and air quality modeling, applied to the available evidence that was timely received for each area.

Regarding statutory definitions and the EPA's interpretations of such, section 107(d)(1)(A)(i) of the CAA defines a *nonattainment* area as an area that does not meet the NAAQS or that contributes to a nearby area that does not meet the NAAQS. An *attainment* area is defined by the CAA as any area that meets the NAAQS and does not contribute to a nearby area that does not meet the NAAQS. *Unclassifiable* areas are defined by the CAA as those that cannot be classified on the basis of available information as meeting or not meeting the 2010 SO_2 NAAQS.

For the purpose of this action for the 2010 SO_2 NAAQS, the EPA has interpreted and applied the statutory definitions as follows. The EPA defines a *nonattainment* area as an area that, based on available information including (but not limited to) monitoring data and/or appropriate modeling analyses, EPA has determined either: (1) Does not meet the 2010 SO_2 NAAQS, or (2) contributes to ambient air quality in a nearby area that does not meet the 2010 SO_2 NAAQS.

In this action, an *attainment/unclassifiable* area is defined by the EPA as an area that, based on available information including (but not limited to) appropriate monitoring data and/or appropriate modeling analyses, EPA has determined meets the 2010 SO_2 NAAQS and does not likely contribute to ambient air quality in a nearby area that does not meet the 2010 SO_2 NAAQS.

In this action, an *unclassifiable area* is defined by the EPA as an area for which the available information does not allow the EPA to determine whether the area meets the definition of a nonattainment area or the definition of an attainment/unclassifiable area.

This nationwide analytical approach also includes but is not limited to: (1) EPA's interpretations of other terms in the context of Round 4 of the 2010 SO_2 NAAQS; (2) the appropriate basis for characterizing the air quality of an area; (3) the five-factor analysis (described in Section V of this action) to determine the boundaries for each air quality area under the NAAQS; and (4) the methodology for appropriately characterizing SO_2 air quality through monitoring or modeling.

The EPA notes that CAA section 107(d) provides the agency with discretion to determine how best to interpret the terms in the definition of a nonattainment area (*e.g.,* ''contributes to'' and ''nearby'') for a new or revised NAAQS, given considerations such as the nature of a specific pollutant, the types of sources that may contribute to violations, the form of the standards for the pollutant, and other relevant information. In particular, the EPA's position is that the statute does not require the agency to establish bright line tests or thresholds for what constitutes ''contribution'' or ''nearby'' for purposes of designations.[9]

Similarly, the EPA's position is that the statute permits the EPA to evaluate the appropriate application of the term ''area'' to include geographic areas based upon full or partial county boundaries, as may be appropriate for a particular NAAQS. For example, CAA section 107(d)(1)(B)(ii) explicitly provides that the EPA can make modifications to designation recommendations for an area ''or portions thereof,'' and under CAA section 107(d)(1)(B)(iv) a designation remains in effect for an area ''or portion thereof'' until the EPA redesignates it.

By no later than 1 year after the promulgation of a new or revised NAAQS, CAA section 107(d)(1)(A) provides that each state governor shall recommend air quality designations, including the appropriate boundaries for areas, to the EPA. The EPA reviews those recommendations and is authorized to make any modifications the Administrator deems necessary. The statute does not define the term ''necessary,'' but the EPA interprets this to authorize the Administrator to modify designations that did not meet the statutory requirements or were otherwise inconsistent with the facts or analysis deemed appropriate by the Administrator. If the EPA is considering modifications to a recommendation, we are required by CAA section 107(d)(1)(B)(ii) to notify the state of any such intended modifications not less than 120 days prior to our promulgation of the final designation. These notifications are commonly known as the ''120-day letters.'' During this period, if the state or territory does not agree with the EPA's proposed modification, it has an opportunity to respond to the EPA and to demonstrate why it believes the modification proposed by the EPA is inappropriate. If a state or territory fails to provide any recommendation for an area, in whole or in part, the EPA still must promulgate a designation that the Administrator deems appropriate, pursuant to CAA section 107(d)(1)(B)(ii). While CAA section 107(d) specifically addresses the designations process between the EPA and states and territories, the EPA intends to follow the same process to the extent practicable for tribes that submitted designation recommendations.

V. What guidance did the EPA issue and how did the EPA apply the statutory requirements to determine area designations and boundaries?

In the notice of proposed rulemaking for the revised SO_2 NAAQS (74 FR 64810; December 8, 2009), the EPA issued proposed guidance on our approach to implementing the standard, including our approach to initial area designations. The EPA solicited comment on that guidance and, in the notice of final rulemaking (75 FR 35520; June 22, 2010), provided further guidance concerning implementation of the standard and how to identify nonattainment areas and boundaries for the SO_2 NAAQS. Subsequently, on March 24, 2011, the EPA provided additional designations guidance to assist states with making their recommendations for area designations and boundaries.[10] The EPA also issued

[9] This view was confirmed in *Catawba County* v. *EPA,* 571 F.3d 20 (D.C. Cir. 2009).

[10] *See,* ''Area Designations for the 2010 Revised Primary Sulfur Dioxide National Ambient Air Quality Standards,'' memorandum to Regional Air

two additional designations guidance documents on March 20, 2015, and July 22, 2016, specific to Round 2 and Round 3 processes and schedules, respectively.[11]

An updated designations guidance document was issued by the EPA on September 5, 2019, to better reflect the Round 4 2010 SO_2 NAAQS designations process and to supplement, where necessary, prior designations guidance documents.[12] This memorandum identifies factors that the EPA intended to evaluate in determining whether areas are in violation of the 2010 SO_2 NAAQS. The document also contains the factors that the EPA intended to evaluate in determining the boundaries for all remaining undesignated areas in the country. These factors include: (1) Air quality characterization via ambient monitoring and/or dispersion modeling results; (2) emissions-related data; (3) meteorology; (4) geography and topography; and (5) jurisdictional boundaries.[13]

VI. What air quality information has the EPA used for these designations?

These designations are based on the EPA's application of the nationwide analytical approach to, and technical assessment of, the weight of evidence for each area, including but not limited to available air quality monitoring data and related air quality modeling results. With respect to air quality monitoring data, the EPA has considered data from at least the most recent three full calendar years, *i.e.,* 2017–2019. The 1-hour primary SO_2 standard is violated at an ambient air quality monitoring site when the 3-year average of the annual 99th percentile of the daily maximum 1-hour average concentrations of SO_2 exceeds 75 ppb, as determined in accordance with Appendix T of 40 CFR part 50.

In the EPA's September 2019 memorandum, we noted that Round 4 area designations are based primarily on ambient monitoring data, including data from existing and new EPA-approved monitors that have collected data at least from January 2017 forward, pursuant to the DRR. In addition, the EPA may evaluate related air dispersion modeling submitted by state air agencies for two specific circumstances. First, states may submit air dispersion modeling of actual or allowable emissions to support the geographic extent of a nonattainment boundary. Second, states may submit air dispersion modeling of allowable emissions to demonstrate that new permanent and federally-enforceable SO_2 emissions limits that subject sources are meeting provide for attainment of the NAAQS and represent a more accurate characterization of current air quality at the time of designation than does monitoring data reflecting past air quality that does not account for compliance with new limits and associated enforceable emissions reductions.

The deadline for Round 4 designations and the practical difficulties of obtaining complete, quality-assured, certified SO_2 monitoring data for the entirety of calendar year 2020 in December 2020, make the EPA's use of final 2020 monitoring data for this action generally impracticable. Under normal circumstances, under the applicable regulations, the deadline for states to certify monitoring data for calendar year 2020 is May 1, 2021. However, because these designations are being promulgated at the end of calendar year 2020, and because states can make complete, quality-assured, certified 2020 data available for some areas quickly in 2021, to address the impracticability problem, the EPA is providing a process by which state-certified 2020 monitoring data that become available early in 2021 could be used in the Round 4 designations process.

Provided that this document is published in the **Federal Register** no later than March 31, 2021, the final Round 4 SO_2 designations announced in this action will be effective on April 30, 2021. If any state submits complete, quality-assured, certified 2020 data (*i.e.,* monitoring data from EPA's Air Quality System) to the appropriate EPA Regional office by February 15, 2021, supporting a change of the designation status for any Round 4 area within that state, and the EPA agrees that a change of designation status is appropriate, we will withdraw the designation announced in this action for such area and issue another designation that reflects the inclusion and analysis of such information. Any designation modification will occur in a separate **Federal Register** action prior to the April 30, 2021, effective date. We emphasize that EPA will conduct this process only for those states that submit the necessary information by the deadline of February 15, 2021, and in those instances where we can complete our analysis of the information and effect the change of designation status before the original effective date established by this final action.

VII. How do the Round 4 designations affect areas of Indian country?

There are no violating monitors for areas of Indian country, so no areas of Indian country are being designated as nonattainment or unclassifiable in Round 4. Any other parts of Indian country being designated as attainment/unclassifiable are being designated along with the surrounding state area.

VIII. Where can I find information forming the basis for this rule and exchanges between the EPA, states, and tribes related to this rule?

Information and data providing the basis for this action are provided in a final designations technical support document (TSD)[14] included in the docket. The final designations TSD, intended designations TSD, modeling files, technical assistance documents, applicable EPA memoranda, public comments, and copies of correspondence regarding this process between the EPA and the states, territories, tribes, and other parties, are available for review at the public docket for these SO_2 designations at *https://www.regulations.gov* under Docket ID No. EPA–HQ–OAR–2020–0037.

The EPA has also established a website for the initial SO_2 designations

Division Directors, Regions I–X, from Stephen D. Page, dated March 24, 2011, available at *https://www3.epa.gov/ttn/naaqs/aqmguide/collection/cp2/20110324_page_so2_designations_guidance.pdf.*

[11] *See* ''Updated Guidance for Area Designations for the 2010 Primary Sulfur Dioxide National Ambient Air Quality Standard,'' memorandum to Regional Air Division Directors, Regions 1–10, from Stephen D. Page, dated March 20, 2015, available at *https://www.epa.gov/sites/production/files/2016-04/documents/20150320so2designations.pdf,* and ''Area Designations for the 2010 Primary Sulfur Dioxide National Ambient Air Quality Standard—Round 3,'' memorandum to Regional Air Division Directors, Regions 1–10, dated July 22, 2016, available at *https://www.epa.gov/sites/production/files/2016-07/documents/areadesign.pdf.*

[12] *See* ''Area Designations for the 2010 Primary Sulfur Dioxide National Ambient Air Quality Standard—Round 4,'' memorandum to Regional Air Division Directors, Regions 1–10, from Peter Tsirigotis, dated September 5, 2019, available at *https://www.epa.gov/sites/production/files/2019-09/documents/round_4_so2_designations_memo_09-05-2019_final.pdf* .

[13] The EPA supplemented this guidance with documents first made available to states and other interested parties in 2013 and updated in 2016. *See* SO_2 NAAQS Designations Source-Oriented Monitoring Technical Assistance Document (February 2016), available at *https://www.epa.gov/sites/production/files/2016-06/documents/so2monitoringtad.pdf,* and SO_2 NAAQS Designations Modeling Technical Assistance Document (August 2016), available at *https://www.epa.gov/sites/production/files/2016-06/documents/so2modelingtad.pdf.*

[14] The single final TSD for this action consists of a few sections with information that applies to all affected areas or to certain groups of areas with some common features, and many sections that are specific to individual state areas. For convenience, the term ''TSD'' is also used generically to refer to these state-specific sections. For informational purposes, these individual state-specific sections/TSDs are available for separate downloading from the indicated EPA website.

rulemakings at: *https://www.epa.gov/sulfur-dioxide-designations.* The website includes the EPA's final SO_2 designations, as well as state recommendation letters, the EPA's 120-day intended designations notification letters, technical support documents, responses to comments, and other related technical information. Air dispersion modeling input and output files are too large to post in the docket or on the website and must be requested from the EPA Docket Office or the Regional office contacts listed in the **FOR FURTHER INFORMATION CONTACT** section of this action.

IX. Environmental Justice Concerns

When the EPA establishes a new or revised NAAQS, the CAA requires the EPA to designate all areas of the U.S. as either nonattainment, attainment, or unclassifiable. This action addresses designation determinations for certain areas for the 2010 SO_2 NAAQS. Area designations address environmental justice concerns by ensuring that the public is properly informed about the air quality in an area. In locations where air quality does not meet the NAAQS, the CAA requires relevant state authorities to initiate appropriate air quality management actions to ensure that all those residing, working, attending school, or otherwise present in those areas are protected, regardless of minority and economic status.

X. Statutory and Executive Order Reviews

A. Executive Order 12866: Regulatory Planning and Review and Executive Order 13563: Improving Regulation and Regulatory Review

This action is exempt from review by the Office of Management and Budget because it responds to the CAA requirement to promulgate air quality designations after promulgation of a new or revised NAAQS.

B. Executive Order 13771: Reducing Regulations and Controlling Regulatory Costs

This action is not an Executive Order 13771 regulatory action because air quality designations after promulgating a new revised NAAQS are exempt under Executive Order 12866.

C. Paperwork Reduction Act (PRA)

This action does not impose an information collection burden under the PRA. This action fulfills the non-discretionary duty for the EPA to promulgate air quality designations after promulgation of a new or revised NAAQS and does not contain any information collection activities.

D. Regulatory Flexibility Act (RFA)

This designation action under CAA section 107(d) is not subject to the RFA. The RFA applies only to rules subject to notice-and-comment rulemaking requirements under the Administrative Procedures Act (APA), 5 U.S.C. 553, or any other statute. Section 107(d)(2)(B) of the CAA explicitly provides that designations are exempt from the notice-and-comment provisions of the APA. In addition, designations under CAA section 107(d) are not among the list of actions that are subject to the notice-and-comment rulemaking requirements of CAA section 307(d).

E. Unfunded Mandates Reform Act (UMRA)

This action does not contain any unfunded mandate as described in UMRA, 2 U.S.C. 1531–1538 and does not significantly or uniquely affect small governments. The action imposes no enforceable duty on any state, local, or tribal governments or the private sector.

F. Executive Order 13132: Federalism

This action does not have federalism implications. It will not have substantial direct effects on the states, on the relationship between the national government and the states, or on the distribution of power and responsibilities among the various levels of government. The division of responsibility between the federal government and the states for purposes of implementing the NAAQS is established under the CAA.

G. Executive Order 13175: Consultation and Coordination With Indian Tribal Government

This action does not have tribal implications, as specified in Executive Order 13175. This action concerns the designation of certain areas in the U.S. for the 2010 SO_2 NAAQS. The CAA provides for states, territories, and eligible tribes to develop plans to regulate emissions of air pollutants within their areas, as necessary, based on the designations. The Tribal Authority Rule (TAR) provides tribes the opportunity to apply for eligibility to develop and implement CAA programs, such as programs to attain and maintain the SO_2 NAAQS, but it leaves to the discretion of the tribe the decision of whether to apply to develop these programs and which programs, or appropriate elements of a program, the tribe will seek to adopt. This rule does not have a substantial direct effect on one or more Indian tribes. It would not create any additional requirements beyond those of the SO_2 NAAQS. This rule establishes the designations for certain areas of the country for the 2010 SO_2 NAAQS, but no areas of Indian country are being designated as nonattainment by this action. Furthermore, this rule does not affect the relationship or distribution of power and responsibilities between the federal government and Indian tribes. The CAA and the TAR establish the relationship of the federal government and tribes in developing plans to attain the NAAQS, and this rule does nothing to modify that relationship. Thus, Executive Order 13175 does not apply.

Although Executive Order 13175 does not apply to this rule, after the EPA promulgated the 2010 primary SO_2 NAAQS, the EPA communicated with tribal leaders and environmental staff regarding the designations process. In 2011, the EPA also sent individualized letters to all federally recognized tribes to explain the designation process for the 2010 SO_2 NAAQS, to provide the EPA designations guidance, and to offer consultation with the EPA. The EPA provided further information to tribes through presentations at the National Tribal Forum and through participation in National Tribal Air Association conference calls. The EPA also sent individualized letters to all federally recognized tribes that submitted recommendations to the EPA about the EPA's intended Round 1 designations for the SO_2 standard and offered tribal leaders the opportunity for consultation.[15] These communications provided opportunities for tribes to voice concerns to the EPA about the general designations process for the 2010 SO_2 NAAQS, as well as concerns specific to a tribe, and informed the EPA about key tribal concerns regarding designations as the designations process was under development and through its implementation up to that point. For the second, third, and fourth rounds of SO_2 designations, the EPA sent additional letters to tribes that could potentially be affected and offered additional opportunities for participation in the designations process.

H. Executive Order 13045: Protection of Children From Environmental Health and Safety Risks

The EPA interprets Executive Order 13045 as applying to those regulatory actions that concern environmental health or safety risks that the EPA has reason to believe may disproportionately affect children, per the definition of ''covered regulatory

[15] These communication letters to the tribes are provided in the dockets for Round 1 (Docket ID NO. EPA–HQ–OAR–2012–0233), Round 2 (Docket ID NO. EPA–HQ–OAR–2014–0464), and Round 3 (Docket ID NO. EPA–HQ–OAR–2017–0003).

action'' in section 2–202 of the Executive Order. This action is not subject to Executive Order 13045 because it does not establish an environmental standard intended to mitigate health or safety risks.

I. Executive Order 13211: Actions That Significantly Affect Energy Supply, Distribution or Use

This action is not subject to Executive Order 13211 because it is not a significant regulatory action under Executive Order 12866.

J. National Technology Transfer and Advancement Act (NTTAA)

This rulemaking does not involve technical standards.

K. Executive Order 12898: Federal Actions To Address Environmental Justice in Minority Populations and Low-Income Populations

This action does not have disproportionately high and adverse human health or environmental effects on minority populations, low-income populations and/or indigenous peoples, as specified in Executive Order 12898 (59 FR 7629, February 16, 1994). The documentation for this determination is contained in Section IX of this action, ''Environmental Justice Concerns.''

L. Congressional Review Act (CRA)

This action is subject to the CRA, and the EPA will submit a rule report to each House of the Congress and to the Comptroller General of the U.S. This action is not a ''major rule'' as defined by 5 U.S.C. 804(2).

M. Judicial Review

Section 307(b)(1) of the CAA indicates which Federal Courts of Appeal have venue for petitions of review of final actions by the EPA. This section provides, in part, that petitions for review must be filed in the Court of Appeals for the District of Columbia Circuit: (i) When the agency action consists of ''nationally applicable regulations promulgated, or final actions taken, by the Administrator,'' or (ii) when such action is locally or regionally applicable, if ''such action is based on a determination of nationwide scope or effect and if in taking such action the Administrator finds and publishes that such action is based on such a determination.''

This final action is nationally applicable. To the extent a court finds this final action to be locally or regionally applicable, the EPA finds that this action is based on a determination of ''nationwide scope or effect'' within the meaning of CAA section 307(b)(1). This final action establishes designations for the 2010 SO_2 NAAQS for certain areas across the U.S., located in 21 states, nine EPA Regions, and 10 federal judicial circuits. This final action is also based on a common core of determinations applied to areas across the country, including the EPA's nationwide analytical approach to and technical analysis of evaluating monitoring data and air quality modeling within the EPA's interpretation of statutory terms in the CAA such as the definitions of nonattainment, attainment, and unclassifiable under section 107(d)(1) of the CAA. For these reasons, this final action is nationally applicable or, alternatively, to the extent a court finds this action to be locally or regionally applicable, the Administrator has determined that this final action is based on a determination of nationwide scope or effect for purposes of CAA section 307(b)(1) and is hereby publishing that finding in the **Federal Register**.

Under section 307(b)(1) of the CAA, petitions for judicial review of this action must be filed in the United States Court of Appeals for the District of Columbia Circuit within 60 days from the date this final action is published in the **Federal Register**. Filing a petition for reconsideration by the Administrator of this final action does not affect the finality of the action for the purposes of judicial review, nor does it extend the time within which a petition for judicial review must be filed, and shall not postpone the effectiveness of such rule or action.

List of Subjects in 40 CFR Part 81

Environmental protection, Air pollution control, National parks, Wilderness areas.

Signing Statement

This document of the Environmental Protection Agency was signed on December 21, 2020, by Andrew Wheeler, Administrator, pursuant to court order of December 31, 2020. That document with the original signature and date is maintained by EPA. For administrative purposes only, and in compliance with requirements of the Office of the Federal Register, the undersigned EPA Official re-signs the document for publication, as an official document of the Environmental Protection Agency. This administrative process in no way alters the legal effect of this document upon publication in the **Federal Register.**

Signed in Washington, DC, on December 21, 2020, by Andrew Wheeler, Administrator.

Jane Nishida,

Acting Administrator.

Note: This document was received for publication by the Office of the Federal Register on March 11, 2021.

For the reasons set forth in the preamble, 40 CFR part 81 is amended as follows:

PART 81—DESIGNATIONS OF AREAS FOR AIR QUALITY PLANNING PURPOSES

■ 1. The authority citation for part 81 continues to read as follows:

Authority: 42 U.S.C. 7401, et. seq.

Subpart C—Section 107 Attainment Status Designations

■ 2. In § 81.301, the table entitled ''Alabama—2010 Sulfur Dioxide NAAQS [Primary]'' is amended by removing footnote 3 from the entry ''Shelby County (part)'', adding an entry for ''Shelby County (remainder)'' in alphabetical order under ''Rest of State'', and removing footnote 3 from the end of the table.

The addition reads as follows:

§ 81.301 Alabama.

* * * * *

ALABAMA—2010 SULFUR DIOXIDE NAAQS

[Primary]

Designated area [1]	Designation	
	Date [2]	Type
* * * * * * *		
Rest of State:		

ALABAMA—2010 SULFUR DIOXIDE NAAQS—Continued

[Primary]

Designated area [1]	Designation	
	Date [2]	Type
* * * * *	*	*
Shelby County (remainder)	4/30/2021	Attainment/Unclassifiable.
* * * * *	*	*

[1] Includes any Indian country in each county or area, unless otherwise specified. EPA is not determining the boundaries of any area of Indian country in this table, including any area of Indian country located in the larger designation area. The inclusion of any Indian country in the designation area is not a determination that the state has regulatory authority under the Clean Air Act for such Indian country.
[2] This date is April 9, 2018, unless otherwise noted.

* * * * *

■ 3. In § 81.311, the table entitled ''Georgia—2010 Sulfur Dioxide NAAQS [Primary]'' is amended by removing footnote 3 from the ''Designated area'' column heading and the entry ''Rest of State'', adding an entry for ''Floyd County'' in alphabetical order under ''Rest of State:'', and removing footnote 3 from the end of the table.

The addition reads as follows:

§ 81.311 Georgia.

* * * * *

GEORGIA—2010 SULFUR DIOXIDE NAAQS

[Primary]

Designated area [1]	Designation	
	Date [2]	Type
* * * * *	*	*
Rest of State:		
* * * * *	*	*
Floyd County	4/30/2021	Attainment/Unclassifiable.
* * * * *	*	*

[1] Includes any Indian country in each county or area, unless otherwise specified. EPA is not determining the boundaries of any area of Indian country in this table, including any area of Indian country located in the larger designation area. The inclusion of any Indian country in the designation area is not a determination that the state has regulatory authority under the Clean Air Act for such Indian country.
[2] This date is April 9, 2018, unless otherwise noted.

* * * * *

■ 4. In § 81.312, the table entitled ''Hawaii—2010 Sulfur Dioxide NAAQS [Primary]'' is amended by removing footnote 3 from the ''Designated area'' column heading, adding an entry for ''Honolulu County'' in alphabetical order, and removing footnote 3 from the end of the table.

The addition reads as follows:

§ 81.312 Hawaii.

* * * * *

HAWAII—2010 SULFUR DIOXIDE NAAQS

[Primary]

Designated area [1]	Designation	
	Date [2]	Type
* * * * *	*	*
Honolulu County	4/30/2021	Attainment/Unclassifiable.
* * * * *	*	*

[1] Includes any Indian country in each county or area, unless otherwise specified. EPA is not determining the boundaries of any area of Indian country in this table, including any area of Indian country located in the larger designation area. The inclusion of any Indian country in the designation area is not a determination that the state has regulatory authority under the Clean Air Act for such Indian country.
[2] This date is April 9, 2018, unless otherwise noted.

* * * * *

■ 5. Section 81.314 is amended by revising the table entitled ''Illinois—2010 Sulfur Dioxide NAAQS [Primary]'' to read as follows:

§ 81.314 Illinois.

* * * * *

ILLINOIS—2010 SULFUR DIOXIDE NAAQS

[Primary]

Designated area [1]	Designation	
	Date [2]	Type
Alton Township, IL	9/12/2016	Nonattainment.
Madison County (part).		
Within Alton Township: Area east of Corporal Belchik Memorial Expressway, south of East Broadway, south of Route 3, and north of Route 143.		
Lemont, IL	5/26/2020	Attainment.
Cook County (part).		
Lemont Township.		
Will County (part).		
DuPage Township and Lockport Township.		
Pekin, IL	5/26/2020	Attainment.
Tazewell County (part).		
Cincinnati Township and Pekin Township.		
Peoria County (part).		
Hollis Township.		
Rest of State:		
Adams County		Attainment/Unclassifiable.
Alexander County		Attainment/Unclassifiable.
Bond County		Attainment/Unclassifiable.
Boone County		Attainment/Unclassifiable.
Brown County		Attainment/Unclassifiable.
Bureau County	9/12/2016	Attainment/Unclassifiable.
Calhoun County		Attainment/Unclassifiable.
Carroll County		Attainment/Unclassifiable.
Cass County		Attainment/Unclassifiable.
Champaign County		Attainment/Unclassifiable.
Christian County		Attainment/Unclassifiable.
Clark County		Attainment/Unclassifiable.
Clay County		Attainment/Unclassifiable.
Clinton County		Attainment/Unclassifiable.
Coles County		Attainment/Unclassifiable.
Cook County (part) (remainder)		Attainment/Unclassifiable.
Crawford County		Attainment/Unclassifiable.
Cumberland County		Attainment/Unclassifiable.
De Kalb County		Attainment/Unclassifiable.
De Witt County		Attainment/Unclassifiable.
Douglas County		Attainment/Unclassifiable.
Du Page County		Attainment/Unclassifiable.
Edgar County		Attainment/Unclassifiable.
Edwards County		Attainment/Unclassifiable.
Effingham County		Attainment/Unclassifiable.
Fayette County		Attainment/Unclassifiable.
Ford County		Attainment/Unclassifiable.
Franklin County		Attainment/Unclassifiable.
Fulton County		Attainment/Unclassifiable.
Gallatin County		Attainment/Unclassifiable.
Greene County		Attainment/Unclassifiable.
Grundy County		Attainment/Unclassifiable.
Hamilton County		Attainment/Unclassifiable.
Hancock County		Attainment/Unclassifiable.
Hardin County		Attainment/Unclassifiable.
Henderson County		Attainment/Unclassifiable.
Henry County		Attainment/Unclassifiable.
Iroquois County		Attainment/Unclassifiable.
Jackson County		Attainment/Unclassifiable.
Jasper County	9/12/2016	Attainment/Unclassifiable.
Jefferson County		Attainment/Unclassifiable.
Jersey County		Attainment/Unclassifiable.
Jo Daviess County		Attainment/Unclassifiable.
Johnson County		Attainment/Unclassifiable.
Kane County		Attainment/Unclassifiable.
Kankakee County		Attainment/Unclassifiable.
Kendall County		Attainment/Unclassifiable.
Knox County		Attainment/Unclassifiable.
Lake County		Attainment/Unclassifiable.
La Salle County		Attainment/Unclassifiable.
Lawrence County		Attainment/Unclassifiable.
Lee County		Attainment/Unclassifiable.
Livingston County		Attainment/Unclassifiable.
Logan County		Attainment/Unclassifiable.

ILLINOIS—2010 SULFUR DIOXIDE NAAQS—Continued

[Primary]

Designated area [1]	Designation	
	Date [2]	Type
McDonough County		Attainment/Unclassifiable.
McHenry County		Attainment/Unclassifiable.
McLean County		Attainment/Unclassifiable.
Macon County	4/30/2021	Attainment/Unclassifiable.
Macoupin County		Attainment/Unclassifiable.
Madison County (part) (remainder) [4]		Attainment/Unclassifiable.
Marion County		Attainment/Unclassifiable.
Marshall County		Attainment/Unclassifiable.
Mason County		Attainment/Unclassifiable.
Massac County	9/12/2016	Attainment/Unclassifiable.
Menard County		Attainment/Unclassifiable.
Mercer County		Attainment/Unclassifiable.
Monroe County		Attainment/Unclassifiable.
Montgomery County		Attainment/Unclassifiable.
Morgan County		Attainment/Unclassifiable.
Moultrie County		Attainment/Unclassifiable.
Ogle County		Attainment/Unclassifiable.
Peoria County (part) (remainder)		Attainment/Unclassifiable.
Perry County		Attainment/Unclassifiable.
Piatt County		Attainment/Unclassifiable.
Pike County		Attainment/Unclassifiable.
Pope County		Attainment/Unclassifiable.
Pulaski County		Attainment/Unclassifiable.
Putnam County	9/12/2016	Attainment/Unclassifiable.
Randolph County		Attainment/Unclassifiable.
Richland County		Attainment/Unclassifiable.
Rock Island County		Attainment/Unclassifiable.
St. Clair County		Attainment/Unclassifiable.
Saline County		Attainment/Unclassifiable.
Sangamon County		Attainment/Unclassifiable.
Schuyler County		Attainment/Unclassifiable.
Scott County		Attainment/Unclassifiable.
Shelby County		Attainment/Unclassifiable.
Stark County		Attainment/Unclassifiable.
Stephenson County		Attainment/Unclassifiable.
Tazewell County (part) (remainder)		Attainment/Unclassifiable.
Union County		Attainment/Unclassifiable.
Vermilion County		Attainment/Unclassifiable.
Wabash County		Attainment/Unclassifiable.
Warren County		Attainment/Unclassifiable.
Washington County		Attainment/Unclassifiable.
Wayne County		Attainment/Unclassifiable.
White County		Attainment/Unclassifiable.
Whiteside County		Attainment/Unclassifiable.
Will County (part) (remainder)		Attainment/Unclassifiable.
Williamson County	[3] 10/15/2019	Attainment/Unclassifiable.
Winnebago County		Attainment/Unclassifiable.
Woodford County		Attainment/Unclassifiable.

[1] Includes any Indian country in each county or area, unless otherwise specified. EPA is not determining the boundaries of any area of Indian country in this table, including any area of Indian country located in the larger designation area. The inclusion of any Indian country in the designation area is not a determination that the state has regulatory authority under the Clean Air Act for such Indian country.

[2] This date is April 9, 2018, unless otherwise noted.

[3] Williamson County was initially designated on September 12, 2016. The initial designation was reconsidered and modified on October 15, 2019.

[4] A portion of Madison County, specifically all of Wood River Township, and the area in Chouteau Township north of Cahokia Diversion Channel, was designated attainment/unclassifiable on 9/12/16.

* * * * *

■ 6. In § 81.315, the table entitled ''Indiana—2010 Sulfur Dioxide NAAQS [Primary]'' is amended by removing footnote 3 from the ''Designated area'' column heading, adding an entry for ''Porter County'' (before the entry for ''Posey County''), and removing footnote 3 from the end of the table.

The addition reads as follows:

§ 81.315 Indiana.

* * * * *

INDIANA—2010 SULFUR DIOXIDE NAAQS

[Primary]

Designated area [1]	Designation	
	Date [2]	Type
* * * * *	*	*
Porter County	4/30/2021	Attainment/Unclassifiable.
* * * * *	*	*

[1] Includes any Indian country in each county or area, unless otherwise specified. EPA is not determining the boundaries of any area of Indian country in this table, including any area of Indian country located in the larger designation area. The inclusion of any Indian country in the designation area is not a determination that the state has regulatory authority under the Clean Air Act for such Indian country.

[2] This date is April 9, 2018, unless otherwise noted.

* * * * *

■ 7. In § 81.318, table entitled ''Kentucky—2010 Sulfur Dioxide NAAQS [Primary]'' is amended by removing footnote 4 from the ''Designated area'' heading and from the entry for ''Henderson County (part)'', adding entries for ''Henderson-Webster Counties, KY'' (before the entry ''Campbell-Clermont Counties, KY-OH:'') adding entries for ''Henderson County (remainder)'' (before the entry ''Henry County''), and ''Webster County (remainder)'' in alphabetical order, and removing footnote 4 from the end of the table.

The additions read as follows:

§ 81.318 Kentucky.

* * * * *

KENTUCKY—2010 SULFUR DIOXIDE NAAQS

[Primary]

Designated area	Designation	
	Date [1]	Type
Henderson-Webster Counties, KY	4/30/2021	Nonattainment.
Henderson County (part).		
Webster County (part).		
That portion of Henderson and Webster Counties encompassed by the polygon with the 48 vertices using Universal Traverse Mercator (UTM) coordinates of North American Datum 1983 (NAD83) as follows:		
(1) KY 520, Upper Delaware Rd to the Green River boundary at 463979.00 Easting (E), 4171000.03 Northing (N);		
(2) The Green River boundary to JZ Shelton Rd 459058.03 E, 4160832.96 N;		
(3) JZ Shelton Rd to KY 370 457811.00 E, 4159192.96, N;		
(4) KY 370 to Pennyrile Parkway I–69 457089.96 E, 4159452.95 N;		
(5) Pennyrile Parkway I–69 to Sassafras Grove Rd 457675.35 E, 4156244.55 N;		
(6) Sassafras Grove Rd to US 41 456236.68 E, 4156125.75 N;		
(7) US 41 to Slaughters Elmwood Rd 457442.82 E, 4153425.68 N;		
(8) Slaughters Elmwood Rd to Railroad Track (NW) 456589.41 E, 4153424.43 N;		
(9) Railroad Track (NW) to Breton Rd 453677.09 E, 4155992.29 N;		
(10) Breton Rd to KY 1835 453079.74 E, 4154924.00 N;		
(11) KY 1835 to KY 138 450702.89 E, 4153141.51 N;		
(12) KY 138 to Crowder Rd 452587.06 E, 4152032.38 N;		
(13) Crowder Rd to KY 120 453030.14 E, 4149175.08 N;		
(14) KY 120 to Gooch Jones Rd 447528.25 E, 4147663.88 N;		
(15) Gooch Jones Rd to John Roach Rd 446551.75 E, 4150042.51 N;		
(16) John Roach Rd to Old Dixon Slaughters Rd 447462.17 E, 4151329.04 N;		
(17) Old Dixon Slaughters Rd to Old Dixon Rd 446532.28 E, 4152143.23 N;		
(18) Old Dixon Rd to KY 138 446849.49 E, 4152437.09 N;		
(19) KY 138 to Carnel Brooks Rd 450196.38 E, 4153305.18 N;		
(20) Carnel Brooks Rd to Rakestraw Bottoms Rd 450079.34 E, 4154326.39 N;		
(21) Rakestraw Bottoms Rd to KY 132 447141.40 E, 4157145.04 N;		
(22) KY 132 to KY 283 444025.55 E, 4156172.90 N;		
(23) KY 283 to Beckley Osbourne Rd 444300.82 E, 4158111.35 N;		
(24) Beckley Osbourne Rd to Dixon Wanamaker Rd 442067.07 E, 4158641.90 N;		
(25) Dixon Wanamaker Rd to KY 191 441887.88 E, 4161614.33 N;		
(26) KY 191 to D Melton Rd 442743.25 E, 4161250.11 N;		
(27) D Melton Rd to Knoblick Creek Rd 443688.82 E, 4162093.08 N;		
(28) Knoblick Creek Rd to US 41A 442319.35 E, 4163220.45 N;		
(29) US 41A to Dixon 1 Rd 443500.62 E, 4170518.52 N;		
(30) Dixon 1 Rd to GF Sights Rd 443094.58 E, 4170166.59 N;		
(31) GF Sights Rd to Cairo Dixie Rd 441341.46 E, 4170978.60 N;		
(32) Cairo Dixie Rd to Liles Cairo Rd 442919.00 E, 4173140.24 N;		
(33) Liles Cairo Rd to US 41A 443124.23 E, 4173204.51 N;		
(34) US 41A to Cairo Hickory Grove Rd 442860.28 E, 4174017.18 N;		
(35) Cairo Hickory Grove Rd to Pruitt Agnew Rd 446056.06 E, 4175740.98 N;		

KENTUCKY—2010 SULFUR DIOXIDE NAAQS—Continued

[Primary]

Designated area	Designation	
	Date [1]	Type
(36) Pruitt Agnew Rd to KY 1299 447662.11 E, 4180049.93 N; (37) KY 1299 to Anthoston Frog Island Rd 448905.37 E, 4176327.31 N; (38) Anthoston Frog Island Rd to KY 136 452613.63 E, 4179047.02 N; (39) KY 136 to Upper Delaware Rd 454451.59 E, 4177687.26 N; (40) Upper Delaware Rd to Barren Church Rd S 456153.23 E, 4177723.20 N; (41) Barren Church Rd S to Barren Church Rd N 457912.85 E, 4180247.83 N; (42) Barren Church Rd N to KY 1078 458542.52 E, 4181615.55 N; (43) KY 1078 to Jones Brothers Rd 461322.00 E, 4179952.85 N; (44) Jones Brothers Rd to KY 416 461209.84 E, 4177755.55 N; (45) KY 416 to KY 1078 463492.08 E, 4178026.50 N; (46) KY 1078 to Onionville Rd 464177.31 E, 4177054.13 N; (47) Onionville Rd to Work Road 465476.34 E, 4176076.78 N; (48) Work Road to Upper Delaware Rd 462529.15 E, 4173036.52 N.		
* * * * *	*	*
Henderson County (remainder)	4/30/2021	Attainment/Unclassifiable.
* * * * *	*	*
Webster County (remainder)	4/30/2021	Attainment/Unclassifiable.
* * * * *	*	*

[1] This date is April 9, 2018, unless otherwise noted.
[2] Excludes Indian country located in each area, if any, unless otherwise specified
[3] Includes any Indian country in each county or area, if any, unless otherwise specified. EPA is not determining the boundaries of any area of Indian country in this table, including any area of Indian country located in the larger designation area. The inclusion of any Indian country in the designation area is not a determination that the state has regulatory authority under the Clean Air Act for such Indian country.

* * * * *

■ 8. In § 81.319, the table entitled ''Louisiana—2010 Sulfur Dioxide NAAQS [Primary]'' is amended by removing footnote 3 from the ''Designated area'' column heading, adding entries for ''East Baton Rouge Parish'' (before the entry for ''East Carroll Parish), ''St. Charles Parish'' (before the entry for ''St. Helena Parish), ''St. James Parish'' (before the entry for ''St. John the Baptist Parish''), and ''West Baton Rouge Parish'' (before the entry for ''West Carroll Parish''), and removing footnote 3 from the end of the table.

The additions read as follows:

§ 81.319 Louisiana.

* * * * *

LOUISIANA—2010 SULFUR DIOXIDE NAAQS

[Primary]

Designated area [1]	Designation	
	Date [2]	Type
* * * * *	*	*
East Baton Rouge Parish	4/30/2021	Attainment/Unclassifiable.
* * * * *	*	*
St. Charles Parish	4/30/2021	Attainment/Unclassifiable.
* * * * *	*	*
St. James Parish	4/30/2021	Attainment/Unclassifiable.
* * * * *	*	*
West Baton Rouge Parish	4/30/2021	Attainment/Unclassifiable.
* * * * *	*	*

[1] Includes any Indian country in each county or area, unless otherwise specified. EPA is not determining the boundaries of any area of Indian country in this table, including any area of Indian country located in the larger designation area. The inclusion of any Indian country in the designation area is not a determination that the state has regulatory authority under the Clean Air Act for such Indian country.
[2] This date is April 9, 2018, unless otherwise noted.

* * * * *

■ 9. In § 81.321, the table entitled ''Maryland—2010 Sulfur Dioxide NAAQS [Primary]'' is amended by removing footnote 3 from the ''Designated area'' column heading, adding an entry for ''Allegany County'' before the entry ''Anne Arundel County (part) Remainder of County'', and

removing footnote 3 from the end of the table.

The addition reads as follows:

§ 81.321 Maryland.

* * * * *

MARYLAND—2010 SULFUR DIOXIDE NAAQS

[Primary]

Designated area [1]	Designation	
	Date [2]	Type
* * * * *	*	*
Allegany County	4/30/2021	Attainment/Unclassifiable.
* * * * *	*	*

[1] Includes any Indian country in each county or area, unless otherwise specified. EPA is not determining the boundaries of any area of Indian country in this table, including any area of Indian country located in the larger designation area. The inclusion of any Indian country in the designation area is not a determination that the state has regulatory authority under the Clean Air Act for such Indian country.

[2] This date is April 9, 2018, unless otherwise noted.

* * * * *

■ 10. In § 81.326, the table entitled ''Missouri—2010 Sulfur Dioxide NAAQS [Primary]'' is amended by removing footnote 3 from the ''Designated area'' column heading, adding an entry for ''New Madrid County, MO'' (before the entry for ''Franklin-St. Charles Counties, MO''), adding an entry for ''Iron County'' (before the entry for ''Jackson County (part)(remainder)''), adding an entry for ''New Madrid County (remainder)'' (before the entry for ''Newton County''), and removing footnote 3 from the end of the table.

The addtions read as follows:

§ 81.326 Missouri.

* * * * *

MISSOURI—2010 SULFUR DIOXIDE NAAQS

[Primary]

Designated area [1]	Designation	
	Date [2]	Type
* * * * *	*	*
New Madrid County, MO New Madrid County (part). Area bounded by: East: Missouri/Kentucky and Missouri/Tennessee State lines. North: County Highway 406 East to Levee Road, following Levee Road North to County Highway 406, then extending directly East to the Missouri/Kentucky State line. West: County Highway 403 South: County Highway 408 East to the intersection with County Highway 431, then extending directly East to the Missouri/Tennessee State line.	4/30/2021	Nonattainment.
* * * * *	*	*
Iron County	4/30/2021	Attainment/Unclassifiable.
* * * * *	*	*
New Madrid County (remainder)	4/30/2021	Attainment/Unclassifiable.
* * * * *	*	*

[1] Includes any Indian country in each county or area, unless otherwise specified. EPA is not determining the boundaries of any area of Indian country in this table, including any area of Indian country located in the larger designation area. The inclusion of any Indian country in the designation area is not a determination that the state has regulatory authority under the Clean Air Act for such Indian country.

[2] This date is April 9, 2018, unless otherwise noted.

* * * * *

■ 11. In § 81.328, the table entitled ''Nebraska—2010 Sulfur Dioxide NAAQS [Primary]'' is amended by removing footnote 3 from the ''Designated area'' column heading, adding an entry for ''Douglas County'' in alphabetical order under ''Statewide:'', and removing footnote 3 from the end of the table.

The addition reads as follows:

§ 81.328 Nebraska.

* * * * *

NEBRASKA—2010 SULFUR DIOXIDE NAAQS

[Primary]

Designated area [1]	Designation	
	Date [2]	Type
* * * * *	*	*
Statewide:		
* * * * *	*	*
Douglas County	4/30/2021	Attainment/Unclassifiable.
* * * * *	*	*

[1] Includes any Indian country in each county or area, unless otherwise specified. EPA is not determining the boundaries of any area of Indian country in this table, including any area of Indian country located in the larger designation area. The inclusion of any Indian country in the designation area is not a determination that the state has regulatory authority under the Clean Air Act for such Indian country.
[2] This date is April 9, 2018, unless otherwise noted.

* * * * *

■ 12. In § 81.333, the table entitled ''New York—2010 Sulfur Dioxide NAAQS [Primary]'' is amended by removing footnote 3 from the ''Designated area'' column heading, adding entries for ''St. Lawrence County (part)'' (before the entry for ''Monroe County''), ''Cayuga County'' (before the entry for ''Chautauqua County''), ''Seneca County'' (before the entry for ''Steuben County''), ''St. Lawrence County (remainder)'' (before the entry for ''Steuben County''), and ''Tompkins County'' (before the entry for ''Ulster County''), and removing footnote 3 from the end of the table.

The additions read as follows:

§ 81.333 New York.

* * * * *

NEW YORK—2010 SULFUR DIOXIDE NAAQS

[Primary]

Designated area [1]	Designation	
	Date [2]	Type
St. Lawrence County (part)	4/30/2021	Nonattainment.
That portion of St. Lawrence County encompassed by the polygon with the vertices using Universal Traverse Mercator (UTM) coordinates in UTM zone 18 with datum NAD83 as follows: (1) Vertices-UTM Easting (m) 512656.8, UTM Northing 4977651.3; (2) vertices-UTM Easting (m) 510356.8, UTM Northing 4976189.5; (3) Vertices-UTM Easting (m) 511064.5, UTM Northing 4974489.7; (4) Vertices-UTM Easting (m) 508898.2, UTM Northing 4973487.1; (5) Vertices-UTM Easting (m) 509251.4, UTM Northing 4972866.3; (6) Vertices-UTM Easting (m) 509307.3, UTM Northing 4971758.9; (7) Vertices-UTM Easting (m) 507840.9, UTM Northing 4973890.8; (8) Vertices-UTM Easting (m) 504128.1, UTM Northing 4974535.5; (9) Vertices-UTM Easting (m) 502311.8, UTM Northing 4977342.3; (10) Vertices-UTM Easting (m) 503989.7, UTM Northing 4979232.2; (11) Vertices-UTM Easting (m) 504692.2, UTM Northing 4981230.3; (12) Vertices-UTM Easting (m) 509220.5, UTM Northing 4983035.6.		
* * * * *	*	*
Cayuga County	4/30/2021	Attainment/Unclassifiable.
* * * * *	*	*
Seneca County	4/30/2021	Attainment/Unclassifiable.
St. Lawrence County (remainder)	4/30/2021	Attainment/Unclassifiable.
* * * * *	*	*
Tompkins County	4/30/2021	Attainment/Unclassifiable.
* * * * *	*	*

[1] Includes any Indian country in each county or area, unless otherwise specified. EPA is not determining the boundaries of any area of Indian country in this table, including any area of Indian country located in the larger designation area. The inclusion of any Indian country in the designation area is not a determination that the state has regulatory authority under the Clean Air Act for such Indian country.
[2] This date is April 9, 2018, unless otherwise noted.

* * * * *

■ 13. In § 81.334, the table entitled ''North Carolina–2010 Sulfur Dioxide NAAQS [Primary]'' is amended by:

■ a. Removing the entry for ''Buncombe County (part) [4] '' and adding an entry for ''Buncombe County'' in its place;

■ b. Adding an entry for ''Limestone Township'' under the new entry for ''Buncombe County'';

■ c. Removing the entry for ''Haywood County (part) [4] '' and adding an entry for ''Haywood County'' in its place;

■ d. Adding an entry for ''Beaverdam Township'' under the new entry for ''Haywood County'';

■ e. Removing the entry for ''Person County (part) [4] '' and adding an entry for ''Person County'' in its place;

■ f. Adding an entry for ''Cunningham Township'' under the new entry for ''Person County''; and

■ g. Removing footnote 4 from the table.

The additions read as follows:

§ 81.334 North Carolina.

* * * * *

NORTH CAROLINA—2010 SULFUR DIOXIDE NAAQS

[Primary]

Designated area	Designation	
	Date [1]	Type
* * * * *	*	*
Buncombe County		Attainment/Unclassifiable.
All Townships except Limestone Township.		
Limestone Township	4/30/2021	
* * * * *	*	*
Haywood County		Attainment/Unclassifiable.
All Townships except Beaverdam Township.		
Beaverdam Township	4/30/2021	
* * * * *	*	*
Person County		Attainment/Unclassifiable.
All Townships except Cunningham Township.		
Cunningham Township	4/30/2021	
* * * * *	*	*

[1] This date is April 9, 2018, unless otherwise noted.
[2] Excludes Indian country located in each area, if any, unless otherwise specified
[3] Includes any Indian country in each county or area, unless otherwise specified. EPA is not determining the boundaries of any area of Indian country in this table, including any area of Indian country located in the larger designation area. The inclusion of any Indian country in the designation area is not a determination that the state has regulatory authority under the Clean Air Act for such Indian country.

* * * * *

■ 14. In § 81.335, the table entitled ''North Dakota–2010 Sulfur Dioxide NAAQS [Primary]'' is amended by removing footnote 3 from the entry for ''Rest of State:'', adding an entry for ''Williams County'' in alphabetical order under ''Rest of State:'', and removing footnote 3 from the end of the table.

The addition reads as follows:

§ 81.335 North Dakota.

* * * * *

NORTH DAKOTA—2010 SULFUR DIOXIDE NAAQS

[Primary]

Designated area [1]	Designation	
	Date [2]	Type
* * * * *	*	*
Rest of State:		Attainment/Unclassifiable.
* * * * *	*	*
Williams County	4/30/2021	

[1] Includes any Indian country in each county or area, unless otherwise specified. EPA is not determining the boundaries of any area of Indian country in this table, including any area of Indian country located in the larger designation area. The inclusion of any Indian country in the designation area is not a determination that the state has regulatory authority under the Clean Air Act for such Indian country.
[2] This date is April 9, 2018, unless otherwise noted.

* * * * *

■ 15. In § 81.337, the table entitled ''Oklahoma–2010 Sulfur Dioxide NAAQS [Primary]'' is amended by removing footnote 3 from the ''Designated area'' column heading, adding entries for ''Garfield County'', ''Mayes County'', and ''Muskogee County'' in alphabetical order, and removing footnote 3 from the end of the table.

The additions read as follows:

§ 81.337 Oklahoma.

* * * * *

OKLAHOMA—2010 SULFUR DIOXIDE NAAQS

[Primary]

Designated area [1]	Designation	
	Date [2]	Type
* * * * *	*	*
Garfield County	4/30/2021	Attainment/Unclassifiable.
* * * * *	*	*
Mayes County	4/30/2021	Attainment/Unclassifiable.
* * * * *	*	*
Muskogee County	4/30/2021	Attainment/Unclassifiable.
* * * * *	*	*

[1] Includes any Indian country in each county or area, unless otherwise specified. EPA is not determining the boundaries of any area of Indian country in this table, including any area of Indian country located in the larger designation area. The inclusion of any Indian country in the designation area is not a determination that the state has regulatory authority under the Clean Air Act for such Indian country.

[2] This date is April 9, 2018, unless otherwise noted.

* * * * *

■ 16. In § 81.339, the table entitled ''Pennsylvania—2010 Sulfur Dioxide NAAQS [Primary]'' is amended by removing footnote 3 from the ''Designated area'' column heading, adding an entry for ''York County'' (after the entry for ''Wyoming County''), and removing footnote 3 from the end of the table.

The addition reads as follows:

§ 81.339 Pennsylvania.

* * * * *

PENNSYLVANIA—2010 SULFUR DIOXIDE NAAQS

[Primary]

Designated area [1]	Designation	
	Date [2]	Type
* * * * *	*	*
York County	4/30/2021	Attainment/Unclassifiable.

[1] Includes any Indian country in each county or area, unless otherwise specified. EPA is not determining the boundaries of any area of Indian country in this table, including any area of Indian country located in the larger designation area. The inclusion of any Indian country in the designation area is not a determination that the state has regulatory authority under the Clean Air Act for such Indian country.

[2] This date is April 9, 2018, unless otherwise noted.

* * * * *

■ 17. In § 81.344, the table entitled ''Texas–2010 Sulfur Dioxide NAAQS [Primary]'' is amended by:

■ a. Removing footnote 3 from the ''Designated area'' column heading;

■ b. Adding entries for ''Howard County (part)'', ''Hutchinson County (part)'', and ''Navarro County (part)'' in alphabetical order before the entry for ''Rusk and Panola Counties, TX'';

■ c. Adding an entry for ''Harrison County'' before the entry for ''Milam County'';

■ d. Adding an entry for ''Orange County'' before the entry for ''Potter County'';

■ e. Adding an entry for ''Bexar County'' before the entry for ''Blanco County'';

■ f. Adding an entry for ''Howard County (remainder)'' before the entry for ''Hudspeth County'';

■ g. Adding an entry for ''Hutchinson (remainder)'' before the entry for ''Irion County'';

■ h. Adding an entry for ''Jefferson County'' before the entry for ''Jim Hogg County'';

■ i. Adding an entry for ''Navarro County (remainder)'' before the entry for ''Newton County'';

■ j. Revising the entry for ''Robertson County'' to read ''Robertson County (partial) [3] '';

■ k. Adding an entry for ''Robertson County (remainder) [3]'' before the entry for ''Rockwall County'';

■ l. Removing the entry for ''Titus County (part)'' and adding an entry for ''Titus County (remainder)'' in its place; and

■ m. Revising the text of footnote 3

The additions and revision read as follows:

§ 81.344 Texas.

* * * * *

TEXAS—2010 SULFUR DIOXIDE NAAQS

[Primary]

Designated area [1]	Designation	
	Date [2]	Type
* * * * *	*	*
Howard County, TX (part)	4/30/2021	Nonattainment.
Those portions of Howard County encompassed by the rectangle with the vertices using Universal Traverse Mercator (UTM) coordinates in UTM zone 14 with datum NAD83 as follows: (1) Vertices—UTM Easting (m) 271177.6, UTM Northing (m) 3571453.5; (2) vertices—UTM Easting (m) 274913.8, UTM Northing (m) 3571453.5; (3) vertices—UTM Easting (m) 274913.8, UTM Northing (m) 3576035.9; (4) vertices—UTM Easting (m) 271177.6, UTM Northing (m) 3576035.9.		
* * * * *	*	*
Hutchinson County, TX (part)	4/30/2021	Nonattainment.
Those portions of Hutchinson County encompassed by the rectangle with the vertices using Universal Traverse Mercator (UTM) coordinates in UTM zone 14 with datum NAD83 as follows: (1) Vertices—UTM Easting (m) 273540.5, UTM Northing (m) 3945147.6; (2) vertices—UTM Easting (m) 296187.4, UTM Northing (m) 3944698.5; (3) vertices—UTM Easting (m) 296187.4, UTM Northing (m) 3959485.8; (4) vertices—UTM Easting (m) 273540.5, UTM Northing (m) 3959499.4.		
* * * * *	*	*
Navarro County (part)	4/30/2021	Nonattainment.
Those portions of Navarro County encompassed by the polygon with the vertices using Universal Traverse Mercator (UTM) coordinates in UTM zone 14 with datum NAD83 as follows: (1) Vertices—UTM Easting (m) 734940.8, UTM Northing (m) 3520745.2; (2) vertices—UTM Easting (m) 737000.0, UTM Northing (m) 3520585.9; (3) vertices—UTM Easting (m) 756678.9, UTM Northing (m) 3532601.9; (4) vertices—UTM Easting (m) 756678.9, UTM Northing (m) 3542866.0; (5) vertices—UTM Easting (m) 734940.8, UTM Northing (m) 3542866.0.		
* * * * *	*	*
Harrison County	4/30/2021	Unclassifiable.
* * * * *	*	*
Orange County	4/30/2021	Unclassifiable.
* * * * *	*	*
Bexar County	4/30/2021	Attainment/Unclassifiable.
* * * * *	*	*
Howard County (remainder)	4/30/2021	Attainment/Unclassifiable.
* * * * *	*	*
Hutchinson County (remainder)	4/30/2021	Attainment/Unclassifiable.
* * * * *	*	*
Jefferson County	4/30/2021	Attainment/Unclassifiable.
* * * * *	*	*
Navarro County (remainder)	4/30/2021	Attainment/Unclassifiable.
* * * * *	*	*
Robertson County (part) [3]	9/12/2016	Attainment/Unclassifiable.
* * * * *	*	*
Robertson County (remainder) [3]	4/30/2021	Attainment/Unclassifiable.
* * * * *	*	*
Titus County (remainder)	4/30/2021	Attainment/Unclassifiable.
* * * * *	*	*

[1] Includes any Indian country in each county or area, unless otherwise specified. EPA is not determining the boundaries of any area of Indian country in this table, including any area of Indian country located in the larger designation area. The inclusion of any Indian country in the designation area is not a determination that the state has regulatory authority under the Clean Air Act for such Indian country.

[2] This date is April 9, 2018, unless otherwise noted.

[3] A portion of Robertson County, specifically the area around the Optim Energy Twin Oaks Power Station, was designated Attainment/Unclassifiable on 9/12/16. The remaining portion of Robertson County was designated on 4/30/2021.

* * * * *

■ 18. In § 81.347, the table entitled ''Virginia–2010 Sulfur Dioxide NAAQS [Primary]'' is amended by removing footnote 3 from the ''Designated area'' column heading, adding an entry for ''Giles County (part)'' (before the entry for ''Buchanan County''), adding entries for ''Alleghany County'', ''Botetourt County'', and ''Giles County (remainder)'' in alphabetical order after the entry for ''Accomack County'', and removing footnote 3 from the end of the table.

The additions read as follows:

§ 81.347 Virginia.

* * * * *

VIRGINIA—2010 SULFUR DIOXIDE NAAQS

[Primary]

Designated area [1]	Designation	
	Date [2]	Type
Giles County (part)	4/30/2021	Nonattainment.
Using Geographic Coordinate System:		
GCS_North_American_1983 and Datum D_North_American_1983, the area bounded by the lines connecting the following coordinate points (Latitude, Longitude):		
37.385249, −80.718248		
37.431656, −80.619986		
37.391368, −80.597698		
37.369986, −80.649488		
37.354441, −80.642085		
37.338479, −80.676322		
37.339474, −80.676771		
37.340652, −80.677123		
37.341580, −80.677298		
37.343330, −80.678318		
37.344937, −80.679026		
37.345866, −80.679692		
37.347105, −80.680670		
37.347976, −80.681783		
37.348229, −80.682898		
37.348480, −80.683657		
37.348185, −80.684689		
37.347824, −80.685948		
37.347241, −80.687983		
37.346509, −80.689766		
37.346075, −80.691489		
37.345317, −80.693571		
37.345091, −80.694767		
37.344900, −80.696603		
37.344679, −80.697755		
37.344700, −80.698520		
37.344989, −80.699570		
37.345395, −80.700635		
37.345740, −80.701485		
37.347021, −80.701929		
37.348308, −80.701922		
37.349556, −80.701498		
37.350789, −80.701099		
37.352718, −80.700642		
37.354894, −80.700352		
37.356601, −80.700486		
37.358442, −80.700844		
37.359567, −80.701852		
37.361185, −80.702914		
37.361950, −80.703726		
37.362516, −80.705580		
37.362901, −80.707040		
37.363285, −80.708539		
* * * * *	*	*
Alleghany County	4/30/2021	Attainment/Unclassifiable.
* * * * *	*	*
Botetourt County	4/30/2021	Attainment/Unclassifiable.
* * * * *	*	*
Giles County (remainder)	4/30/2021	Attainment/Unclassifiable.
* * * * *	*	*

[1] Includes any Indian country in each county or area, unless otherwise specified. EPA is not determining the boundaries of any area of Indian country in this table, including any area of Indian country located in the larger designation area. The inclusion of any Indian country in the designation area is not a determination that the state has regulatory authority under the Clean Air Act for such Indian country.

[2] This date is April 9, 2018, unless otherwise noted.

* * * * *

■ 19. In § 81.348, the table entitled ''Washington–2010 Sulfur Dioxide NAAQS [Primary]'' is amended by removing footnote 3 from the entry for ''Rest of State:'', adding an entry for ''Whatcom County (part)'' (before the entry ''Lewis County''), adding entries for ''Chelan'', ''Douglas'', and ''Whatcom (remainder)'' in alphabetical order under ''Rest of State:'', and removing footnote 3 from the end of the table.

The additions read as follows:

§ 81.348 Washington.

* * * * *

WASHINGTON—2010 SULFUR DIOXIDE NAAQS

[Primary]

Designated area [1]	Designation	
	Date [2]	Type
Whatcom County (part)	4/30/2021	Nonattainment.
That portion of Whatcom County encompassed by the rectangle with the vertices using Universal Traverse Mercator (UTM) coordinates in UTM zone 10 with datum NAD83 as follows: (1) Vertices—UTM Easting (m) 519671, UTM Northing (m) 5412272; (2) Vertices—UTM Easting (m) 524091, UTM Northing (m) 5412261; (3) Vertices—UTM Easting (m) 519671, UTM Northing (m) 5409010; (1) Vertices—UTM Easting (m) 524111, UTM Northing (m) 5409044.		
* * * * *	*	*
Rest of State:		
* * * * *	*	*
Chelan	4/30/2021	Attainment/Unclassifiable.
* * * * *	*	*
Douglas	4/30/2021	Attainment/Unclassifiable.
* * * * *	*	*
Whatcom (remainder)	4/30/2021	Attainment/Unclassifiable.
* * * * *	*	*

[1] Includes any Indian country in each county or area, unless otherwise specified. EPA is not determining the boundaries of any area of Indian country in this table, including any area of Indian country located in the larger designation area. The inclusion of any Indian country in the designation area is not a determination that the state has regulatory authority under the Clean Air Act for such Indian country.
[2] This date is April 9, 2018, unless otherwise noted.

* * * * *

■ 20. In § 81.349, the table entitled ''West Virginia—2010 Sulfur Dioxide NAAQS [Primary]'' is amended by removing footnote 3 from the ''Designated area'' column heading, adding an entry for ''Mineral County'' (before the entry for ''Mingo County''), and removing footnote 3 from the end of the table.

The addition reads as follows:

§ 81.349 West Virginia.

* * * * *

WEST VIRGINIA—2010 SULFUR DIOXIDE NAAQS

[Primary]

Designated area [1]	Designation	
	Date [2]	Type
* * * * *	*	*
Mineral County	4/30/2021	Attainment/Unclassifiable.
* * * * *	*	*

[1] Includes any Indian country in each county or area, unless otherwise specified. EPA is not determining the boundaries of any area of Indian country in this table, including any area of Indian country located in the larger designation area. The inclusion of any Indian country in the designation area is not a determination that the state has regulatory authority under the Clean Air Act for such Indian country.
[2] This date is April 9, 2018, unless otherwise noted.

* * * * *

■ 21. In § 81.350, the table entitled ''Wisconsin—2010 Sulfur Dioxide NAAQS [Primary]'' is amended by:

■ a. Removing footnote 4 from the ''Designated area'' column heading;

■ b. Adding an entry for ''Outagamie County (part)'' before the entry ''Rhinelander, WI'';

■ c. Removing the entry for ''Oneida County'' below the entry ''Oconto County'' and adding an entry for ''Oneida County (remainder)'' in its place;

■ d. Adding an entry for ''Outagamie County (remainder)'' before the entry ''Ozaukee County; and

■ e. Removing footnote 4 from the end of the table.

The additions read as follows:

§ 81.350 Wisconsin.

* * * * *

WISCONSIN—2010 SULFUR DIOXIDE NAAQS

[Primary]

Designated area [1]	Designation	
	Date [2]	Type
Outagamie County (part)	4/30/2021	Nonattainment.
Outagamie County except Oneida Township (which includes Oneida Reservation), Oneida Off-Reservation Trust Land, and Noncontiguous Portions of Seymour Township Adjoining Oneida Nation Tribal Lands.		
* * * * *	*	*
Oneida County (remainder)	.....	Attainment/Unclassifiable.
Outagamie County (remainder)	4/30/2021	Attainment/Unclassifiable.
* * * * *	*	*

[1] Includes any Indian country in each county or area, unless otherwise specified. EPA is not determining the boundaries of any area of Indian country in this table, including any area of Indian country located in the larger designation area. The inclusion of any Indian country in the designation area is not a determination that the state has regulatory authority under the Clean Air Act for such Indian country.

[2] This date is April 9, 2018, unless otherwise noted.

[3] Includes Indian country of the tribe listed in this table located in Forest County, Wisconsin. Information pertaining to areas of Indian country in this table is intended for Clean Air Act planning purposes only and is not an EPA determination of Indian country status or any Indian country boundary. EPA lacks the authority to establish Indian country land status, and is making no determination of Indian country boundaries, in this table.

* * * * *

■ 22. Section 81.351 is amended by revising the table entitled ''Wyoming—2010 Sulfur Dioxide NAAQS [Primary]'' to read as follows:

§ 81.351 Wyoming.

* * * * *

WYOMING—2010 SULFUR DIOXIDE NAAQS

[Primary]

Designated area [1]	Designation	
	Date [2]	Type
Albany County	.....	Attainment/Unclassifiable.
Big Horn County	.....	Attainment/Unclassifiable.
Campbell County	.....	Attainment/Unclassifiable.
Carbon County	4/30/2021	Attainment/Unclassifiable.
Converse County	4/30/2021	Attainment/Unclassifiable.
Crook County	.....	Attainment/Unclassifiable.
Fremont County (part)	.....	Attainment/Unclassifiable.
All areas west of the western border of Township 40North-Range 93West, T39N–R93W, and T38N–R93W, and south of U.S. Route 20.		
Freemont County (remainder)	4/30/2021	Attainment/Unclassifiable.
Goshen County	.....	Attainment/Unclassifiable.
Hot Springs County	.....	Attainment/Unclassifiable.
Johnson County	.....	Attainment/Unclassifiable.
Lincoln County	.....	Attainment/Unclassifiable.
Natrona County	.....	Attainment/Unclassifiable.
Niobrara County	.....	Attainment/Unclassifiable.
Park County	.....	Attainment/Unclassifiable.
Platte County	.....	Attainment/Unclassifiable.
Sheridan County	.....	Attainment/Unclassifiable.
Sublette County	.....	Attainment/Unclassifiable.
Sweetwater County (part)	.....	Attainment/Unclassifiable.
All areas of the county east of U.S. Route 191.		
Sweetwater County (remainder)	4/30/2021	Attainment/Unclassifiable.
Teton County	.....	Attainment/Unclassifiable.
Uinta County	.....	Attainment/Unclassifiable.
Washakie County	.....	Attainment/Unclassifiable.
Weston County	.....	Attainment/Unclassifiable.

[1] Includes any Indian country in each county or area, unless otherwise specified. EPA is not determining the boundaries of any area of Indian country in this table, including any area of Indian country located in the larger designation area. The inclusion of any Indian country in the designation area is not a determination that the state has regulatory authority under the Clean Air Act for such Indian country.

[2] This date is April 9, 2018, unless otherwise noted.

* * * * *

[FR Doc. 2021–05397 Filed 3–25–21; 8:45 am]

BILLING CODE 6560–50–P

ENVIRONMENTAL PROTECTION AGENCY

40 CFR Part 261

[EPA–R02–RCRA–2021–0026; FRL–10019–81–Region 2]

Hazardous Waste Management System: Identification and Listing of Hazardous Waste; Final Rule

AGENCY: Environmental Protection Agency (EPA).

ACTION: Final rule.

SUMMARY: The EPA is removing an exclusion granting Watervliet Arsenal to delist the electroplating wastewater treatment sludges (EPA Hazardous Waste No. F006) generated by the Watervliet, New York facility from the lists of hazardous wastes. This action revises the final rule published on January 10, 1986. The EPA has received information from the facility indicating the present treatment process at the facility and waste currently generated at the facility differ from those for which the Arsenal's original petition was submitted. In light of this, the Arsenal has requested that EPA withdraw the prior delisting rule. Based on its understanding of the changes at the facility, EPA is granting that request and removing the previously published delisting. Removal of the prior delisting rule does not preclude Watervliet Arsenal from submitting a new delisting petition.

DATES: This rule is effective on March 26, 2021.

FOR FURTHER INFORMATION CONTACT: Carlyn Chappel, U.S. EPA Region 2, Land, Chemical and Redevelopment Division (25TH FL), U.S. Environmental Protection Agency, 290 Broadway, New York, NY 10007–1866; telephone number: (212) 637–4104; email address: *chappel.carlyn@epa.gov.*

SUPPLEMENTARY INFORMATION: On January 10, 1986, at 57 FR 1253, the EPA finalized an exclusion from the list of hazardous wastes for Watervliet Arsenal in Watervliet, New York. EPA has received information from the facility indicating a change to its wastewater treatment process. The sulfur dioxide (SO_2) treatment process is being discontinued and converted to a sodium bisulfite treatment process as the primary industrial wastewater treatment plant (IWTP) system. The process and nature of sludge generated from the converted IWTP differs from what was described in the delisting petition submitted on Dec. 22, 1982 for the electroplating wastewater treatment sludges (EPA Hazardous Waste Code No. F006). Watervliet Arsenal has submitted a request to EPA on July 29, 2020 to formally withdraw the existing 1986 wastewater treatment sludge RCRA delisting rule previously issued for its facility. EPA acknowledges receipt of the information about these changes at the facility and the Arsenal's request. The Watervliet Arsenal, Watervliet, New York exclusion found in 40 CFR part 261, appendix IX, Table 1 will be removed from the Code of Federal Regulations. The text being removed currently reads: ''Wastewater treatment sludges (EPA Hazardous Waste No. F006) generated from electroplating operations after January 10, 1986.''

List of Subjects in 40 CFR Part 261

Environmental protection, Hazardous waste, Recycling, Reporting and recordkeeping Requirements.

Dated: March 15, 2021.

Walter Mugdan,

Acting Regional Administrator, EPA Region 2.

For the reasons set forth in the preamble, title 40, Chapter I of the *Code of Federal Regulations* is amended as follows:

PART 261—IDENTIFICATION AND LISTING OF HAZARDOUS WASTE

■ 1. The authority citation for part 261 continues to read as follows:

Authority: 42 U.S.C. 6905, 6912(a), 6921, 6922 and 6938.

Appendix IX to Part 261—[Amended]

■ 2. In Appendix IX to part 261, amend Table 1 by removing the entry for ''Watervliet Arsenal''.

[FR Doc. 2021–06003 Filed 3–25–21; 8:45 am]

BILLING CODE 6560–50–P

DEPARTMENT OF COMMERCE

National Oceanic and Atmospheric Administration

50 CFR Part 635

[Docket No. 191125–0090; RTID 0648–XA935]

Atlantic Highly Migratory Species; Commercial Aggregated Large Coastal Shark and Hammerhead Shark Management Group in the Atlantic Region; Retention Limit Adjustment

AGENCY: National Marine Fisheries Service (NMFS), National Oceanic and Atmospheric Administration (NOAA), Commerce.

ACTION: Temporary rule; inseason retention limit adjustment.

SUMMARY: NMFS is adjusting the commercial aggregated large coastal shark (LCS) and hammerhead shark management groups' retention limits for directed shark limited access permit holders in the Atlantic region from 36 to 55 LCS other than sandbar sharks per vessel per trip. This action is based on consideration of the regulatory determination criteria regarding inseason adjustments. The retention limit will remain at 55 LCS other than sandbar sharks per vessel per trip in the Atlantic region through the rest of 2021 or until NMFS announces via notification in the **Federal Register** another adjustment to the retention limit or a fishery closure. This retention limit adjustment affects anyone with a directed shark limited access permit fishing for LCS in the Atlantic region.

DATES: This retention limit adjustment is effective on March 23, 2021, through December 31, 2021, or until NMFS announces via notification in the **Federal Register** another adjustment to the retention limit or a fishery closure, if warranted.

FOR FURTHER INFORMATION CONTACT: Lauren Latchford at 301–427–8503; *lauren.latchford@noaa.gov.*

SUPPLEMENTARY INFORMATION: The Atlantic shark fishery is managed under the 2006 Consolidated Atlantic Highly Migratory Species (HMS) Fishery Management Plan (FMP), its amendments, and implementing regulations (50 CFR part 635) issued under authority of the Magnuson-Stevens Fishery Conservation and Management Act (16 U.S.C. 1801 *et seq.*).

The Atlantic shark fishery has separate regional (Gulf of Mexico and Atlantic) quotas for all management groups except those for blue shark, porbeagle shark, pelagic sharks (other than porbeagle or blue sharks), and the shark research fishery. The boundary between the Gulf of Mexico region and the Atlantic region is defined at § 635.27(b)(1) as a line beginning on the East Coast of Florida at the mainland at 25°20.4′ N lat., proceeding due east. Any water and land to the north and east of that boundary is considered, for the purposes of setting and monitoring quotas, to be within the Atlantic region. This inseason action only affects the aggregated LCS and hammerhead shark management groups in the Atlantic region.

Under § 635.24(a)(8), NMFS may adjust the commercial retention limits in the shark fishery during the fishing season. Before making any adjustment, NMFS must consider specified regulatory criteria (see § 635.24(a)(8)(i) through (vi)). After considering these criteria as discussed below, NMFS has concluded that increasing the retention limit for the Atlantic aggregated LCS and hammerhead management groups for directed shark limited access permit holders in the Atlantic region will allow use of available quotas for those groups. Therefore, NMFS is increasing the commercial Atlantic aggregated LCS and hammerhead shark retention limit in the Atlantic region from 36 to 55 LCS other than sandbar shark per vessel per trip.

NMFS considered the inseason retention limit adjustment criteria listed at § 635.24(a)(8)(i) through (vi), which include:

• The amount of remaining shark quota in the relevant region.

Based on dealer reports through March 19, 2021, approximately 10.8 metric tons (mt) dressed weight (dw) (23,904 lb dw), or 6 percent, of the 168.9 mt dw shark quota for the aggregated LCS management group and approximately 1.9 mt dw (4,252 lb dw), or 7 percent, of the 27.1 mt dw shark quota for the hammerhead shark management group have been harvested in the Atlantic region. This means that approximately 94 percent the aggregated LCS and 93 percent of the hammerhead shark quota remain available. NMFS is increasing the retention limit to 55 LCS other than sandbar shark per vessel per trip to facilitate the use of available quota.

• The catch rates in the relevant region.

Based on the current commercial retention limit and average catch rate, which is based on landings data from dealer reports, landings in the Atlantic region on a daily basis is low, and the overall available quota remains high Using current catch rates and comparing them to catch rates from last year, projections indicate that landings would not reach the quota before the end of 2021. A higher retention limit authorized under this action will provide increased fishing opportunities and facilitate use of available quota in the Atlantic region.

• The estimated date of fishery closure based on projections.

If landings of either the aggregated LCS or hammerhead shark management groups reach 80 percent of their respective quotas, and those landings are projected to reach 100 percent of the quota by the end of the year, NMFS would, as required by the regulations at § 635.28(b)(3), close the aggregated LCS and hammerhead shark management groups since they are ''linked quotas.'' However, without the adjustment undertaken in this action, current catch rates would likely result in both management groups remaining open for the remainder of the year with quota unused at the end of the year. The higher retention limit should increase the likelihood of full utilization of the quota in the Atlantic region, while also allowing both management groups to remain open for the remainder of the year.

• The effects of the adjustment on accomplishing the objectives of the 2006 Consolidated HMS FMP and its amendments.

Increasing the retention limit for the aggregated LCS and hammerhead management groups in the Atlantic region from 36 to 55 LCS other than sandbar sharks per vessel per trip would continue to allow for fishing opportunities throughout the rest of the year consistent with objectives established in the 2006 Consolidated HMS FMP and would manage these groups within previously-established, science-based quotas, consistent with requirements in relation to preventing overfishing and rebuilding overfished stocks.

• The variations in seasonal distribution, abundance, or migratory patterns of the relevant shark species.

The directed shark fishery in the Atlantic region is composed of a mix of species, with a high abundance of aggregated LCS caught in conjunction with hammerhead sharks. Migratory patterns of many LCS in the Atlantic region indicate that sharks move farther north in the summer and then return south in the fall. However, based on dealer reports through March 19, 2021, daily landings throughout the Atlantic region has been low. Therefore, NMFS is increasing the retention limit from 36 to 55 LCS other than sandbar sharks per vessel per trip in order to provide additional opportunities for fishermen to fully utilize the quota in the entire Atlantic region.

• The effects of catch rates in one part of a region precluding vessels in another part of that region from having a reasonable opportunity to harvest a portion of the relevant quota.

One of NMFS's goals for the 2021 commercial shark fishery is to facilitate fishing opportunities throughout the fishing season in the Atlantic region. While dealer reports indicate that, under current catch rates, the aggregated LCS and hammerhead shark management groups in the Atlantic region would remain open for the remainder of the year, the catch rates also indicate that the quotas would likely not be fully harvested under the current retention limit. If the harvest of these species is increased through an increased retention limit, NMFS estimates that the fishery would remain open for the remainder of the year and fishermen throughout the Atlantic region would have a reasonable opportunity to harvest a large portion of the quota.

On December 1, 2020 (85 FR 77007), NMFS announced in a final rule that the fishery for the aggregated LCS and hammerhead shark management groups for the Atlantic region would open on January 1 with a quota of 168.9 mt dw (372,552 lb dw) and 27.1 mt dw (59,736 lb dw), respectively, and a commercial retention limit of 36 LCS other than sandbar sharks per trip for directed shark limited access permit holders. NMFS explained that if it appeared that the quota is being harvested too quickly, thus potentially precluding fishing opportunities throughout the entire region (*e.g.,* if approximately 40 percent of the quota is caught at the beginning of the year), NMFS would consider reducing the commercial retention limit to 3 or fewer LCS other than sandbar sharks, and then later consider increasing the retention limit later in the year consistent with the applicable regulatory requirements. Based on dealer reports through March 19, 2021, approximately 94 of the aggregated LCS quota and 93 percent of the hammerhead shark quota remain unharvested, respectively. Commercial shark landings in the Atlantic region at this point in season are low. A higher retention limit should increase the likelihood of full utilization of available quota in the Atlantic region, while also allowing the fishery to operate for the remainder of the year.

Accordingly, as of March 23, 2021, NMFS is increasing the retention limit for the commercial aggregated LCS and hammerhead shark management groups in the Atlantic region for directed shark limited access permit holders from 36 to 55 LCS other than sandbar sharks per vessel per trip. This retention limit adjustment is not the applicable limit for directed shark limited access permit holders if the vessel is properly permitted to operate as a charter vessel or headboat for HMS and is engaged in a for-hire trip, in which case the recreational retention limits for sharks and ''no sale'' provisions apply (§ 635.22(a) and (c)); or if the vessel possesses a valid shark research permit under § 635.32 and a NMFS-approved observer is onboard, in which case the

restrictions noted on the shark research permit apply.

All other retention limits in the Atlantic region remain unchanged. This retention limit will remain at 55 LCS other than sandbar sharks per vessel per trip for the rest of 2021, or until NMFS announces another adjustment to the retention limit or a fishery closure via notification in the **Federal Register**, if warranted.

Classification

NMFS issues this action pursuant to section 305(d) of the Magnuson-Stevens Act. This action is required by 50 CFR part 635, which was issued pursuant to section 304(c), and is exempt from review under Executive Order 12866.

The Assistant Administrator for NMFS (AA) finds that it is impracticable and contrary to the public interest to provide prior notice of, and an opportunity for public comment on, this action for the following reasons:

Based on recent data, NMFS has determined that landings have been very low (6 percent of the 168.9 mt dw shark quota for aggregated LCS management group and 7 percent of the 27.1 mt dw shark quota for the hammerhead management group). Delaying this action for prior notice and public comment would unnecessarily limit opportunities to harvest available aggregated LCS management group and hammerhead shark management group quotas, which may have negative social and economic impacts for U.S. fishers. This action does not raise conservation and management concerns. Adjusting retention limits does not affect the overall aggregated LCS management group and hammerhead shark management groups quotas, and available data show the adjustment would have a minimal risk of exceeding the quotas set for the aggregated LCS and hammerhead shark management groups for the Atlantic region in the December 1, 2020 final rule (85 FR 77007). NMFS notes that the public had an opportunity to comment on the underlying rulemakings that established the quota and retention limit adjustment criteria. Therefore, the AA finds good cause under 5 U.S.C. 553(b)(B) to waive prior notice and the opportunity for public comment. For all of the above reasons, there is also good cause under 5 U.S.C. 553(d)(3) to waive the 30-day delay in effectiveness.

Authority: 16 U.S.C. 1801 *et seq.*

Dated: March 23, 2021.

Jennifer M. Wallace,

Acting Director, Office of Sustainable Fisheries, National Marine Fisheries Service.

[FR Doc. 2021–06310 Filed 3–23–21; 4:15 pm]

BILLING CODE 3510–22–P

DEPARTMENT OF COMMERCE

National Oceanic and Atmospheric Administration

50 CFR Part 648

[Docket No.: 210322–0061; RTID 0648–XX067]

Fisheries of the Northeastern United States; Atlantic Deep-Sea Red Crab Fishery; Final 2021 Atlantic Deep-Sea Red Crab Specifications

AGENCY: National Marine Fisheries Service (NMFS), National Oceanic and Atmospheric Administration (NOAA), Commerce.

ACTION: Final rule.

SUMMARY: We are finalizing specifications for the 2021 Atlantic deep-sea red crab fishery, including an annual catch limit and total allowable landings limit. This action is necessary to fully implement previously projected allowable red crab harvest levels that will prevent overfishing and allow harvesting of optimum yield. This action is intended to establish the allowable 2021 harvest levels, consistent with the Atlantic Deep-Sea Red Crab Fishery Management Plan.

DATES: The final specifications for the 2021 Atlantic deep-sea red crab fishery are effective April 26, 2021, through February 28, 2022.

FOR FURTHER INFORMATION CONTACT: Allison Murphy, Fishery Policy Analyst, (978) 281–9122.

SUPPLEMENTARY INFORMATION: The Atlantic deep-sea red crab fishery is managed by the New England Fishery Management Council. The Atlantic Deep-Sea Red Crab Fishery Management Plan includes a specification process that requires the New England Fishery Management Council to recommend an acceptable biological catch, an annual catch limit, and total allowable landings every 4 years. Collectively, these are the red crab specifications. Prior to the start of fishing year 2020, the Council recommended specifications for the 2020–2023 fishing years (Table 1).

TABLE 1—COUNCIL-APPROVED 2020–2023 RED CRAB SPECIFICATIONS

	Metric ton	Million lb
Acceptable Biological Catch	2,000	4.41
Annual Catch Limit	2,000	4.41
Total Allowable Landings	2,000	4.41

On April 14, 2020, we approved the Council-recommended specifications for the 2020 fishing year, effective through February 28, 2021, and we projected the continuation of those specifications for 2021–2023 (85 FR 20615). At the end of each fishing year, we evaluate catch information and determine if the quota has been exceeded. If a quota is exceeded, the regulations at 50 CFR 648.262(b) require a pound-for-pound reduction in a subsequent fishing year. We have reviewed available 2020 fishery information against the projected 2021 specifications. There have been no annual catch limit or total allowable landings overages, nor is there any new biological information that would require altering the projected 2021 specifications published in 2020. Based on this information, we are finalizing specifications for fishing year 2021, as projected in the 2020 specifications rule (85 FR 20615), and outlined above in Table 1. These specifications are not expected to result in overfishing, and they adequately account for scientific uncertainty.

Classification

The NMFS Assistant Administrator has determined that this final rule is consistent with the Atlantic Deep-Sea Red Crab Fishery Management Plan, the Magnuson-Stevens Fishery Conservation and Management Act, and other applicable law.

This rule is exempt from review under Executive Order 12866.

Pursuant to 5 U.S.C. 553(b)(B), we find good cause to waive prior public notice and opportunity for public comment on the catch limit and allocation adjustments, because

allowing time for notice and comment is unnecessary. The proposed rule for the 2020–2023 specifications provided the public with the opportunity to comment on the specifications, including the projected 2021 through 2023 specifications (85 FR 9717, February 20, 2020). We received no comments on the proposed rule announcing the projected 2021–2023 specification and the process for announcing finalized interim year quotas. Further, this final rule contains no changes from the projected 2021 specifications that were included in both the February 20, 2020, proposed rule and the April 14, 2020, final rule. The public and industry participants expect this action. Through both the proposed rule for the 2020–2023 specifications and the final rule for the 2020 specifications, we alerted the public that we would conduct a review of the latest available catch information in each of the interim years of the multi-year specifications, and announce the final quota prior to the March 1 start of the fishing year. Thus, the proposed and final rules that contained the projected 2021–2023 specifications provided a full opportunity for the public to comment on the substance and process of this action.

The Chief Counsel for Regulation, Department of Commerce, previously certified to the Chief Counsel for Advocacy of the Small Business Administration (SBA) that the 2020–2023 red crab specifications would not have a significant economic impact on a substantial number of small entities. Implementing the 2021 specifications will not change the conclusions drawn in that previous certification to the SBA. Because advance notice and the opportunity for public comment are not required for this action under the Administrative Procedure Act, or any other law, the analytical requirements of the Regulatory Flexibility Act, 5 U.S.C. 601, *et seq.,* do not apply to this rule. Therefore, no new regulatory flexibility analysis is required and none has been prepared.

This action does not contain a collection of information requirement for the purposes of the Paperwork Reduction Act.

Authority: 16 U.S.C. 1801 *et seq.*

Dated: March 23, 2021.

Samuel D. Rauch III,

Deputy Assistant Administrator for Regulatory Programs, National Marine Fisheries Service.

[FR Doc. 2021–06287 Filed 3–25–21; 8:45 am]

BILLING CODE 3510–22–P

DEPARTMENT OF COMMERCE

National Oceanic and Atmospheric Administration

50 CFR Part 648

[Docket No. 210323–0063; RTID 0648–XA803]

Revisions to Framework Adjustment 59 to the Northeast Multispecies Fishery Management Plan and Sector Annual Catch Entitlements; Correction

AGENCY: National Marine Fisheries Service (NMFS), National Oceanic and Atmospheric Administration (NOAA), Commerce.

ACTION: Final rule; adjustment to specifications; correction.

SUMMARY: This final rule distributes sector allocation carried over from fishing year 2019 into fishing year 2020 and corrects minor errors published in the final rule approving and implementing Framework Adjustment 59 to the Northeast Multispecies Fishery Management Plan. This action is necessary to correct errors published in the final rule and to allocate carryover quota to sectors. The carryover adjustments are routine and formulaic, and industry expects them each year.

DATES: Effective March 25, 2021, through April 30, 2021.

FOR FURTHER INFORMATION CONTACT: Spencer Talmage, Fishery Management Specialist, (978) 281–9232.

SUPPLEMENTARY INFORMATION: On July 30, 2020, we published a final rule approving Framework Adjustment 59 to the Northeast Multispecies Fishery Management Plan (FMP) (85 FR 45794; July 30, 2020), which set 2020–2022 annual catch limits (ACL) for four groundfish stocks, and 2020 ACLs for three shared U.S./Canada stocks. That action became effective on July 28, 2020. This rule corrects minor errors published in the Framework Adjustment 59 final rule and distributes unused sector quota carried over from fishing year 2019.

Corrections to Framework Adjustment 59

Tables 12 through 14 published in the Framework Adjustment 59 final rule announced the Percent Sector Contribution (PSC) and initial Annual Catch Entitlements (ACE) allocated to individual sectors based on the approved catch limits for fishing year 2020. These tables erroneously labeled the values for the Maine Permit Bank (MPB) as if they were the values for the Mooncusser sector, and vice versa. These sectors have had their correct allocations for the duration of fishing year 2020; the typographical error in Framework 59 and this rule correcting it have no effect on the operations of these sectors in any way. The corrected information appears in tables 1 through 3 below.

TABLE 1—CORRECTED FISHING YEAR 2020 PERCENT SECTOR CONTRIBUTION AND ANNUAL CATCH ENTITLEMENT FOR THE MAINE PERMIT BANK AND MOONCUSSER SECTORS, TABLES 12 THROUGH 14 IN FRAMEWORK ADJUSTMENT 59

Sector name	Maine Permit Bank			Mooncusser		
MRI count	11			40		
	Percent sector contribution	ACE (in 1,000 lb)	ACE (in metric tons)	Percent sector contribution	ACE (in 1,000 lb)	ACE (in metric tons)
GB Cod	0.13361103	1	0	11.87404994	49	22
GB Cod East	N/A	3	1	N/A	231	105
GOM Cod	1.15503867	7	3	3.36592802	20	9
GB Haddock	0.04432773	16	7	3.72602983	1,331	604
GB Haddock East	N/A	103	47	N/A	8,680	3,937
GOM Haddock	1.12455699	299	136	3.03406286	807	366
GB Yellowtail Flounder	0.01377701	0	0	0.38302570	1	0
SNE/MA Yellowtail Flounder	0.03180705	0	0	0.32527727	0	0
CC/GOM Yellowtail Flounder	0.31794656	5	2	2.58549375	39	18
Plaice	1.16407583	75	34	0.76474219	50	22

TABLE 1—CORRECTED FISHING YEAR 2020 PERCENT SECTOR CONTRIBUTION AND ANNUAL CATCH ENTITLEMENT FOR THE MAINE PERMIT BANK AND MOONCUSSER SECTORS, TABLES 12 THROUGH 14 IN FRAMEWORK ADJUSTMENT 59—Continued

Sector name	Maine Permit Bank			Mooncusser		
MRI count	11			40		
	Percent sector contribution	ACE (in 1,000 lb)	ACE (in metric tons)	Percent sector contribution	ACE (in 1,000 lb)	ACE (in metric tons)
Witch Flounder	0.72688452	21	10	1.71821481	50	23
GB Winter Flounder	0.00021715	0	0	0.89399263	10	5
GOM Winter Flounder	0.42662327	3	1	2.48392191	16	7
SNE/MA Winter Flounder	0.01789120	0	0	2.26957436	27	12
Redfish	0.82190532	204	92	2.65202110	657	298
White Hake	1.65422882	74	33	5.80626985	258	117
Pollock	1.69505501	896	407	5.44388052	2,879	1,306

Sector Carryover Allocations From Fishing Year 2019

Carryover regulations at 50 CFR 648.87(b)(1)(i)(C) allow each groundfish sector to carry over an amount of unused ACE equal to 10 percent of the sector's original ACE for each stock (except for Georges Bank (GB) yellowtail flounder) that is unused at the end of the fishing year into the following fishing year. However, we are authorized to adjust ACE carryover to ensure that the total unused ACE combined with the overall sub-ACL does not exceed the Acceptable Biological Catch (ABC) for the fishing year in which the carryover may be harvested. We have completed 2019 fishing year data reconciliation with sectors and determined final 2019 fishing year sector catch and the amount of allocation that sectors may carry over from the 2019 to the 2020 fishing year. A sector may carry over up to 10 percent of unused ACE for each stock, with a few exceptions. The amount of unused ACE may have been reduced so as not to exceed the ABC. Accordingly, unused ACE from fishing year 2019 available to carry over to 2020 was reduced for the following stocks: GB cod, Gulf of Maine (GOM) cod, Southern New England/Mid-Atlantic (SNE/MA) yellowtail flounder; Cape Cod/GOM yellowtail flounder; GB winter flounder; GOM winter flounder; SNE/MA winter flounder; redfish; white hake; and pollock. For GB haddock, GOM haddock, and American plaice, NMFS published an emergency action on December 31, 2020 (85 FR 86849) which authorized us to increase the maximum amount of carryover for those stocks above 10 percent of unused ACE from fishing year 2019 to an amount not to exceed the ABC. Complete details on carryover reduction percentages can be found at: *https://www.greateratlantic.fisheries.noaa.gov/ro/fso/reports/h/groundfish_catch_accounting*. Table 2 includes the maximum amount of allocation that sectors may carry over from the 2019 to the 2020 fishing year.

Table 3 includes the *de minimis* amount of carryover for each sector for the 2020 fishing year. If the overall ACL for any allocated stock is exceeded for the 2020 fishing year, the allowed carryover harvested by a sector, minus the pounds in the sector's *de minimis* amount, will be counted against its allocation to determine whether an overage subject to an accountability measure occurred. Tables 4 and 5 list the final ACE available to sectors for the 2020 fishing year, including finalized carryover amounts for each sector, as adjusted down when necessary to equal each stock's ABC.

Table 2 -- Finalized Carryover ACE from Fishing Year 2019 to Fishing Year 2020 (lb)

	GB Cod East	GB Cod West	GOM Cod	GB Haddock East	GB Haddock West	GOM Haddock	GB Yellowtail Flounder	SNE/MA Yellowtail Flounder	CC/GOM Yellowtail Flounder	Plaice	Witch Flounder	GB Winter Flounder	GOM Winter Flounder	SNE/MA Winter Flounder	Redfish	White Hake	Pollock
FGS	0	21,392	564	0	364,306	5,342	0	19	1,824	2,455	2,360	26	4,458	968	8,625	3,344	109,318
MCCS	0	3,042	8,535	0	464,092	223,807	0	41	2,873	45,072	10,658	371	1,224	1,325	114,195	38,776	360,370
MOON	0	15,981	2,499	0	604,041	76,421	0	4	2,018	845	302	3	853	1,079	35,623	10,926	155,048
NEFS 2	0	8,568	20,306	0	1,584,482	588,014	0	51	21,476	41,604	20,772	1,183	8,878	3,078	205,885	27,807	427,142
NEFS 4	0	5,415	1,963	0	789,938	221,921	0	62	5,162	34,484	2,300	254	2,461	625	87,639	0	187,448
NEFS 5	0	626	0	0	120,595	90	0	552	172	1,585	969	160	4	8,670	191	276	1,214
NEFS 6	0	3,979	2,290	0	495,610	106,304	0	127	3,053	16,112	7,276	561	1,594	1,256	89,884	2,616	104,324
NEFS 7	0	15,528	2,238	0	1,559,771	186,444	0	217	8,260	34,341	17,240	11,026	1,004	10,562	119,572	18,629	179,699
NEFS 8	0	10,144	818	0	1,090,391	17,025	0	243	4,821	10,855	5,385	7,978	1,627	7,449	11,418	3,059	33,412
NEFS 10	0	686	1,731	0	26,133	32,118	0	15	3,461	3,923	3,832	3	3,098	432	4,421	1,918	21,785
NEFS 11	0	521	9,159	0	5,154	72,274	0	0	2,126	6,229	2,650	1	749	15	25,669	13,192	254,257
NEFS 12	0	821	2,127	0	13,862	25,529	0	0	6,604	1,843	1,069	0	2,647	156	2,995	824	22,137
NEFS 13	0	15,224	411	0	3,013,398	23,750	0	633	5,141	31,025	16,341	6,366	672	10,965	56,940	6,267	74,996
SHS1	0	2,951	2,316	0	291,186	91,349	0	3	2,825	16,045	6,263	2,082	1,560	578	38,123	12,405	91,342
SHS2	0	1,098	3,577	0	143,751	79,212	0	85	2,268	4,632	4,204	235	1,068	1,426	45,044	7,385	167,674
SHS3	0	19,678	5,392	0	3,979,390	710,758	0	144	7,272	90,666	41,010	5,015	1,165	13,137	456,699	86,256	594,264
Total	0	125,654	63,926	0	14,546,100	2,460,358	0	2,196	79,356	341,716	142,631	35,264	33,062	61,721	1,302,923	233,680	2,784,430

Georges Bank Cod Fixed Gear Sector (FGS), Maine Coast Community Sector (MCCS), Mooncusser Sector (MOON), Maine Permit Bank (MPB), New Hampshire Permit Bank (NHPB), Northeast Coastal Communities Sector (NCCS), Northeast Fishery Sectors (NEFS), and Sustainable Harvest Sector (SHS)

Table 3 -- *De Minimis* Carryover ACE from Fishing Year 2019 to Fishing Year 2020 (lb)

	GB Cod East	GB Cod West	GOM Cod	GB Haddock East	GB Haddock West	GOM Haddock	GB Yellowtail Flounder	SNE/MA Yellowtail Flounder	CC/GOM Yellowtail Flounder	Plaice	Witch Flounder	GB Winter Flounder	GOM Winter Flounder	SNE/MA Winter Flounder	Redfish	White Hake	Pollock
FGS	0	2,963	45	0	51,539	553	0	2	325	336	336	8	802	142	1,408	470	17,905
MCCS	0	551	723	0	84,316	23,910	0	5	558	7,953	2,801	116	236	219	21,253	5,884	66,756
MOON	0	2,808	204	0	100,105	8,065	0	1	392	495	302	3	157	270	6,567	2,585	28,791
NEFS 2	0	1,539	1,630	0	287,136	59,739	0	6	3,808	7,209	4,214	371	1,554	501	38,251	4,170	78,443
NEFS 4	0	1,751	676	0	156,293	23,591	0	8	969	6,162	2,300	80	469	118	16,523	0	36,309
NEFS 5	0	114	0	0	21,911	10	0	68	31	280	162	50	1	1,430	36	42	225
NEFS 6	0	746	191	0	96,353	11,713	0	17	690	2,968	1,746	198	322	226	16,867	2,014	19,402
NEFS 7	0	684	51	0	63,054	4,823	0	7	192	1,949	608	912	18	346	6,365	945	9,034
NEFS 8	0	1,972	74	0	208,040	1,934	0	24	995	2,112	1,062	2,751	311	1,148	2,263	476	6,367
NEFS 10	0	124	150	0	4,748	3,408	0	2	649	700	591	1	575	71	829	292	4,037
NEFS 11	0	94	750	0	937	7,628	0	0	383	1,100	478	0	135	3	4,812	2,004	47,098
NEFS 12	0	149	174	0	2,519	2,694	0	0	1,189	326	164	0	476	26	561	125	4,101
NEFS 13	0	2,796	47	0	550,218	2,576	0	79	988	5,516	2,666	1,999	135	1,858	10,859	992	13,991
SHS1	0	537	180	0	60,937	10,163	0	0	330	3,472	1,117	649	208	89	7,407	1,973	14,223
SHS2	0	579	294	0	33,319	8,238	0	10	631	2,194	856	235	273	410	7,692	2,648	33,055
SHS3	0	5,518	547	0	909,913	87,017	0	45	2,290	19,494	8,036	3,401	295	3,619	100,599	14,907	134,359
Total	0	22,925	5,736	0	2,631,338	256,062	0	274	14,420	62,266	27,439	10,774	5,967	10,476	242,292	39,527	514,096

Table 4 -- Total ACE Available to Sectors in Fishing Year 2020 including Final Carryover (mt)

	GB Cod East	GB Cod West	GOM Cod	GB Haddock East	GB Haddock West	GOM Haddock	GB Yellowtail Flounder	SNE/MA Yellowtail Flounder	CC/GOM Yellowtail Flounder	Plaice	Witch Flounder	GB Winter Flounder	GOM Winter Flounder	SNE/MA Winter Flounder	Redfish	White Hake	Pollock
FGS	24	120	2	311	2,192	27	1	0	16	16	16	0	38	7	68	23	862
MCCS	4	22	37	508	3,527	1,186	2	0	27	381	132	5	11	11	1,016	284	3,191
MOON	22	112	10	604	4,211	400	0	0	19	23	23	5	8	13	314	122	1,376
MPB	0	1	3	7	47	136	0	0	2	34	10	0	1	0	92	33	407
NEFS 2	12	61	83	1,731	12,012	2,976	2	0	182	346	201	17	75	24	1,828	202	3,752
NEFS 4	14	68	32	942	6,505	1,171	2	0	46	295	117	4	22	6	789	167	1,732
NEFS 5	1	5	0	132	916	0	1	3	1	13	8	2	0	69	2	2	11
NEFS 6	6	30	10	581	4,014	580	3	1	33	142	82	9	15	11	806	93	927
NEFS 7	5	33	3	380	3,187	303	7	0	12	104	35	46	1	20	343	51	491
NEFS 8	16	78	4	1,254	8,677	95	16	1	47	101	51	128	15	55	108	23	304
NEFS 10	1	5	8	29	199	169	0	0	31	34	29	0	28	3	40	14	193
NEFS 11	1	4	38	6	39	379	0	0	18	53	23	0	6	0	230	97	2,252
NEFS 12	1	6	9	15	105	134	0	0	57	16	8	0	23	1	27	6	196
NEFS 13	22	111	2	3,318	23,007	128	33	4	47	264	128	94	6	89	518	48	669
NHPB	0	0	3	0	0	4	0	0	0	1	0	0	0	0	2	2	27
SHS 1	4	21	9	367	2,529	502	1	0	16	165	54	30	10	4	353	95	687
SHS 2	5	22	15	201	1,376	410	3	1	30	102	41	19	13	19	369	123	1,575
SHS 3	44	215	27	5,487	37,591	4,269	21	2	107	925	383	157	14	170	4,770	715	6,364
Total	183	915	296	15,874	110,134	12,870	92	13	692	3,014	1,339	518	287	503	11,676	2,101	25,015

Table 5 -- Total ACE Available to Sectors in Fishing Year 2020 with including Final Carryover (1,000 lb)

	GB Cod East	GB Cod West	GOM Cod	GB Haddock East	GB Haddock West	GOM Haddock	GB Yellowtail Flounder	SNE/MA Yellowtail Flounder	CC/GOM Yellowtail Flounder	Plaice	Witch Flounder	GB Winter Flounder	GOM Winter Flounder	SNE/MA Winter Flounder	Redfish	White Hake	Pollock
FGS	52	266	5	685	4,833	61	2	0	34	36	36	1	85	15	149	50	1,900
MCCS	10	48	81	1,121	7,775	2,615	4	1	59	840	291	12	25	23	2,239	627	7,036
MOON	49	247	23	1,331	9,284	883	1	0	41	50	50	10	17	28	692	269	3,034
MPB	1	3	7	16	103	299	0	0	5	75	21	0	3	0	204	74	896
NEFS 2	27	135	183	3,817	26,481	6,562	4	1	402	763	442	38	164	53	4,031	445	8,271
NEFS 4	31	150	70	2,078	14,342	2,581	5	1	102	651	258	8	49	12	1,740	368	3,818
NEFS 5	2	10	0	291	2,020	1	3	7	3	30	17	5	0	152	4	4	24
NEFS 6	13	65	21	1,281	8,850	1,278	7	2	72	313	182	20	34	24	1,777	204	2,044
NEFS 7	12	72	7	838	7,027	669	14	1	27	229	78	102	3	45	756	113	1,083
NEFS 8	35	173	8	2,766	19,129	210	36	3	104	222	112	283	33	122	238	51	670
NEFS 10	2	11	17	63	438	373	0	0	68	74	63	0	61	8	87	31	426
NEFS 11	2	8	84	12	86	835	0	0	40	116	50	0	14	0	507	214	4,964
NEFS 12	3	13	20	33	232	295	0	0	125	34	17	0	50	3	59	13	432
NEFS 13	49	246	5	7,314	50,721	281	73	9	104	583	283	206	14	197	1,143	105	1,474
NHPB	0	0	7	0	0	9	0	0	0	2	0	0	0	0	5	4	59
SHS 1	9	47	20	810	5,575	1,108	2	0	36	363	118	67	22	9	779	210	1,514
SHS 2	10	49	33	443	3,033	903	7	1	65	224	90	42	28	42	814	272	3,473
SHS 3	97	474	60	12,096	82,875	9,412	46	5	236	2,040	845	345	31	375	10,517	1,577	14,030
Total	403	2,018	652	34,996	242,803	28,374	203	30	1,526	6,646	2,953	1,141	633	1,109	25,740	4,632	55,149

Classification

The NMFS Assistant Administrator has determined that this rule is consistent with the Northeast Multispecies FMP, other provisions of the Magnuson-Stevens Fishery Conservation and Management Act, and other applicable laws.

This rule is exempt from the procedures of Executive Order 12866 because this action contains no implementing regulations.

Pursuant to 5 U.S.C. 553(b)(3)(B), we find good cause to waive prior public notice and opportunity for public comment on the minor corrections and allocation adjustments because allowing time for notice and comment is impracticable, unnecessary, and contrary to the public interest. We also find good cause to waive the 30-day delay in effectiveness pursuant to 5 U.S.C. 553(d)(1) and (3), so that this final rule may become effective in a timely manner and the fishery may maximize the economic benefits of the adjusted allocations to the fishery.

Notice and comment and a 30-day delay in effectiveness would be impracticable, unnecessary, and contrary to the public interest. The distribution of unused quota carried over from the previous fishing year is an annual adjustment action that is expected by industry. These adjustments increase available catch. They are routine, formulaic, and authorized by regulation. Delaying these adjustments would result in a delay in the distribution of unused carryover to sectors, and could negate or reduce the intended economic benefits and increased operational flexibility of the rule. We only recently finalized carryover for 2020 based on data available in the late fall and an emergency action which published on December 31, 2020 (85 FR 86849). The adjustments in this rule are necessary to correct minor errors made in the Framework Adjustment 59 final rule. Correcting these errors is not subject to our discretion, so there would be no benefit to allowing time for notice and comment. Immediate implementation corrects information published in Framework Adjustment 59 and provides industry with the most accurate information. Delaying these adjustments could cause confusion to industry. The need for these corrections was discovered only recently, so quicker action on our part was not possible.

Also, because advanced notice and the opportunity for public comment are not required for this action under the Administrative Procedure Act, or any other law, the analytical requirements of the Regulatory Flexibility Act, 5 U.SC. 601, *et seq.,* do not apply to this rule.

This final rule contains no information collection requirements under the Paperwork Reduction Act of 1995.

Authority: 16 U.S.C. 1801 *et seq.*

Dated: March 23, 2021.

Samuel D. Rauch III,

Deputy Assistant Administrator for Regulatory Programs, National Marine Fisheries Service.

[FR Doc. 2021–06295 Filed 3–25–21; 8:45 am]

BILLING CODE 3510–22–P

Proposed Rules

Federal Register
Vol. 86, No. 57
Friday, March 26, 2021

This section of the FEDERAL REGISTER contains notices to the public of the proposed issuance of rules and regulations. The purpose of these notices is to give interested persons an opportunity to participate in the rule making prior to the adoption of the final rules.

DEPARTMENT OF AGRICULTURE

Agricultural Marketing Service

7 CFR Part 925

[Doc. No. AMS–SC–20–0093; SC21–925–1 PR]

Grapes Grown in a Designated Area of Southeastern California; Increased Assessment Rate

AGENCY: Agricultural Marketing Service, USDA.

ACTION: Proposed rule.

SUMMARY: This proposed rule would implement a recommendation from the California Desert Grape Administrative Committee (Committee) to increase the assessment rate established for the 2021 and subsequent fiscal periods. The proposed assessment rate would remain in effect indefinitely unless modified, suspended, or terminated.

DATES: Comments must be received by May 10, 2021.

ADDRESSES: Interested persons are invited to submit written comments concerning this proposed rule. Comments must be sent to the Docket Clerk, Marketing Order and Agreement Division, Specialty Crops Program, AMS, USDA, 1400 Independence Avenue SW, STOP 0237, Washington, DC 20250–0237; or internet: *https://www.regulations.gov.* Comments should reference the document number and the date and page number of this issue of the **Federal Register** and will be available for public inspection in the Office of the Docket Clerk during regular business hours, or can be viewed at: *https://www.regulations.gov.* All comments submitted in response to this rule will be included in the record and will be made available to the public. Please be advised that the identity of the individuals or entities submitting the comments will be made public on the internet at the address provided above.

FOR FURTHER INFORMATION CONTACT: Bianca Bertrand, Management, Program Analyst, California Marketing Field Office or Andrew Hatch, Deputy Director, Marketing Order and Agreement Division, Specialty Crops Program, AMS, USDA; Telephone: (559) 487–5901 or email: *BiancaM.Bertrand@usda.gov* or *Andrew.Hatch@usda.gov.*

Small businesses may request information on complying with this regulation by contacting Richard Lower, Marketing Order and Agreement Division, Specialty Crops Program, AMS, USDA, 1400 Independence Avenue SW, STOP 0237, Washington, DC 20250–0237; Telephone: (202) 720–2491, Fax: (202)720–8938, or email: *Richard.Lower@usda.gov.*

SUPPLEMENTARY INFORMATION: This action, pursuant to 5 U.S.C. 553, proposes to amend regulations issued to carry out a marketing order as defined in 7 CFR 900.2(j). This proposed rule is issued under Marketing Agreement and Order No. 925, as amended (7 CFR part 925), regulating the handling of grapes grown in a designated area of southeastern California. Part 925 (referred to as the ''Order'') is effective under the Agricultural Marketing Agreement Act of 1937, as amended (7 U.S.C. 601–674), hereinafter referred to as the ''Act.'' The Committee locally administers the Order and is comprised of producers and handlers of grapes operating within the production area, and a public member.

The Department of Agriculture (USDA) is issuing this proposed rule in conformance with Executive Orders 13563 and 13175. This proposed rule falls within a category of regulatory actions that the Office of Management and Budget (OMB) exempted from Executive Order 12866 review.

This proposed rule has been reviewed under Executive Order 12988, Civil Justice Reform. Under the Order now in effect, grape handlers in a designated area of southeastern California are subject to assessments. Funds to administer the Order are derived from such assessments. It is intended that the assessment rate would be applicable to all assessable grapes for the 2021 fiscal period and continue until amended, suspended, or terminated.

The Act provides that administrative proceedings must be exhausted before parties may file suit in court. Under section 608c(15)(A) of the Act, any handler subject to an order may file with USDA a petition stating that the order, any provision of the order, or any obligation imposed in connection with the order is not in accordance with law and request a modification of the order or to be exempted therefrom. Such a handler is afforded the opportunity for a hearing on the petition. After the hearing, USDA would rule on the petition. The Act provides that the district court of the United States in any district in which the handler is an inhabitant, or has his or her principal place of business, has jurisdiction to review USDA's ruling on the petition, provided an action is filed no later than 20 days after the date of the entry of the ruling.

This proposed rule would increase the assessment rate from $0.020 per 18-pound lug of assessable grapes handled, the rate that was established for the 2018 and subsequent fiscal periods, to $0.040 per 18-pound lug of assessable grapes handled for the 2021 and subsequent fiscal periods.

The Order authorizes the Committee, with the approval of USDA, to formulate an annual budget of expenses and collect assessments from handlers to administer the program. The members are familiar with the Committee's needs and with the costs of goods and services in their local area and are in a position to formulate an appropriate budget and assessment rate. The assessment rate is formulated and discussed in a public meeting. Thus, all directly affected persons have an opportunity to participate and provide input.

For the 2018 and subsequent fiscal periods, the Committee recommended, and USDA approved, an assessment rate of $0.020 per 18-pound lug of assessable grapes handled. That assessment rate continues in effect from fiscal period to fiscal period unless modified, suspended, or terminated by USDA upon recommendation and information submitted by the Committee or other information available to USDA.

The Committee met on November 4, 2020, and unanimously recommended expenditures of $85,500, and an assessment rate of $0.040 per 18-pound lug of assessable grapes handled for the 2021 and subsequent fiscal periods. In comparison, last year's budgeted expenditures were $121,100. The proposed assessment rate of $0.040 is $0.020 higher than the rate currently in effect. The Committee recommended increasing the assessment rate to provide adequate income to cover the

Committee's budgeted expenses for the 2021 fiscal period, as well as add funds to the contingency reserve. Funds in the reserve are expected to be approximately $50,100 at the end of the 2021 fiscal period, which is within the Order's requirement to carryover no more than approximately one fiscal period's budgeted expenses.

The major expenditures recommended by the Committee for the 2021 fiscal period include $50,000 for management and compliance expenses; $19,500 for direct office expenses; $16,000 for shared office, facilities, and maintenance expenses.

Budgeted expenses for these items for the 2020 fiscal period were $56,000 for management and compliance expenses; $20,700 for direct office expenses; $15,900 for shared office, facilities, and maintenance expenses; and $28,500 for production research.

The Committee determined that the contingency reserve fund had grown too large, so they used $37,100 from it to help fund the 2020 budget rather than raise their assessment rate.

The Committee derived the recommended assessment rate by considering anticipated expenses; an estimated crop of 2.5 million 18-pound lugs of assessable grapes; and the amount of funds available in the authorized contingency reserve. Income derived from handler assessments, calculated at $100,000 (2.5 million 18-pound lugs of assessable grapes multiplied by $0.040 assessment rate), would be adequate to cover budgeted expenses of $85,500, as well as add a small amount of funds ($14,500) back into the contingency reserve. Funds in the reserve are estimated to be $50,100 at the end of the 2021 fiscal period.

The assessment rate proposed in this rule would continue in effect indefinitely unless modified, suspended, or terminated by USDA upon recommendation and information submitted by the Committee or other available information.

Although this assessment rate would be in effect for an indefinite period, the Committee will continue to meet prior to or during each fiscal period to recommend a budget of expenses and consider recommendations for modification of the assessment rate. The dates and times of Committee meetings are available from the Committee or USDA. Committee meetings are open to the public and interested persons may express their views at these meetings. USDA would evaluate Committee recommendations and other available information to determine whether modification of the assessment rate is needed. Further rulemaking would be undertaken as necessary. The Committee's 2021 fiscal period budget, and those for subsequent fiscal periods, would be reviewed and, as appropriate, approved by USDA.

Initial Regulatory Flexibility Analysis

Pursuant to requirements set forth in the Regulatory Flexibility Act (RFA) (5 U.S.C. 601–612), the Agricultural Marketing Service (AMS) has considered the economic impact of this proposed rule on small entities. Accordingly, AMS has prepared this initial regulatory flexibility analysis.

The purpose of the RFA is to fit regulatory actions to the scale of businesses subject to such actions in order that small businesses will not be unduly or disproportionately burdened. Marketing orders issued pursuant to the Act, and the rules issued thereunder, are unique in that they are brought about through group action of essentially small entities acting on their own behalf.

There are approximately 10 handlers subject to the regulation under the Order, and approximately 21 producers of grapes in the production area. Small agricultural producers are defined by the Small Business Administration (SBA) as those having annual receipts of less than $1,000,000, and small agricultural service firms have been defined as those whose annual receipts are less than $30,000,000 (13 CFR 121.201).

According to the Committee data, USDA Market News Shipping Point Data, and National Agricultural Statistics Service (NASS), the national average producer price data released in 2020 for the 2019 production year was approximately $10.62 per 18-pound lug. Assuming that the 2020 producer price remains the same as that for 2019, and using Committee data for the 2020 total grape production of 2,448,021 18-pound lugs, the total 2020 value of the grape crop was $25,997,983 (2,448,021 18-pound lugs times $10.62 per 18-pound lug equals $25,997,983). Dividing the total grape crop value by the estimated number of producers (21) yields an estimated average receipt per producer of $1,237,999, which is above the SBA threshold for small producers.

According to USDA Market News data, the reported terminal price for 2020 for grapes ranged between $18.95 to $24.95 per 18-pound lug. The average of this range is $21.95 ($18.95 plus $24.95 divided by 2). Multiplying the 2020 grape total production of 2,448,021 18-pound lugs by the estimated average price per 18-pound lug of $21.95 equals $53,734,061.

Dividing this figure by 10 regulated handlers yields estimated average annual handler receipts of $5,373,406, which is below the SBA threshold for small agricultural service firms. Therefore, using the above data, the majority of producers may be considered large entities, and handlers of grapes in the production area may be classified as small entities.

Based upon information from NASS, the grower price reported for grapes in 2019 was $1,180 per ton ($10.62 per 18-pound lug) of grapes. In order to determine the estimated assessment revenue as a percentage of the total grower revenue, we calculate the assessment rate ($0.040 per 18-pound lug) times the estimated production (2,500,000 18-pound lugs), which equals the assessment revenue of $100,000.

The grower revenue is calculated by multiplying the grower price of $10.62 per 18-pound lug times the estimated production (2,500,000 18-pound lugs), which equals the grower revenue of $26,550,000.

In the final step, dividing the assessment revenue by the grower revenue indicates that, for the 2021 fiscal period, the estimated assessment revenue as a percentage of total grower revenue would be about 0.38 percent.

This proposal would increase the assessment rate collected from handlers for the 2021 and subsequent fiscal periods from $0.020 to $0.040 per 18-pound lug of assessable grapes handled. The Committee unanimously recommended 2021 expenditures of $85,500 and an assessment rate of $0.040 per 18-pound lug of assessable grapes handled. The proposed assessment rate of $0.040 per 18-pound lug of assessable grapes handled is $0.020 higher than the current rate. The volume of assessable grapes for the 2021 fiscal period is estimated to be 2,500,000 18-pound lugs. Thus, the $0.040 per 18-pound lug of assessable grapes handled should provide $100,000 in assessment income (2,500,000 multiplied by $0.040). Income derived from handler assessments would be adequate to cover budgeted expenses for the 2021 fiscal period.

The major expenditures recommended by the Committee for the 2021 fiscal period include $50,000 for management and compliance expenses; $19,500 for direct office expenses; $16,000 for shared office, facilities, and maintenance expenses. Budgeted expenses for the 2020 fiscal period were $56,000 for management and compliance; $20,700 for direct office; $15,900 for shared office, facilities, and

maintenance; and $28,500 for production research.

The Committee recommended increasing the assessment rate to provide adequate income to cover the Committee's budgeted expenses for the 2021 fiscal period, while adding funds to its financial reserve. This action would maintain the Committee's reserve balance at a level that the Committee believes is appropriate and meets the requirements of the Order.

Prior to arriving at this budget and assessment rate recommendation, the Committee discussed various alternatives, including maintaining the current assessment rate of $0.020 per 18-pound lug of assessable grapes handled, and increasing the assessment rate by a different amount. However, the Committee determined that the recommended assessment rate would fully fund budgeted expenses and add funds to the contingency reserve.

This proposed rule would increase the assessment obligation imposed on handlers. Assessments are applied uniformly on all handlers, and some of the costs may be passed on to producers. However, these costs would be offset by the benefits derived by the operation of the Order.

The Committee's meeting was widely publicized throughout the industry. All interested persons were invited to attend the meeting and encouraged to participate in Committee deliberations on all issues. Like all Committee meetings, the November 4, 2020, meeting was a public meeting, and all entities, both large and small, were able to express views on this issue. Interested persons are invited to submit comments on this proposed rule, including the regulatory and information collection impacts of this action on small businesses.

In accordance with the Paperwork Reduction Act of 1995 (44 U.S.C. Chapter 35), the Order's information collection requirements have been previously approved by OMB and assigned OMB No. 0581–0189, Fruit Crops. No changes in those requirements would be necessary as a result of this proposed rule. Should any changes become necessary, they would be submitted to OMB for approval.

This proposed rule would not impose any additional reporting or recordkeeping requirements on either small or large southeastern California grape handlers. As with all Federal marketing order programs, reports and forms are periodically reviewed to reduce information requirements and duplication by industry and public sector agencies.

AMS is committed to complying with the E-Government Act, to promote the use of the internet and other information technologies to provide increased opportunities for citizen access to Government information and services, and for other purposes.

USDA has not identified any relevant Federal rules that duplicate, overlap, or conflict with this proposed rule.

A small business guide on complying with fruit, vegetable, and specialty crop marketing agreements and orders may be viewed at: *https://www.ams.usda.gov/rules-regulations/moa/small-businesses.* Any questions about the compliance guide should be sent to Richard Lower at the previously mentioned address in the **FOR FURTHER INFORMATION CONTACT** section.

A 45-day comment period is provided to allow interested persons to respond to this proposed rule. All written comments timely received will be considered before a final determination is made on this matter.

List of Subjects in 7 CFR Part 925

Grapes, Marketing agreements, Reporting and recordkeeping requirements.

For the reasons set forth in the preamble, AMS proposes to amend 7 CFR part 925 as follows:

PART 925—GRAPES GROWN IN A DESIGNATED AREA OF SOUTHEASTERN CALIFORNIA.

■ 1. The authority citation for 7 CFR part 925 continues to read as follows:

Authority: 7 U.S.C. 601–674.

■ 2. Section 925.215 is revised to read as follows:

§ 925.215 Assessment rate.

On and after January 1, 2021, an assessment rate of $0.040 per 18-pound lug is established for grapes grown in a designated area of southeastern California.

Bruce Summers, Administrator,

Agricultural Marketing Service.

[FR Doc. 2021–06222 Filed 3–25–21; 8:45 am]

BILLING CODE 3410–02–P

NUCLEAR REGULATORY COMMISSION

10 CFR Part 50

[NRC–2018–0290]

RIN 3150–AK22

American Society of Mechanical Engineers 2019–2020 Code Editions

AGENCY: Nuclear Regulatory Commission.

ACTION: Proposed rule.

SUMMARY: The U.S. Nuclear Regulatory Commission (NRC) is proposing to amend its regulations to incorporate by reference the 2019 Edition of the American Society of Mechanical Engineers Boiler and Pressure Vessel Code and the 2020 Edition of the American Society of Mechanical Engineers Operation and Maintenance of Nuclear Power Plants, Division 1: OM Code: Section IST, for nuclear power plants. The NRC is also proposing to incorporate by reference the 2011 Addenda to ASME NQA–1–2008, Quality Assurance Requirements for Nuclear Facility Applications (ASME NQA–1b–2011), and the 2012 and 2015 Editions of ASME NQA–1, Quality Assurance Requirements for Nuclear Facility Applications. This action is in accordance with the NRC's policy to periodically update the regulations to incorporate by reference new editions of the American Society of Mechanical Engineers Codes and is intended to maintain the safety of nuclear power plants and to make NRC activities more effective and efficient.

DATES: Submit comments by May 25, 2021. Comments received after this date will be considered if it is practical to do so, but the NRC is able to ensure consideration only for comments received on or before this date.

ADDRESSES: You may submit comments by any of the following methods (unless this document describes a different method for submitting comments on a specific subject):

- *Federal Rulemaking Website:* Go to *https://www.regulations.gov* and search for Docket ID NRC–2018–0290. Address questions about NRC dockets to Dawn Forder; telephone: 301–415–3407; email: *Dawn.Forder@nrc.gov.* For technical questions contact the individuals listed in the **FOR FURTHER INFORMATION CONTACT** section of this document.
- *Email comments to: Rulemaking.Comments@nrc.gov.* If you do not receive an automatic email reply confirming receipt, then contact us at 301–415–1677.

For additional direction on obtaining information and submitting comments, see ''Obtaining Information and Submitting Comments'' in the **SUPPLEMENTARY INFORMATION** section of this document.

FOR FURTHER INFORMATION CONTACT: Victoria V. Huckabay, Office of Nuclear Material Safety and Safeguards, telephone: 301–415–5183, email: *Victoria.Huckabay@nrc.gov;* or Keith Hoffman, Office of Nuclear Reactor Regulation, telephone: 301–415–1294, email: *Keith.Hoffman@nrc.gov.* Both are staff of the U.S. Nuclear Regulatory Commission, Washington, DC 20555–0001.

SUPPLEMENTARY INFORMATION:

Executive Summary

A. Need for the Regulatory Action

The NRC is proposing to amend its regulations to incorporate by reference the 2019 Edition of the American Society of Mechanical Engineers (ASME) Boiler and Pressure Vessel Code (BPV Code) and the 2020 Edition of the ASME Operation and Maintenance of Nuclear Power Plants, Division 1: OM Code: Section IST (OM Code), for nuclear power plants. The NRC is also proposing to incorporate by reference the 2011 Addenda to ASME NQA–1–2008, Quality Assurance Requirements for Nuclear Facility Applications (ASME NQA–1b–2011), and the 2012 and 2015 Editions of ASME NQA–1, Quality Assurance Requirements for Nuclear Facility Applications.

The ASME periodically revises and updates its codes for nuclear power plants by issuing new editions; this proposed rule is in accordance with the NRC's practice to incorporate those new editions into the NRC's regulations. This proposed rule maintains the safety of nuclear power plants, makes NRC activities more effective and efficient, and allows nuclear power plant licensees and applicants to take advantage of the latest ASME Codes. The ASME is a voluntary consensus standards organization, and the ASME Codes are voluntary consensus standards. The NRC's use of the ASME Codes is consistent with applicable requirements of the National Technology Transfer and Advancement Act (NTTAA). See also Section VIII of this document, ''Voluntary Consensus Standards.''

B. Major Provisions

Major provisions of this proposed rule include the incorporation by reference with conditions of the following ASME Codes into NRC regulations and delineation of NRC requirements for the use of these Codes:

- The 2019 Edition of the BPV Code
- The 2020 Edition of the OM Code
- The 2011 Addenda to ASME NQA–1–2008, ''Quality Assurance Requirements for Nuclear Facility Applications,'' (ASME NQA–1b–2011) and the 2012 and 2015 Editions of ASME NQA–1.

C. Costs and Benefits

The NRC prepared a draft regulatory analysis to determine the expected costs and benefits of this proposed rule. The regulatory analysis identifies costs and benefits in both a quantitative fashion as well as in a qualitative fashion.

The analysis concludes that this proposed rule would result in a net quantitative averted cost to the industry and the NRC. This proposed rule, relative to the regulatory baseline, would result in a net averted cost for industry of $6.26 million based on a 7 percent net present value (NPV) and $6.99 million based on a 3 percent NPV. The proposed rulemaking alternative benefits the NRC by averting costs for reviewing and approving requests to use alternatives to the Codes on a plant-specific basis under § 50.55a(z) of title 10 of the *Code of Federal Regulations* (10 CFR). The NRC net benefit ranges from $0.49 million based on a 7 percent NPV to $0.57 million based on a 3 percent NPV. Qualitative factors that were considered include regulatory stability and predictability, regulatory efficiency, and consistency with the NTTAA. The regulatory analysis shows that the rulemaking is justified because the total quantified benefits of the proposed regulatory action exceed the costs of the proposed action. When the qualitative benefits (including the safety benefit and improvement in knowledge) are considered together with the quantified benefits, the benefits outweigh the identified quantitative and qualitative impacts.

The NRC has had a decades-long practice of approving and/or mandating the use of certain parts of editions and addenda of these ASME Codes in § 50.55a. Continuing this practice in this proposed rule ensures regulatory stability and predictability. This practice also provides consistency across the industry and provides assurance to the industry and the public that the NRC will continue to support the use of the most updated and technically sound techniques developed by the ASME to provide adequate protection to the public. In this regard, the ASME Codes are voluntary consensus standards developed by technical committees composed of mechanical engineers and others who represent the broad and varied interests of their industries, from manufacturers and installers to insurers, inspectors, distributors, regulatory agencies, and end users. The standards have undergone extensive external review before being considered to be incorporated by reference by the NRC. Finally, the NRC's use of the ASME Codes is consistent with the NTTAA, which directs Federal agencies to adopt voluntary consensus standards instead of developing ''government-unique'' (*i.e.,* Federal agency-developed) standards, unless inconsistent with applicable law or otherwise impractical.

For more information, please see the draft regulatory analysis (Accession No. ML20178A448 in the NRC's Agencywide Documents Access and Management System (ADAMS)).

Table of Contents

I. Obtaining Information and Submitting Comments
A. Obtaining Information
B. Submitting Comments
II. Background
III. Discussion
A. ASME BPV Code, Section III
B. ASME BPV Code, Section XI
C. ASME OM Code
IV. Section-by-Section Analysis
V. Generic Aging Lessons Learned Report
VI. Plain Writing
VII. Voluntary Consensus Standards
VIII. Incorporation by Reference—Reasonable Availability to Interested Parties
IX. Environmental Assessment and Final Finding of No Significant Environmental Impact
X. Paperwork Reduction Act Statement
XI. Regulatory Analysis
XII. Backfitting and Issue Finality
XIII. Regulatory Flexibility Certification
XIV. Availability of Documents

I. Obtaining Information and Submitting Comments

A. Obtaining Information

Please refer to Docket ID NRC–2018–0290 when contacting the NRC about the availability of information for this proposed rule. You may obtain information related to this proposed rule by any of the following methods:

- *Federal Rulemaking Website:* Go to *https://www.regulations.gov* and search for Docket ID NRC–2018–0290.
- *NRC's Agencywide Documents Access and Management System (ADAMS):* You may obtain publicly-available documents online in the ADAMS Public Documents collection at *https://www.nrc.gov/reading-rm/adams.html.* To begin the search, select ''ADAMS Public Documents'' and then select ''Begin Web-based ADAMS Search.'' For problems with ADAMS, please contact the NRC's Public

Document Room (PDR) reference staff at 1–800–397–4209, 301–415–4737, or by email to *pdr.resource@nrc.gov.* For the convenience of the reader, instructions about obtaining materials referenced in this document are provided in the ''Availability of Documents'' section.

• *Attention:* The PDR, where you may examine and order copies of public documents, is currently closed. You may submit your request to the PDR via email at *PDR.Resource@nrc.gov* or call 1–800–397–4209 between 8:00 a.m. and 4:00 p.m. (EST), Monday through Friday, except Federal holidays.

• *Attention:* The Technical Library, where you may examine industry codes and standards, is currently closed. You may submit your request to the Technical Library via email at *Library.Resource@nrc.gov* between 8:00 a.m. and 4:00 p.m. (EST), Monday through Friday, except Federal holidays.

B. Submitting Comments

Please include Docket ID NRC–2018–0290 in your comment submission.

The NRC cautions you not to include identifying or contact information that you do not want to be publicly disclosed in your comment submission. The NRC will post all comment submissions at *http://www.regulations.gov* as well as enter the comment submissions into ADAMS. The NRC does not routinely edit comment submissions to remove identifying or contact information.

If you are requesting or aggregating comments from other persons for submission to the NRC, then you should inform those persons not to include identifying or contact information that they do not want to be publicly disclosed in their comment submission. Your request should state that the NRC does not routinely edit comment submissions to remove such information before making the comment submissions available to the public or entering the comment into ADAMS.

II. Background

The American Society of Mechanical Engineers develops and publishes the ASME BPV Code, which contains requirements for the design, construction, and inservice inspection (ISI) of nuclear power plant components, and the ASME Operation and Maintenance of Nuclear Power Plants, Division 1: OM Code: Section IST (OM Code),[1] which contains requirements for inservice testing (IST) of nuclear power plant components. Until 2012, the ASME issued new editions of the ASME BPV Code every 3 years and addenda to the editions annually, except in years when a new edition was issued. Similarly, the ASME periodically published new editions and addenda of the ASME OM Code. Starting in 2012, the ASME decided to issue editions of its BPV and OM Codes (no addenda) every 2 years with the BPV Code to be issued on the odd years (*e.g.,* 2013, 2015, etc.) and the OM Code to be issued on the even years[2] (*e.g.,* 2012, 2014, etc.). The new editions and addenda typically revise provisions of the ASME Codes to broaden their applicability, add specific elements to current provisions, delete specific provisions, and/or clarify them to narrow the applicability of the provision. The revisions to the editions and addenda of the ASME Codes do not significantly change code philosophy or approach.

The NRC's practice is to establish requirements for the design, construction, operation, ISI (examination), and IST of nuclear power plants by approving the use of editions and addenda of the ASME BPV and OM Codes (ASME Codes) in § 50.55a of title 10 of the *Code of Federal Regulations* (10 CFR). The NRC approves or mandates the use of certain parts of editions and addenda of these ASME Codes in § 50.55a through the rulemaking process of ''incorporation by reference.'' Upon incorporation by reference of the ASME Codes into § 50.55a, the provisions of the ASME Codes are legally-binding NRC requirements as delineated in § 50.55a, and subject to the conditions on certain specific ASME Codes' provisions that are set forth in § 50.55a. The editions and addenda of the ASME BPV and OM Codes were last incorporated by reference into the NRC's regulations in a final rule dated May 4, 2020 (85 FR 26540).

The ASME Codes are consensus standards developed by participants, including the NRC and licensees of nuclear power plants, who have broad and varied interests. The ASME's adoption of new editions of, and addenda to, the ASME Codes does not mean that there is unanimity on every provision in the ASME Codes. There may be disagreement among the technical experts, including the NRC's representatives on the ASME Code committees and subcommittees, regarding the acceptability or desirability of a particular code provision included in an ASME-approved Code edition or addenda. If the NRC believes that there is a significant technical or regulatory concern with a provision in an ASME-approved Code edition or addenda being considered for incorporation by reference, then the NRC conditions the use of that provision when it incorporates by reference that ASME Code edition or addenda into its regulations. In some instances, the condition increases the level of safety afforded by the ASME Code provision, or addresses a regulatory issue not considered by the ASME. In other instances, where research data or experience has shown that certain code provisions are unnecessarily conservative, the condition may provide that the code provision need not be complied with in some or all respects. The NRC's conditions are included in § 50.55a, typically in paragraph (b) of that section. In a Staff Requirements Memorandum dated September 10, 1999, (ADAMS Accession No. ML003755050) the Commission indicated that NRC rulemakings adopting (incorporating by reference) a voluntary consensus standard must identify and justify each part of the standard that is not adopted. For this proposed rule, the provisions of the 2019 Edition of Section III, Division 1; and the 2019 Edition of Section XI, Division 1, of the ASME BPV Code; and the 2020 Edition of the ASME OM Code that the NRC is not adopting, or is only partially adopting, are identified in the Discussion, Regulatory Analysis, and Backfitting and Issue Finality sections of this document. The provisions of those specific editions and code cases that are the subject of this proposed rule that the NRC finds to be conditionally acceptable, together with the applicable conditions, are also identified in the Discussion, Regulatory Analysis, and Backfitting and Issue Finality sections of this document.

The ASME Codes are voluntary consensus standards, and the NRC's incorporation by reference of these Codes is consistent with applicable requirements of the NTTAA. Additional discussion on the NRC's compliance with the NTTAA is set forth in Section VIII of this document, ''Voluntary Consensus Standards.''

III. Discussion

The NRC regulations incorporate by reference ASME Codes for nuclear power plants. This proposed rule is the latest in a series of rulemakings to amend the NRC's regulations to

[1] The editions and addenda of the ASME *Code for Operation and Maintenance of Nuclear Power Plants* have had different titles from 2005 to 2017 and are referred to collectively in this rule as the ''OM Code.''

[2] The 2014 Edition of the ASME OM Code was delayed and was designated the 2015 Edition. Similarly, the 2016 Edition of the OM Code was delayed and was designated the 2017 Edition.

incorporate by reference revised and updated ASME Codes for nuclear power plants. This proposed rule is intended to maintain the safety of nuclear power plants and make NRC activities more effective and efficient.

The NRC follows a three-step process to determine acceptability of new provisions in new editions to the Codes and the need for conditions on the uses of these Codes. This process was employed in the review of the Codes that are the subjects of this proposed rule. First, the NRC staff actively participates with other ASME committee members with full involvement in discussions and technical debates in the development of new and revised Codes. This includes a technical justification of each new or revised Code. Second, the NRC's committee representatives discuss the Codes and technical justifications with other cognizant NRC staff to ensure an adequate technical review. Third, the NRC position on each Code is reviewed and approved by NRC management as part of this proposed rule amending § 50.55a to incorporate by reference new editions of the ASME Codes and conditions on their use. This regulatory process, when considered together with the ASME's own process for developing and approving the ASME Codes, assures that the NRC approves for use only those new and revised Code edition and addenda, with conditions as necessary, that provide reasonable assurance of adequate protection to the public health and safety, and that do not have significant adverse impacts on the environment.

The NRC reviewed changes to the Codes in the editions identified in this proposed rule. The NRC concluded, in accordance with the process for review of changes to the Codes, that these editions of the Codes, are technically adequate, consistent with current NRC regulations, and approved for use with the specified conditions upon the conclusion of the rulemaking process.

The NRC is proposing to amend its regulations to incorporate by reference:

- The 2019 Edition to the ASME BPV Code, Section III, Division 1 and Section XI, Division 1, with conditions on its use.
- The 2020 Edition to Division 1 of the ASME OM Code, with conditions on its use.
- The 2011 Addenda to ASME NQA–1–2008, Quality Assurance Requirements for Nuclear Facility Applications (ASME NQA–1b–2011) and the 2012 and 2015 Editions of ASME NQA–1, with conditions on its use.

The current regulations in § 50.55a(a)(1)(i) incorporate by reference ASME BPV Code, Section III, 1963 Edition through the 1970 Winter Addenda; and the 1971 Edition (Division 1) through the 2017 Edition (Division 1), subject to the conditions identified in current § 50.55a(b)(1)(i) through (xii). This proposed rule would revise § 50.55a(a)(1)(i) to incorporate by reference the 2019 Edition (Division 1) of the ASME BPV Code, Section III.

The current regulations in § 50.55a(a)(1)(ii) incorporate by reference ASME BPV Code, Section XI, 1970 Edition through the 1976 Winter Addenda; and the 1977 Edition (Division 1) through the 2017 Edition (Division 1), subject to the conditions identified in current § 50.55a(b)(2)(i) through (xlii). This proposed rule would revise § 50.55a(a)(1)(ii) to incorporate by reference the 2019 Edition (Division 1) of the ASME BPV Code, Section XI. It would also clarify the wording and add, remove, or revise some of the conditions as explained in this proposed rule.

The current regulations in § 50.55a(a)(1)(iv) incorporate by reference ASME OM Code, 1995 Edition through the 2017 Edition, subject to the conditions currently identified in § 50.55a(b)(3)(i) through (xi). This proposed rule would revise § 50.55a(a)(1)(iv) to incorporate by reference the 2020 Edition of Division 1 of the ASME OM Code. As explained in Section III.B of this document, this proposed rule would revise § 50.55a(a)(1)(iv) to remove the incorporation by reference of the 2011 Addenda of the ASME OM Code as well as the 2015 Edition of the ASME OM Code.

The current regulations in § 50.55a(a)(1)(v) incorporate by reference ASME NQA–1, Quality Assurance Requirements for Nuclear Facility Applications, subject to conditions identified in § 50.55a(b)(1)(iv) and (b)(2)(x). This proposed rule would revise § 50.55a(a)(1)(v)(B) to incorporate by reference the 2011 Addenda to ASME NQA–1–2008 (ASME NQA–1b–2011) and the 2012 and 2015 Editions of ASME NQA–1.

In the introductory discussion of its Codes, ASME specifies that errata to those Codes may be posted on the ASME website under the Committee Pages to provide corrections to incorrectly published items, or to correct typographical or grammatical errors in those Codes. Users of the ASME BPV Code and ASME OM Code should be aware of errata when implementing the specific provisions of those Codes. Applicants and licensees should monitor errata to determine when they might need to submit a request for an alternative under § 50.55a(z) to implement provisions specified in an errata to their ASME Code of record. Each of the proposed NRC conditions and the reasons for each are discussed in the following sections of this document. The discussions are organized under the applicable ASME Code and Section.

The NRC prepared an unofficial redline strikeout version of the proposed changes to regulatory text which is intended to help the reader identify the proposed changes. The unofficial redline strikeout version of the proposed rule is publicly available and is listed in the ''Availability of Documents'' section.

A. ASME BPV Code, Section III

Section 50.55a(a)(1)(i)(E) Rules for Construction of Nuclear Facility Components—Division 1

The NRC proposes to revise § 50.55a(a)(1)(i)(E) to incorporate by reference the 2019 Edition of the ASME BPV Code, Section III, including Subsection NCA and Division 1 Subsections NB through NG and Appendices. As stated in § 50.55a(a)(1)(i), the Nonmandatory Appendices are excluded and not incorporated by reference. The Mandatory Appendices are incorporated by reference because they include information necessary for Division 1. However, the Mandatory Appendices also include material that pertains to other Divisions that have not been reviewed and approved by the NRC. Although this information is included in the sections and appendices being incorporated by reference, the NRC notes that the use of Divisions other than Division 1 has not been approved, nor are they required by NRC regulations and, therefore, such information is not relevant to current applicants and licensees. The NRC is not taking a position on the non-Division 1 information in the appendices and is including it in the incorporation by reference only for convenience. Therefore, this proposed rule would revise the introductory text to § 50.55a(a)(1)(i)(E) to reference the 2019 Edition of the ASME BPV Code, Section III, including Subsection NCA and Division 1 Subsections NB through NG and Appendices.

Section 50.55a(b)(1) Conditions on ASME BPV Code Section III

The NRC proposes to revise the definition of Section III in § 50.55a(b)(1) to include the latest edition of the

ASME BPV Code, Section III incorporated by reference in paragraph (a)(1)(i).

Section 50.55a(b)(1)(ii) Section III Condition: Weld Leg Dimensions

The NRC proposes to revise § 50.55a(b)(1)(ii) to extend the applicability of the condition through the latest edition of the ASME BPV Code, Section III incorporated by reference in paragraph (a)(1)(i). The 2019 Edition of Section III was not modified in a way that would make it possible for the NRC to remove this condition. Therefore, the NRC is proposing to revise this condition to apply to the latest edition incorporated by reference.

Section 50.55a(b)(1)(iii) Section III Condition: Seismic Design of Piping

The NRC proposes to revise § 50.55a(b)(1)(iii) to extend the applicability of the condition through the latest edition of the ASME BPV Code, Section III incorporated by reference in paragraph (a)(1)(i). The 2019 Edition of Section III was not modified in a way that would make it possible for the NRC to remove this condition. Therefore, the NRC is proposing to revise this condition to apply to the latest edition incorporated by reference.

Section 50.55a(b)(1)(iv) Section III Condition: Quality Assurance

The NRC is proposing to revise this condition to allow the use of the editions of NQA–1 that are both incorporated by reference in paragraph (a)(1)(v) of § 50.55a and specified in either NCA–4000 or NCA–7000 of the 1989 or later edition of Section III. This will allow applicants and licensees to use the 2011 Addenda to ASME NQA–1–2008, Quality Assurance Requirements for Nuclear Facility Applications (ASME NQA–1b–2011), and the 2012 and 2015 Edition of NQA–1 when using the 2019 and later Editions of Section III, which this rule is also incorporating by reference.

Section 50.55a(b)(1)(vii) Section III Condition: Capacity Certification and Demonstration of Function of Incompressible-Fluid Pressure-Relief Valves

The NRC proposes to revise § 50.55a(b)(1)(vii) to extend the applicability of the condition through the latest edition of the ASME BPV Code, Section III incorporated by reference in paragraph (a)(1)(i). The 2019 Edition of Section III was not modified in a way that would make it possible for the NRC to remove this condition. Therefore, the NRC is proposing to revise this condition to apply to the latest edition incorporated by reference.

Section 50.55a(b)(1)(x) Section III Condition: Visual Examination of Bolts, Studs, and Nuts

The NRC proposes to revise § 50.55a(b)(1)(x) to extend the applicability of the condition through the latest edition of the ASME BPV Code, Section III incorporated by reference in paragraph (a)(1)(i). The 2019 Edition of Section III was not modified in a way that would make it possible for the NRC to remove this condition. Therefore, the NRC is proposing to revise this condition to apply to the latest edition incorporated by reference.

Section 50.55a(b)(1)(xiii) Section III Condition: Preservice Inspection of Steam Generator Tubes

The NRC is proposing to add a new condition § 50.55a(b)(1)(xiii) to condition the provisions of NB–5283 in the 2019 Edition of Section III, which exempted steam generator tubing from preservice examinations. The condition is in two provisions as follows:

Section 50.55a(b)(1)(xiii)(A) Section III Condition: Preservice Inspection of Steam Generator Tubes, First Provision

The NRC is proposing to add a condition to require that a full-length preservice examination of 100 percent of the steam generator tubing in each newly installed steam generator be performed prior to plant startup. Preservice examinations provide a baseline for future required inservice examinations and provides assurance of its structural integrity and ability to perform its intended function. The 2019 Edition does not require these preservice examinations to be performed. Therefore, the NRC is adding § 50.55a(b)(1)(xiii)(A) to condition the provisions of NB–5283 in the 2019 Edition of Section III to require that preservice examination of steam generator tubing shall be performed, in order to ensure that the steam generator tubing which is part of the reactor coolant pressure boundary has an adequate baseline examination for future inservice examinations and ensures the tubing's structural integrity to perform its intended function.

Section 50.55a(b)(1)(xiii)(B) Section III Condition: Preservice Inspection of Steam Generator Tubes, Second Provision

The provisions of NB–5360 in the 2019 Edition of Section III removed the requirements for eddy current preservice examination of installed steam generator tubing and the criteria for evaluating flaws found during the preservice examination. A preservice examination is important because it ensures that the steam generator tubes, which are part of the reactor coolant pressure boundary, are acceptable for initial operation. In addition, preservice examination provides the baseline condition of the tubes, which is essential in assessing the nature of indications found in the tubes during subsequent inservice examinations. These inspections must be performed with the objective of finding and characterizing the types of preservice flaws that may be present in the tubes and flaws that may occur during operation. Therefore, the NRC is adding § 50.55a(b)(1)(xiii)(B) to condition the provisions of NB–5360 in the 2019 Edition of Section III, to require that flaws revealed during preservice examination of steam generator tubing shall be evaluated using the criteria in the design specifications.

B. ASME BPV Code, Section XI

Section 50.55a(a)(1)(ii) ASME Boiler and Pressure Vessel Code, Section XI

The NRC proposes to remove and reserve § 50.55a(a)(1)(ii)(A), remove § 50.55a(a)(1)(ii)(B)(*5*) through (*7*), and remove and reserve § 50.55a(a)(1)(ii)(C)(*1*) through (*32*) and (*37*) through (*40*) because they incorporate by reference older editions and addenda of Section XI prior to 2001 Edition which are no longer in use. As a result of removing those older editions that are no longer in use, the NRC proposes to amend regulations in § 50.55a(b)(2)(viii), (ix), (xii), (xiv), and (xv), (b)(2)(xviii)(A), and (b)(2)(xix), and (b)(2)(xx)(A) to remove references to these older editions and addenda.

The NRC proposes to amend the regulations in § 50.55a(a)(1)(ii)(C) to incorporate by reference the 2019 Edition (Division 1) of the ASME BPV Code, Section XI. The current regulations in § 50.55a(a)(1)(ii)(C) incorporate by reference ASME BPV Code, Section XI, the 1977 Edition (Division 1) through the 2017 Edition (Division 1), subject to the conditions identified in current § 50.55a(b)(2)(i) through (xlii). The proposed amendment would revise the introductory text to § 50.55a(a)(1)(ii)(C) to reference the 2019 Edition (Division 1) of the ASME BPV Code, Section XI.

Section 50.55a(b)(2) Conditions on ASME BPV Code Section XI

The NRC proposes to revise the definition of Section XI in § 50.55a(b)(2) to include the latest edition of the ASME BPV Code, Section XI incorporated by reference in paragraph (a)(1)(ii).

Section 50.55a(b)(2)(viii) Section XI Condition: Concrete Containment Examinations

As stated above, the NRC proposes to amend the regulations in § 50.55a(b)(2)(viii) to remove references to Section XI editions and addenda prior to the 2001 Edition. With the removal of these earlier editions the NRC also proposes to delete paragraphs (b)(2)(viii)(A) through (D) as these conditions apply to these earlier editions.

Section 50.55a(b)(2)(ix) Section XI Condition: Metal Containment Examinations

As stated above, the NRC proposes to amend the regulations in § 50.55a(b)(2)(ix) to remove references to Section XI editions and addenda prior to the 2001 Edition. With the removal of these earlier editions the NRC also proposes to delete paragraphs (b)(2)(ix)(C) through (E) as these conditions apply to these earlier editions.

Section 50.55a(b)(2)(x) Section XI Condition: Quality Assurance

The NRC proposes to revise this condition to extend it to the versions of NQA–1 referenced in the 2019 Edition of the ASME BPV Code, Section XI, Table IWA 1600–1, ''Referenced Standards and Specifications,'' which this proposed rule would also incorporate by reference.

The NRC is proposing to revise this condition to allow the use of the editions of NQA–1 that are both incorporated by reference in paragraph (a)(1)(v) of § 50.55a and specified in Table IWA 1600–1 of the 1989 or later Editions of Section XI. In the 2019 Edition of ASME BPV Code, Section XI, Table IWA 1600–1 was updated to specify that licensees use the 1994 Edition or 2008 Edition through 2015 Editions of NQA–1 when using the 2019 Edition of Section XI. These revisions will allow licensees to use the 2011 Addenda to ASME NQA–1–2008, and the 2012 and 2015 Edition of NQA–1 when using the 2019 and later Editions of Section XI, which this rule is also incorporating by reference.

The NRC also proposes to revise this condition to remove the reference to IWA–1400 because it does not reference editions of NQA–1. The removal of reference to IWA–1400 clarifies the text of the condition because Table IWA 1600–1 specifies the editions of NQA–1 to be used, while IWA–1400 simply refers to using NQA–1 generally, without specifying any particular edition.

Section 50.55a(b)(2)(xviii)(D) NDE Personnel Certification: Fourth Provision

The NRC proposes to amend the condition found in § 50.55a(b)(2)(xviii) to address the removal of ASME BPV Code, Section XI, 2011 Addenda from § 50.55a(a)(1)(ii).

In addition, research performed at the Pacific Northwest National Laboratory (PNNL) has shown that laboratory practice can be effective in developing the skill to find flaws, and on-the-job training is effective at developing the ability to perform examinations in a nuclear reactor environment. Based on the research described in Technical Letter Report PNNL–29761 (ADAMS Accession No. ML20079E343), the 250 experience hours for a Level I certification can be reduced to 175 hours, with 125 experience hours and 50 hours of laboratory practice, and the experience hours for Level II Certification can be reduced to 720 hours, with 400 experience hours and 320 hours of laboratory practice, without significantly reducing the capabilities of the examiners to navigate in a nuclear reactor environment. The NRC is therefore adding an option to § 50.55a(b)(2)(xviii) to allow these requirements as an alternative to Appendix VII, Table VII–4110–1 and Appendix VIII, Subarticle VIII–2200 in the 2010 Edition.

Section 50.55a(b)(2)(xx)(C) Section XI Condition: System Leakage Tests: Third Provision

The NRC proposes to amend the regulations in § 50.55a(b)(2)(xx)(C) to extend the applicability of the condition through the latest edition of the ASME BPV Code, Section XI incorporated by reference in paragraph (a)(1)(ii) of this section. The NRC also proposes to amend § 50.55a(b)(2)(xx)(C) to reflect that IWB–5210(c) was deleted from the 2019 Edition because it contained verbiage that was redundant to the language in IWA–5213(b)(2) and IWB–5221(d).

Section 50.55a(b)(2)(xxi)(B) Table IWB–2500–1 Examination

The NRC proposes to amend the regulations in § 50.55a(b)(2)(xxi)(B) to extend the applicability of the condition through the latest edition of the ASME BPV Code, Section XI incorporated by reference in paragraph (a)(1)(ii) of this section.

Section 50.55a(b)(2)(xxv)(B) Mitigation of Defects by Modification: Second Provision

The NRC proposes to amend the regulations in § 50.55a(b)(2)(xxv)(B) to extend the applicability of the condition through the latest edition of the ASME BPV Code, Section XI incorporated by reference in paragraph (a)(1)(ii) of this section. The NRC also proposes to amend the conditions found in § 50.55a(b)(2)(xxv)(B) by revising requirements associated with: (1) Conducting wall thickness examinations at alternative locations; and (2) follow on examination requirements for external corrosion of buried piping.

Paragraph (b)(2)(xxv)(B)(*2*) currently requires the licensee to establish a loss of material rate by conducting wall thickness examinations at the location of the defect. The condition also establishes the timing of the examinations (*i.e.,* two prior consecutive or nonconsecutive refueling outage cycles in the 10 year period prior to installation of the modification). The NRC proposes to provide an alternative by allowing loss of material rates to be measured at an alternative location with similar corrosion conditions, similar flow characteristics, and the same piping configuration (*e.g.,* straight run of pipe, elbow, tee). The NRC had already accepted these characteristics as those necessary to establish equivalency for internal corrosion on buried piping configurations. The NRC recognizes that many licensees are conducting periodic wall thickness examinations of piping systems as part of asset management plans. Allowing an alternative equivalent location to be used to obtain loss of material rates provides flexibility and reduces unnecessary burden. In addition, the NRC proposes to delete the timing of the examination requirements because the 2 times multiplier required by the condition provides a conservative bias for measured loss of material rates.

Paragraph (b)(2)(xxv)(B)(*3*) currently requires the licensee to conduct wall thickness examinations on a refueling outage interval until projected flaw growth rates have been validated. After validation of the flaw growth rate, the modification would be examined at half its expected life or, if the modification has an expected life greater than 19 years, once per interval. The NRC proposes to delete the refueling outage interval examinations and only require the examination to occur at half the modification's expected life or, if the modification has an expected life greater

than 19 years, once per interval. The NRC has concluded that the 2 times multiplier for known loss of material rates or 4 times multiplier for estimated loss of material rates provides sufficient conservatism to allow a followup examination to occur at half the modification's expected life or, if the modification has an expected life greater than 19 years, once per interval.

The changes proposed in paragraph (b)(2)(xxv)(B)(*3*)(*i*) are editorial. The NRC proposes to delete the term ''through wall'' from the clarification of extent of degradation differences. The NRC recognizes that it would be unlikely that through wall leakage would be occurring in two locations (*i.e.,* modification location, different examination location). The term ''percent wall loss plus or minus 25 percent'' is sufficient to capture through wall, if it should occur at the different examination location as well as any other level of wall loss.

Paragraph (b)(2)(xxv)(B)(*3*)(*ii*) currently requires licensees to examine a buried pipe modification location where loss of material has occurred due to external corrosion at half its expected life or 10 years, whichever is sooner. The NRC proposes to revise this condition to include a provision that would allow an extension of the required inspection to any time in the first full 10-year inspection interval after installation if the modification is recoated prior to backfill following modification. This could mean that the modification might not be inspected until as much as 19 years after installation. The NRC and industry recognize that effective coatings can isolate the base material from the environment and prevent further degradation. If coating holidays (*e.g.,* voids in coating) were to go undetected, only localized loss of material would occur versus widespread general corrosion. The NRC has reached this conclusion for two reasons: (1) Effective coatings ensure isolation of the modification site from the environment such that only the areas with coating holidays would be affected by the environment; and (2) because pitting corrosion that might occur due to holidays would not affect the intended function of the piping (*i.e.,* to deliver flow), extension of the examination timing will not challenge the intended function of the piping system.

Section 50.55a(b)(2)(xxvi), Section XI Condition: Pressure Testing of Class 1, 2, and 3 Mechanical Joints

The NRC proposes to amend § 50.55a(b)(2)(xxvi) to to remove references to Section XI pressure test and VT–2 examination. The NRC proposes to relax the requirement to perform an ASME Section XI pressure test in accordance with IWA–5211(a) and VT–2 examination of mechanical joints disassembled and reassembled during the course of repair/replacement activities. This condition was established in the final rule dated October 1, 2004 (69 FR 58804) to supplement the test provisions in IWA–4540 of the 2001 Edition and the 2002 and 2003 Addenda of Section XI of the ASME BPV Code to require that Class 1, 2, and 3 mechanical joints be pressure tested in accordance with IWA–4540(c) of the 1998 Edition of Section XI. Over the years and in several rulemakings commenters have stated this condition was not required because licensee post-maintenance test programs in accordance with appendix B to 10 CFR part 50, ''Quality Assurance Criteria for Nuclear Power Plants and Fuel Reprocessing Plants,'' specify requirements for leak testing mechanical connections following reassembly.

The final rule issued on May 4, 2020 (85 FR 26540) revised this condition to clarify examiner and pressure test code requirements. But this change caused confusion, because the industry interpreted the rule to mean that some exemptions from pressure testing allowed by the code were no longer allowable and that certain pressure testings would now be required, whereas they were not required prior to this change. Following the publication of the final rule, the NRC held a public meeting on June 4, 2020, to discuss this condition (ADAMS Accession No. ML20163A609). The industry asked the NRC to reevaluate the interpretation and the need for the condition. The NRC performed a qualitative risk analysis to judge the safety significance of performing the Section XI pressure test and VT–2 examinations. The NRC looked at several risk scenarios and leveraged the principles of risk-informed decision-making with technical work completed through closure of Generic Safety Issue 29 (GSI–29): Bolting Degradation of Failure in Nuclear Power Plants (ADAMS Accession No. ML031430208) and current operational experience; the NRC concluded that the risk of failure of mechanical joints in the absence of pressure testing and VT–2 examination after repair/replacement activities is very low. The NRC found that the risk analyses suggest that the absence of the pressure test after repair/replacement activities imposes a minimal safety concern when taking into account the additional measures conducted by the industry to ensure leak tightness. The NRC concluded that failure of a mechanical joint in the absence of a pressure test and VT–2 exam is unlikely, and the corresponding condition for Section XI pressure testing after repair/replacement activities is not needed for safety. The NRC presented the results of this risk analysis at a public meeting held June 25, 2020 (ADAMS Accession No. ML20189A286).

In performing the risk determination, the NRC considered several principles of risk-informed decision-making. While not relying fully on these concepts, the NRC determined that the following additional measures help reduce the uncertainty associated with the qualitative risk assessment discussed above. With respect to performance monitoring, the NRC considered: (1) Leak tests conducted as part of the licensee quality assurance programs, (2) the twice daily walkdowns in all accessible areas by Operations staff, including inspecting for leaks as part of plant rounds, (3) containment monitoring for identified and unidentified leakage, and (4) pressure testing of reactor coolant loop performed after each refueling outage. With respect to defense-in-depth, the NRC considered that many systems, including the emergency core cooling system, are in place to maintain core cooling if a primary system has a flange failure, and that many Code systems have redundant trains. With respect to safety margins, the NRC considered that leak-before-break analysis of nuclear power plant primary systems have illustrated that significant safety margins exist for leaking joints, and the results of studies conducted during closure of GSI–29 showed that a joint will leak with a sufficient rate to be detected and mitigated by the licensees before joint rupture occurs.

Therefore, the NRC is proposing to amend § 50.55a(b)(2)(xxvi) to require a licensee defined leak test to demonstrate the leak tightness of Class 1, 2, and 3 mechanical joints. The proposed change would require that the owner establish the type of leak test, test medium, test pressure, and acceptance criteria that would demonstrate the joint's leak tightness. Because the condition would no longer require an ASME Code pressure test, the ASME Code NDE examiner qualification requirements would no longer apply. Therefore the NRC is also removing the requirement for the NDE examiners to meet the requirements of the licensee's current ISI code of record. The licensee must also specifiy the qualifications of the person performing the leak test.

Requiring the licensee defined leak test ensures the tests are done in accordance with the licensee's appendix B program as described by commenters in the past. The licensee defined test is consistent with recommendations of the ASME Post Construction Committee (PCC), which develops and maintains standards addressing common issues and technologies related to post construction activities. The PCC works with other consensus committees on the development of separate, product-specific, codes and standards that address issues encountered after initial construction for equipment and piping covered by Pressure Technology Codes and Standards. The PCC-developed standards generally follow ''Recognized and Generally Accepted Good Engineering Practice.'' The PCC has developed PCC–1, ''Guidelines for Pressure Boundary Bolted Flange Joint Assembly,'' for maintaining flanged joints, which has been referenced in American Petroleum Institute and National Board of Boiler and Pressure Vessel Inspectors Inspection Code standards. PCC–1 requires an owner defined leak test, which is generally accepted as a good engineering practice.

This licensee defined leak test must be performed on mechanical joints in Class 1, 2, and 3 piping and components greater than NPS–1 that are disassembled and reassembled during the performance of a Section XI repair or replacement activity requiring documentation on a Form NIS–2. The licensee defined leak test should be of sufficient rigor to ensure leak tightness under operational conditions of mechanical joints affected by repair/replacement activities. The licensee defined leak test will achieve what the imposition of the original condition in the 2004 rulemaking sought to achieve, which was leak tightness of mechanical joints impacted by repair/replacement activities. The NRC will continue to monitor operating experience related to mechanical joints to determine if this condition merits modification in the future.

Section 50.55a(b)(2)(xxix), Section XI Condition: Nonmandatory Appendix R

The NRC proposes to amend § 50.55a(b)(2)(xxix) to allow the use of Supplement 2 of Nonmandatory Appendix R of Section XI in the 2017 and 2019 Editions without submittal of an alternative in accordance with § 50.55a(z). Currently § 50.55a(b)(2)(xxix) requires licensees who desire to implement a Risk-Informed Inservice Inspection (RI–ISI) program in accordance with Appendix R to obtain prior authorization of an alternative in accordance with § 50.55a(z). The NRC has reviewed the latest revisions to Appendix R and have found that Supplement 2 of Appendix R in the 2017 and 2019 Editions of ASME Section XI would ensure that future RI–ISI programs continue to comply with RG 1.178, ''An Approach for Plant-Specific Risk-Informed Decisionmaking for Inservice Inspection of Piping,'' (ADAMS Accession No. ML032510128), RG 1.200, ''An Approach for Determining the Technical Adequacy of Probabilistic Risk Assessment Results for Risk-Informed Activities,'' (ADAMS Accession No. ML090410014), and NRC Standard Review Plan Chapter 3.9.8, ''Review of Risk-Informed Inservice Inspection of Piping,'' (ADAMS Accession No. ML032510135). Therefore, the NRC is amending § 50.55a(b)(2)(xxix) to allow RI–ISI programs in accordance with Supplement 2 of Appendix R in ASME Section XI editions 2017 and later to be used without submittal of an alternative in accordance with § 50.55a(z). The submittal of an alternative is still required for RI–ISI programs in accordance with Supplement 1 of Appendix R or to use Supplement 2 of Section XI editions prior to 2017.

Section 50.55a(b)(2)(xxxii) Section XI Condition: Summary Report Submittal

The NRC proposes to amend the condition in § 50.55a(b)(2)(xxxii) to relax the timeframe for submittal of Summary Reports (pre-2015 Edition) or Owner Activity Reports (2015 Edition and later) for inservice examinations and repair replacement activities. Through the 2017 Edition of ASME BPV Code, Section XI, owners were required to prepare Summary Reports or Owner Activity Reports of preservice examination, inservice examinations and repair replacement activities within 90 calendar days of the completion of each refueling outage. In the 2019 Edition of Section XI this timeframe was extended to 120 days. The NRC has no objections to allowing licensees up to 120 days to submit the reports and sees no reason to require earlier submittal for users of previous editions. Therefore, the NRC proposes to relax the requirement for all licensees.

Section 50.55a(b)(2)(xxxvi) Section XI Condition: Fracture Toughness of Irradiated Materials

The NRC proposes to amend the regulations in § 50.55a(b)(2)(xxxvi) to extend the applicability of the condition through the latest edition of the ASME BPV Code, Section XI incorporated by reference in paragraph (a)(1)(ii) of this section.

Section 50.55a(b)(2)(xxxix) Section XI Condition: Defect Removal

The NRC proposes to amend the regulations in § 50.55a(b)(2)(xxxix) to extend the applicability of the condition through the latest edition of the ASME BPV Code, Section XI incorporated by reference in paragraph (a)(1)(ii) of this section.

Section 50.55a(b)(2)(xl) Section XI Condition: Prohibitions on Use of IWB–3510.4(b)

The NRC proposes to amend the regulations in § 50.55a(b)(2)(xl) to extend the applicability of the condition through the latest edition of the ASME BPV Code, Section XI incorporated by reference in paragraph (a)(1)(ii) of this section. The NRC also proposes to add prohibitions on the use of ASME BPV Code, Section XI, IWC–3510.5(b)(4), IWC–3510.5(b)(5), and Tables A–4200–1 and G–2110–1. This proposed condition does not change the current requirements. Rather, it maintains existing testing requirements that licensees/applicants may use to show that the ASME Section XI toughness curve is applicable to high-strength ferritic steels.

ASME has revised certain provisions to extend methods for characterizing fracture tougness of high-strength ferritic steels and associated flaw acceptance standards that the NRC prohibited in a previous rulemaking (85 FR 26540: May 4, 2020) to IWC–3510.5 and Tables A–4200–1 and G–2110–1 (for SA–533 Type B Class 2). The NRC proposes to extend the application of this condition to these revised provisions for the same reasons as outlined in the previous rulemaking. In addition to amending the text of § 50.55a(b)(2)(xl), the NRC proposes to change the heading of the paragraph to read: ''*Section 50.55a(b)(2)(xl) Section XI Condition: Prohibitions and Restrictions Related to Fracture Toughness of Certain High-Strength Ferritic Steels.*''

Section 50.55a(b)(2)(xliii) Section XI Condition: Regulatory Submittal Requirements

The NRC proposes to add § 50.55a(b)(2)(xliii) to require licensees to submit certain analyses for NRC review. In the 2019 Edition of the Code, ASME elected to remove a number of submittal requirements related to flaw evaluation. The subparagraphs where these requirements were removed included IWA–3100(b), IWB–3410.2(d), IWB–3610(e), IWB–3640, IWC–3640, IWD–3640, IWB–3720(c), IWB–3730(c), G–2216, G–2510, G–2520, A–4200(c),

A–4400(b), and G–2110(a). The NRC reviewed each of these subparagraphs and determined that three of these removed submittal requirements were necessary to allow the NRC to review plant safety with respect to violation of pressure-temperature limits, ductile-to-brittle transition behavior of ferritic steels, and the effects of radiation embrittlement. Therefore, the proposed condition would simply retain the requirement from previous editions of ASME Section XI.

The IWB–3720 addresses the scenario where plant pressure-temperature limits are violated due to an unanticipated operating event. Pressure-temperature limits provide important operational limitations that protect against brittle fracture of the Reactor Coolant System. In the case that such limits are exceeded, IWB–3720(a) directs the plant owner to perform an analysis that determines the effect of the out-of-limit condition on the structural integrity of the Reactor Coolant System. Given the important safety implications of violating pressure-temperature limits, the NRC determined that licensees shall submit analyses performed under IWB–3720(a) for NRC review.

Nonmandatory Appendix A, subparagraph A–4200(c) and Nonmandatory Appendix G, subparagraph G–2110(c) allow owners to use a reference temperature based upon T_0 (called RT_{T0}) instead of RT_{NDT}. RT_{NDT} is a long-accepted method for accounting for ductile-to-brittle transition behavior of ferritic steels, including the effects of radiation embrittlement. T_0 has not been extensively used in the nuclear power industry, at this time. Determination of plant-specific T_0 values requires careful consideration of the operating characteristics of the plant. Given the safety significance of the reactor pressure vessel and the relative lack of experience with using T_0, the NRC determined that licensees shall submit analyses to determine T_0 for NRC review.

C. ASME OM Code

Section 50.55a(a)(1)(iv), ASME Operation and Maintenance Code

The NRC proposes to amend the regulations in § 50.55a(a)(1)(iv)(B) to incorporate by reference the 2020 Edition of the American Society of Mechanical Engineers Operation and Maintenance of Nuclear Power Plants, Division 1: OM Code: Section IST, for nuclear power plants.

The current NRC regulations in § 50.55a(a)(1)(iv)(B)(*2*) incorporate by reference the 2011 Addenda of the ASME OM Code into § 50.55a. The NRC is streamlining § 50.55a wherever possible to provide clearer IST regulatory requirements for nuclear power plant licensees and applicants. As part of this effort, the NRC has determined that the incorporation by reference of the 2011 Addenda of the ASME OM Code into § 50.55a is not necessary. There are no licensees or applicants currently implementing the 2011 Addenda of the ASME OM Code. Further, the NRC regulations would have required updating licensees or applicants to implement the 2012 Edition of the ASME OM Code (rather than the 2011 Addenda) because it is a later edition and was incorporated by reference into § 50.55a on the same date. Therefore, the NRC proposes to remove the incorporation by reference of the 2011 Addenda of the ASME OM Code from § 50.55a(a)(1)(iv)(B)(*2*), which would allow the NRC to remove the condition on the use of the 2011 Addenda specified in § 50.55a(b)(3)(xi) as well as the reference to the 2011 Addenda in § 50.55a(b)(3)(ix). For similar reasons, the NRC proposes to remove the incorporation by reference of the 2015 Edition of the ASME OM Code from § 50.55a(a)(1)(iv)(C)(*2*) because the 2017 Edition of the ASME OM Code was incorporated by reference into § 50.55a on the same date as the 2015 Edition. In the case of both the 2011 Addenda and 2015 Edition, the NRC incorporated these editions of the Code on the same date as a later Edition, and as a result neither was ever eligible for use by applicants or updating licensees; if similar circumstances occur in the future, the NRC will consider skipping an edition rather than incorporating a revision that would not be useable for applicants or updating licensees.

Section 50.55a(b)(3) Conditions on ASME OM Code

The NRC proposes to simplify § 50.55a(b)(3) to be consistent with the proposal to remove specific editions or addenda from § 50.55a(a)(1)(iv) as previously mentioned and further discussed in the following.

Section 50.55a(b)(3)(iii) OM Condition: New Reactors

The NRC proposes to simplify § 50.55a(b)(3)(iii) by revising the applicability date to read ''April 17, 2018'' instead of ''the date 12 months after April 17, 2017.'' This editorial correction does not change the applicability date of the condition.

Section 50.55a(b)(3)(iv) OM Condition: Check Valves (Appendix II)

The NRC proposes to replace the reference to the 2015 Edition of the ASME OM Code with the 2012 Edition of the ASME OM Code in this paragraph because the NRC proposes to amend § 50.55a(a)(1)(iv)(C)(*2*) to remove the incorporation by reference of the 2015 Edition of the ASME OM Code. The 2012 Edition would become the latest edition that this condition applies to because changes were made to the 2017 and later Editions that allowed the NRC not to extend the condition to the newer Editions.

Section 50.55a(b)(3)(vii) OM Condition: Subsection ISTB

The NRC proposes to remove this condition on the use of Subsection ISTB, ''Inservice Testing of Pumps in Light-Water Reactor Nuclear Power Plants—Pre-2000 Plants,'' in the 2011 Addenda of the ASME OM Code from § 50.55a. The condition would become unnecessary because the NRC also proposes to amend § 50.55a(a)(1)(iv)(B)(*2*) to remove the incorporation by reference of the 2011 Addenda of the ASME OM Code. The NRC proposes to reserve this paragraph for future use.

Section 50.55a(b)(3)(viii) OM Condition: Subsection ISTE

The current NRC regulations in § 50.55a(b)(3)(viii) specify that licensees may not implement the risk-informed approach for IST of pumps and valves specified in Subsection ISTE, ''Risk-Informed Inservice Testing of Components in Light-Water Reactor Nuclear Power Plants,'' in the ASME OM Code, 2009 Edition through the latest edition and addenda of the ASME OM Code incorporated by reference in § 50.55a(a)(1)(iv), without first obtaining NRC authorization to use Subsection ISTE as an alternative to the applicable IST requirements in the ASME OM Code pursuant to § 50.55a(z). In its review of Subsection ISTE, ''Risk-Informed Inservice Testing of Components in Water-Cooled Nuclear Power Plants,'' in the 2020 Edition of the ASME OM Code, the NRC has found that the ASME has revised the subsection to be acceptable in the 2020 Edition of the ASME OM Code. Therefore, the NRC proposes to not to extend this condition to the 2020 Edition of the ASME OM Code. The NRC notes that a licensee will be expected to address performance issues with pumps and valves regardless of the risk ranking of the pumps and valves during the extent of condition review as

part of the corrective action program to avoid common cause safety concerns at the applicable nuclear power plant.

Section 50.55a(b)(3)(ix), OM Condition: Subsection ISTF

The NRC proposes to amend the condition on the use of Subsection ISTF in § 50.55a(b)(3)(ix) by removing the references to the 2011 Addenda and the 2015 Edition of the ASME OM Code. The references are unnecessary because the NRC also proposes to amend § 50.55a(a)(1)(iv)(B)(*2*) to remove the incorporation by reference of the 2011 Addenda and amend § 50.55a(a)(1)(iv)(C)(*2*) to remove the incorporation by reference of the 2015 Edition of the ASME OM Code. The 2012 Edition would become the latest edition that this condition applies to because changes were made to the 2017 and later Editions that allowed the NRC not to extend the condition to the newer Editions.

Section 50.55a(b)(3)(xi) OM Condition: Valve Position Indication

The NRC proposes to amend § 50.55a(b)(3)(xi) for the implementation of paragraph ISTC–3700, ''Position Verification Testing,'' in the ASME OM Code to clarify the condition by removing the reference to addenda of the ASME OM Code. ASME stopped publishing addenda after the 2011 Addenda to the 2009 Edition, and the condition applies only to the 2012 or later editions.

In addition, the NRC proposes to amend § 50.55a(b)(3)(xi) to allow schedule flexibility for valves not susceptible to stem-disk separation by specifying that position verification testing required by paragraph ISTC–3700 may be performed on a 10-year interval (rather than the 2-year interval specified in ISTC–3700) where justification is documented and available for NRC review. Such documentation would be required to demonstrate that the stem-disk connection is not susceptible to separation based on the internal design and evaluation of the stem-disk connection using plant-specific and industry operating experience, and vendor recommendations. This allows design information and performance data to be applied in demonstrating that a valve is not susceptible to stem-disk separation. For example, some valves with a threaded stem-disk connection are susceptible to stem-disk separation based on industry operating experience. In the event of unsuccessful position verification testing, the valve would no longer be considered to be not susceptible to stem-disk separation, and would return to the ISTC–3700 testing interval together with the results of the extent of condition review under the corrective action program. The ASME OM Code committees are considering increased schedule flexibility for position verification testing as part of a proposed Code Case. The NRC is proposing to allow up to 10 years in this condition for valve position verification testing in line with other 10-year/120-month testing intervals in the ASME OM Code and § 50.55a. However, the NRC is aware that the ASME committees are considering allowing up to 12 years as the maximum interval for valve position verification testing in a Code Case. If that Code Case is issued before the final rule is published, the NRC may adopt the 12-year maximum interval in that Code Case.

Section 50.55a(f)(4): Inservice Testing Standards Requirement for Operating Plants

The NRC proposes to modify § 50.55a(f)(4) to clarify the relationship between § 50.55a(f)(4) and (g)(4) regarding the IST or ISI programs for dynamic restraints (snubbers). In the 2006 Addenda of the BPV Code, Section XI, ASME moved the requirements for snubbers to Subsection ISTD, ''Preservice and Inservice Requirements for Dynamic Restraints (Snubbers) in Water-Cooled Reactor Nuclear Power Plants,'' of the OM Code. The NRC proposes to include provisions in this paragraph that for dynamic restraints (snubbers), inservice examination, testing, and service life monitoring must meet the inservice examination and testing requirements set forth in the applicable ASME OM Code or ASME BPV Code, Section XI, as specified in § 50.55a(b)(3)(v)(A) and (B). When using the 2006 Addenda or later of the ASME BPV Code, Section XI, the inservice examination, testing, and service life monitoring requirements for dynamic restraints (snubbers) must meet the requirements set forth in the applicable ASME OM Code as specified in § 50.55a(b)(3)(v)(B). When using the 2005 Addenda or earlier edition or addenda of the ASME BPV Code, Section XI, the inservice examination, testing, and service life monitoring requirements for dynamic restraints (snubbers) must meet the requirements set forth in either the applicable ASME OM Code or ASME BPV Code, Section XI, as specified in § 50.55a(b)(3)(v). This change to § 50.55a(f)(4), coupled with the change to § 50.55a(g)(4), clarifies the applicability of the inservice examination, testing, and service life monitoring requirements for dynamic restraints (snubbers) with either the ASME OM Code or ASME BPV Code, Section XI.

Section 50.55a(f)(7), Inservice Testing Reporting Requirements

The NRC proposes to add § 50.55a(f)(7) to require nuclear power plant applicants and licensees to submit their IST Plans and interim IST Plan updates related to pumps and valves, and IST Plans and interim Plan updates related to snubber examination and testing to the NRC.

The ASME OM Code editions prior to the 2020 Edition state in paragraph (a) of ISTA–3200, ''Administrative Requirements,'' that ''IST Plans shall be filed with the regulatory authorities having jurisdiction at the plant site.'' However, the ASME has removed this provision from the 2020 Edition of the ASME OM Code, asserting this provision is more appropriate as a regulatory requirement rather than a Code requirement. The NRC needs these IST Plans for use in evaluating relief and alternative requests and to review deferral of quarterly testing to cold shutdowns and refueling outages. Therefore, the proposed condition retains a requirement from previous editions of the ASME OM Code.

Section 50.55a(g)(4), Inservice Inspection Standards Requirement for Operating Plants

The NRC proposes to modify § 50.55a(g)(4) to parallel proposed revisions to § 50.55a(f)(4) to clarify the relationship between § 50.55a(f)(4) and (g)(4) regarding the IST and ISI programs for dynamic restraints (snubbers). This change to § 50.55a(g)(4), coupled with the change to § 50.55a(f)(4), clarifies the applicability of the inservice examination, testing, and service life monitoring requirements for dynamic restraints (snubbers) with either the ASME OM Code or ASME BPV Code, Section XI.

As discussed in public meetings on August 21, 2020, September 24, 2020, and January 19, 2021, the NRC also considered revising § 50.55a(g)(4) to clarify requirements for operational leakage. (Meeting summaries for the first two are available at ADAMS Accession Nos. ML20265A083 and ML20338A553; the summary for the January meeting is not yet available). The intent of the revision being considered was to clarify that ASME Code methodologies, or approved alternatives, must be used to evaluate structural integrity when operational leakage occurs regardless of the plant operating state during which the through-wall leakage is discovered. This has been the NRC's longstanding

position on this issue. Because there is no change in agency position or interpretation of this requirement, the NRC determined that the issuance of a generic communication, rather than a rule change, should be sufficient to communicate the agency's requirements. Therefore, the NRC decided not to propose revisions to clarify the existing operational leakage requirements in the proposed rule. The NRC will follow its established procedures for development of any generic communications, including appropriate opportunities for stakeholder input.

IV. Section-by-Section Analysis

Paragraph (a)(1)(i)(E)

This proposed rule would revise paragraphs (a)(1)(i)(E)(*18*) and (*19*) and add new paragraph (a)(1)(i)(E)(*20*) to include the 2019 Edition of the ASME BPV Code.

Paragraph (a)(1)(ii)(A)

This proposed rule would remove and reserve paragraph (a)(1)(ii)(A).

Paragraph (a)(1)(ii)(B)

This proposed rule would revise paragraph (a)(1)(ii)(B) and remove paragraphs (a)(1)(ii)(B)(*5*) through (*7*).

Paragraph (a)(1)(ii)(C)

This proposed rule would remove and reserve paragraphs (a)(1)(ii)(C)(*1*) through (*32*) and paragraphs (a)(1)(ii)(C)(*37*) through (*40*), revise paragraphs (a)(1)(ii)(C)(*54*) and (*55*), and add new paragraph (a)(1)(ii)(C)(*56*) to include the 2019 Edition of the ASME BPV Code.

Paragraph (a)(1)(iv)

This proposed rule would revise paragraph (a)(1)(iv)(B)(*1*) and remove and reserve paragraph (a)(1)(iv)(B)(*2*) and it would revise paragraphs (a)(1)(iv)(C)(*2*) and (*3*) to replace the 2015 Edition with the 2017 Edition and the 2017 Edition with the 2020 Edition of the ASME OM Code, respectively.

Paragraph (a)(1)(v)(B)

This proposed rule would revise paragraphs (a)(1)(v)(B)(*2*) and (*3*) and add new paragraphs (a)(1)(v)(B)(*4*) through (*6*) to include the 2011 addenda, and the 2012 and the 2015 Editions of the ASME NQA–1 Code.

Paragraph (b)(1)

This proposed rule would revise paragraphs (b)(1) introductory text, Table 1 in paragraphs (b)(1)(ii), (iii), and (iv) to retain the applicability to users of the latest edition incorporated by reference in paragraph (a)(1)(i). It would also revise paragraph (b)(1)(iv) to include the use of the 2015 Edition of NQA–1 and paragraph (b)(1)(x) introductory text and paragraphs (b)(1)(x)(A) and (B) to add ''through the latest edition and addenda incorporated by reference in paragraph (a)(1)(i).'' New paragraph (b)(1)(xiii) introductory text and paragraphs (b)(1)(xiii)(A) and (B) which apply to preservice inspection of steam generator tubes would also be added.

Paragraph (b)(2)

This proposed rule would revise paragraph (b)(2) introductory text to retain the applicability to users of the latest edition incorporated by reference in paragraph (a)(1)(ii).

Paragraph (b)(2)(viii)

This proposed rule would remove and reserve paragraphs (b)(2)(viii)(A) through (D).

Paragraph (b)(2)(ix)

This proposed rule would revise paragraph (b)(2)(ix) to remove references to Section XI editions and addenda prior to the 2001 Edition and to retain the applicability to users of the latest edition incorporated by reference in paragraph (a)(1)(ii). This proposed rule would also revise paragraph (b)(2)(ix)(B) to remove references to Section XI editions and addenda prior to the 2001 Edition. This proposed rule would also remove and reserve paragraphs (b)(2)(ix)(C) through (E).

Paragraph (b)(2)(x)

This proposed rule would revise paragraph (b)(2)(x) to include the use of NQA–1b–2011 Addenda to NQA–1–2008 Edition, and the 2012 and the 2015 Editions of NQA–1. The proposed rule would also remove the reference to IWA–1400.

Paragraph (b)(2)(xii)

This proposed rule would revise paragraph (b)(2)(xii) to replace the reference to Section XI, 1997 Addenda with the reference to Section XI, 2001 Edition.

Paragraph (b)(2)(xiv)

This proposed rule would revise paragraph (b)(2)(xiv) to replace the reference to the 1999 Addenda with the reference to the 2001 Edition.

Paragraph (b)(2)(xv)

This proposed rule would revise paragraph (b)(2)(xv) to remove the phrase ''the 1995 Edition through.''

Paragraph (b)(2)(xviii)

This proposed rule would revise paragraph (b)(2)(xviii) to remove references to Section XI editions and addenda prior to the 2001 Edition and to retain the applicability to users of the latest edition incorporated by reference in paragraph (a)(1)(ii). This proposed rule would also revise paragraph (b)(2)(xviii)(D) to add an option to allow the requirement in the 2019 Edition, Appendix VII, Table VII–4110–1 as an alternative to Table VII–4110–1 and Appendix VIII, Subarticle VIII–2200.

Paragraph (b)(2)(xix)

This proposed rule would revise paragraph (b)(2)(xix) to remove references to Section XI editions and addenda prior to the 2001 Edition.

Paragraph (b)(2)(xx)

This proposed rule would revise paragraph (b)(2)(xx)(A) to replace the reference to the 1997 Addenda with the reference to the 2001 Edition. This proposed rule would also revise paragraph (b)(2)(xx)(C) to retain the applicability to users of the latest edition incorporated by reference in paragraph (a)(1)(ii) and remove reference to IWB–5210(c).

Paragraph (b)(2)(xxi)

This proposed rule would revise paragraph (b)(2)(xxi)(B) to retain the applicability to users of the latest edition incorporated by reference in paragraph (a)(1)(ii).

Paragraph (b)(2)(xxv)

This proposed rule would revise paragraph (b)(2)(xxv) introductory text and revise paragraph (b)(2)(xxv)(B) to extend the applicability to users of the latest edition incorporated by reference in paragraph (a)(1)(ii). This proposed rule would also revise paragraph (b)(2)(xxv)(B)(*2*) to provide an alternative by allowing loss of material rates to be measured at an alternative location with similar corrosion conditions, similar flow characteristics, and the same piping configuration. This proposed rule would also revise paragraph (b)(2)(xxv)(B)(*3*) to delete the refueling outage interval examination requirement and only require the examination to occur at half the modification's expected life or, if the modification has an expected life greater than 19 years, once per interval. This proposed rule would also revise paragraph (b)(2)(xxv)(B)(*3*)(*i*) to make editorial changes and revise paragraph (b)(2)(xxv)(B)(*3*)(*ii*) to include a provision that would allow an extension of the required inspection if the modification location is recoated prior to backfill.

Paragraph (b)(2)(xxvi)

This proposed rule would revise paragraph (b)(2)(xxvi) to remove the requirements for pressure testing in accordance with IWA–5211(a) and NDE examination. This proposed rule would also revise paragraph (b)(2)(xxvi) to add a requirement for the owner to establish the type of leak test, test medium, test pressure, and acceptance criteria that would demonstrate the joint's leak tightness.

Paragraph (b)(2)(xxix)

This proposed rule would revise paragraph (b)(2)(xxix) to add paragraphs (b)(2)(xxix)(A), (B), and (C) to allow the use of Supplement 2 of Nonmandatory Appendix R of Section XI in the 2017 and 2019 Editions without submittal of an alternative in accordance with § 50.55a(z).

Paragraph (b)(2)(xxxii)

This proposed rule would revise the reporting requirements in paragraph (b)(2)(xxxii) to extend the timeframe for submittal of Summary Reports or Owner Activity Reports to 120 days.

Paragraph (b)(2)(xxxvi)

This proposed rule would revise paragraph (b)(2)(xxxvi) to retain applicability to users of the latest edition incorporated by reference in paragraph (a)(1)(ii).

Paragraph (b)(2)(xxxix)

This proposed rule would revise paragraph (b)(2)(xxxix) to retain applicability to users of the latest edition incorporated by reference in paragraph (a)(1)(ii).

Paragraph (b)(2)(xl)

This proposed rule would revise paragraph (b)(2)(xl) to extend applicability to users of the latest edition incorporated by reference in paragraph (a)(1)(ii) and to extend the prohibitions and restrictions on the use of certain characteristics of high-strength steels in IWB–3510.4(b) to IWC–3510.5(b), Table A–4200–1, and Table G–2110–1 in the 2020 Edition of ASME Code, Section XI.

Paragraph (b)(2)(xliii)

This proposed rule would add new paragraph (b)(2)(xliii) to require submission of certain analyses to the NRC for review.

Paragraph (b)(3)

This proposed rule would revise paragraph (b)(3) to remove references to specific editions or addenda and to extend the applicability to users of the latest edition incorporated by reference in paragraph (a)(1)(iv).

Paragraph (b)(3)(iii)

This proposed rule would revise paragraph (b)(3)(iii) for clarity of the date of application of this condition.

Paragraph (b)(3)(iv)

This proposed rule would revise paragraph (b)(3)(iv) to update the conditions for use of Appendix II of the ASME OM Code, 2003 Addenda through the 2012 Edition and revise the paragraph for clarity.

Paragraph (b)(3)(vii)

This proposed rule would remove and reserve paragraph (b)(3)(vii).

Paragraph (b)(3)(viii)

This proposed rule would revise paragraph (b)(3)(viii) to prevent it from applying to editions later than the 2017 Edition of the ASME OM Code.

Paragraph (b)(3)(ix)

This proposed rule would revise paragraph (b)(3)(ix) to remove the reference to Subsection ISTF of the 2011 Addenda and 2015 Edition.

Paragraph (b)(3)(xi)

This proposed rule would revise paragraph (b)(3)(xi) to remove reference to ASME OM Code addenda, revise the paragraph for clarity, and allow increased flexibility in the schedule for position verification testing of valves not susceptible to stem-disk separation.

Paragraph (f)(4)

This proposed rule would revise paragraph (f)(4) to clarify the relationship between paragraphs (f)(4) and (g)(4) regarding the IST and ISI programs for dynamic restraints.

Paragraph (f)(7)

This proposed rule would add new paragraph (f)(7) to include the requirements for inservice testing reporting.

Paragraph (g)(4)

This proposed rule would revise paragraph (g)(4) to clarify the relationship between paragraphs (f)(4) and (g)(4) regarding the IST and ISI programs for dynamic restraints.

V. Generic Aging Lessons Learned Report

Background

In December 2010, the NRC issued ''Generic Aging Lessons Learned (GALL) Report,'' NUREG–1801, Revision 2 (ADAMS Accession No. ML103490041), for applicants to use in preparing license renewal applications. The GALL Report provides aging management programs (AMPs) that the NRC has concluded are sufficient for aging management in accordance with the license renewal rule, as required in § 54.21(a)(3). In addition, ''Standard Review Plan for Review of License Renewal Applications for Nuclear Power Plants,'' NUREG–1800, Revision 2 (ADAMS Accession No. ML103490036), was issued in December 2010, to ensure the quality and uniformity of NRC reviews of license renewal applications and to present a well-defined basis on which the NRC evaluates the applicant's aging management programs and activities. In April 2011, the NRC also issued ''Disposition of Public Comments and Technical Bases for Changes in the License Renewal Guidance Documents NUREG–1801 and NUREG–1800,'' NUREG–1950 (ADAMS Accession No. ML11116A062), which describes the technical bases for the changes in Revision 2 of the GALL Report and Revision 2 of the standard review plan (SRP) for review of license renewal applications.

Revision 2 of the GALL Report, in Sections XI.M1, XI.S1, XI.S2, XI.M3, XI.M5, XI.M6, XI.M11B and XI.S3, describes the evaluation and technical bases for determining the sufficiency of ASME BPV Code Subsections IWB, IWC, IWD, IWE, IWF, or IWL for managing aging during the period of extended operation (*i.e.,* up to 60 years of operation). In addition, many other AMPs in the GALL Report rely, in part but to a lesser degree, on the requirements specified in the ASME BPV Code, Section XI. Revision 2 of the GALL Report also states that the 1995 Edition through the 2004 Edition of the ASME BPV Code, Section XI, Subsections IWB, IWC, IWD, IWE, IWF, or IWL, as modified and limited by § 50.55a, were found to be acceptable editions and addenda for complying with the requirements of § 54.21(a)(3), unless specifically noted in certain sections of the GALL Report. The GALL Report further states that future **Federal Register** documents that amend § 50.55a will discuss the acceptability of editions and addenda more recent than the 2004 Edition for their applicability to license renewal. In a final rule issued on June 21, 2011 (76 FR 36232), subsequent to Revision 2 of the GALL Report, the NRC also found that the 2004 Edition with the 2005 Addenda through the 2007 Edition with the 2008 Addenda of Section XI of the ASME BPV Code, Subsections IWB, IWC, IWD, IWE, IWF, or IWL, as subject to the conditions in

§ 50.55a, are acceptable for the AMPs in the GALL Report and the conclusions of the GALL Report remain valid with the augmentations specifically noted in the GALL Report. In a final rule issued on July 18, 2017 (82 FR 32934), the NRC further finds that the 2009 Addenda through the 2017 Edition of Section XI of the ASME BPV Code, Subsections IWB, IWC, IWD, IWE, IWF, or IWL, as subject to the conditions in § 50.55a, will be acceptable for the AMPs in the GALL Report. Also, in a final rule issued on May 4, 2020 (85 FR 26540), the NRC further finds that Subsections IWB, IWC, IWD, IWE, IWF, or IWL of Section XI of the 2015 Edition and the 2017 Edition of the ASME BPV Code, as subject to the conditions in § 50.55a, will be acceptable for the AMPs in the GALL Report.

In July 2017, the NRC issued ''Generic Aging Lessons Learned for Subsequent License Renewal (GALL–SLR) Report,'' NUREG–2191 (ADAMS Accession Nos. ML17187A031 and ML17187A204), for applicants to use in preparing applications for subsequent license renewal. The GALL–SLR Report provides AMPs that are sufficient for aging management for the subsequent period of extended operation (*i.e.,* up to 80 years of operation), as required in § 54.21(a)(3). The NRC also issued ''Standard Review Plan for Review of Subsequent License Renewal Applications for Nuclear Power Plants'' (SRP–SLR), NUREG–2192 in July 2017 (ADAMS Accession No. ML17188A158). In a similar manner as the GALL Report does, the GALL–SLR Report, in Sections XI.M1, XI.S1, XI.S2, XI.M3, XI.11B, and XI.S3, describes the evaluation and technical bases for determining the sufficiency of ASME BPV Code Subsections IWB, IWC, IWD, IWE, IWF, or IWL for managing aging during the subsequent period of extended operation. Many other AMPs in the GALL–SLR Report rely, in part but to a lesser degree, on the requirements specified in the ASME BPV Code, Section XI. The GALL–SLR Report also indicates that the 1995 Edition through the 2013 Edition of the ASME BPV Code, Section XI, Subsections IWB, IWC, IWD, IWE, IWF, or IWL, as subject to the conditions in § 50.55a, are acceptable for complying with the requirements of § 54.21(a)(3), unless specifically noted in certain sections of the GALL–SLR Report.

Evaluation With Respect to Aging Management

As part of this proposed rule, the NRC evaluated whether those AMPs in the GALL Report and GALL–SLR Report that rely upon Subsections IWB, IWC, IWD, IWE, IWF, or IWL of Section XI in the editions and addenda of the ASME BPV Code incorporated by reference into § 50.55a, in general continue to be acceptable if the AMP relies upon these Subsections in the 2019 Edition. The NRC finds that the 2019 Edition of Section XI of the ASME BPV Code, Subsections IWB, IWC, IWD, IWE, IWF, or IWL, as subject to the conditions of this proposed rule, are acceptable for the AMPs in the GALL Report and GALL–SLR Report with the exception of augmentation, as specifically noted in those reports, and the NRC finds that the conclusions of the GALL Report and GALL–SLR Report remain valid. Accordingly, an applicant for license renewal (including subsequent license renewal) may use, in its plant-specific license renewal application, Subsections IWB, IWC, IWD, IWE, IWF, or IWL of Section XI of the 2019 Edition of the ASME BPV Code, as subject to the conditions in this proposed rule, without additional justification. Similarly, a licensee approved for license renewal that relied on the AMPs may use Subsections IWB, IWC, IWD, IWE, IWF, or IWL of Section XI of the 2019 Edition of the ASME BPV Code. However, applicants must assess and follow applicable NRC requirements with regard to licensing basis changes and evaluate the possible impact on the elements of existing AMPs.

Some of the AMPs in the GALL Report and GALL–SLR Report recommend augmentation of certain Code requirements in order to ensure adequate aging management for license renewal. The technical and regulatory aspects of the AMPs for which augmentations are recommended also apply if the 2019 Edition of Section XI of the ASME BPV Code is used to meet the requirements of § 54.21(a)(3). The NRC evaluated the changes in the 2019 Edition of Section XI of the ASME BPV Code to determine if the augmentations described in the GALL Report and GALL–SLR Report remain necessary; the NRC's evaluation has concluded that the augmentations described in the GALL and GALL–SLR Reports are necessary to ensure adequate aging management.

For example, GALL–SLR Report AMP XI.S3, ''ASME Section XI, Subsection IWF'', recommends that volumetric examination consistent with that of the ASME BPV Code, Section XI, Table IWB–2500–1, Examination Category B–G–1 should be performed to detect cracking for high strength structural bolting (actual measured yield strength greater than or equal to 150 kilopound per square inch (ksi)) in sizes greater than 1 inch nominal diameter. The GALL–SLR Report also indicates that this volumetric examination may be waived with adequate plant-specific justification. This guidance for aging management in the GALL–SLR Report is the augmentation of the visual examination specified in Subsection IWF of the 2019 Edition of the ASME BPV Code, Section XI.

A license renewal applicant may either augment its AMPs as described in the GALL Report and GALL–SLR Report (for operation up to 60 and 80 years respectively), or propose alternatives for the NRC to review as part of the applicant's plant-specific justification for its AMPs.

VI. Plain Writing

The Plain Writing Act of 2010 (Pub. L. 111–274) requires Federal agencies to write documents in a clear, concise, and well-organized manner. The NRC has written this document to be consistent with the Plain Writing Act as well as the Presidential Memorandum, ''Plain Language in Government Writing,'' published June 10, 1998 (63 FR 31883). The NRC requests comment on this document with respect to the clarity and effectiveness of the language used.

VII. Voluntary Consensus Standards

The National Technology Transfer and Advancement Act of 1995, Public Law 104–113 (NTTAA), and implementing guidance in U.S. Office of Management and Budget (OMB) Circular A–119 (revised on January 27, 2016), requires that Federal agencies use technical standards that are developed or adopted by voluntary consensus standards bodies unless using such a standard is inconsistent with applicable law or is otherwise impractical. The NTTAA requires Federal agencies to use industry consensus standards to the extent practical; it does not require Federal agencies to endorse a standard in its entirety. Neither the NTTAA nor Circular A–119 prohibit an agency from adopting a voluntary consensus standard while taking exception to specific portions of the standard, if those provisions are deemed to be ''inconsistent with applicable law or otherwise impractical.'' Furthermore, taking specific exceptions furthers the Congressional intent of Federal reliance on voluntary consensus standards because it allows the adoption of substantial portions of consensus standards without the need to reject the standards in their entirety because of limited provisions that are not acceptable to the agency.

In this proposed rule, the NRC is continuing its existing practice of establishing requirements for the design,

construction, operation, ISI (examination) and IST of nuclear power plants by approving the use of the latest editions and addenda of the ASME BPV and OM Codes (ASME Codes) in § 50.55a. The ASME Codes are voluntary consensus standards, developed by participants with broad and varied interests, in which all interested parties (including the NRC and licensees of nuclear power plants) participate. Therefore, the NRC's incorporation by reference of the ASME Codes is consistent with the overall objectives of the NTTAA and OMB Circular A–119.

As discussed in Section III of this document, this proposed rule would condition the use of certain provisions of the 2019 Edition to the ASME BPV Code, Section III, Division 1 and the ASME BPV Code, Section XI, Division 1, as well as the 2020 Edition to the ASME OM Code. In addition, the NRC proposes not to adopt (exclude) certain provisions of the ASME Codes as discussed in this document, and in the regulatory and backfit analysis for this proposed rule. The NRC finds that this proposed rule complies with the NTTAA and OMB Circular A–119 despite these conditions and ''exclusions.''

If the NRC did not conditionally accept the ASME editions, addenda, and code cases, the NRC would disapprove them entirely. The effect would be that licensees and applicants would submit a larger number of requests for the use of alternatives under § 50.55a(z), requests for relief under § 50.55a(f) and (g), or requests for exemptions under § 50.12 and/or § 52.7. These requests would likely include broad-scope requests for approval to issue the full scope of the ASME Code editions and addenda which would otherwise be approved as proposed in this proposed rule (*i.e.,* the request would not be simply for approval of a specific ASME Code provision with conditions). These requests would be an unnecessary additional burden for both the licensee and the NRC, inasmuch as the NRC has already determined that the ASME Codes and Code Cases that are the subject of this proposed rule are acceptable for use (in some cases with conditions). For these reasons, the NRC concludes that this proposed rule's treatment of ASME Code editions and addenda, and code cases and any conditions placed on them does not conflict with any policy on agency use of consensus standards specified in OMB Circular A–119.

The NRC did not identify any other voluntary consensus standards developed by U.S. voluntary consensus standards bodies for use within the U.S. that the NRC could incorporate by reference instead of the ASME Codes. The NRC also did not identify any voluntary consensus standards developed by multinational voluntary consensus standards bodies for use on a multinational basis that the NRC could incorporate by reference instead of the ASME Codes. The NRC identified codes addressing the same subject as the ASME Codes for use in individual countries. At least one country, Korea, directly translated the ASME Code for use in that country. In other countries (*e.g.,* Japan), the ASME Codes were the basis for development of the country's codes, but the ASME Codes were substantially modified to accommodate that country's regulatory system and reactor designs. Finally, there are countries (*e.g.,* the Russian Federation) where that country's code was developed without regard to the ASME Code. However, some of these codes may not meet the definition of a voluntary consensus standard because they were developed by the state rather than a voluntary consensus standards body. Evaluation by the NRC of the countries' codes to determine whether each code provides a comparable or enhanced level of safety when compared against the level of safety provided under the ASME Codes would require a significant expenditure of agency resources. This expenditure does not seem justified, given that substituting another country's code for the U.S. voluntary consensus standard does not appear to substantially further the apparent underlying objectives of the NTTAA.

In summary, this proposed rule satisfies the requirements of the NTTAA and OMB Circular A–119.

VIII. Incorporation by Reference—Reasonable Availability to Interested Parties

The NRC proposes to incorporate by reference two recent editions to the ASME Codes for nuclear power plants. The NRC is also proposing to incorporate by reference the 2011 Addenda to ASME NQA–1–2008, Quality Assurance Requirements for Nuclear Facility Applications (ASME NQA–1b–2011), and the 2012 and 2015 Editions of ASME NQA–1, Quality Assurance Requirements for Nuclear Facility Applications. As described in the ''Background'' and ''Discussion'' sections of this document, these materials contain standards for the design, fabrication, and inspection of nuclear power plant components.

The NRC is required by law to obtain approval for incorporation by reference from the Office of the Federal Register (OFR). The OFR's requirements for incorporation by reference are set forth in 1 CFR part 51. On November 7, 2014, the OFR adopted changes to its regulations governing incorporation by reference (79 FR 66267). The OFR regulations require an agency to include in a proposed rule a discussion of the ways that the materials the agency proposes to incorporate by reference are reasonably available to interested parties or how it worked to make those materials reasonably available to interested parties. The discussion in this section complies with the requirement for proposed rules as set forth in § 51.5(a)(1).

The NRC considers ''interested parties'' to include all potential NRC stakeholders, not only the individuals and entities regulated or otherwise subject to the NRC's regulatory oversight. These NRC stakeholders are not a homogenous group but vary with respect to the considerations for determining reasonable availability. Therefore, the NRC distinguishes between different classes of interested parties for the purposes of determining whether the material is ''reasonably available.'' The NRC considers the following to be classes of interested parties in NRC rulemakings with regard to the material to be incorporated by reference:

- Individuals and small entities regulated or otherwise subject to the NRC's regulatory oversight (this class also includes applicants and potential applicants for licenses and other NRC regulatory approvals) and who are subject to the material to be incorporated by reference by rulemaking. In this context, ''small entities'' has the same meaning as a ''small entity'' under § 2.810.
- Large entities otherwise subject to the NRC's regulatory oversight (this class also includes applicants and potential applicants for licenses and other NRC regulatory approvals) and who are subject to the material to be incorporated by reference by rulemaking. In this context, ''large entities'' are those that do not qualify as a ''small entity'' under § 2.810.
- Non-governmental organizations with institutional interests in the matters regulated by the NRC.
- Other Federal agencies, states, local governmental bodies (within the meaning of § 2.315(c)).
- Federally-recognized and State-recognized [3] Indian tribes.

[3] State-recognized Indian tribes are not within the scope of § 2.315(c). However, for purposes of the NRC's compliance with 1 CFR 51.5, ''interested

• Members of the general public (*i.e.,* individual, unaffiliated members of the public who are not regulated or otherwise subject to the NRC's regulatory oversight) who may wish to gain access to the materials that the NRC proposes to incorporate by reference by rulemaking in order to participate in the rulemaking process.

The Technical Library, where you may examine industry codes and standards, is currently closed. You may submit your request to the Technical Library via email at *Library.Resource@nrc.gov* between 8:00 a.m. and 4:00 p.m. (EST), Monday through Friday, except Federal holidays.

Interested parties may purchase a copy of the ASME materials from ASME at Three Park Avenue, New York, NY 10016, or at the ASME website *https://www.asme.org/shop/standards.* The materials are also accessible through third-party subscription services such as IHS (15 Inverness Way East, Englewood, CO 80112; *https://global.ihs.com*) and Thomson Reuters Techstreet (3916 Ranchero Dr., Ann Arbor, MI 48108; *https://www.techstreet.com*). The purchase prices for individual documents range from $225 to $720 and the cost to purchase all documents is approximately $9,000.

For the class of interested parties constituting members of the general public who wish to gain access to the materials to be incorporated by reference in order to participate in the rulemaking, the NRC recognizes that the $9,000 cost may be so high that the materials could be regarded as not reasonably available for purposes of commenting on this proposed rule, despite the NRC's actions to make the materials available at the NRC's PDR. Accordingly, the NRC requested that ASME consider enhancing public access to these materials during the public comment period (ADAMS Accession No. ML20127H677). On April 14, 2020, the ASME agreed to make the materials available online in a read-only electronic access format during the public comment period (ADAMS Accession No. ML20127H684). Therefore, the two editions to the ASME Codes for nuclear power plants, the 2011 Addenda to ASME NQA–1–2008, and the 2012 and 2015 Editions of ASME NQA–1 that the NRC proposes to incorporate by reference in this rulemaking are available in read-only format at the ASME website *http://go.asme.org/NRC-ASME.*

The materials are available to all interested parties in multiple ways and in a manner consistent with their interest in this proposed rule. Therefore, the NRC concludes that the materials the NRC proposes to incorporate by reference in this proposed rule are reasonably available to all interested parties.

IX. Environmental Assessment and Final Finding of No Significant Environmental Impact

This proposed rule action is in accordance with the NRC's policy to incorporate by reference in § 50.55a new editions and addenda of the ASME BPV and OM Codes to provide updated rules for constructing and inspecting components and testing pumps, valves, and dynamic restraints (snubbers) in light-water nuclear power plants. The ASME Codes are national voluntary consensus standards and are required by the NTTAA to be used by Government agencies unless the use of such a standard is inconsistent with applicable law or otherwise impractical. The National Environmental Policy Act (NEPA) requires Federal agencies to study the impacts of their ''major Federal actions significantly affecting the quality of the human environment,'' and prepare detailed statements on the environmental impacts of the proposed action and alternatives to the proposed action (42 U.S.C. 4332(c); NEPA Sec. 102(C)).

The NRC has determined under NEPA, as amended, and the NRC's regulations in subpart A of 10 CFR part 51, that this proposed rule is not a major Federal action significantly affecting the quality of the human environment and, therefore, an environmental impact statement is not required. The rulemaking does not significantly increase the probability or consequences of accidents, no changes are being made in the types of effluents that may be released off-site, and there is no significant increase in public radiation exposure. The NRC concludes that the increase in occupational exposure would not be significant. This proposed rule does not involve non-radiological plant effluents and has no other environmental impact. Therefore, no significant non-radiological impacts are associated with this action. The determination of this environmental assessment is that there will be no significant off-site impact to the public from this action.

X. Paperwork Reduction Act Statement

This proposed rule contains new or amended collections of information subject to the Paperwork Reduction Act of 1995 (44 U.S.C. 3501 et seq). This proposed rule has been submitted to the Office of Management and Budget for review and approval of the information collections.

Type of submission, new or revision: Revision.

The title of the information collection: Domestic Licensing of Production and Utilization Facilities: Incorporation by Reference of American Society of Mechanical Engineers Codes and Code Cases.

The form number if applicable: Not applicable.

How often the collection is required or requested: On occasion.

Who will be required or asked to respond: Power reactor licensees and applicants for power reactors under construction.

An estimate of the number of annual responses: −22 (reduction).

The estimated number of annual respondents: −22 (reduction).

An estimate of the total number of hours needed annually to comply with the information collection requirement or request: −5,280 (reduction or reporting hours).

Abstract: This proposed rule is the latest in a series of rulemakings to amend the NRC's regulations to incorporate by reference revised and updated ASME Codes for nuclear power plants.

The U.S. Nuclear Regulatory Commission is seeking public comment on the potential impact of the information collections contained in this proposed rule and on the following issues:

1. Is the proposed information collection necessary for the proper performance of the functions of the NRC, including whether the information will have practical utility?

2. Is the estimate of the burden of the proposed information collection accurate?

3. Is there a way to enhance the quality, utility, and clarity of the information to be collected?

4. How can the burden of the proposed information collection on respondents be minimized, including the use of automated collection techniques or other forms of information technology?

A copy of the OMB clearance package and proposed rule is available in ADAMS (Accession Nos. ML20178A449 and ML20178A439) or may be viewed free of charge at the NRC's PDR, One White Flint North, 11555 Rockville Pike, Room O–1 F21, Rockville, MD 20852. You may obtain information and comment submissions related to the OMB clearance package by searching on *https://www.regulations.gov* under Docket ID NRC–2018–0290.

parties'' includes a broad set of stakeholders, including State-recognized Indian tribes.

You may submit comments on any aspect of these proposed information collection(s), including suggestions for reducing the burden and on the previously stated issues, by the following methods:

• *Federal Rulemaking Website: https://www.regulations.gov/* and search for Docket ID NRC–2018–0290.

• *Mail comments to:* FOIA, Library, and Information Collections Branch, Office of the Chief Information Officer, Mail Stop: T6–A10M, U.S. Nuclear Regulatory Commission, Washington, DC 20555–0001 or to the OMB reviewer at: OMB Office of Information and Regulatory Affairs (3150–0011), Attn: Desk Officer for the Nuclear Regulatory Commission, 725 17th Street NW, Washington, DC 20503; email: *oira_submission@omb.eop.gov.*

Submit comments by April 26, 2021. Comments received after this date will be considered if it is practical to do so, but the NRC staff is able to ensure consideration only for comments received on or before this date.

Public Protection Notification

The NRC may not conduct or sponsor, and a person is not required to respond to, a collection of information unless the document requesting or requiring the collection displays a currently valid OMB control number.

XI. Regulatory Analysis

The NRC has prepared a draft regulatory analysis on this proposed rule. The analysis examines the costs and benefits of the alternatives considered by the Commission. The NRC requests public comments on the draft regulatory analysis, (ADAMS Accession No. ML20178A448). Comments on the draft analysis may be submitted to the NRC by any method provided in the **ADDRESSES** section of this document.

XII. Backfitting and Issue Finality

Introduction

The NRC's Backfit Rule in § 50.109 states that the NRC shall require the backfitting of a facility only when it finds the action to be justified under specific standards stated in the rule. Section 50.109(a)(1) defines backfitting as the modification of or addition to systems, structures, components, or design of a facility; the design approval or manufacturing license for a facility; or the procedures or organization required to design, construct, or operate a facility. Any of these modifications or additions may result from a new or amended provision in the NRC's rules or the imposition of a regulatory position interpreting the NRC's rules that is either new or different from a previously applicable NRC position after issuance of the construction permit or the operating license or the design approval.

Section 50.55a requires nuclear power plant licensees to:

• Construct ASME BPV Code Class 1, 2, and 3 components in accordance with the rules provided in Section III, Division 1, of the ASME BPV Code (''Section III'').

• Inspect, examine, and repair or replace Class 1, 2, 3, Class MC, and Class CC components in accordance with the rules provided in Section XI, Division 1, of the ASME BPV Code (''Section XI'').

• Test Class 1, 2, and 3 pumps and valves in accordance with the rules provided in the ASME OM Code.

• Inspect, examine, repair or replace, and test Class 1, 2, and 3 dynamic restraints (snubbers) in accordance with the rules provided in either the ASME OM Code or Section XI, depending on the Code Edition.

This rulemaking proposes to incorporate by reference the 2019 Edition to the ASME BPV Code, Section III, Division 1 and ASME BPV Code, Section XI, Division 1, as well as the 2020 Edition to the ASME OM Code.

The ASME BPV and OM Codes are national consensus standards developed by participants with broad and varied interests, in which all interested parties (including the NRC and utilities) participate. A consensus process involving a wide range of stakeholders is consistent with the NTTAA, inasmuch as the NRC has determined that there are sound regulatory reasons for establishing regulatory requirements for design, maintenance, ISI, and IST by rulemaking. The process also facilitates early stakeholder consideration of backfitting issues. Thus, the NRC finds that the NRC need not address backfitting with respect to the NRC's general practice of incorporating by reference updated ASME Codes.

Overall Backfitting Considerations: Section III of the ASME BPV Code

Incorporation by reference of more recent editions and addenda of Section III of the ASME BPV Code does not affect a plant that has received a construction permit or an operating license or a design that has been approved. This is because the edition and addenda to be used in constructing a plant are, under § 50.55a, determined based on the date of the construction permit or combined license, and are not changed thereafter, except voluntarily by the licensee. The incorporation by reference of more recent editions and addenda of Section III ordinarily applies only to applicants after the effective date of the final rule incorporating these new editions and addenda. Thus, incorporation by reference of a more recent edition and addenda of Section III does not constitute ''backfitting'' as defined in § 50.109(a)(1).

Overall Backfitting Considerations: Section XI of the ASME BPV Code and the ASME OM Code

Incorporation by reference of more recent editions and addenda of Section XI of the ASME BPV Code and the ASME OM Code affects the ISI and IST programs of operating reactors. However, the Backfit Rule generally does not apply to incorporation by reference of later editions and addenda of the ASME BPV Code (Section XI) and OM Code. As previously mentioned, the NRC's longstanding regulatory practice has been to incorporate later versions of the ASME Codes into § 50.55a. Under § 50.55a, licensees shall revise their ISI and IST programs every 120 months to the latest edition and addenda of Section XI of the ASME BPV Code and the ASME OM Code incorporated by reference into § 50.55a 18 months before the start of a new 120-month ISI and IST interval. Thus, when the NRC approves and requires the use of a later version of the Code for ISI and IST, it is implementing this longstanding regulatory practice and requirement. In this rulemaking, the NRC's proposal to eliminate some older Section XI editions and addenda from the regulations these revisions would not be a backfit because the editions and addenda of codes being removed are no longer in use or available for use by licensees.

Other circumstances where the NRC does not apply the Backfit Rule to the approval and requirement to use later Code editions and addenda are as follows:

1. When the NRC takes exception to a later ASME BPV Code or OM Code provision but merely retains the current existing requirement, prohibits the use of the later Code provision, limits the use of the later Code provision, or supplements the provisions in a later Code, the Backfit Rule does not apply because the NRC is not imposing new requirements. However, the NRC explains any such exceptions to the Code in the preamble to and regulatory analysis for the rule.

2. When an NRC exception relaxes an existing ASME BPV Code or OM Code provision but does not prohibit a licensee from using the existing Code provision, the Backfit Rule does not

apply because the NRC is not imposing new requirements.

3. Modifications and limitations imposed during previous routine updates of § 50.55a have established a precedent for determining which modifications or limitations are backfits, or require a backfit analysis (*e.g.,* final rule dated September 10, 2008 (73 FR 52731), and a correction dated October 2, 2008 (73 FR 57235)). The application of the backfit requirements to modifications and limitations in the current rule are consistent with the application of backfit requirements to modifications and limitations in previous rules.

The incorporation by reference and adoption of a requirement mandating the use of a later ASME BPV Code or OM Code may constitute backfitting in some circumstances. In these cases, the NRC would perform a backfit analysis or documented evaluation in accordance with § 50.109. These include the following:

1. When the NRC endorses a later provision of the ASME BPV Code or OM Code that takes a substantially different direction from the existing requirements, the action is treated as a backfit (*e.g.,* 61 FR 41303; August 8, 1996).

2. When the NRC requires implementation of a later ASME BPV Code or OM Code provision on an expedited basis, the action is treated as a backfit. This applies when implementation is required sooner than it would be required if the NRC simply endorsed the Code without any expedited language (*e.g.,* 64 FR 51370; September 22, 1999).

3. When the NRC takes an exception to an ASME BPV Code or OM Code provision and imposes a requirement that is substantially different from the existing requirement as well as substantially different from the later Code (*e.g.,* 67 FR 60529; September 26, 2002).

Detailed Backfitting Discussion: Proposed Changes Beyond Those Necessary To Incorporate by Reference the New ASME BPV and OM Code Provisions

This section discusses the backfitting considerations for all the proposed changes to § 50.55a that go beyond the minimum changes necessary and required to adopt the new ASME Code Addenda into § 50.55a.

ASME BPV Code, Section III

1. Revise § 50.55a(b)(1)(iv) to require that when applying editions and addenda later than the 1989 Edition of Section III, the requirements of NQA–1 the 1994 Edition, the 2008 Edition, the 2009–1a Addenda to 2008 Edition and the 2015 Edition are acceptable for use, provided that the edition and addenda of NQA–1 specified in either NCA–4000 or NCA–7000 is used in conjunction with the administrative, quality, and technical provisions contained in the edition and addenda of Section III being used. This proposed revision clarifies the current requirements and is considered to be consistent with the meaning and intent of the current requirements, and therefore is not considered to result in a change in requirements. As such, this proposed change is not a backfit.

2. Add § 50.55a(b)(1)(xiii)(A) through (B) to require compliance with two new provisions related to preservice examination of steam generator tubing. The 2017 Edition of the ASME Code contains requirements for preservice examination of steam generator tubing, however, the 2019 Edition does not require these preservice examinations of steam generator tubing to be performed including the acceptance criteria. Therefore, the NRC is adding two conditions to ensure the tubing's structural integrity and ability to perform its intended function along with an adequate preservice examination baseline for future required inservice examinations. Because the new conditions restore requirements that were removed from the latest Edition of the ASME Code, the conditions do not constitute a new or changed NRC position. Therefore, this change is not a backfit.

ASME BPV Code, Section XI

1. Revise § 50.55a(a)(1)(ii) to remove the incorporation by reference of the addenda 1975 Winter Addenda, 1976 Summer Addenda 1976 Winter Addenda, and the Division 1 1977 Edition through1994 Addenda and 1998 Edition through 2000 Addenda because they incorporate by reference older editions and addenda of Section XI that are no longer in use or available for use by licensees. The revisions do not modify the current inservice inspection regulatory requirements and, therefore, are not backfits.

2. Revise § 50.55a(b)(2)(viii), (ix), (xii), (xiv), and (xv), (b)(2)(xviii)(A), and (b)(2)(xix) and (xx) to be consistent with the proposal to remove specific editions and addenda from § 50.55a(a)(1)(ii). These changes do not modify current requirements and, therefore, are not backfits.

3. Revise § 50.55a(b)(2)(viii), to delete § 50.55a(b)(2)(viii)(A) through (D), to be consistent with the proposal to remove specific editions and addenda from § 50.55a(a)(1)(ii). These changes to § 50.55a(b)(2)(viii) reflect the removal of conditions that are no longer needed because they were applicable only to the addenda and editions being removed. Therefore, this change is not a backfit.

4. Revise § 50.55a(b)(2)(ix), to delete § 50.55a(b)(2)(ix)(C) through (E), to be consistent with the proposal to remove specific editions and addenda from § 50.55a(a)(1)(ii). These changes to § 50.55a(b)(2)(ix) reflect the removal of conditions that are no longer needed because they were applicable only to the addenda and editions being removed. Therefore, this change is not a backfit.

5. Revise § 50.55a(b)(2)(x), to remove the reference to IWA–1400. This revision clarifies the condition because the editions of NQA–1 are specified in Table IWA 1600–1 instead of IWA–1400. Therefore, the revision of this condition is not a backfit.

6. Revise § 50.55a(b)(2)(xviii)(D) to add an alternative to the requirements of Table VII–4110–1 which allows NDE examiners to achieve qualification with reduced experience hours based on hours of laboratory practice. The proposed condition represents a relaxation in the current requirements. Therefore, the revision of this condition is not a backfit.

7. Revise § 50.55a(b)(2)(xxv), by revising requirements associated with: (a) Conducting wall thickness examinations at alternative locations; and (b) follow on examination requirements for external corrosion of buried piping.

The proposed condition represents a relaxation in the current requirements. Therefore, the revision of this condition is not a backfit.

8. Revise § 50.55a(b)(2)(xxvi), to allow the use of a licensee defined leak check in lieu of a Section XI pressure test and VT–2 examination of mechanical joints. The proposed condition represents a relaxation in the current requirements and allows licensees to perform a leak check in accordance with their post maintenance test program and Quality Assurance program. Therefore, the revision of this condition is not a backfit.

9. Revise § 50.55a(b)(2)(xxix), to allow the use of Nonmandatory Appendix R, Supplement 2 in the 2019 and future editions of the code. The proposed condition represents a relaxation from the current requirements. Therefore, the revision of this condition is not a backfit.

10. Revise § 50.55a(b)(2)(xxxii), to extend the timeframe for licensees to submit Summary Reports and Owner Activity Reports following completion of a refueling outage for users of the

2019 and future editions of the code. The proposed condition represents a relaxation from the current requirements. Therefore, the revision of this condition is not a backfit.

11. Revise § 50.55a(b)(2)(xl) to prohibit the use of the ASME BPV Code, Section XI, 2017 and 2019 Editions, Subparagraphs IWB–3510.4(b)(4) and IWB–3510.4(b)(5). Further, revise § 50.55a(b)(2)(xl) to prohibit the use of the ASME BPV Code, Section XI, 2019 Edition, Tables A–4200–1 and G–2110–1. The proposed updated condition on the use of IWC–3510.5(b) and the new tables does not constitute a new or changed NRC position. Therefore, the addition of this proposed condition is not a backfit.

12. Add § 50.55a(b)(2)(xliii) to require submittals of analyses performed under IWB–3720, Nonmandatory Appendix A, subparagraph A–4200(c), and Nonmandatory Appendix G, subparagraph G–2110(c). The proposed condition on regulatory submittal requirements does not constitute a new or changed NRC position. Therefore, the addition of this proposed condition is not a backfit.

ASME OM Code

1. Revise § 50.55a(a)(1)(iv) to remove the incorporation by reference of the 2011 Addenda and the 2015 Edition of the ASME OM Code, as well as make corresponding changes to § 50.55a(b)(3)(iv), (vii), and (ix) to reflect that the 2011 Addenda and the 2015 Edition are not incorporated by reference in § 50.55a. These changes remove editions of the code that are not in use. The revisions do not modify the current IST regulatory requirements and, therefore, are not backfits.

2. Revise § 50.55a(b)(3) to be consistent with the proposal to remove specific editions or addenda from § 50.55a(a)(1)(iv). These changes to § 50.55a(b)(3) are editorial and, therefore, are not backfits.

3. Revise § 50.55a(b)(3)(viii) to specify that the condition on the use of Subsection ISTE applies through the 2017 Edition of the ASME OM Code incorporated by reference in § 50.55a(a)(1)(iv). This proposed rule change would allow the use of Subsection ISTE in the 2020 Edition of the ASME OM Code without conditions and, therefore, is not a backfit.

4. Revise § 50.55a(b)(3)(xi) to allow increased flexibility in the schedule for position verification testing of valves not susceptible to stem-disk separation. This proposed change would allow increased flexibility in the testing interval where justified and, therefore, is not a backfit.

5. Revise § 50.55a(f)(4) to clarify the relationship between § 50.55a(f)(4) and (g)(4) regarding the IST and ISI programs for dynamic restraints (snubbers). This modification reflects a clarification of § 50.55a(f)(4) and (g)(4) and, therefore, is not a backfit.

6. Add § 50.55a(f)(7) to state that IST Plans and interim IST Plan updates for pumps, valves, and dynamic restraints (snubbers) must be submitted to the NRC. This requirement was specified in the ASME OM Code up to the 2020 Edition, but the ASME removed this requirement from the 2020 Edition of the ASME OM Code as more appropriate to the regulatory authority responsibilities. Therefore, this rule change is not a backfit because the NRC is continuing the current requirement and is not imposing a new requirement.

7. Modify § 50.55a(g)(4) to clarify the relationship between § 50.55a(f)(4) and (g)(4) regarding the IST and ISI programs for dynamic restraints (snubbers). This modification reflects a clarification of § 50.55a(f)(4) and (g)(4) and, therefore, is not a backfit.

Conclusion

The NRC finds that incorporation by reference into § 50.55a of the 2019 Edition of Section III, Division 1, of the ASME BPV Code subject to the identified conditions; the 2019 Edition of Section XI, Division 1, of the ASME BPV Code, subject to the identified conditions; and the 2020 Edition of the ASME OM Code subject to the identified conditions, does not constitute backfitting or represent an inconsistency with any issue finality provisions in 10 CFR part 52.

XIV. Regulatory Flexibility Certification

Under the Regulatory Flexibility Act of 1980 (5 U.S.C. 605(b)), the NRC certifies that this proposed rule does not impose a significant economical impact on a substantial number of small entities. This proposed rule affects only the licensing and operation of commercial nuclear power plants. A licensee who is a subsidiary of a large entity does not qualify as a small entity. The companies that own these plants are not ''small entities'' as defined in the Regulatory Flexibility Act or the size standards established by the NRC (§ 2.810), as the companies:

- Provide services that are not engaged in manufacturing, and have average gross receipts of more than $6.5 million over their last 3 completed fiscal years, and have more than 500 employees;
- Are not governments of a city, county, town, township or village;
- Are not school districts or special districts with populations of less than 50; and
- Are not small educational institutions.

XV. Availability of Documents

The NRC is making the documents identified in Table 1 available to interested persons through one or more of the following methods, as indicated. To access documents related to this action, see the **ADDRESSES** section of this document.

TABLE 1—AVAILABILITY OF DOCUMENTS

Document	ADAMS Accession No.
Proposed Rule Documents	
Rulemaking: Proposed Rule: Regulatory Analysis RE: Proposed Rule to Incorporate by Reference American Society of Mechanical Engineers Codes.	ML20178A448
Rulemaking: Proposed Rule: Unofficial Redline Strikeout of the NRC's Proposed Rule: RE: Proposed Rule to Incorporate by Reference American Society of Mechanical Engineers Codes.	ML20178A464
Related Documents	
Email from Louise Lund, NRC, to Allyson B. Byk, ASME, ''NRC Request for Public Access to ASME Materials—Correction Needed (Docket No. NRC–2018–0290,'' January 5, 2021.	ML21014A012
Email from Louise Lund, NRC, to Allyson B. Byk, ASME, ''NRC Request for Public Access to ASME Material the NRC Seeks to Incorporate by Reference into its Regulations (Docket No. NRC–2018–0290),'' October 22, 2020.	ML20308A511

TABLE 1—AVAILABILITY OF DOCUMENTS—Continued

Document	ADAMS Accession No.
Email from Louise Lund, NRC, to Christian A. Sanna, ASME, ''NRC Request for Public Access to ASME Material the NRC Seeks to Incorporate by Reference into its Regulations (Docket No. NRC–2018–0290),'' April 14, 2020.	ML20127H677
Email from Christian A. Sanna, ASME, to Louise Lund, NRC, ''NRC Request for Public Access to ASME Material the NRC Seeks to Incorporate by Reference into its Regulations (Docket No. NRC–2018–0290),'' April 14, 2020.	ML20127H684
Summary of the June 4, 2020, Public Meeting with the Nuclear Industry to Discuss Title 10 of the *Code of Federal Regulations,* Section 50.55a(b)(xxvi) Condition of Pressure Testing of Class 1, 2, and 3 Mechanical Joints.	ML20163A609
Summary of the June 25, 2020 Public Meeting with the Nuclear Industry to Discuss Title 10 of the *Code of Federal Regulations,* Section 50.55a(b)(xxvi) Condition of Pressure Testing of Class 1, 2, and 3 Mechanical Joints.	ML20189A286
Staff Requirements—Affirmation Session, 11:30 a.m., Friday, September 10, 1999, Commissioners' Conference Room, One White Flint North, Rockville, Maryland (Open to Public Attendance).	ML003755050
Enforcement Guidance Memorandum 14–003, ''Enforcement Discretion not to Cite Violations Involving Bolt and Stud Non-Destructive Examination Qualification Programs, while Rulemaking Changes are Being Developed,'' January 16, 2015.	ML14169A582
Information to Licensees Regarding Two NRC Inspection Manual Sections on Resolution of Degraded and Nonconforming Conditions and on Operability (Generic Letter 91–18), November 7, 1991.	ML031140549
NRC Regulatory Issue Summary 2004–16, ''Use of Later Editions and Addenda to ASME Code Section XI for Repair/Replacement Activities,'' October 19, 2004.	ML042590067
Regulatory Guide 1.28, Revision 5,''Quality Assurance Program Criteria (Design and Construction),'' October 2017.	ML17207A293
Regulatory Guide 1.147, Revision 19, ''Inservice Inspection Code Case Acceptability, ASME Section XI, Division 1,'' October 2019.	ML19128A244
Regulatory Guide 1.178, Revision 1, ''An Approach for Plant-Specific Risk-Informed Decisionmaking for Inservice Inspection of Piping,'' September 2003.	ML032510128
Regulatory Guide 1.200, Revision 2, ''An Approach for Determining the Technical Adequacy of Probabilistic Risk Assessment Results for Risk-Informed Activities,'' March 2009.	ML090410014
NUREG–0800, NRC Standard Review Plan for the Review of Safety Analysis Reports for Nuclear Power Plants: LWR Edition (NUREG–0800), Chapter 3.9.8, ''Risk-Informed Inservice Inspection of Piping,'' September 2003.	ML032510135
NUREG–1339, ''Resolution of Generic Safety Issue 29: Bolting Degradation or Failure in Nuclear Power Plants,'' June 1990.	ML031430208
NUREG–1801, Revision 2, ''Generic Aging Lessons Learned (GALL) Report,'' December 2010	ML103490041
NUREG–1800, Revision 2, ''Standard Review Plan for Review of License Renewal Applications for Nuclear Power Plants,'' December 2010.	ML103490036
NUREG–2191, ''Generic Aging Lessons Learned for Subsequent License Renewal (GALL–SLR) Report,'' July 2017.	ML17187A031 ML17187A204
NUREG–1950, ''Disposition of Public Comments and Technical Bases for Changes in the License Renewal Guidance Documents NUREG–1801 and NUREG–1800,'' April 2011.	ML11116A062
NUREG–2192, ''Standard Review Plan for Review of Subsequent License Renewal Applications for Nuclear Power Plants,'' July 2017.	ML17188A158
Report Number PNNL–29761, ''Nondestructive Examination (NDE) Training and Qualifications: Implications of Research on Human Learning and Memory, Instruction and Expertise,'' March 2020.	ML20079E343
ASME Codes, Standards, and Code Cases	
ASME BPV Code, Section III, Division 1: 2019 Edition	*http://go.asme.org/NRC-ASME*
ASME BPV Code, Section XI, Division 1: 2019 Edition	*http://go.asme.org/NRC-ASME*
ASME OM Code, Division 1: 2020 Edition	*http://go.asme.org/NRC-ASME*
ASME NQA–1b–2011	*http://go.asme.org/NRC-ASME*
ASME NQA–1–2012	*http://go.asme.org/NRC-ASME*
ASME NQA–1–2015	*http://go.asme.org/NRC-ASME*

Throughout the development of this rulemaking, the NRC may post documents related to this proposed rule, including public comments, on the Federal rulemaking website at *https://www.regulations.gov* under Docket ID NRC–2018–0290. The Federal rulemaking website allows you to receive alerts when changes or additions occur in a docket folder. To subscribe: (1) Navigate to the docket folder for NRC–2018–0290; (2) click the ''Sign up for Email Alerts'' link; and (3) enter your email address and select how frequently you would like to receive emails (daily, weekly, or monthly).

List of Subjects in 10 CFR Part 50

Administrative practice and procedure, Antitrust, Backfitting, Classified information, Criminal penalties, Education, Emergency planning, Fire prevention, Fire protection, Incorporation by reference, Intergovernmental relations, Nuclear power plants and reactors, Penalties, Radiation protection, Reactor siting criteria, Reporting and recordkeeping requirements, Whistleblowing.

For the reasons set forth in the preamble, and under the authority of the Atomic Energy Act of 1954, as amended; the Energy Reorganization Act of 1974, as amended; and 5 U.S.C. 553, the NRC proposes to adopt the following amendments to 10 CFR part 50:

PART 50—DOMESTIC LICENSING OF PRODUCTION AND UTILIZATION FACILITIES

■ 1. The authority citation for part 50 continues to read as follows:

Authority: Atomic Energy Act of 1954, secs. 11, 101, 102, 103, 104, 105, 108, 122, 147, 149, 161, 181, 182, 183, 184, 185, 186, 187, 189, 223, 234 (42 U.S.C. 2014, 2131, 2132, 2133, 2134, 2135, 2138, 2152, 2167, 2169, 2201, 2231, 2232, 2233, 2234, 2235, 2236, 2237, 2239, 2273, 2282); Energy Reorganization Act of 1974, secs. 201, 202, 206, 211 (42 U.S.C. 5841, 5842, 5846, 5851); Nuclear Waste Policy Act of 1982, sec. 306 (42 U.S.C. 10226); National Environmental Policy Act of 1969 (42 U.S.C. 4332); 44 U.S.C. 3504 note; Sec. 109, Pub. L. 96–295, 94 Stat. 783.

■ 2. In § 50.55a:

■ a. In paragraph (a)(1)(i)(E)(*18*), remove ‘‘, and’’ and add a semicolon in its place;

■ b. Revise paragraph (a)(1)(i)(E)(*19*) and add paragraph (a)(1)(i)(E)(*20*);

■ c. Revise and republish paragraphs (a)(1)(ii) and (iv), (a)(1)(v)(B), (b)(1), (b)(2) introductory text, and (b)(2)(viii) through (xiv);

■ d. In paragraph (b)(2)(xv) introductory text, remove the phrase ‘‘the 1995 Edition through’’;

■ e. Revise and republish paragraphs (b)(2)(xviii) through (xxi), (xxv), (xxvi), (xxix), (xxxii), (xxxvi), (xxxix), and (xl);

■ f. Add paragraph (b)(2)(xliii);

■ g. In paragraph (b)(3) introductory text, remove the phrase ‘‘1995 Edition through the latest edition’’ and add in its place the word ‘‘editions’’;

■ h. Revise and republish paragraph (b)(3)(iii);

■ i. In paragraph (b)(3)(iv), remove the year ‘‘2015’’ and add in its place the year ‘‘2012’’ and remove the word ‘‘shall’’ and add in its place the word ‘‘must’’ everywhere it appears;

■ j. Revise and republish paragraphs (b)(3)(vii) through (xi) and (f)(4);

■ k. Add paragraph (f)(7); and

■ l. Revise paragraph (g)(4) introductory text.

The revisions, republications, and additions read as follows:

§ 50.55a Codes and standards.

(a) * * *

(1) * * *

(i) * * *

(E) * * *

(*19*) 2017 Edition (including Subsection NCA; and Division 1 subsections NB through NG and Appendices); and

(*20*) 2019 Edition (including Subsection NCA; and Division 1 subsections NB through NG and Appendices).

(ii) *ASME Boiler and Pressure Vessel Code, Section XI.* The editions and addenda for Section XI of the ASME Boiler and Pressure Vessel Code are listed in this paragraph (a)(1)(ii), but limited by those provisions identified in paragraph (b)(2) of this section.

(A) [Reserved]

(B) ‘‘Rules for Inservice Inspection of Nuclear Power Plant Components:’’

(*1*) 1974 Edition;

(*2*) 1974 Summer Addenda;

(*3*) 1974 Winter Addenda; and

(*4*) 1975 Summer Addenda.

(C) ‘‘Rules for Inservice Inspection of Nuclear Power Plant Components—Division 1:’’

(*1*)–(*32*) [Reserved]

(*33*) 1995 Edition;

(*34*) 1995 Addenda;

(*35*) 1996 Addenda;

(*36*) 1997 Addenda;

(*37*)–(*40*) [Reserved]

(*41*) 2001 Edition;

(*42*) 2001 Addenda;

(*43*) 2002 Addenda;

(*44*) 2003 Addenda;

(*45*) 2004 Edition;

(*46*) 2005 Addenda;

(*47*) 2006 Addenda;

(*48*) 2007 Edition;

(*49*) 2008 Addenda;

(*50*) 2009b Addenda;

(*51*) 2010 Edition;

(*52*) 2011a Addenda;

(*53*) 2013 Edition;

(*54*) 2015 Edition;

(*55*) 2017 Edition; and

(*56*) 2019 Edition.

* * * * *

(iv) *ASME Operation and Maintenance Code.* The editions and addenda for the ASME Operation and Maintenance of Nuclear Power Plants are listed in this paragraph (a)(1)(iv), but limited by those provisions identified in paragraph (b)(3) of this section.

(A) ‘‘Code for Operation and Maintenance of Nuclear Power Plants:’’

(*1*) 1995 Edition;

(*2*) 1996 Addenda;

(*3*) 1997 Addenda;

(*4*) 1998 Edition;

(*5*) 1999 Addenda;

(*6*) 2000 Addenda;

(*7*) 2001 Edition;

(*8*) 2002 Addenda;

(*9*) 2003 Addenda;

(*10*) 2004 Edition;

(*11*) 2005 Addenda; and

(*12*) 2006 Addenda.

(B) ‘‘Operation and Maintenance of Nuclear Power Plants, Division 1: Section IST Rules for Inservice Testing of Light-Water Reactor Power Plants:’’

(*1*) 2009 Edition.

(*2*) [Reserved]

(C) Operation and Maintenance of Nuclear Power Plants:

(*1*) 2012 Edition, ‘‘Division 1: OM Code: Section IST’’;

(*2*) 2017 Edition; and

(*3*) 2020 Edition.

(v) * * *

(B) ASME NQA–1, ‘‘Quality Assurance Requirements for Nuclear Facility Applications:’’

(*1*) NQA–1—1994 Edition;

(*2*) NQA–1—2008 Edition;

(*3*) NQA–1a—2009;

(*4*) NQA–1b—2011 Addenda;

(*5*) NQA–1—2012 Edition; and

(*6*) NQA–1—2015 Edition.

* * * * *

(b) * * *

(1) *Conditions on ASME BPV Code Section III.* Each manufacturing license, standard design approval, and design certification under 10 CFR part 52 is subject to the following conditions. As used in this section, references to Section III refer to Section III of the ASME BPV Code and include the 1963 Edition through 1973 Winter Addenda and the 1974 Edition (Division 1) through the latest edition and addenda incorporated by reference in paragraph (a)(1)(i) of this section, subject to the following conditions:

(i) *Section III condition: Section III materials.* When applying the 1992 Edition of Section III, applicants or licensees must apply the 1992 Edition with the 1992 Addenda of Section II of the ASME Boiler and Pressure Vessel Code.

(ii) *Section III condition: Weld leg dimensions.* When applying the 1989 Addenda through the latest edition and addenda incorporated by reference in paragraph (a)(1) of this section, applicants and licensees may not apply the Section III provisions identified in Table I of this section for welds with leg size less than 1.09 tn:

TABLE I—PROHIBITED CODE PROVISIONS

Editions and addenda	Code provision
1989 Addenda through the latest edition and addenda incorporated by reference in paragraph (a)(1)(i) of this section.	Subparagraph NB–3683.4(c)(1); Subparagraph NB–3683.4(c)(2).

TABLE I—PROHIBITED CODE PROVISIONS—Continued

Editions and addenda	Code provision
1989 Addenda through 2003 Addenda	Footnote 11 to Figure NC–3673.2(b)–1; Note 11 to Figure ND–3673.2(b)–1.
2004 Edition through 2010 Edition	Footnote 13 to Figure NC–3673.2(b)–1; Note 13 to Figure ND–3673.2(b)–1.
2011 Addenda through the latest edition and addenda incorporated by reference in paragraph (a)(1)(i) of this section.	Footnote 11 to Table NC–3673.2(b)–1; Note 11 to Table ND–3673.2(b)–1.

(iii) *Section III condition: Seismic design of piping.* Applicants or licensees may use Subarticles NB–3200, NB–3600, NC–3600, and ND–3600 for seismic design of piping, up to and including the 1993 Addenda, subject to the condition specified in paragraph (b)(1)(ii) of this section. Applicants or licensees may not use these subarticles for seismic design of piping in the 1994 Addenda through the 2005 Addenda incorporated by reference in paragraph (a)(1) of this section, except that Subarticle NB–3200 in the 2004 Edition through the 2017 Edition may be used by applicants and licensees, subject to the condition in paragraph (b)(1)(iii)(A) of this section. Applicants or licensees may use Subarticles NB–3600, NC–3600, and ND–3600 for the seismic design of piping in the 2006 Addenda through the latest edition and addenda incorporated by reference in paragraph (a)(1)(i) of this section, subject to the conditions of this paragraph (b)(1)(iii) corresponding to those subarticles.

(A) *Seismic design of piping: First provision.* When applying Note (1) of Figure NB–3222–1 for Level B service limits, the calculation of Pb stresses must include reversing dynamic loads (including inertia earthquake effects) if evaluation of these loads is required by NB–3223(b).

(B) *Seismic design of piping: Second provision.* For Class 1 piping, the material and Do/t requirements of NB–3656(b) must be met for all Service Limits when the Service Limits include reversing dynamic loads, and the alternative rules for reversing dynamic loads are used.

(iv) *Section III condition: Quality assurance.* When applying editions and addenda later than the 1989 Edition of Section III, an applicant or licensee may use the requirements of NQA–1, ''Quality Assurance Requirements for Nuclear Facility Applications,'' that is both incorporated by reference in paragraph (a)(1)(v) of this section and specified in either NCA–4000 or NCA–7000 of that Edition and Addenda of Section III, provided that the administrative, quality, and technical provisions contained in that Edition and Addenda of Section III are used in conjunction with the applicant's or licensee's appendix B to this part quality assurance program; and that the applicant's or licensee's Section III activities comply with those commitments contained in the applicant's or licensee's quality assurance program description. Where NQA–1 and Section III do not address the commitments contained in the applicant's or licensee's appendix B quality assurance program description, those licensee commitments must be applied to Section III activities.

(v) *Section III condition: Independence of inspection.* Applicants or licensees may not apply the exception in NCA–4134.10(a) of Section III, 1995 Edition through 2009b Addenda of the 2007 Edition, from paragraph 3.1 of Supplement 10S–1 of NQA–1–1994 Edition.

(vi) *Section III condition: Subsection NH.* The provisions in Subsection NH, ''Class 1 Components in Elevated Temperature Service,'' 1995 Addenda through all editions and addenda up to and including the 2013 Edition incorporated by reference in paragraph (a)(1) of this section, may only be used for the design and construction of Type 316 stainless steel pressurizer heater sleeves where service conditions do not cause the components to reach temperatures exceeding 900 °F.

(vii) *Section III condition: Capacity certification and demonstration of function of incompressible-fluid pressure-relief valves.* When applying the 2006 Addenda through all editions and addenda up to and including the latest edition and addenda incorporated by reference in paragraph (a)(1)(i) of this section, applicants and licensees may use paragraph NB–7742, except that paragraph NB–7742(a)(2) may not be used. For a valve design of a single size to be certified over a range of set pressures, the demonstration of function tests under paragraph NB–7742 must be conducted as prescribed in NB–7732.2 on two valves covering the minimum set pressure for the design and the maximum set pressure that can be accommodated at the demonstration facility selected for the test.

(viii) *Section III condition: Use of ASME certification marks.* When applying editions and addenda earlier than the 2011 Addenda to the 2010 Edition, licensees may use either the ASME BPV Code Symbol Stamps or the ASME Certification Marks with the appropriate certification designators and class designators as specified in the 2013 Edition through the latest edition and addenda incorporated by reference in paragraph (a)(1) of this section.

(ix) *Section III Condition: NPT Code Symbol Stamps.* Licensees may use the NPT Code Symbol Stamp with the letters arranged horizontally as specified in ASME BPV Code Case N–852 for the service life of a component that had the NPT Code Symbol Stamp applied during the time period from January 1, 2005, through December 31, 2015.

(x) *Section III Condition: Visual examination of bolts, studs and nuts.* Applicants or licensees applying the provisions of NB–2582, NC–2582, ND–2582, NE–2582, NF–2582, NG–2582 in the 2017 Edition of Section III through the latest edition and addenda incorporated by reference in paragraph (a)(1)(i) of this section, must apply paragraphs (b)(1)(x)(A) through (B) of this section.

(A) *Visual examination of bolts, studs, and nuts: First provision.* When applying the provisions of NB–2582, NC–2582, ND–2582, NE–2582, NF–2582, NG–2582 in the 2017 Edition of Section III through the latest edition and addenda incorporated by reference in paragraph (a)(1)(i) of this section, the visual examinations are required to be performed in accordance with procedures qualified to NB–5100, NC–5100, ND–5100, NE–5100, NF–5100, NG–5100 and performed by personnel qualified in accordance with NB–5500, NC–5500, ND–5500, NE–5500, NF–5500, and NG–5500.

(B) *Visual examination of bolts, studs, and nuts: Second provision.* When applying the provisions of NB–2582, NC–2582, ND–2582, NE–2582, NF–2582, and NG–2582 in the 2017 Edition of Section III through the latest edition and addenda incorporated by reference in paragraph (a)(1)(i) of this section, bolts, studs, and nuts must be visually

examined for discontinuities including cracks, bursts, seams, folds, thread lap, voids, and tool marks.

(xi) *Section III condition: Mandatory Appendix XXVI.* When applying the 2015 and 2017 Editions of Section III, Mandatory Appendix XXVI, ''Rules for Construction of Class 3 Buried Polyethylene Pressure Piping,'' applicants or licensees must meet the following conditions:

(A) *Mandatory Appendix XXVI: First provision.* When performing fusing procedure qualification testing in accordance with XXVI–2300 and XXVI–4330 the following essential variables must be used for the performance qualification tests of butt fusion joints:

(*1*) Joint Type: A change in the type of joint from that qualified, except that a square butt joint qualifies as a mitered joint.

(*2*) Pipe Surface Alignment: A change in the pipe outside diameter (O.D.) surface misalignment of more than 10 percent of the wall thickness of the thinner member to be fused.

(*3*) PE Material: Each lot of polyethylene source material to be used in production (XXVI–2310(c)).

(*4*) Wall Thickness: Each thickness to be fused in production (XXVI–2310(c)).

(*5*) Diameter: Each diameter to be fused in production (XXVI–2310(c)).

(*6*) Cross-sectional Area: Each combination of thickness and diameter (XXVI–2310(c)).

(*7*) Position: Maximum machine carriage slope when greater than 20 degrees from horizontal (XXVI–4321(c)).

(*8*) Heater Surface Temperature: A change in the heater surface temperature to a value beyond the range tested (XXVI–2321).

(*9*) Ambient Temperature: A change in ambient temperature to less than 50 °F (10 °C) or greater than 125 °F (52 °C) (XXVI–4412(b)).

(*10*) Interfacial Pressure: A change in interfacial pressure to a value beyond the range tested (XXVI–2321).

(*11*) Decrease in Melt Bead Width: A decrease in melt bead size from that qualified.

(*12*) Increase in Heater Removal Time: An increase in heater plate removal time from that qualified.

(*13*) Decrease in Cool-down Time: A decrease in the cooling time at pressure from that qualified.

(*14*) Fusing Machine Carriage Model: A change in the fusing machine carriage model from that tested (XXVI–2310(d)).

(B) *Mandatory Appendix XXVI: Second provision.* When performing procedure qualification for high speed tensile impact testing of butt fusion joints in accordance with XXVI–2300 or XXVI–4330, breaks in the specimen that are away from the fusion zone must be retested. When performing fusing operator qualification bend tests of butt fusion joints in accordance with XXVI–4342, guided side bend testing must be used for all thicknesses greater than 1.25 inches.

(C) *Mandatory Appendix XXVI: Third provision.* When performing fusing procedure qualification tests in accordance with 2017 Edition of BPV Code Section III XXVI–2300 and XXVI–4330, the following essential variables must be used for the testing of electrofusion joints:

(*1*) Joint Design: A change in the design of an electrofusion joint.

(*2*) Fit-up Gap: An increase in the maximum radial fit-up gap qualified.

(*3*) Pipe PE Material: A change in the PE designation or cell classification of the pipe from that tested (XXVI–2322(a)).

(*4*) Fitting PE Material: A change in the manufacturing facility or production lot from that tested (XXVI–2322(b)).

(*5*) Pipe Wall Thickness: Each thickness to be fused in production (XXVI–2310(c)).

(*6*) Fitting Manufacturer: A change in fitting manufacturer.

(*7*) Pipe Diameter: Each diameter to be fused in production (XXVI–2310(c)).

(*8*) Cool-down Time: A decrease in the cool time at pressure from that qualified.

(*9*) Fusion Voltage: A change in fusion voltage.

(*10*) Nominal Fusion Time: A change in the nominal fusion time.

(*11*) Material Temperature Range: A change in material fusing temperature beyond the range qualified.

(*12*) Power Supply: A change in the make or model of electrofusion control box (XXVI–2310(f)).

(*13*) Power Cord: A change in power cord material, length, or diameter that reduces current at the coil to below the minimum qualified.

(*14*) Processor: A change in the manufacturer or model number of the processor. (XXVI–2310(f)).

(*15*) Saddle Clamp: A change in the type of saddle clamp.

(*16*) Scraping Device: A change from a clean peeling scraping tool to any other type of tool.

(xii) *Section III condition: Certifying Engineer.* When applying the 2017 and later editions of ASME BPV Code Section III, the NRC does not permit applicants and licensees to use a Certifying Engineer who is not a Registered Professional Engineer qualified in accordance with paragraph XXIII–1222 for Code-related activities that are applicable to U.S. nuclear facilities regulated by the NRC. The use of paragraph XXIII–1223 is prohibited.

(xiii) *Section III Condition: Preservice Inspection of Steam Generator Tubes.* Applicants or licensees applying the provisions of NB–5283 and NB–5360 in the 2019 Edition of Section III, must apply paragraphs (b)(1)(xiii)(A) through (B) of this section.

(A) *Preservice Inspection of Steam Generator Tubes: First provision.* When applying the provisions of NB–5283 in the 2019 Edition of Section III, a full-length preservice examination of 100 percent of the steam generator tubing in each newly installed steam generator must be performed prior to plant startup.

(B) *Preservice Inspection of Steam Generator Tubes: Second provision.* When applying the provisions of NB–5360 in the 2019 Edition of Section III, flaws revealed during preservice examination of steam generator tubing performed in accordance with paragraph (b)(1)(xiii)(A) of this section must be evaluated using the criteria in the design specifications.

(2) *Conditions on ASME BPV Code, Section XI.* As used in this section, references to Section XI refer to Section XI, Division 1, of the ASME BPV Code, and include the 1970 Edition through the 1976 Winter Addenda and the 1977 Edition through the latest edition incorporated by reference in paragraph (a)(1)(ii) of this section, subject to the following conditions:

* * * * *

(viii) *Section XI condition: Concrete containment examinations.* Applicants or licensees applying Subsection IWL, 2001 Edition through the 2004 Edition, up to and including the 2006 Addenda, must apply paragraphs (b)(2)(viii)(E) through (G) of this section. Applicants or licensees applying Subsection IWL, 2007 Edition up to and including the 2008 Addenda must apply paragraph (b)(2)(viii)(E) of this section. Applicants or licensees applying Subsection IWL, 2007 Edition with the 2009 Addenda through the latest edition and addenda incorporated by reference in paragraph (a)(1)(ii) of this section, must apply paragraphs (b)(2)(viii)(H) and (I) of this section.

(A)–(D) [Reserved]

(E) *Concrete containment examinations: Fifth provision.* For Class CC applications, the applicant or licensee must evaluate the acceptability of inaccessible areas when conditions exist in accessible areas that could indicate the presence of or the result in degradation to such inaccessible areas. For each inaccessible area identified, the applicant or licensee must provide the following in the ISI Summary Report required by IWA–6000:

(*1*) A description of the type and estimated extent of degradation, and the conditions that led to the degradation;

(*2*) An evaluation of each area, and the result of the evaluation; and

(*3*) A description of necessary corrective actions.

(F) *Concrete containment examinations: Sixth provision.* Personnel that examine containment concrete surfaces and tendon hardware, wires, or strands must meet the qualification provisions in IWA–2300. The ''owner-defined'' personnel qualification provisions in IWL–2310(d) are not approved for use.

(G) *Concrete containment examinations: Seventh provision.* Corrosion protection material must be restored following concrete containment post-tensioning system repair and replacement activities in accordance with the quality assurance program requirements specified in IWA–1400.

(H) *Concrete containment examinations: Eighth provision.* For each inaccessible area of concrete identified for evaluation under IWL–2512(a), or identified as susceptible to deterioration under IWL–2512(b), the licensee must provide the applicable information specified in paragraphs (b)(2)(viii)(E)(*1*), (*2*), and (*3*) of this section in the ISI Summary Report required by IWA–6000.

(I) *Concrete containment examinations: Ninth provision.* During the period of extended operation of a renewed license under part 54 of this chapter, the licensee must perform the technical evaluation under IWL–2512(b) of inaccessible below-grade concrete surfaces exposed to foundation soil, backfill, or groundwater at periodic intervals not to exceed 5 years. In addition, the licensee must examine representative samples of the exposed portions of the below-grade concrete, when such below-grade concrete is excavated for any reason.

(ix) *Section XI condition: Metal containment examinations.* Applicants or licensees applying Subsection IWE, 2001 Edition up to and including the 2003 Addenda, must satisfy the requirements of paragraphs (b)(2)(ix)(A) and (B), (F) through (I), and (K) of this section. Applicants or licensees applying Subsection IWE, 2004 Edition, up to and including the 2005 Addenda, must satisfy the requirements of paragraphs (b)(2)(ix)(A) and (B), (F) through (H), and (K) of this section. Applicants or licensees applying Subsection IWE, 2004 Edition with the 2006 Addenda, must satisfy the requirements of paragraphs (b)(2)(ix)(A)(*2*) and (b)(2)(ix)(B) and (K) of this section. Applicants or licensees applying Subsection IWE, 2007 Edition through the 2015 Edition, must satisfy the requirements of paragraphs (b)(2)(ix)(A)(*2*) and (b)(2)(ix)(B), (J), and (K) of this section. Applicants or licensees applying Subsection IWE, 2017 Edition, through the latest edition and addenda incorporated by reference in paragraph (a)(1)(ii) of this section must satisfy the requirements of paragraphs (b)(2)(ix)(A)(*2*) and (b)(2)(ix)(B) and (J) of this section.

(A) *Metal containment examinations: First provision.* For Class MC applications, the following apply to inaccessible areas.

(*1*) The applicant or licensee must evaluate the acceptability of inaccessible areas when conditions exist in accessible areas that could indicate the presence of or could result in degradation to such inaccessible areas.

(*2*) For each inaccessible area identified for evaluation, the applicant or licensee must provide the following in the ISI Summary Report as required by IWA–6000:

(*i*) A description of the type and estimated extent of degradation, and the conditions that led to the degradation;

(*ii*) An evaluation of each area, and the result of the evaluation; and

(*iii*) A description of necessary corrective actions.

(B) *Metal containment examinations: Second provision.* When performing remotely the visual examinations required by Subsection IWE, the maximum direct examination distance specified in Table IWA–2210–1 (2001 Edition through 2004 Edition) or Table IWA–2211–1 (2005 Addenda through the latest edition and addenda incorporated by reference in paragraph (a)(1) of this section) may be extended and the minimum illumination requirements specified may be decreased provided that the conditions or indications for which the visual examination is performed can be detected at the chosen distance and illumination.

(C)–(E) [Reserved]

(F) *Metal containment examinations: Sixth provision.* VT–1 and VT–3 examinations must be conducted in accordance with IWA–2200. Personnel conducting examinations in accordance with the VT–1 or VT–3 examination method must be qualified in accordance with IWA–2300. The ''owner-defined'' personnel qualification provisions in IWE–2330(a) for personnel that conduct VT–1 and VT–3 examinations are not approved for use.

(G) *Metal containment examinations: Seventh provision.* The VT–3 examination method must be used to conduct the examinations in Items E1.12 and E1.20 of Table IWE–2500–1, and the VT–1 examination method must be used to conduct the examination in Item E4.11 of Table IWE–2500–1. An examination of the pressure-retaining bolted connections in Item E1.11 of Table IWE–2500–1 using the VT–3 examination method must be conducted once each interval. The ''owner-defined'' visual examination provisions in IWE–2310(a) are not approved for use for VT–1 and VT–3 examinations.

(H) *Metal containment examinations: Eighth provision.* Containment bolted connections that are disassembled during the scheduled performance of the examinations in Item E1.11 of Table IWE–2500–1 must be examined using the VT–3 examination method. Flaws or degradation identified during the performance of a VT–3 examination must be examined in accordance with the VT–1 examination method. The criteria in the material specification or IWB–3517.1 must be used to evaluate containment bolting flaws or degradation. As an alternative to performing VT–3 examinations of containment bolted connections that are disassembled during the scheduled performance of Item E1.11, VT–3 examinations of containment bolted connections may be conducted whenever containment bolted connections are disassembled for any reason.

(I) *Metal containment examinations: Ninth provision.* The ultrasonic examination acceptance standard specified in IWE–3511.3 for Class MC pressure-retaining components must also be applied to metallic liners of Class CC pressure-retaining components.

(J) *Metal containment examinations: Tenth provision.* In general, a repair/replacement activity such as replacing a large containment penetration, cutting a large construction opening in the containment pressure boundary to replace steam generators, reactor vessel heads, pressurizers, or other major equipment; or other similar modification is considered a major containment modification. When applying IWE–5000 to Class MC pressure-retaining components, any major containment modification or repair/replacement must be followed by a Type A test to provide assurance of both containment structural integrity and leak-tight integrity prior to returning to service, in accordance with appendix J to this part, Option A or Option B, on which the applicant's or licensee's Containment Leak-Rate Testing Program is based. When applying IWE–5000, if a Type A, B, or C Test is performed, the test pressure

and acceptance standard for the test must be in accordance with appendix J to this part.

(K) *Metal Containment Examinations: Eleventh provision.* A general visual examination of containment leak chase channel moisture barriers must be performed once each interval, in accordance with the completion percentages in Table IWE 2411–1 of the 2017 Edition. Examination shall include the moisture barrier materials (caulking, gaskets, coatings, etc.) that prevent water from accessing the embedded containment liner within the leak chase channel system. Caps of stub tubes extending to or above the concrete floor interface may be inspected, provided the configuration of the cap functions as a moisture barrier as described previously. Leak chase channel system closures need not be disassembled for performance of examinations if the moisture barrier material is clearly visible without disassembly, or coatings are intact. The closures are acceptable if no damage or degradation exists that would allow intrusion of moisture against inaccessible surfaces of the metal containment shell or liner within the leak chase channel system. Examinations that identify flaws or relevant conditions shall be extended in accordance with paragraph IWE 2430 of the 2017 Edition.

(x) *Section XI condition: Quality assurance.* When applying the editions and addenda later than the 1989 Edition of ASME BPV Code, Section XI, licensees may use any edition or addenda of NQA–1, ''Quality Assurance Requirements for Nuclear Facility Applications,'' that is both incorporated by reference in paragraph (a)(1)(v) of this section and specified in Table IWA 1600–1 of that edition and addenda of Section XI, provided that the licensee uses its appendix B to this part quality assurance program in conjunction with Section XI requirements and the commitments contained in the licensee's quality assurance program description. Where NQA–1 and Section XI do not address the commitments contained in the licensee's appendix B quality assurance program description, those licensee commitments must be applied to Section XI activities.

(xi) [Reserved]

(xii) *Section XI condition: Underwater welding.* The provisions in IWA–4660, ''Underwater Welding,'' of Section XI, 2001 Edition through the latest edition and addenda incorporated by reference in paragraph (a)(1)(ii) of this section, are approved for use on irradiated material with the following conditions:

(A) *Underwater welding: First provision.* Licensees must obtain NRC approval in accordance with paragraph (z) of this section regarding the welding technique to be used prior to performing welding on ferritic material exposed to fast neutron fluence greater than 1×10^{17} n/cm^2 (E > 1 MeV).

(B) *Underwater welding: Second provision.* Licensees must obtain NRC approval in accordance with paragraph (z) of this section regarding the welding technique to be used prior to performing welding on austenitic material other than P-No. 8 material exposed to thermal neutron fluence greater than 1×10^{17} n/cm^2 (E < 0.5 eV). Licensees must obtain NRC approval in accordance with paragraph (z) regarding the welding technique to be used prior to performing welding on P-No. 8 austenitic material exposed to thermal neutron fluence greater than 1×10^{17} n/cm^2 (E < 0.5 eV) and measured or calculated helium concentration of the material greater than 0.1 atomic parts per million.

(xiii) [Reserved]

(xiv) *Section XI condition: Appendix VIII personnel qualification.* All personnel qualified for performing ultrasonic examinations in accordance with Appendix VIII must receive 8 hours of annual hands-on training on specimens that contain cracks. Licensees applying the 2001 Edition through the latest edition and addenda incorporated by reference in paragraph (a)(1)(ii) of this section may use the annual practice requirements in VII–4240 of Appendix VII of Section XI in place of the 8 hours of annual hands-on training provided that the supplemental practice is performed on material or welds that contain cracks, or by analyzing prerecorded data from material or welds that contain cracks. In either case, training must be completed no earlier than 6 months prior to performing ultrasonic examinations at a licensee's facility.

* * * * *

(xviii) *Section XI condition: NDE personnel certification*—(A) *NDE personnel certification: First provision.* Level I and II nondestructive examination personnel must be recertified on a 3-year interval in lieu of the 5-year interval specified in IWA–2314(a) and IWA–2314(b) of the 2001 Edition through the latest edition and addenda incorporated by reference in paragraph (a)(1)(ii) of this section.

(B) *NDE personnel certification: Second provision.* When applying editions and addenda prior to the 2007 Edition of Section XI, paragraph IWA–2316 may only be used to qualify personnel that observe leakage during system leakage and hydrostatic tests conducted in accordance with IWA 5211(a) and (b).

(C) *NDE personnel certification: Third provision.* When applying editions and addenda prior to the 2005 Addenda of Section XI, licensee's qualifying visual examination personnel for VT–3 visual examination under paragraph IWA–2317 of Section XI must demonstrate the proficiency of the training by administering an initial qualification examination and administering subsequent examinations on a 3-year interval.

(D) *NDE personnel certification: Fourth provision.* The use of Appendix VII, Table VII–4110–1 and Appendix VIII, Subarticle VIII–2200 of the 2011 Addenda through the latest edition incorporated by reference in paragraph (a)(1)(ii) of this section is prohibited. When using ASME BPV Code, Section XI editions and addenda later than the 2010 Edition, licensees and applicants must use the prerequisites for ultrasonic examination personnel certifications in Appendix VII, Table VII–4110–1 and Appendix VIII, Subarticle VIII–2200 in the 2010 Edition.

(*1*) As an alternative to Note (c) in Table VII–4110–1 of ASME BPV Code, Section XI, 2010 Edition, the 250 hours of Level I experience time may be reduced to 175 hours, if the experience time includes a minimum of 125 hours of field experience and 50 hours of laboratory practice beyond the requirements of for training in accordance with Appendix VII Subarticle 4220, provided those practice hours are dedicated to the Level I or Level II skill areas as described in ANSI/ASNT CP–189.

(*2*) As an alternative to Note (d) in Table VII–4110–1 of ASME BPV Code, Section XI, 2010 Edition, the 800 hours of Level II experience time may be reduced to 720 hours, if the experience time includes a minimum of 400 hours of field experience and a minimum of 320 hours of laboratory practice. The practice must be dedicated to scanning specimens containing flaws in materials representative of those in actual power plant components. Additionally, for Level II Certification, the candidate must pass a Mandatory Appendix VIII, Supplement 2 performance demonstration for detection and length sizing.

(xix) *Section XI condition: Substitution of alternative methods.* The provisions for substituting alternative examination methods, a combination of methods, or newly developed techniques in the 1997 Addenda of IWA–2240 must be applied when using the 2001 Edition through the 2004 Edition of Section XI of the ASME BPV

Code. The provisions in IWA–4520(c), 2001 Edition through the 2004 Edition, allowing the substitution of alternative methods, a combination of methods, or newly developed techniques for the methods specified in the Construction Code, are not approved for use. The provisions in IWA–4520(b)(2) and IWA–4521 of the 2008 Addenda through the latest edition and addenda incorporated by reference in paragraph (a)(1)(ii) of this section, allowing the substitution of ultrasonic examination for radiographic examination specified in the Construction Code, are not approved for use.

(xx) *Section XI condition: System leakage tests*—(A) *System leakage tests: First provision.* When performing system leakage tests in accordance with IWA–5213(a), 2001 Edition through 2002 Addenda, the licensee must maintain a 10-minute hold time after test pressure has been reached for Class 2 and Class 3 components that are not in use during normal operating conditions. No hold time is required for the remaining Class 2 and Class 3 components provided that the system has been in operation for at least 4 hours for insulated components or 10 minutes for uninsulated components.

(B) *System leakage tests: Second provision.* The nondestructive examination method and acceptance criteria of the 1992 Edition or later of Section III shall be met when performing system leakage tests (in lieu of a hydrostatic test) in accordance with IWA–4520 after repair and replacement activities performed by welding or brazing on a pressure retaining boundary using the 2003 Addenda through the latest edition and addenda of Section XI incorporated by reference in paragraph (a)(1)(ii) of this section. The nondestructive examination and pressure testing may be performed using procedures and personnel meeting the requirements of the licensee's/applicant's current ISI code of record.

(C) *System leakage tests: Third provision.* The use of the provisions for an alternative BWR pressure test at reduced pressure to satisfy IWA–4540 requirements as described in IWB–5210(c) of Section XI, 2017 Edition and IWA–5213(b)(2) and IWB–5221(d) of Section XI, 2017 Edition through the latest edition incorporated by reference in paragraph (a)(1)(ii) of this section may be used subject to the following conditions:

(*1*) The use of nuclear heat to conduct the BWR Class 1 system leakage test is prohibited (*i.e.,* the reactor must be in a non-critical state), except during refueling outages in which the ASME Section XI Category B–P pressure test has already been performed, or at the end of mid-cycle maintenance outages fourteen (14) days or less in duration.

(*2*) In lieu of the test condition holding time of IWA–5213(b)(2), after pressurization to test conditions, and before the visual examinations commence, the holding time shall be 1 hour for non-insulated components.

(xxi) *Section XI condition: Table IWB–2500–1 examination requirements.* (A) [Reserved]

(B) *Table IWB–2500–1 examination.* Use of the provisions of IWB–2500(f) and (g) and Table IWB–2500–1 Notes 6 and 7 of Section XI, 2017 Edition through the latest edition incorporated by reference in paragraph (a)(1)(ii) of this section, for examination of Examination Category B–D Item Numbers B3.90 and B3.100 shall be subject to the following conditions:

(*1*) A plant-specific evaluation demonstrating the criteria of IWB–2500(f) are met must be maintained in accordance with IWA–1400(l).

(*2*) The use of the provisions of IWB–2500(f) and Table IWB–2500–1 Note 6 for examination of Examination Category B–D Item Numbers B3.90 is prohibited for plants with renewed licenses in accordance with 10 CFR part 54.

(*3*) The provisions of IWB–2500(g) and Table IWB–2500–1 Notes 6 and 7 for examination of Examination Category B–D Item Numbers B3.90 and B3.100 shall not be used to eliminate the preservice or inservice volumetric examination of plants with a Combined Operating License pursuant to 10 CFR part 52, or a plant that receives its operating license after October 22, 2015.

* * * * *

(xxv) *Section XV Condition: Mitigation of defects by modification.* Use of the provisions of IWA–4340 must be subject to the following conditions:

(A) *Mitigation of defects by modification: First person.* The use of the provisions for mitigation of defects by modification in IWA–4340 of Section XI 2001 Edition through the 2010 Addenda, is prohibited.

(B) *Mitigation of defects by modification: Second provision.* The provisions for mitigation of defects by modification in IWA–4340 of Section XI, 2011 Edition through the latest edition incorporated by reference in paragraph (a)(1)(ii) of this section, may be used subject to the following conditions:

(*1*) The use of the provisions in IWA 4340 to mitigate crack-like defects or those associated with flow accelerated corrosion are prohibited.

(*2*) The design of a modification that mitigates a defect must incorporate a loss of material rate either 2 times the actual measured corrosion rate, which must be established based on wall thickness measurements conducted at least twice, in that pipe location or another location with similar corrosion conditions, similar flow characteristics, and the same piping configuration (*e.g.,* straight run of pipe, elbow, tee) as the encapsulated area, or 4 times the estimated maximum corrosion rate for the piping system.

(*3*) The licensee must perform a wall thickness examination in the vicinity of the modification and relevant pipe base metal at half its expected life or, if the modification has an expected life greater than 19 years, once per interval, and the results must be used to confirm corrosion rates, determine the next inspection date, and confirm the design inputs.

(*i*) For buried pipe locations where the loss of material has occurred due to internal corrosion, the wall thickness examinations may be conducted at a different location in the same system as long as: Wall thickness measurements were conducted at the different location at the same time as installation of the modification; the flow rate is the same or higher at the different location; the piping configuration is the same (*e.g.,* straight run of pipe, elbow, tee); and if pitting occurred at the modification location, but not the different location, wall loss values must be multiplied by four (instead of two) times the actual measured corrosion rate. Where wall loss values are greater than that assumed during the design of the modification, the structural integrity of the modification must be reanalyzed. Additionally, if the extent of degradation is different (*i.e.,* percent wall loss plus or minus 25 percent) or the corrosion mechanism (*e.g.,* general, pitting) is not the same at the different location as at the modification location, the modification must be examined at half its expected life or 10 years, whichever is sooner.

(*ii*) For buried pipe locations where loss of material has occurred due to external corrosion, the modification must be examined at half its expected life or 10 years, whichever is sooner. Alternatively, when the modification has been recoated prior to return to service, the modification may be examined at half its expected life or during the first full 10-year inspection interval after installation, whichever is sooner.

(xxvi) *Section XI condition: Pressure Testing of Class 1, 2, and 3 Mechanical Joints.* Mechanical joints in Class 1, 2, and 3 piping and components greater than NPS–1 which are disassembled

and reassembled during the performance of a Section XI repair/replacement activity requiring documentation on a Form NIS–2 shall be leak tested to ensure leak tightness. The owner shall establish the type of leak test, test medium, test pressure, acceptance criteria that would demonstrate the joint's leak tightness, and the qualifications of the personnel who will perform the leak test.

* * * * *

(xxix) *Section XI condition: Nonmandatory Appendix R.* (A) Nonmandatory Appendix R, ''Risk-Informed Inspection Requirements for Piping Supplement 1—Risk-Informed Selection Process—Method A,'' of Section XI, 2005 Addenda through the latest edition and addenda incorporated by reference in paragraph (a)(1)(ii) of this section, may not be implemented without prior NRC authorization of the proposed alternative in accordance with paragraph (z) of this section.

(B) Nonmandatory Appendix R, ''Risk-Informed Inspection Requirements for Piping, Supplement 2—Risk-Informed Selection Process—Method B'' of Section XI, 2005 Addenda through the 2015 Edition, may not be implemented without prior NRC authorization of the proposed alternative in accordance with paragraph (z) of this section.

(C) Nonmandatory Appendix R, ''Risk-Informed Inspection Requirements for Piping, Supplement 2—Risk-Informed Selection Process—Method B'' of Section XI, 2017 Edition through the latest edition and addenda incorporated by reference in paragraph (a)(1)(ii) of this section, may be implemented without prior NRC authorization of the proposed alternative in accordance with paragraph (z) of this section.

* * * * *

(xxxii) *Section XI condition: Summary report submittal.* When using ASME BPV Code, Section XI, 2010 Edition through the latest edition and addenda incorporated by reference in paragraph (a)(1)(ii) of this section, Summary Reports and Owner's Activity Reports described in IWA–6230 must be submitted to the NRC. Preservice inspection reports for examinations prior to commercial service must be submitted prior to the date of placement of the unit into commercial service. For preservice and inservice examinations performed following placement of the unit into commercial service, reports must be submitted within 120 calendar days of the completion of each refueling outage.

* * * * *

(xxxvi) *Section XI condition: Fracture toughness of irradiated materials.* When using the 2013 Edition through the latest edition incorporated by reference in paragraph (a)(1)(ii) of this section of the ASME BPV Code, Section XI, Appendix A paragraph A–4400, the licensee shall obtain NRC approval under paragraph (z) of this section before using irradiated T_0 and the associated RT_{T0} in establishing fracture toughness of irradiated materials.

* * * * *

(xxxix) *Section XI condition: Defect Removal.* The use of the provisions for removal of defects by welding or brazing in IWA–4421(c)(1) and IWA–4421(c)(2) of Section XI, 2017 Edition through the latest edition incorporated by reference in paragraph (a)(1)(ii) of this section may be used subject to the following conditions:

(A) *Defect removal requirements: First provision.* The provisions of subparagraph IWA 4421(c)(1) shall not be used to contain or isolate a defective area without removal of the defect.

(B) *Defect removal requirements: Second provision.* The provisions of subparagraph IWA–4421(c)(2) shall not be used for crack-like defects.

(xl) *Section XI condition: Prohibitions and Restrictions on use of IWB–3510.4(b), IWC–3510.5(b), Table A–4200–1, and Table G–2110–1.* The use of Subparagraphs IWB–3510.4(b)(4) and IWB–3510.4(b)(5) of ASME BPV Code, Section XI, 2017 Edition through the latest edition incorporated by reference in paragraph (a)(1)(ii) of this section is prohibited. The use of ASME BPV Code, Section XI, 2019 Edition, Subparagraphs IWC–3510.5(b)(4) and IWC–3510.5(b)(5), is prohibited. For ASME BPV Code, Section XI, 2019 Edition, Table A–4200–1 and Table G–2110–1, use of Figure A–4200–1 and Figure G–2210–1 to describe the toughness of material SA–533 Type B Class 2 is prohibited without satisfying the requirements of IWB–3510.4(c) or IWC–3510.5(c).

* * * * *

(xliii) *Section XI condition: Section XI Condition: Regulatory Submittal Requirements.* Licensees shall submit for NRC review and approval the following analyses:

(A) The analytical evaluation determining the effects of an out-of-limit condition on the structural integrity of the Reactor Coolant System, as described in IWB–3720(a);

(B) Determination of T_0 and RT_{T0}, as described in Nonmandatory Appendix A, A–4200(c); and

(C) Determination of T_0 and RT_{T0}, as described in Nonmandatory Appendix G, G–2110(c).

(3) * * *

(iii) *OM condition: New reactors.* In addition to complying with the provisions in the ASME OM Code with the conditions specified in paragraph (b)(3) of this section, holders of operating licenses for nuclear power reactors that received construction permits under this part on or after August 17, 2018, and holders of combined licenses issued under 10 CFR part 52, whose initial fuel loading occurs on or after August 17, 2018, must also comply with the following conditions, as applicable:

(A) *Power-operated valves.* Licensees must periodically verify the capability of power-operated valves to perform their design-basis safety functions.

(B) *Check valves.* Licensees must perform bi-directional testing of check valves within the IST program where practicable.

(C) *Flow-induced vibration.* Licensees must monitor flow-induced vibration from hydrodynamic loads and acoustic resonance during preservice testing or inservice testing to identify potential adverse flow effects on components within the scope of the IST program.

(D) *High risk non-safety systems.* Licensees must assess the operational readiness of pumps, valves, and dynamic restraints within the scope of the Regulatory Treatment of Non-Safety Systems for applicable reactor designs.

* * * * *

(vii) [Reserved]

(viii) *OM condition: Subsection ISTE.* Licensees may not implement the risk-informed approach for inservice testing (IST) of pumps and valves specified in Subsection ISTE, ''Risk-Informed Inservice Testing of Components in Light-Water Reactor Nuclear Power Plants,'' in the ASME OM Code, 2009 Edition through the 2017 Edition, without first obtaining NRC authorization to use Subsection ISTE as an alternative to the applicable IST requirements in the ASME OM Code, pursuant to paragraph (z) of this section.

(ix) *OM condition: Subsection ISTF.* Licensees applying Subsection ISTF, 2012 Edition must satisfy the requirements of Mandatory Appendix V, ''Pump Periodic Verification Test Program,'' of the ASME OM Code in that edition.

(x) [Reserved]

(xi) *OM condition: Valve Position Indication.* When implementing paragraph ISTC–3700, ''Position Verification Testing,'' in the ASME OM Code, 2012 Edition through the latest edition of the ASME OM Code incorporated by reference in paragraph (a)(1)(iv) of this section, licensees must

verify that valve operation is accurately indicated by supplementing valve position indicating lights with other indications, such as flow meters or other suitable instrumentation to provide assurance of proper obturator position for valves with remote position indication within the scope of Subsection ISTC including its mandatory appendices and their verification methods and frequencies. For valves not susceptible to stem-disk separation, the position verification testing specified in paragraph ISTC–3700 may be performed on a 10-year interval where the licensee documents a justification, which is made available for NRC review, demonstrating that the stem-disk connection is not susceptible to separation based on the internal design and evaluation of the stem-disk connection using plant-specific and industry operating experience and vendor recommendations.

* * * * *

(f) * * *

(4) *Inservice testing standards requirement for operating plants.* Throughout the service life of a boiling or pressurized water-cooled nuclear power facility, pumps and valves that are within the scope of the ASME OM Code must meet the inservice test requirements (except design and access provisions) set forth in the ASME OM Code and addenda that become effective subsequent to editions and addenda specified in paragraphs (f)(2) and (3) of this section and that are incorporated by reference in paragraph (a)(1)(iv) of this section, to the extent practical within the limitations of design, geometry, and materials of construction of the components. The inservice test requirements for pumps and valves that are within the scope of the ASME OM Code but are not classified as ASME BPV Code Class 1, Class 2, or Class 3 may be satisfied as an augmented IST program in accordance with paragraph (f)(6)(ii) of this section. This use of an augmented IST program may be acceptable provided the basis for deviations from the ASME OM Code, as incorporated by reference in this section, demonstrates an acceptable level of quality and safety, or that implementing the Code provisions would result in hardship or unusual difficulty without a compensating increase in the level of quality and safety, where documented and available for NRC review. When using the 2006 Addenda or later of the ASME BPV Code, Section XI, the inservice examination, testing, and service life monitoring requirements for dynamic restraints (snubbers) must meet the requirements set forth in the applicable ASME OM Code as specified in paragraph (b)(3)(v)(B) of this section. When using the 2005 Addenda or earlier edition or addenda of the ASME BPV Code, Section XI, the inservice examination, testing, and service life monitoring requirements for dynamic restraints (snubbers) must meet the requirements set forth in either the applicable ASME OM Code or ASME BPV Code, Section XI as specified in paragraph (b)(3)(v) of this section.

(i) *Applicable IST Code: Initial 120-month interval.* Inservice tests to verify operational readiness of pumps and valves, whose function is required for safety, conducted during the initial 120-month interval must comply with the requirements in the latest edition and addenda of the ASME OM Code incorporated by reference in paragraph (a)(1)(iv) of this section on the date 18 months before the date of issuance of the operating license under this part, or 18 months before the date scheduled for initial loading of fuel under a combined license under part 52 of this chapter (or the optional ASME OM Code Cases listed in NRC Regulatory Guide 1.192, as incorporated by reference in paragraph (a)(3)(iii) of this section, subject to the conditions listed in paragraph (b) of this section).

(ii) *Applicable IST Code: Successive 120-month intervals.* Inservice tests to verify operational readiness of pumps and valves, whose function is required for safety, conducted during successive 120-month intervals must comply with the requirements of the latest edition and addenda of the ASME OM Code incorporated by reference in paragraph (a)(1)(iv) of this section 18 months before the start of the 120-month interval (or the optional ASME Code Cases listed in NRC Regulatory Guide 1.147 or NRC Regulatory Guide 1.192 as incorporated by reference in paragraphs (a)(3)(ii) and (iii) of this section, respectively), subject to the conditions listed in paragraph (b) of this section.

(iii) [Reserved]

(iv) *Applicable IST Code: Use of later Code editions and addenda.* Inservice tests of pumps and valves may meet the requirements set forth in subsequent editions and addenda that are incorporated by reference in paragraph (a)(1)(iv) of this section, subject to the conditions listed in paragraph (b) of this section, and subject to NRC approval. Portions of editions or addenda may be used, provided that all related requirements of the respective editions or addenda are met.

* * * * *

(7) *Inservice testing reporting requirements.* Inservice Testing Program Test and Examination Plans (IST Plans) for pumps, valves, and dynamic restraints (snubbers) prepared to meet the requirements of the ASME OM Code must be submitted to the NRC as specified in § 50.4. IST Plans must be submitted within 90 days of their implementation for the applicable 120-month IST Program interval. IST Plan revisions must be submitted when the final safety analysis report for the applicable nuclear power plant is updated. Electronic submission is preferred.

(g) * * *

(4) *Inservice inspection standards requirement for operating plants.* Throughout the service life of a boiling or pressurized water-cooled nuclear power facility, components (including supports) that are classified as ASME Code Class 1, Class 2, and Class 3 must meet the requirements, except design and access provisions and preservice examination requirements, set forth in Section XI of editions and addenda of the ASME BPV Code that become effective subsequent to editions specified in paragraphs (g)(2) and (3) of this section and that are incorporated by reference in paragraph (a)(1)(ii) or (iv) of this section for snubber examination and testing of this section, to the extent practical within the limitations of design, geometry, and materials of construction of the components. Components that are classified as Class MC pressure retaining components and their integral attachments, and components that are classified as Class CC pressure retaining components and their integral attachments, must meet the requirements, except design and access provisions and preservice examination requirements, set forth in Section XI of the ASME BPV Code and addenda that are incorporated by reference in paragraph (a)(1)(ii) of this section subject to the condition listed in paragraph (b)(2)(vi) of this section and the conditions listed in paragraphs (b)(2)(viii) and (ix) of this section, to the extent practical within the limitation of design, geometry, and materials of construction of the components. When using the 2006 Addenda or later of the ASME BPV Code, Section XI, the inservice examination, testing, and service life monitoring requirements for dynamic restraints (snubbers) must meet the requirements set forth in the applicable ASME OM Code as specified in paragraph (b)(3)(v)(B) of this section. When using the 2005 Addenda or earlier edition or addenda of the ASME BPV Code, Section XI, the inservice examination, testing, and service life monitoring requirements for dynamic restraints (snubbers) must meet the

requirements set forth in either the applicable ASME OM Code or ASME BPV Code, Section XI as specified in paragraph (b)(3)(v) of this section.

* * * * *

Dated March 18, 2021.

For the Nuclear Regulatory Commission.

Andrea D. Veil,

Director, Office of Nuclear Reactor Regulation.

[FR Doc. 2021–06085 Filed 3–25–21; 8:45 am]

BILLING CODE 7590–01–P

DEPARTMENT OF ENERGY

10 CFR Part 1061

RIN 1990–AA50

Procedures for the Issuance of Guidance Documents

AGENCY: Office of General Counsel, Department of Energy.

ACTION: Notice of proposed rulemaking.

SUMMARY: In accordance with an Executive Order issued by the President on January 20, 2021, and for the reasons explained in the preamble of this proposed rule, the Department of Energy (DOE or ''the Department'') proposes to withdraw the Department's final rule on guidance implementing the Executive Order ''Promoting the Rule of Law Through Improved Agency Guidance Documents.''

DATES: The final rule published January 6, 2021 at 86 FR 451, effective February 5, 2021, and delayed until June 17, 2021, is proposed to be withdrawn. DOE will accept comments regarding this notice of proposed rulemaking on or before April 26, 2021. See the section entitled ''Public Participation'' for details.

ADDRESSES: Interested persons are encouraged to submit comments using the Federal eRulemaking Portal at *http://www.regulations.gov.* Follow the instructions for submitting comments. Alternatively, interested persons may submit comments, identified by RIN 1990–AA50, by any of the following methods:

1. *Federal eRulemaking Portal: http://www.regulations.gov.* Follow the instructions for submitting comments.

2. *Email: Guidance@hq.doe.gov.* Include the RIN 1990–AA50 in the subject line of the message.

No telefacsimilies (faxes) will be accepted. For detailed instructions on submitting comments and additional information on the rulemaking process, see the section on Public Participation for details.

Docket: The docket, which includes **Federal Register** notices, comments, and other supporting documents/materials, is available for review at *http://www.regulations.gov.* All documents in the docket are listed in the *http://www.regulations.gov* index. However, some documents listed in the index, such as those containing information that is exempt from public disclosure, may not be publicly available.

The docket web page can be found at *http://www.regulations.gov/* associated with RIN 1990–AA50. The docket web page contains simple instructions on how to access all documents, including public comments, in the docket. See the section on Public Participation for information on how to submit comments through *http://www.regulations.gov.*

FOR FURTHER INFORMATION CONTACT: Mr. Matthew Ring, U.S. Department of Energy, Office of the General Counsel, Forrestal Building, GC–33, 1000 Independence Avenue SW, Washington, DC 20585, (202) 586–2555, Email: *Guidance@hq.doe.gov.*

SUPPLEMENTARY INFORMATION:

I. Background

On July 1, 2020, DOE published a notice of proposed rulemaking (NOPR) in which DOE proposed a new part 1061 in title 10 of the Code of Federal Regulations to implement the requirements of Executive Order 13891, ''Promoting the Rule of Law Through Improved Agency Guidance Documents'' (84 FR 55235).[1] (85 FR 39495) After considering comments from stakeholders on the NOPR, DOE published a final rule, on January 6, 2021, establishing new 10 CFR part 1061. (86 FR 451) As required by Executive Order 13891, part 1061 contained internal DOE requirements for the contents of guidance documents, procedures for providing notice of, and soliciting public comment on, certain guidance documents, and procedures for the public to petition for the issuance, withdrawal or revision of guidance documents.

On January 20, 2021, the President issued Executive Order 13992, ''Revocation of Certain Executive Orders Concerning Federal Regulation'' (86 FR 7049), which, among other things, revoked Executive Order 13891 and directed agencies to promptly take steps to rescind any orders, rules, regulations, guidelines, or policies, or portions thereof, implementing or enforcing the Executive Order 13891. Executive Order 13992 states that it is the policy of the Administration to use available tools to confront the urgent challenges facing the Nation, including the coronavirus disease 2019 (COVID–19) pandemic, economic recovery, racial justice, and climate change. To tackle these challenges effectively, executive departments and agencies must be equipped with the flexibility to use robust regulatory action to address national priorities. This order revokes harmful policies and directives that threaten to frustrate the Federal Government's ability to confront these problems, and empowers agencies to use appropriate regulatory tools to achieve these goals.

Previously, DOE postponed the effective date of part 1061 until March 21, 2021. (86 FR 7799) DOE issued the extension consistent with the memorandum issued on January 20, 2021 by the Assistant to the President and Chief of Staff (''Chief of Staff'') outlining the President's plan for managing the Federal regulatory process at the outset of the new Administration and for the reasons described in E.O. 13992. DOE sought comment on further delay of the effective date, including the impacts of such delay, as well as comment on the legal, factual, or policy issues raised by the rule. DOE did not receive comments on these issues. Accordingly, DOE has further extended the effective date of this rule to June 17, 2021. (86 FR 14807)

II. Discussion

After consideration and review, DOE has tentatively concluded that part 1061 will hinder DOE in providing timely guidance in furtherance of DOE's statutory duties. The final rule will in particular hinder DOE's ability to address the economic recovery and climate change challenges enumerated in Executive Order 13992. As discussed in the Executive Order, agencies must have flexibility to timely and effectively address these challenges. The procedures of part 1061 are not required by the Administrative Procedure Act (5 U.S.C. 551 *et seq.*), and they limit the regulatory tools available to DOE to address the challenges listed in Executive Order 13992. Part 1061 deprives DOE of flexibility in determining when and how best to issue guidance based on particular facts and circumstances, and restricts DOE's ability to provide timely guidance on which the public can confidently rely.

[1] In the NOPR, DOE also responded to a petition for rulemaking submitted by the New Civil Liberties Alliance (NCLA) asking DOE to initiate a rulemaking to prohibit any DOE component from issuing, relying on, or defending improper agency guidance. DOE granted the petition in part and denied it in part. (85 FR 39497)

In addition, DOE's stated purpose in issuing part 1061 was to promote transparency and public involvement in the development and amendment of DOE guidance documents. DOE notes, however, that its procedures for public transparency and involvement in the development of agency guidance documents will remain unchanged by withdrawal of part 1061. DOE guidance documents will continue to be available on DOE's website. DOE will also continue its practice, as appropriate, of soliciting stakeholder input on guidance documents of significant stakeholder and public interest. Additionally, stakeholders may still petition DOE at any time to issue, withdraw or revise DOE guidance documents, or inquire about DOE guidance documents, by emailing petitions or inquiries to *Guidance@hq.doe.gov.* The benefits of binding DOE to the procedures of part 1061 therefore appear outweighed by the need for DOE to have the ability to issue guidance timely and effectively to address the challenges listed in the Executive Order, and to otherwise meet DOE's statutory duties. Moreover, DOE notes that guidance, whether issued under part 1061 or otherwise, is non-binding, and does not have the force and effect of law.

Therefore, in accordance with Executive Order 13992 and for the reasons stated above, DOE proposes to rescind its internal agency procedures for issuing guidance documents published at 10 CFR part 1061.

Public Participation

DOE will accept comments, data, and information regarding this proposed rule on or before the date provided in the **DATES** section at the beginning of this document. Interested parties may submit comments, data, and other information using any of the methods described in the **ADDRESSES** section at the beginning of this document.

Submitting comments via http://www.regulations.gov. The *http://www.regulations.gov* web page will require you to provide your name and contact information. Your contact information will be viewable to DOE General Counsel staff only. Your contact information will not be publicly viewable except for your first and last names, organization name (if any), and submitter representative name (if any). If your comment is not processed properly because of technical difficulties, DOE will use this information to contact you. If DOE cannot read your comment due to technical difficulties and cannot contact you for clarification, DOE may not be able to consider your comment.

However, your contact information will be publicly viewable if you include it in the comment itself or in any documents attached to your comment. Any information that you do not want to be publicly viewable should not be included in your comment, nor in any document attached to your comment. Otherwise, persons viewing comments will see only first and last names, organization names, correspondence containing comments, and any documents submitted with the comments.

Do not submit to *http://www.regulations.gov* information the disclosure of which is restricted by statute, such as trade secrets and commercial or financial information (hereinafter referred to as Confidential Business Information (CBI)). Comments submitted through *http://www.regulations.gov* cannot be claimed as CBI. Comments received through the website will waive any CBI claims for the information submitted. For information on submitting CBI, see the Confidential Business Information section below.

DOE processes submissions made through *http://www.regulations.gov* before posting. Normally, comments will be posted within a few days of being submitted. However, if large volumes of comments are being processed simultaneously, your comment may not be viewable for up to several weeks. Please keep the comment tracking number that *http://www.regulations.gov* provides after you have successfully uploaded your comment.

Submitting comments via email. Comments and documents submitted via email will be posted to *http://www.regulations.gov.* If you do not want your personal contact information to be publicly viewable, do not include it in your comment or any accompanying documents. Instead, provide your contact information in a cover letter. Include your first and last names, email address, telephone number, or optional mailing address. The cover letter will not be publicly viewable as long as it does not include any comments.

Include contact information each time you submit comments, data, documents, and other information to DOE.

Comments, data, and other information submitted to DOE electronically should be provided in PDF (preferred), Microsoft Word or Excel, WordPerfect, or text (ASCII) file format. Provide documents that are written in English, and that are free of any defects or viruses. Documents should not contain special characters or any form of encryption and, if possible, they should carry the electronic signature of the author.

Campaign form letters. Please submit campaign form letters by the originating organization in batches of between 50 to 500 form letters per PDF or as one form letter with a list of supporters' names compiled into one or more PDFs. This reduces comment processing and posting time.

Confidential Business Information. Pursuant to 10 CFR 1004.11, any person submitting information that he or she believes to be confidential and exempt by law from public disclosure should submit via email two well-marked copies: One copy of the document marked ''confidential'' including all the information believed to be confidential, and one copy of the document marked ''non-confidential'' that deletes the information believed to be confidential. Submit these documents via email or on a CD, if feasible. DOE will make its own determination about the confidential status of the information and will treat it according to its determination.

It is DOE's policy that all comments, including any personal information provided in the comments, may be included in the public docket, without change and as received, except for information deemed to be exempt from public disclosure.

Regulatory Analysis

A. Review Under Executive Order 12866, ''Regulatory Planning and Review''

This proposed rule is not a ''significant regulatory action'' under Executive Order 12866, ''Regulatory Planning and Review.'' 58 FR 51735 (October 4, 1993). As a result, this action was not reviewed by the Office of Information and Regulatory Affairs in the Office of Management and Budget (OMB). DOE does not anticipate that this rulemaking will have an economic impact on regulated entities. This is a proposed rule of agency procedure and practice. This proposed rule would repeal the regulations governing DOE's internal procedures for the promulgation and processing of guidance documents. DOE proposes to repeal these internal procedures as part of its implementation of Executive Order 13992 and does not anticipate incurring significant additional resource costs in doing so.

B. Review Under the Regulatory Flexibility Act

The Regulatory Flexibility Act (5 U.S.C. 601 *et seq.*) requires the preparation of an initial regulatory flexibility analysis (IRFA) for any rule

that by law must be proposed for public comment, unless the agency certifies that the rule, if promulgated, will not have a significant economic impact on a substantial number of small entities. As required by Executive Order 13272, Proper Consideration of Small Entities in Agency Rulemaking, 67 FR 53461 (August 16, 2002), DOE published procedures and policies on February 19, 2003, to ensure that the potential impacts of its rules on small entities are properly considered during the rulemaking process, 68 FR 7990. The Department has made its procedures and policies available on the Office of General Counsel's website: *http://energy.gov/gc/office-general-counsel.*

This proposed rule would repeal internal agency procedures regarding DOE's issuance of guidance documents. DOE notes, however, that its procedures for public transparency and involvement in the development of agency guidance documents will remain unchanged by the withdrawal. DOE guidance documents will continue to be available on DOE's website. DOE will also continue its practice, as appropriate, of soliciting stakeholder input on guidance documents of significant stakeholder and public interest. Additionally, stakeholders may still petition DOE at any time to issue, withdraw or revise DOE guidance documents, or inquire about DOE guidance documents, by emailing petitions or inquiries to *Guidance@hq.doe.gov.* The benefits of binding DOE to the procedures of part 1061 therefore appear outweighed by the need for DOE to have the ability to issue guidance timely and effectively to address the challenges listed in the Executive Order. Moreover, DOE notes that guidance, whether issued under part 1061 or otherwise, is non-binding, and does not have the force and effect of law. DOE therefore does not anticipate any significant economic impacts from today's proposed rule. For these reasons, DOE certifies that this rulemaking will not have a significant economic impact on a substantial number of small entities. Accordingly, DOE did not prepare an IRFA for this rulemaking. DOE's certification and supporting statement of factual basis will be provided to the Chief Counsel for Advocacy of the Small Business Administration for review under 5 U.S.C. 605(b).

C. Review Under the Paperwork Reduction Act of 1995

This proposed rule would impose no new information or record keeping requirements. Accordingly, Office of Management and Budget (OMB) clearance is not required under the Paperwork Reduction Act. (44 U.S.C. 3501 et seq).

D. Review Under the National Environmental Policy Act of 1969

DOE is analyzing this proposed regulation in accordance with the National Environmental Policy Act (NEPA) and DOE's NEPA implementing regulations (10 CFR part 1021). DOE's regulations include a categorical exclusion for rulemakings interpreting or amending an existing rule or regulation that does not change the environmental effect of the rule or regulation being amended. 10 CFR part 1021, subpart D, Appendix A5. DOE anticipates that this rulemaking qualifies for categorical exclusion A5 because it is a rulemaking that amends a rule and does not change the environmental effect of the rule and otherwise meets the requirements for application of a categorical exclusion. See 10 CFR 1021.410. DOE will complete its NEPA review before issuing the final rule.

E. Review Under Executive Order 13132, ''Federalism''

Executive Order 13132, ''Federalism,'' 64 FR 43255 (August 4, 1999), imposes certain requirements on agencies formulating and implementing policies or regulations that preempt State law or that have federalism implications. The Executive Order requires agencies to examine the constitutional and statutory authority supporting any action that would limit the policymaking discretion of the States and to carefully assess the necessity for such actions. The Executive Order also requires agencies to have an accountable process to ensure meaningful and timely input by State and local officials in the development of regulatory policies that have federalism implications. On March 14, 2000, DOE published a statement of policy describing the intergovernmental consultation process it will follow in the development of such regulations. (65 FR 13735) DOE examined this proposed rule and determined that it would not preempt State law and would not have a substantial direct effect on the States, on the relationship between the national government and the States, or on the distribution of power and responsibilities among the various levels of Government. No further action is required by Executive Order 13132.

F. Executive Order 13175 ''Consultation and Coordination With Indian Tribal Governments''

Executive Order 13175, ''Consultation and Coordination with Indian Tribal Governments,'' 65 FR 67249, November 9, 2000, applies to agency regulations that have Tribal implications, that is, regulations that have substantial direct effects on one or more Indian tribes, on the relationship between the Federal Government and Indian Tribes, or on the distribution of power and responsibilities between the Federal Government and Indian Tribes. This proposed rule has been analyzed in accordance with the principles and criteria contained in Executive Order 13175. Because this proposed rule would not significantly or uniquely affect the communities of the Indian tribal governments or impose substantial direct compliance costs on them, the funding and consultation requirements of Executive Order 13175 do not apply.

G. Review Under Executive Order 12988, ''Civil Justice Reform''

With respect to the review of existing regulations and the promulgation of new regulations, section 3(a) of Executive Order 12988, ''Civil Justice Reform,'' 61 FR 4729 (February 7, 1996), imposes on Federal agencies the general duty to adhere to the following requirements: (1) Eliminate drafting errors and ambiguity; (2) write regulations to minimize litigation; and (3) provide a clear legal standard for affected conduct, rather than a general standard and promote simplification and burden reduction. Section 3(b) of Executive Order 12988 specifically requires that Executive agencies make every reasonable effort to ensure that the regulation: (1) Clearly specifies its preemptive effect, if any; (2) clearly specifies any effect on existing Federal law or regulation; (3) provides a clear legal standard for affected conduct, while promoting simplification and burden reduction; (4) specifies its retroactive effect, if any; (5) adequately defines key terms; and (6) addresses other important issues affecting clarity and general draftsmanship under any guidelines issued by the Attorney General. Section 3(c) of Executive Order 12988 requires Executive agencies to review regulations in light of applicable standards in section 3(a) and section 3(b) to determine whether they are met or it is unreasonable to meet one or more of them. DOE has completed the required review and determined that, to the extent permitted by law, the proposed rule would meet the relevant standards of Executive Order 12988.

H. Review Under the Unfunded Mandates Reform Act of 1995

Title II of the Unfunded Mandates Reform Act of 1995 (UMRA) (Pub. L.

104–4) requires each Federal agency to assess the effects of Federal regulatory actions on State, local, and tribal governments and the private sector. For a proposed regulatory action likely to result in a rule that may cause the expenditure by State, local, and tribal governments, in the aggregate, or by the private sector of $100 million or more in any one year (adjusted annually for inflation), section 202 of UMRA requires a Federal agency to publish a written statement that estimates the resulting costs, benefits, and other effects on the national economy. (2 U.S.C. 1532(a) and (b)) The UMRA also requires a Federal agency to develop an effective process to permit timely input by elected officers of State, local, and tribal governments on a proposed ''significant intergovernmental mandate'' and requires an agency plan for giving notice and opportunity for timely input to potentially affected small governments before establishing any requirements that might significantly or uniquely affect small governments. On March 18, 1997, DOE published a statement of policy on its process for intergovernmental consultation under UMRA (62 FR 12820) (also available at *http://energy.gov/gc/office-general-counsel*). This proposed rule contains neither an intergovernmental mandate nor a mandate that may result in the expenditure of $100 million or more in any year by State, local, and tribal governments, in the aggregate, or by the private sector, so these requirements under the Unfunded Mandates Reform Act do not apply.

I. Review Under the Treasury and General Government Appropriations Act of 1999

Section 654 of the Treasury and General Government Appropriations Act of 1999 (Pub. L. 105–277) requires Federal agencies to issue a Family Policymaking Assessment for any rule that may affect family well-being. This proposed rule would not have any impact on the autonomy or integrity of the family as an institution. Accordingly, DOE has concluded that it is not necessary to prepare a Family Policymaking Assessment.

J. Review Under Executive Order 12630, ''Governmental Actions and Interference With Constitutionally Protected Property Rights''

DOE has determined, under Executive Order 12630, ''Governmental Actions and Interference with Constitutionally Protected Property Rights,'' 53 FR 8859 (March 18, 1988), that this proposed rule would not result in any takings which might require compensation under the Fifth Amendment to the United States Constitution.

K. Review Under the Treasury and General Government Appropriations Act, 2001

Section 515 of the Treasury and General Government Appropriations Act, 2001 (44 U.S.C. 3516, note) provides for agencies to review most disseminations of information to the public under guidelines established by each agency pursuant to general guidelines issued by OMB. OMB's guidelines were published at 67 FR 8452 (February 22, 2002), and DOE's guidelines were published at 67 FR 62446 (October 7, 2002). DOE has reviewed this proposed rule under the OMB and DOE guidelines and has concluded that it is consistent with applicable policies in those guidelines.

L. Review Under Executive Order 13211, ''Actions Concerning Regulations That Significantly Affect Energy Supply, Distribution, or Use''

Executive Order 13211, ''Actions Concerning Regulations That Significantly Affect Energy Supply, Distribution, or Use,'' 66 FR 28355 (May 22, 2001), requires Federal agencies to prepare and submit to the Office of Information and Regulatory Affairs (OIRA), Office of Management and Budget, a Statement of Energy Effects for any proposed significant energy action. A ''significant energy action'' is defined as any action by an agency that promulgated or is expected to lead to promulgation of a final rule, and that: (1) Is a significant regulatory action under Executive Order 12866, or any successor order; and (2) is likely to have a significant adverse effect on the supply, distribution, or use of energy, or (3) is designated by the Administrator of OIRA as a significant energy action. For any proposed significant energy action, the agency must give a detailed statement of any adverse effects on energy supply, distribution, or use should the proposal be implemented, and of reasonable alternatives to the action and their expected benefits on energy supply, distribution, and use. The proposed rule would repeal internal agency procedures and does not meet any of the three criteria listed above. Accordingly, the requirements of Executive Order 13211 do not apply.

Approval of the Office of the Secretary

The Secretary of Energy has approved publication of this proposed rule.

List of Subjects in 10 CFR Part 1061

Administrative practice and procedure.

Signing Authority

This document of the Department of Energy was signed on March 23, 2021, by John T. Lucas, Acting General Counsel, Office of the General Counsel, pursuant to delegated authority from the Secretary of Energy. That document with the original signature and date is maintained by DOE. For administrative purposes only, and in compliance with requirements of the Office of the Federal Register, the undersigned DOE Federal Register Liaison Officer has been authorized to sign and submit the document in electronic format for publication, as an official document of the Department of Energy. This administrative process in no way alters the legal effect of this document upon publication in the **Federal Register**.

Signed in Washington, DC, on March 23, 2021.

Treena V. Garrett,

Federal Register Liaison Officer, U.S. Department of Energy.

[FR Doc. 2021–06285 Filed 3–25–21; 8:45 am]

BILLING CODE 6450–01–P

DEPARTMENT OF TRANSPORTATION

Federal Aviation Administration

14 CFR Part 39

[Docket No. FAA–2021–0193; Project Identifier MCAI–2020–01612–T]

RIN 2120–AA64

Airworthiness Directives; Airbus SAS Airplanes

AGENCY: Federal Aviation Administration (FAA), DOT.

ACTION: Notice of proposed rulemaking (NPRM).

SUMMARY: The FAA proposes to adopt a new airworthiness directive (AD) for certain Airbus SAS Model A350–941 and –1041 airplanes. This proposed AD was prompted by a determination that new or more restrictive airworthiness limitations are necessary. This proposed AD would require revising the existing maintenance or inspection program, as applicable, to incorporate new or more restrictive airworthiness limitations, as specified in a European Union Aviation Safety Agency (EASA), which is proposed for incorporation by reference. This proposed AD would also require, for certain airplanes, an update of the hydraulic monitoring system to include additional redundancy. The FAA is proposing this AD to address the unsafe condition on these products.

DATES: The FAA must receive comments on this proposed AD by May 10, 2021.

ADDRESSES: You may send comments, using the procedures found in 14 CFR 11.43 and 11.45, by any of the following methods:

- *Federal eRulemaking Portal:* Go to *https://www.regulations.gov.* Follow the instructions for submitting comments.
- *Fax:* 202–493–2251.
- *Mail:* U.S. Department of Transportation, Docket Operations, M–30, West Building Ground Floor, Room W12–140, 1200 New Jersey Avenue SE, Washington, DC 20590.
- *Hand Delivery:* Deliver to Mail address above between 9 a.m. and 5 p.m., Monday through Friday, except Federal holidays.

For EASA material that will be incorporated by reference (IBR) in this AD, contact EASA, Konrad-Adenauer-Ufer 3, 50668 Cologne, Germany; telephone +49 221 8999 000; email *ADs@easa.europa.eu*; internet *www.easa.europa.eu.* You may find this IBR material on the EASA website at *https://ad.easa.europa.eu.* For Airbus SAS service information identified in this proposed AD, contact Airbus SAS, Airworthiness Office—EAL, Rond-Point Emile Dewoitine No: 2, 31700 Blagnac Cedex, France; telephone +33 5 61 93 36 96; fax +33 5 61 93 45 80; email *continued-airworthiness.a350@airbus.com*; internet *http://www.airbus.com.* You may view this IBR material at the FAA, Airworthiness Products Section, Operational Safety Branch, 2200 South 216th St., Des Moines, WA. For information on the availability of this material at the FAA, call 206–231–3195. It is also available in the AD docket on the internet at *https://www.regulations.gov* by searching for and locating Docket No. FAA–2021–0193.

Examining the AD Docket

You may examine the AD docket on the internet at *https://www.regulations.gov* by searching for and locating Docket No. FAA–2021–0193; or in person at Docket Operations between 9 a.m. and 5 p.m., Monday through Friday, except Federal holidays. The AD docket contains this NPRM, any comments received, and other information. The street address for Docket Operations is listed above.

FOR FURTHER INFORMATION CONTACT: Kathleen Arrigotti, Aerospace Engineer, Large Aircraft Section, International Validation Branch, FAA, 2200 South 216th St., Des Moines, WA 98198; telephone and fax 206–231–3218; *Kathleen.Arrigotti@faa.gov.*

SUPPLEMENTARY INFORMATION:

Comments Invited

The FAA invites you to send any written relevant data, views, or arguments about this proposal. Send your comments to an address listed under **ADDRESSES**. Include ''Docket No. FAA–2021–0193; Project Identifier MCAI–2020–01612–T'' at the beginning of your comments. The most helpful comments reference a specific portion of the proposal, explain the reason for any recommended change, and include supporting data. The FAA will consider all comments received by the closing date and may amend the proposal because of those comments.

Except for Confidential Business Information (CBI) as described in the following paragraph, and other information as described in 14 CFR 11.35, the FAA will post all comments received, without change, to *https://www.regulations.gov,* including any personal information you provide. The agency will also post a report summarizing each substantive verbal contact received about this proposed AD.

Confidential Business Information

CBI is commercial or financial information that is both customarily and actually treated as private by its owner. Under the Freedom of Information Act (FOIA) (5 U.S.C. 552), CBI is exempt from public disclosure. If your comments responsive to this NPRM contain commercial or financial information that is customarily treated as private, that you actually treat as private, and that is relevant or responsive to this NPRM, it is important that you clearly designate the submitted comments as CBI. Please mark each page of your submission containing CBI as ''PROPIN.'' The FAA will treat such marked submissions as confidential under the FOIA, and they will not be placed in the public docket of this NPRM. Submissions containing CBI should be sent to Kathleen Arrigotti, Aerospace Engineer, Large Aircraft Section, International Validation Branch, FAA, 2200 South 216th St., Des Moines, WA 98198; telephone and fax 206–231–3218; *Kathleen.Arrigotti@faa.gov.* Any commentary that the FAA receives which is not specifically designated as CBI will be placed in the public docket for this rulemaking.

Background

The EASA, which is the Technical Agent for the Member States of the European Union, has issued EASA AD 2020–0268, dated December 4, 2020 (EASA AD 2020–0268) (also referred to after this as the Mandatory Continuing Airworthiness Information, or the MCAI), to correct an unsafe condition for all Airbus SAS Model A350–941 and –1041 airplanes. EASA AD 2020–0268 refers to Airbus A350 Airworthiness Limitations Section (ALS), Part 5, ''Fuel Airworthiness Limitations (FAL),'' Revision 04, dated May 29, 2020, and Airbus A350 ALS Part 5, ''Fuel Airworthiness Limitations (FAL),'' Variation 4.1, dated September 15, 2020. Airplanes with an original airworthiness certificate or original export certificate of airworthiness issued after September 15, 2020, must comply with the airworthiness limitations specified as part of the approved type design and referenced on the type certificate data sheet; this AD therefore does not include those airplanes in the applicability. You may examine the MCAI in the AD docket on the internet at *https://www.regulations.gov* by searching for and locating Docket No. FAA–2021–0193.

This proposed AD was prompted by a determination that new or more restrictive airworthiness limitations are necessary. The FAA is proposing this AD to address the overheat failure mode of the hydraulic engine-driven pump (EDP), which may cause a fast temperature rise of the hydraulic fluid, and, if combined with an inoperative fuel tank inerting system, could lead to an uncontrolled overheat of the hydraulic fluid, possibly resulting in ignition of the fuel-air mixture of the affected fuel tank. See the MCAI for additional background information.

Related Service Information Under 1 CFR Part 51

EASA AD 2020–0268 describes new or more restrictive airworthiness limitations related to fuel tank ignition prevention and fuel tank flammability reduction.

This proposed AD would also require accomplishing a certain airworthiness limitation using the following service information. These documents are distinct since they apply to different airplane models.

- Airbus Service Bulletin A350–29–P025, dated August 10, 2020.
- Airbus Service Bulletin A350–29–P027, dated November 24, 2020.
- Airbus Service Bulletin A350–29–P029, dated December 16, 2020.

The service information describes procedures for an update of the hydraulic monitoring system to include additional redundancy (*i.e.,* modifying the case-drain filter manifolds by installing new dual temperature sensors on the hydraulic EDP). This service information is reasonably available because the interested parties have

access to it through their normal course of business or by the means identified in the **ADDRESSES** section.

FAA's Determination and Requirements of This Proposed AD

This product has been approved by the aviation authority of another country, and is approved for operation in the United States. Pursuant to the FAA's bilateral agreement with the State of Design Authority, the FAA has been notified of the unsafe condition described in the MCAI and service information referenced above. The FAA is proposing this AD because the FAA has evaluated all pertinent information and determined an unsafe condition exists and is likely to exist or develop on other products of the same type design.

Proposed Requirements of This NPRM

This proposed AD would require revising the existing maintenance or inspection program, as applicable, to incorporate new or more restrictive airworthiness limitations, which are specified in EASA AD 2020–0268 described previously, as incorporated by reference. Any differences with EASA AD 2020–0268 are identified as exceptions in the regulatory text of this AD. This proposed AD would require accomplishing a certain airworthiness limitation using the Airbus service information described previously.

This proposed AD would require revisions to certain operator maintenance documents to include new actions (*e.g.,* inspections) and Critical Design Configuration Control Limitations (CDCCLs). Compliance with these actions and CDCCLs is required by 14 CFR 91.403(c). For airplanes that have been previously modified, altered, or repaired in the areas addressed by this proposed AD, the operator may not be able to accomplish the actions described in the revisions. In this situation, to comply with 14 CFR 91.403(c), the operator must request approval for an alternative method of compliance according to paragraph (j)(1) of this proposed AD.

Explanation of Required Compliance Information

In the FAA's ongoing efforts to improve the efficiency of the AD process, the FAA initially worked with Airbus and EASA to develop a process to use certain EASA ADs as the primary source of information for compliance with requirements for corresponding FAA ADs. The FAA has since coordinated with other manufacturers and civil aviation authorities (CAAs) to use this process. As a result, EASA AD 2020–0268 will be incorporated by reference in the FAA final rule. This proposed AD would, therefore, require compliance with EASA AD 2020–0268 in its entirety, through that incorporation, except for any differences identified as exceptions in the regulatory text of this proposed AD. Using common terms that are the same as the heading of a particular section in the EASA AD does not mean that operators need comply only with that section. For example, where the AD requirement refers to ''all required actions and compliance times,'' compliance with this AD requirement is not limited to the section titled ''Required Action(s) and Compliance Time(s)'' in the EASA AD.

Service information specified in EASA AD 2020–0268 that is required for compliance with EASA AD 2020–0268 will be available on the internet at *https://www.regulations.gov* by searching for and locating Docket No. FAA–2021–0193 after the FAA final rule is published.

Airworthiness Limitation ADs Using the New Process

The FAA's process of incorporating by reference MCAI ADs as the primary source of information for compliance with corresponding FAA ADs has been limited to certain MCAI ADs (primarily those with service bulletins as the primary source of information for accomplishing the actions required by the FAA AD). However, the FAA is now expanding the process to include MCAI ADs that require a change to airworthiness limitation documents, such as airworthiness limitation sections.

For these ADs that incorporate by reference an MCAI AD that changes airworthiness limitations, the FAA requirements are unchanged. Operators must revise the existing maintenance or inspection program, as applicable, to incorporate the information specified in the new airworthiness limitation document. The airworthiness limitations must be followed according to 14 CFR 91.403(c) and 91.409(e).

The previous format of the airworthiness limitation ADs included a paragraph that specified that no alternative actions (*e.g.,* inspections), intervals, or CDCCLs may be used unless the actions, intervals, and CDCCLs are approved as an alternative method of compliance (AMOC) in accordance with the procedures specified in the AMOCs paragraph under ''Other FAA Provisions.'' This new format includes a ''New Provisions for Alternative Actions, Intervals, and CDCCLs'' paragraph that does not specifically refer to AMOCs, but operators may still request an AMOC to use an alternative action, interval, or CDCCL.

Costs of Compliance

The FAA estimates that this proposed AD affects 15 airplanes of U.S. registry. The FAA estimates the following costs to comply with this proposed AD:

The FAA has determined that revising the maintenance or inspection program takes an average of 90 work-hours per operator, although the agency recognizes that this number may vary from operator to operator. Since operators incorporate maintenance or inspection program changes for their affected fleet(s), the FAA has determined that a per-operator estimate is more accurate than a per-airplane estimate. Therefore, the agency estimates the average total cost per operator to be $7,650 (90 work-hours × $85 per work-hour).

ESTIMATED COSTS FOR REQUIRED ACTIONS

Labor cost	Parts cost	Cost per product	Cost on U.S. operators
Up to 510 work-hours × $85 per hour = Up to $43,350.	Up to $29,320	Up to $72,670	Up to $1,090,050.

According to the manufacturer, some or all of the costs of this proposed AD may be covered under warranty, thereby reducing the cost impact on affected operators. The FAA does not control warranty coverage for affected operators. As a result, the FAA has included all known costs in the cost estimate.

Authority for This Rulemaking

Title 49 of the United States Code specifies the FAA's authority to issue rules on aviation safety. Subtitle I,

section 106, describes the authority of the FAA Administrator. Subtitle VII: Aviation Programs, describes in more detail the scope of the Agency's authority.

The FAA is issuing this rulemaking under the authority described in Subtitle VII, Part A, Subpart III, Section 44701: General requirements. Under that section, Congress charges the FAA with promoting safe flight of civil aircraft in air commerce by prescribing regulations for practices, methods, and procedures the Administrator finds necessary for safety in air commerce. This regulation is within the scope of that authority because it addresses an unsafe condition that is likely to exist or develop on products identified in this rulemaking action.

Regulatory Findings

The FAA determined that this proposed AD would not have federalism implications under Executive Order 13132. This proposed AD would not have a substantial direct effect on the States, on the relationship between the national Government and the States, or on the distribution of power and responsibilities among the various levels of government.

For the reasons discussed above, I certify this proposed regulation:

(1) Is not a ''significant regulatory action'' under Executive Order 12866,

(2) Would not affect intrastate aviation in Alaska, and

(3) Would not have a significant economic impact, positive or negative, on a substantial number of small entities under the criteria of the Regulatory Flexibility Act.

List of Subjects in 14 CFR Part 39

Air transportation, Aircraft, Aviation safety, Incorporation by reference, Safety.

The Proposed Amendment

Accordingly, under the authority delegated to me by the Administrator, the FAA proposes to amend 14 CFR part 39 as follows:

PART 39—AIRWORTHINESS DIRECTIVES

■ 1. The authority citation for part 39 continues to read as follows:

Authority: 49 U.S.C. 106(g), 40113, 44701.

§ 39.13 [Amended]

■ 2. The FAA amends § 39.13 by adding the following new airworthiness directive:

Airbus SAS: Docket No. FAA–2021–0193; Project Identifier MCAI–2020–01612–T.

(a) Comments Due Date

The FAA must receive comments on this airworthiness directive (AD) action by May 10, 2021.

(b) Affected ADs

None.

(c) Applicability

This AD applies to Airbus SAS Model A350–941 and –1041 airplanes, certificated in any category; with an original airworthiness certificate or original export certificate of airworthiness issued after September 15, 2020.

(d) Subject

Air Transport Association (ATA) of America Code 05, Time Limits/Maintenance Checks; 29, Hydraulic power.

(e) Reason

This AD was prompted by a determination that new or more restrictive airworthiness limitations are necessary. The FAA is issuing this AD to address the overheat failure mode of the hydraulic engine-driven pump, which may cause a fast temperature rise of the hydraulic fluid, and, if combined with an inoperative fuel tank inerting system, could lead to an uncontrolled overheat of the hydraulic fluid, possibly resulting in ignition of the fuel-air mixture of the affected fuel tank.

(f) Compliance

Comply with this AD within the compliance times specified, unless already done.

(g) Requirements

Except as specified in paragraph (h) of this AD: Comply with all required actions and compliance times specified in, and in accordance with, European Union Aviation Safety Agency (EASA) AD 2020–0268, dated December 4, 2020 (EASA AD 2020–0268).

(h) Exceptions to EASA AD 2020–0268

(1) Where Section 6 of the service information referenced in EASA AD 2020–0268 specifies to update the hydraulic monitoring system ''to include additional redundancy to be installed (MOD 114073 and MOD 114075 OR 114531 and MOD 114075 OR MOD 114533 and MOD 114075 OR MOD 114535 and MOD 114075),'' this AD requires that the update of the hydraulic monitoring system be accomplished using the method of compliance specified in paragraphs (h)(1)(i) through (iv) of this AD, as applicable.

(i) For Model A350–941 airplanes identified in Airbus Service Bulletin A350–29–P025 (MOD 114531 and MOD 114075): The modification must be done in accordance with paragraphs 3.C., 3.D., and 3.E., of the Accomplishment Instructions of Airbus Service Bulletin A350–29–P025, dated August 10, 2020.

(ii) For Model A350–941 airplanes identified in Airbus Service Bulletin A350–29–P027 (MOD 114533 and MOD 114075): The modification must be done in accordance with paragraphs 3.C., 3.D., and 3.E., of the Accomplishment Instructions of Airbus Service Bulletin A350–29–P027, dated November 24, 2020.

(iii) For Model A350–941 airplanes identified in Airbus Service Bulletin A350–29–P029 (MOD 114535 and MOD 114075): The modification must be done in accordance with paragraphs 3.C., 3.D., and 3.E., of the Accomplishment Instructions of Airbus Service Bulletin A350–29–P029, dated December 16, 2020.

(iv) For Model A350–941 airplanes not identified in paragraphs (h)(1)(i) through (iii) of this AD, and without MOD 114073 and 114075 installed in production: The modification must be done using a method approved by the Manager, Large Aircraft Section, International Validation Branch, FAA; or EASA; or Airbus SAS's EASA Design Organization Approval (DOA). If approved by the DOA, the approval must include the DOA-authorized signature.

(2) Where EASA AD 2020–0268 refers to its effective date, this AD requires using the effective date of this AD.

(3) The requirements specified in paragraphs (1) and (2) of EASA AD 2020–0268 do not apply to this AD.

(4) Paragraph (3) of EASA AD 2020–0268 specifies revising ''the approved AMP'' within 12 months after its effective date, but this AD requires revising the existing maintenance or inspection program, as applicable, within 90 days after the effective date of this AD.

(5) The initial compliance time for doing the tasks specified in paragraph (3) of EASA AD 2020–0268 is at the applicable ''thresholds'' as incorporated by the requirements of paragraph (3) of EASA AD 2020–0268, or within 90 days after the effective date of this AD, whichever occurs later.

(6) The provisions specified in paragraphs (4) and (5) of EASA AD 2020–0268 do not apply to this AD.

(7) The ''Remarks'' section of EASA AD 2020–0268 does not apply to this AD.

(i) Provisions for Alternative Actions, Intervals, and Critical Design Configuration Control Limitations (CDCCLs)

After the existing maintenance or inspection program has been revised as required by paragraph (g) of this AD, no alternative actions (*e.g.,* inspections), intervals, and CDCCLs are allowed unless they are approved as specified in the provisions of the ''Ref. Publications'' section of EASA AD 2020–0268.

(j) Other FAA AD Provisions

The following provisions also apply to this AD:

(1) *Alternative Methods of Compliance (AMOCs):* The Manager, Large Aircraft Section, International Validation Branch, FAA, has the authority to approve AMOCs for this AD, if requested using the procedures found in 14 CFR 39.19. In accordance with 14 CFR 39.19, send your request to your principal inspector or local Flight Standards District Office, as appropriate. If sending information directly to the Large Aircraft Section, International Validation Branch, send it to the attention of the person identified in paragraph (k)(2) of this AD. Information may be emailed to: *9-AVS-AIR-730-AMOC@faa.gov.* Before using any

approved AMOC, notify your appropriate principal inspector, or lacking a principal inspector, the manager of the local flight standards district office/certificate holding district office.

(2) *Contacting the Manufacturer:* For any requirement in this AD to obtain instructions from a manufacturer, the instructions must be accomplished using a method approved by the Manager, Large Aircraft Section, International Validation Branch, FAA; or EASA; or Airbus SAS's EASA DOA. If approved by the DOA, the approval must include the DOA-authorized signature.

(3) *Required for Compliance (RC):* Except as required by paragraph (j)(2) of this AD, if any service information contains procedures or tests that are identified as RC, those procedures and tests must be done to comply with this AD; any procedures or tests that are not identified as RC are recommended. Those procedures and tests that are not identified as RC may be deviated from using accepted methods in accordance with the operator's maintenance or inspection program without obtaining approval of an AMOC, provided the procedures and tests identified as RC can be done and the airplane can be put back in an airworthy condition. Any substitutions or changes to procedures or tests identified as RC require approval of an AMOC.

(k) Related Information

(1) For information about EASA AD 2020–0268, contact EASA, Konrad-Adenauer-Ufer 3, 50668 Cologne, Germany; telephone +49 221 8999 000; email *ADs@easa.europa.eu;* internet *www.easa.europa.eu.* You may find this EASA AD on the EASA website at *https://ad.easa.europa.eu.* For Airbus SAS service information identified in this proposed AD, contact Airbus SAS, Airworthiness Office—EAL, Rond-Point Emile Dewoitine No: 2, 31700 Blagnac Cedex, France; telephone +33 5 61 93 36 96; fax +33 5 61 93 45 80; email *continued-airworthiness.a350@airbus.com;* internet *http://www.airbus.com.* You may view this material at the FAA, Airworthiness Products Section, Operational Safety Branch, 2200 South 216th St., Des Moines, WA. For information on the availability of this material at the FAA, call 206–231–3195. This material may be found in the AD docket on the internet at *https://www.regulations.gov* by searching for and locating Docket No. FAA–2021–0193.

(2) For more information about this AD, contact Kathleen Arrigotti, Aerospace Engineer, Large Aircraft Section, International Validation Branch, FAA, 2200 South 216th St., Des Moines, WA 98198; telephone and fax 206–231–3218; *Kathleen.Arrigotti@faa.gov.*

Issued on March 18, 2021.

Lance T. Gant,

Director, Compliance & Airworthiness Division, Aircraft Certification Service.

[FR Doc. 2021–05948 Filed 3–25–21; 8:45 am]

BILLING CODE 4910–13–P

DEPARTMENT OF TRANSPORTATION

Federal Aviation Administration

14 CFR Part 39

[Docket No. FAA–2021–0196; Project Identifier 2018–SW–021–AD]

RIN 2120–AA64

Airworthiness Directives; Airbus Helicopters Deutschland GmbH Helicopters

AGENCY: Federal Aviation Administration (FAA), DOT.

ACTION: Notice of proposed rulemaking (NPRM).

SUMMARY: The FAA proposes to adopt a new airworthiness directive (AD) for Airbus Helicopters Deutschland GmbH Model MBB–BK 117 A–1, MBB–BK 117 A–3, MBB–BK 117 A–4, MBB–BK 117 B–1, MBB–BK 117 B–2, and MBB–BK 117 C–1 helicopters. This proposed AD was prompted by an analysis of the main rotor (M/R) blade loop area. This proposed AD would require repetitive inspections of certain M/R blade thimble areas and corrective actions if necessary, as specified in a European Aviation Safety Agency (now European Union Aviation Safety Agency) (EASA) AD, which is proposed for incorporation by reference (IBR). The FAA is proposing this AD to address the unsafe condition on these products.

DATES: The FAA must receive comments on this proposed AD by May 10, 2021.

ADDRESSES: You may send comments, using the procedures found in 14 CFR 11.43 and 11.45, by any of the following methods:

- *Federal eRulemaking Portal:* Go to *https://www.regulations.gov.* Follow the instructions for submitting comments.
- *Fax:* (202) 493–2251.
- *Mail:* U.S. Department of Transportation, Docket Operations, M–30, West Building Ground Floor, Room W12–140, 1200 New Jersey Avenue SE, Washington, DC 20590.
- *Hand Delivery:* Deliver to Mail address above between 9 a.m. and 5 p.m., Monday through Friday, except Federal holidays.

For material that is proposed for IBR in this AD, contact EASA, Konrad-Adenauer-Ufer 3, 50668 Cologne, Germany; telephone +49 221 8999 000; email *ADs@easa.europa.eu;* internet *www.easa.europa.eu.* You may find this material on the EASA website at *https://ad.easa.europa.eu.* You may view this material at the FAA, Office of the Regional Counsel, Southwest Region, 10101 Hillwood Pkwy., Room 6N–321, Fort Worth, TX 76177. For information on the availability of this material at the FAA, call (817) 222–5110. It is also available in the AD docket on the internet at *https://www.regulations.gov* by searching for and locating Docket No. FAA–2021–0196.

Examining the AD Docket

You may examine the AD docket on the internet at *https://www.regulations.gov* by searching for and locating Docket No. FAA–2021–0196; or in person at Docket Operations between 9 a.m. and 5 p.m., Monday through Friday, except Federal holidays. The AD docket contains this NPRM, any comments received, and other information. The street address for Docket Operations is listed above. Comments will be available in the AD docket shortly after receipt.

FOR FURTHER INFORMATION CONTACT: Kathleen Arrigotti, Aerospace Engineer, Large Aircraft Section, International Validation Branch, FAA, 2200 South 216th St., Des Moines, WA; telephone (206) 231–3218; email *kathleen.arrigotti@faa.gov.*

SUPPLEMENTARY INFORMATION:

Comments Invited

The FAA invites you to send any written relevant data, views, or arguments about this proposal. Send your comments to an address listed under **ADDRESSES**. Include ''Docket No. FAA–2021–0196; Product Identifier 2018–SW–021–AD'' at the beginning of your comments. The most helpful comments reference a specific portion of the proposal, explain the reason for any recommended change, and include supporting data. The FAA will consider all comments received by the closing date and may amend this proposal because of those comments.

Except for Confidential Business Information (CBI) as described in the following paragraph, and other information as described in 14 CFR 11.35, the FAA will post all comments received, without change, to *https://www.regulations.gov,* including any personal information you provide. The agency will also post a report summarizing each substantive verbal contact received about this proposal.

Confidential Business Information

CBI is commercial or financial information that is both customarily and actually treated as private by its owner. Under the Freedom of Information Act (FOIA) (5 U.S.C. 552), CBI is exempt from public disclosure. If your comments responsive to this NPRM contain commercial or financial information that is customarily treated as private, that you actually treat as

private, and that is relevant or responsive to this NPRM, it is important that you clearly designate the submitted comments as CBI. Please mark each page of your submission containing CBI as ''PROPIN.'' The FAA will treat such marked submissions as confidential under the FOIA, and they will not be placed in the public docket of this NPRM. Submissions containing CBI should be sent to Kathleen Arrigotti, Aerospace Engineer, Large Aircraft Section, International Validation Branch, FAA, 2200 South 216th St., Des Moines, WA; telephone (206) 231–3218; email *kathleen.arrigotti@faa.gov.* Any commentary that the FAA receives that is not specifically designated as CBI will be placed in the public docket for this rulemaking.

Discussion

The EASA, which is the Technical Agent for the Member States of the European, has issued EASA AD 2018–0061, dated March 20, 2018 (EASA AD 2018–0061), to correct an unsafe condition for Airbus Helicopters Deutschland GmbH (AHD) (formerly Eurocopter Deutschland GmbH, Eurocopter Hubschrauber GmbH, Messerschmitt-Bölkow-Blohm GmbH), Airbus Helicopters Inc. (formerly American Eurocopter LLC) Model MBB–BK117 A–1, MBB–BK117 A–3, MBB–BK117 A–4, MBB–BK117 B–1, MBB–BK117 B–2, and MBB–BK117 C–1 helicopters, all serial numbers.

This proposed AD was prompted by new test results from an analysis of the M/R blade loop area, which revealed that certain M/R blade thimbles require reduced inspection intervals. The FAA is proposing this AD to address composite failure of the M/R blades, resulting in loss of control of the helicopter. See the EASA AD for additional background information.

Related Service Information Under 1 CFR Part 51

EASA AD 2018–0061 specifies compliance intervals to repetitively inspect certain M/R blades, with a blade sweep angle of 1 degree, for cracks and resin chippings in the area of the greater thimble radius and corrective actions, if there is a crack or anomaly. EASA AD 2018–0061 also specifies compliance intervals to repetitively inspect certain M/R blades, with a blade sweep angle of 0 degrees, for cracks and bulging in the teflon foil in the area of the greater thimble radius and corrective actions, if there is a crack or bulge. Corrective actions include dispatching the M/R blades to an authorized repair station, as required.

This material is reasonably available because the interested parties have access to it through their normal course of business or by the means identified in the **ADDRESSES** section.

FAA's Determination and Requirements of This Proposed AD

These products have been approved by the aviation authority of another country, and are approved for operation in the United States. Pursuant to the bilateral agreement with the State of Design Authority, the FAA has been notified of the unsafe condition described in the EASA AD referenced above. The FAA is proposing this AD after evaluating all the relevant information and determining the unsafe condition described previously is likely to exist or develop in other products of the same type designs.

Proposed AD Requirements

This proposed AD would require accomplishing the actions specified in EASA AD 2018–0061 described previously, as incorporated by reference, except for any differences identified as exceptions in the regulatory text of this proposed AD and except as discussed under ''Differences Between this Proposed AD and the EASA AD.''

Explanation of Required Compliance Information

In the FAA's ongoing efforts to improve the efficiency of the AD process, the FAA initially worked with Airbus and EASA to develop a process to use certain EASA ADs as the primary source of information for compliance with requirements for corresponding FAA ADs. The FAA has since coordinated with other manufacturers and civil aviation authorities (CAAs) to use this process. As a result, EASA AD 2018–0061 will be incorporated by reference in the FAA final rule. This proposed AD would, therefore, require compliance with EASA AD 2018–0061 in its entirety, through that incorporation, except for any differences identified as exceptions in the regulatory text of this proposed AD. Using common terms that are the same as the heading of a particular section in the EASA AD does not mean that operators need comply only with that section. For example, where the AD requirement refers to ''all required actions and compliance times,'' compliance with this AD requirement is not limited to the section titled ''Required Action(s) and Compliance Time(s)'' in the EASA AD. Service information specified in EASA AD 2018–0061 that is required for compliance with EASA AD 2018–0061 will be available on the internet at *https://www.regulations.gov* by searching for and locating Docket No. FAA–2021–0196 after the FAA final rule is published.

Differences Between This Proposed AD and the EASA AD

The EASA AD applies to Model MBB–BK117 A–1, MBB–BK117 A–3, MBB–BK117 A–4, MBB–BK117 B–1, MBB–BK117 B–2 and MBB–BK117 C–1 helicopters, whereas this proposed AD would apply to Model MBB–BK 117 A–1, MBB–BK 117 A–3, MBB–BK 117 A–4, MBB–BK 117 B–1, MBB–BK 117 B–2, and MBB–BK 117 C–1 helicopters with certain M/R blades installed instead. The service information required by the EASA AD requires accomplishment of certain corrective action by ''ECD'' or an authorized service or repair station, whereas this proposed AD would require performing the corrective action in accordance with FAA-approved procedures, instead. The EASA AD requires revising the Aircraft Maintenance Program (AMP), whereas this proposed AD would not. The EASA AD allows a tolerance to compliance times, whereas this proposed AD would not.

Costs of Compliance

The FAA estimates that this proposed AD affects 216 helicopters of U.S. Registry. Labor rates are estimated at $85 per work-hour. Based on these numbers, the FAA estimates that operators may incur the following costs in order to comply with this proposed AD.

Inspecting an M/R blade thimble area would take about 1 work-hour for an estimated cost of about $85 per M/R blade thimble, per inspection cycle.

Repairing or replacing an M/R blade could take up to about 20 work-hour(s) and parts could cost up to about $23,100 for an estimated cost of up to $24,800 per blade.

Authority for This Rulemaking

Title 49 of the United States Code specifies the FAA's authority to issue rules on aviation safety. Subtitle I, section 106, describes the authority of the FAA Administrator. Subtitle VII: Aviation Programs, describes in more detail the scope of the Agency's authority.

The FAA is issuing this rulemaking under the authority described in Subtitle VII, Part A, Subpart III, Section 44701: General requirements. Under that section, Congress charges the FAA with promoting safe flight of civil aircraft in air commerce by prescribing

regulations for practices, methods, and procedures the Administrator finds necessary for safety in air commerce. This regulation is within the scope of that authority because it addresses an unsafe condition that is likely to exist or develop on products identified in this rulemaking action.

Regulatory Findings

The FAA determined that this proposed AD would not have federalism implications under Executive Order 13132. This proposed AD would not have a substantial direct effect on the States, on the relationship between the national Government and the States, or on the distribution of power and responsibilities among the various levels of government.

For the reasons discussed above, I certify this proposed regulation:

(1) Is not a ''significant regulatory action'' under Executive Order 12866,

(2) Will not affect intrastate aviation in Alaska, and

(3) Will not have a significant economic impact, positive or negative, on a substantial number of small entities under the criteria of the Regulatory Flexibility Act.

List of Subjects in 14 CFR Part 39

Air transportation, Aircraft, Aviation safety, Incorporation by reference, Safety.

The Proposed Amendment

Accordingly, under the authority delegated to me by the Administrator, the FAA proposes to amend 14 CFR part 39 as follows:

PART 39—AIRWORTHINESS DIRECTIVES

■ 1. The authority citation for part 39 continues to read as follows:

Authority: 49 U.S.C. 106(g), 40113, 44701.

§ 39.13 [Amended]

■ 2. The FAA amends § 39.13 by adding the following new airworthiness directive:

Airbus Helicopters Deutschland GmbH: Docket No. FAA–2021–0196; Project Identifier 2018–SW–021–AD.

(a) Comments Due Date

The FAA must receive comments by May 10, 2021.

(b) Affected Airworthiness Directives (ADs)

None.

(c) Applicability

This AD applies to Airbus Helicopters Deutschland GmbH Model MBB–BK 117 A–1, MBB–BK 117 A–3, MBB–BK 117 A–4, MBB–BK 117 B–1, MBB–BK 117 B–2, and MBB–BK 117 C–1 helicopters, certificated in any category, with an ''affected 'angle 0' parts'' or ''affected 'angle 1' parts'' installed, as identified in European Aviation Safety Agency (now European Union Aviation Safety Agency) (EASA) AD 2018–0061, dated March 20, 2018 (EASA AD 2018–0061).

(d) Subject

Joint Aircraft System Component (JASC) Code: 6200, Main Rotor System.

(e) Reason

This AD was prompted by new test results from a composite analysis of the main rotor (M/R) blade loop area, which revealed that certain M/R blade thimbles require reduced inspection intervals. The FAA is issuing this AD to address composite failure of an M/R blade, which if not addressed could result in subsequent loss of control of the helicopter.

(f) Compliance

Comply with this AD within the compliance times specified, unless already done.

(g) Requirements

Except as specified in paragraph (h) of this AD: Comply with all required actions and compliance times specified in, and in accordance with, EASA AD 2018–0061.

(h) Exceptions to EASA AD 2018–0061

(1) Where EASA AD 2018–0061 refers to its effective date, this AD requires using the effective date of this AD.

(2) Where EASA AD 2018–0061 refers to flight hours, this AD requires using hours time-in-service (TIS).

(3) Where Table 1, Table 2, and Note 2 of EASA AD 2018–0061 specify inspection thresholds, intervals, and a non-cumulative compliance time tolerance of 10% for certain required compliance times, this AD requires accomplishing those requirements, as follows:

(i) For helicopters with an ''affected 'angle 0' parts,'' the compliance time is before accumulating 660 total hours TIS on the affected part or within 100 hours TIS after the effective date of this AD, whichever occurs later, and without accumulating 1,600 total hours TIS on the affected part. Thereafter, the compliance time is at intervals not to exceed 330 hours TIS.

(ii) For helicopters with an ''affected 'angle 1' parts,'' the compliance time is before accumulating 110 total hours TIS on the affected part or within 50 hours TIS after the effective date of this AD, whichever occurs later, and without accumulating 950 total hours TIS on the affected part. Thereafter, the compliance time is at intervals not to exceed 110 hours TIS.

(iii) For helicopters specified in paragraph (c) of this AD, Note 1 of EASA AD 2018–0061 specifies accumulated FH as, ''Unless otherwise specified, the FH specified in Table 2 of this AD are those accumulated since the previous M/R blade thimble inspection.'' This AD requires intervals thereafter to be accumulated since accomplishment of paragraph (g) of this AD.

(4) While paragraph (5) and Note 3 of EASA AD 2018–0061 specify revising the Aircraft Maintenance Program (AMP), this AD does not require this action.

(5) Where the service information referenced in EASA AD 2018–0061 specifies accomplishment of certain corrective action by ''ECD'' or an authorized service or repair station, this AD requires the corrective actions to be performed by a qualified mechanic.

(6) Where the service information referenced in EASA AD 2018–0061 specifies contacting ''ECD'' or an authorized service or repair station, this AD requires performing the corrective action in accordance with FAA-approved procedures.

(7) The ''Remarks'' section of EASA AD 2018–0061 does not apply to this AD.

(i) Alternative Methods of Compliance (AMOCs)

(1) The Manager, International Validation Branch, FAA, has the authority to approve AMOCs for this AD, if requested using the procedures found in 14 CFR 39.19. In accordance with 14 CFR 39.19, send your request to your principal inspector or local Flight Standards District Office, as appropriate. If sending information directly to the manager of the International Validation Branch, send it to the attention of the person identified in paragraph (j)(2) of this AD. Information may be emailed to: *9-AVS-AIR-730-AMOC@faa.gov.*

(2) Before using any approved AMOC, notify your appropriate principal inspector, or lacking a principal inspector, the manager of the local flight standards district office/certificate holding district office.

(j) Related Information

(1) For EASA AD 2018–0061, contact the EASA, Konrad-Adenauer-Ufer 3, 50668 Cologne, Germany; telephone +49 221 8999 000; email *ADs@easa.europa.eu;* internet *www.easa.europa.eu.* You may find this EASA AD on the EASA website at *https://ad.easa.europa.eu.* You may view this material at the FAA, Office of the Regional Counsel, Southwest Region, 10101 Hillwood Pkwy., Room 6N–321, Fort Worth, TX 76177. For information on the availability of this material at the FAA, call (817) 222–5110. This material may be found in the AD docket on the internet at *https://www.regulations.gov* by searching for and locating Docket No. FAA–2021–0196.

(2) For more information about this AD, contact Kathleen Arrigotti, Aerospace Engineer, Large Aircraft Section, International Validation Branch, FAA, 2200 South 216th St., Des Moines, WA; telephone (206) 231–3218; email kathleen.arrigotti@faa.gov.

Issued on March 20, 2021.

Gaetano A. Sciortino,

Deputy Director for Strategic Initiatives, Compliance & Airworthiness Division, Aircraft Certification Service.

[FR Doc. 2021–06214 Filed 3–25–21; 8:45 am]

BILLING CODE 4910–13–P

DEPARTMENT OF TRANSPORTATION

Federal Aviation Administration

14 CFR Part 39

[Docket No. FAA–2020–1074; Project Identifier MCAI–2020–01257–A]

RIN 2120–AA64

Airworthiness Directives; Pilatus Aircraft Ltd. Airplanes

AGENCY: Federal Aviation Administration (FAA), DOT.

ACTION: Notice of proposed rulemaking (NPRM).

SUMMARY: The FAA proposes to adopt a new airworthiness directive (AD) for certain Pilatus Aircraft Ltd. (Pilatus) Model PC–24 airplanes. This proposed AD results from mandatory continuing airworthiness information (MCAI) originated by an aviation authority of another country to identify and correct an unsafe condition on an aviation product. The MCAI identifies the unsafe condition as the engine attachment hardware not conforming to the approved design, which could affect the structural integrity of the airplane. This proposed AD would require inspecting the engine attachment hardware for missing washers and loose nuts and taking corrective actions as necessary. The FAA is proposing this AD to address the unsafe condition on these products.

DATES: The FAA must receive comments on this proposed AD by May 10, 2021.

ADDRESSES: You may send comments, using the procedures found in 14 CFR 11.43 and 11.45, by any of the following methods:

- *Federal eRulemaking Portal:* Go to *https://www.regulations.gov.* Follow the instructions for submitting comments.
- *Fax:* (202) 493–2251.
- *Mail:* U.S. Department of Transportation, Docket Operations, M–30, West Building Ground Floor, Room W12–140, 1200 New Jersey Avenue SE, Washington, DC 20590.
- *Hand Delivery:* Deliver to Mail address above between 9 a.m. and 5 p.m., Monday through Friday, except Federal holidays.

For service information identified in this NPRM, contact Pilatus Aircraft Ltd., CH–6371, Stans, Switzerland; phone: +41 848 24 7 365; email: *techsupport.ch@pilatus-aircraft.com*; website: *https://www.pilatus-aircraft.com/.* You may view this service information at the FAA, Airworthiness Products Section, Operational Safety Branch, 901 Locust, Kansas City, MO 64106. For information on the availability of this material at the FAA, call (816) 329–4148. It is also available at *https://www.regulations.gov* by searching for and locating Docket No. FAA–2020–1074.

Examining the AD Docket

You may examine the AD docket at *https://www.regulations.gov* by searching for and locating Docket No. FAA–2020–1074; or in person at Docket Operations between 9 a.m. and 5 p.m., Monday through Friday, except Federal holidays. The AD docket contains this NPRM, any comments received, and other information. The street address for Docket Operations is listed above.

FOR FURTHER INFORMATION CONTACT: Doug Rudolph, Aviation Safety Engineer, FAA, General Aviation & Rotorcraft Section, International Validation Branch, 901 Locust, Room 301, Kansas City, MO 64106; phone: (816) 329–4059; fax: (816) 329–4090; email: *doug.rudolph@faa.gov.*

SUPPLEMENTARY INFORMATION:

Comments Invited

The FAA invites you to send any written relevant data, views, or arguments about this proposal. Send your comments to an address listed under **ADDRESSES**. Include ''Docket No. FAA–2020–1074; Project Identifier MCAI–2020–01257–A'' at the beginning of your comments. The most helpful comments reference a specific portion of the proposal, explain the reason for any recommended change, and include supporting data. The FAA will consider all comments received by the closing date and may amend this proposal because of those comments.

Except for Confidential Business Information (CBI) as described in the following paragraph, and other information as described in 14 CFR 11.35, the FAA will post all comments received, without change, to *https://www.regulations.gov,* including any personal information you provide. The agency will also post a report summarizing each substantive verbal contact received about this NPRM.

Confidential Business Information

CBI is commercial or financial information that is both customarily and actually treated as private by its owner. Under the Freedom of Information Act (FOIA) (5 U.S.C. 552), CBI is exempt from public disclosure. If your comments responsive to this NPRM contain commercial or financial information that is customarily treated as private, that you actually treat as private, and that is relevant or responsive to this NPRM, it is important that you clearly designate the submitted comments as CBI. Please mark each page of your submission containing CBI as ''PROPIN.'' The FAA will treat such marked submissions as confidential under the FOIA, and they will not be placed in the public docket of this NPRM. Submissions containing CBI should be sent to Doug Rudolph, Aviation Safety Engineer, FAA, General Aviation & Rotorcraft Section, International Validation Branch, 901 Locust, Room 301, Kansas City, MO 64106. Any commentary that the FAA receives which is not specifically designated as CBI will be placed in the public docket for this rulemaking.

Background

The European Union Aviation Safety Agency (EASA), which is the Technical Agent for the Member States of the European Union, has issued EASA AD 2020–0194, dated September 8, 2020 (referred to after this as ''the MCAI''), to address an unsafe condition on certain serial-numbered Pilatus Model PC–24 airplanes. The MCAI states:

> During a scheduled maintenance inspection, the engine attachment hardware of a PC–24 airplane was found not to conform to the approved design. A washer was missing beneath each of the four mating bolt heads on the rear engine beam. In addition, some of the keeper fitting attachment bolts on the LH/RH middle inner nacelle were found with loose nuts. It was also determined that other aeroplanes may have the same non-conformities.
>
> This condition, if not detected and corrected, could damage the engine attachment hardware, possibly affecting the structural integrity of the aeroplane.
>
> To address this potential unsafe condition, Pilatus issued the [service bulletin] SB, providing instructions for inspection and corrective action.
>
> For the reason described above, this [EASA] AD requires a one-time inspection for missing washers and loose nuts on the engine attachment hardware and, depending on findings, the accomplishment of applicable corrective action(s).

You may obtain further information by examining the MCAI in the AD docket at *https://www.regulations.gov* by searching for and locating Docket No. FAA–2020–1074.

Related Service Information Under 1 CFR Part 51

The FAA reviewed Pilatus PC–24 Service Bulletin No. 71–001, dated June 30, 2020. This service information specifies procedures for inspecting the engine attachment hardware for loose nuts and missing washers and taking corrective actions depending on findings. This service information is reasonably available because the interested parties have access to it through their normal course of business

or by the means identified in **ADDRESSES**.

FAA's Determination and Requirements of the Proposed AD

This product has been approved by the aviation authority of another country and is approved for operation in the United States. Pursuant to our bilateral agreement with this State of Design Authority, it has notified the FAA of the unsafe condition described in the MCAI and service information referenced above. The FAA is issuing this NPRM after determining the unsafe condition described previously is likely to exist or develop on other products of the same type design.

Costs of Compliance

The FAA estimates that this AD, if adopted as proposed, would affect 34 airplanes of U.S. registry.

The FAA estimates that it would take 2.5 work-hours to do the one-time inspections. The average labor rate is $85 per work-hour.

Based on these figures, the FAA estimates the cost of the proposed AD on U.S. operators would be $7,225 or $212.50 per airplane.

The FAA also estimates that, as on-condition costs, installing missing washers, replacing bolts, and doing an eddy current inspection of the bolt holes would take 4.5 work-hours and require parts costing $200 for a cost of $582.50 per airplane. This estimate assumes replacing all of the rear engine beam attachment bolts and washers and doing an eddy current inspection of all the attachment bolt holes. If the bolt holes are found damaged during the eddy current inspection, the damage will vary considerably from airplane to airplane, and the FAA has no way of estimating a repair cost. In addition, the FAA has no way of determining the number of aircraft that might need these actions.

The FAA has included all known costs in this cost estimate. According to the manufacturer, however, some of the costs of this AD may be covered under warranty, thereby reducing the cost impact on affected operators.

Authority for This Rulemaking

Title 49 of the United States Code specifies the FAA's authority to issue rules on aviation safety. Subtitle I, section 106, describes the authority of the FAA Administrator. Subtitle VII: Aviation Programs, describes in more detail the scope of the Agency's authority.

The FAA is issuing this rulemaking under the authority described in Subtitle VII, Part A, Subpart III, Section 44701: General requirements. Under that section, Congress charges the FAA with promoting safe flight of civil aircraft in air commerce by prescribing regulations for practices, methods, and procedures the Administrator finds necessary for safety in air commerce. This regulation is within the scope of that authority because it addresses an unsafe condition that is likely to exist or develop on products identified in this rulemaking action.

Regulatory Findings

The FAA determined that this proposed AD would not have federalism implications under Executive Order 13132. This proposed AD would not have a substantial direct effect on the States, on the relationship between the national government and the States, or on the distribution of power and responsibilities among the various levels of government.

For the reasons discussed above, I certify this proposed regulation:

(1) Is not a ''significant regulatory action'' under Executive Order 12866,

(2) Would not affect intrastate aviation in Alaska, and

(3) Would not have a significant economic impact, positive or negative, on a substantial number of small entities under the criteria of the Regulatory Flexibility Act.

List of Subjects in 14 CFR Part 39

Air transportation, Aircraft, Aviation safety, Incorporation by reference, Safety.

The Proposed Amendment

Accordingly, under the authority delegated to me by the Administrator, the FAA proposes to amend 14 CFR part 39 as follows:

PART 39—AIRWORTHINESS DIRECTIVES

■ 1. The authority citation for part 39 continues to read as follows:

Authority: 49 U.S.C. 106(g), 40113, 44701.

§ 39.13 [Amended]

2. The FAA amends § 39.13 by adding the following new airworthiness directive:

Pilatus Aircraft Ltd.: Docket No. FAA–2020–1074; Project Identifier MCAI–2020–01257–A.

(a) Comments Due Date

The FAA must receive comments on this airworthiness directive (AD) by May 10, 2021.

(b) Affected ADs

None.

(c) Applicability

This AD applies to Pilatus Aircraft Ltd. Model PC–24 airplanes, serial numbers (S/Ns) 101 through 162, S/N 164, S/N 165, S/N 167, and S/N 168, certificated in any category.

(d) Subject

Joint Aircraft System Component (JASC) Code 7120, Engine Mount Section.

(e) Unsafe Condition

This AD was prompted by mandatory continuing airworthiness information (MCAI) originated by an aviation authority of another country to identify and correct an unsafe condition on an aviation product. The MCAI identifies the unsafe condition as engine attachment hardware not conforming to the approved design. The FAA is issuing this AD to detect and address incorrectly installed attachment hardware in the engine and nacelle area. The unsafe condition, if not addressed, could result in damage to the engine attachment hardware, which may affect the structural integrity of the airplane.

(f) Actions and Compliance

Unless already done, do the actions in paragraphs (f)(1) and (2) of this AD at the next annual inspection after the effective date of this AD or within 11 months after the effective date of this AD, whichever occurs later.

(1) Inspect the left hand (LH) and right hand (RH) middle inner nacelles for loose nuts and correctly install any loose nut before further flight by following section 3.B(1) of the Accomplishment Instructions in Pilatus PC–24 Service Bulletin No. 71–001, dated June 30, 2020 (Pilatus SB 71–001).

(2) Inspect the LH and RH front and rear engine beams for missing washers by following section 3.B(2)(a) through (b) of the Accomplishment Instructions in Pilatus SB 71–001. If there are any missing washers, before further flight, do an eddy current inspection of the bolt holes for damage by following section 3.C of the Accomplishment Instructions in Pilatus SB 71–001. Where Pilatus SB 71–001 specifies obtaining repair instructions from Pilatus, the instructions must be accomplished using a method approved by the Manager, International Validation Branch, FAA; or the European Union Aviation Safety Agency (EASA); or Pilatus's EASA Design Organization Approval (DOA). If approved by the DOA, the approval must include the DOA-authorized signature.

(g) Alternative Methods of Compliance (AMOCs)

(1) The Manager, International Validation Branch, FAA, has the authority to approve AMOCs for this AD, if requested using the procedures found in 14 CFR 39.19. If sending information directly to the manager of the International Validation Branch, send it to the attention of the person identified in Related Information.

(2) Before using any approved AMOC, notify your appropriate principal inspector, or lacking a principal inspector, the manager of the local flight standards district office/certificate holding district office.

(h) Related Information

(1) For more information about this AD, contact Doug Rudolph, Aviation Safety Engineer, FAA, General Aviation & Rotorcraft Section, International Validation Branch, 901 Locust, Room 301, Kansas City, MO 64106; phone: (816) 329–4059; fax: (816) 329–4090; email: *doug.rudolph@faa.gov.*

(2) Refer to MCAI EASA AD 2020–0194, dated September 8, 2020, for more information. You may examine the EASA AD in the AD docket at *https://www.regulations.gov* by searching for and locating it in Docket No. FAA–2020–1074.

(3) For service information identified in this AD, contact Pilatus Aircraft Ltd., CH–6371, Stans, Switzerland; phone: +41 848 24 7 365; email: *techsupport.ch@pilatus-aircraft.com;* website: *http://www.pilatus-aircraft.com/.* You may review this referenced service information at the FAA, Airworthiness Products Section, Operational Safety Branch, 901 Locust, Kansas City, MO 64106. For information on the availability of this material at the FAA, call (816) 329–4148.

Issued on March 17, 2021.

Lance T. Gant,

Director, Compliance & Airworthiness Division, Aircraft Certification Service.

[FR Doc. 2021–05944 Filed 3–25–21; 8:45 am]

BILLING CODE 4910–13–P

DEPARTMENT OF TRANSPORTATION

Federal Aviation Administration

14 CFR Part 39

[Docket No. FAA–2021–0189; Project Identifier AD–2020–00645–R]

RIN 2120–AA64

Airworthiness Directives; Various Restricted Category Helicopters

AGENCY: Federal Aviation Administration (FAA), DOT.

ACTION: Notice of proposed rulemaking (NPRM).

SUMMARY: The FAA proposes to adopt a new airworthiness directive (AD) for type certificated Model UH–1H restricted category helicopters. This proposed AD was prompted by multiple reports of failure of the main driveshaft. This proposed AD would require establishing a life limit for certain main driveshafts, and a one-time and repetitive inspections of the main driveshafts. The FAA is proposing this AD to address the unsafe condition on these products.

DATES: The FAA must receive comments on this proposed AD by May 10, 2021.

ADDRESSES: You may send comments, using the procedures found in 14 CFR 11.43 and 11.45, by any of the following methods:

- *Federal eRulemaking Portal:* Go to *https://www.regulations.gov.* Follow the instructions for submitting comments.
- *Fax:* (202) 493–2251.
- *Mail:* U.S. Department of Transportation, Docket Operations, M–30, West Building Ground Floor, Room W12–140, 1200 New Jersey Avenue SE, Washington, DC 20590.
- *Hand Delivery:* Deliver to Mail address above between 9 a.m. and 5 p.m., Monday through Friday, except Federal holidays.

For service information identified in this NPRM, contact Army Publishing Directorate, 9301 Chapek Rd., Bldg 1458, Fort Belvoir, VA 22060–5447; telephone (703) 614–3727; email *usarmy.pentagon.hqda-apd.mbx.customer-service@mail.mil*; or at *https://armypubs.army.mil/.*

You may also contact the following as applicable:

Arrow Falcon Exporters Inc., 2081 S Wildcat Way, Porterville, CA 93257; telephone (559) 781–8604; fax (559) 781–9271; email *afe@arrowfalcon.com.*

Global Helicopter Technology, Inc., P.O. Box 180681, Arlington, Texas 76096; telephone (817) 557–3391; email *ghti@ghti.net.*

Hagglund Helicopters, LLC, 5101 NW A Avenue, Pendleton, OR 97801; telephone (800) 882–3554 or (541) 276–3554; fax (541) 276–1597.

JASPP Engineering Services, LLC., 511 Harmon Terrace, Arlington, TX 76010; telephone (817) 465–4495; or at *www.jjaspp.com.*

Northwest Rotorcraft, LLC, 1000 85th Ave. SE, Olympia, WA 98501; telephone (360) 754–7200; or at *www.nwhelicopters.com.*

Overseas Aircraft Support, Inc., P.O. Box 898, Lakeside, AZ 85929; telephone (928) 368–6965; fax (928) 368–6962.

Richards Heavylift Helo, Inc., 1181 Osprey Nest Point, Orange Park, FL 32073; (904) 472–1481; email *Glenn7444@msn.com.*

Rotorcraft Development Corporation, P.O. Box 430, Corvallis, MT 59828; telephone (207) 329–2518; email *administration@rotorcraftdevelopment.com.*

Southwest Florida Aviation International, Inc., 28000–A9 Airport Road, Bldg. 101, Punta Gorda, FL 33982–9587; telephone (941) 637–1161; fax (941) 637–6264; email *info@swfateam.org.*

Tamarack Helicopters, Inc., 2849 McIntyre Rd., Stevensville, MT 59870; telephone (406) 777–0144; or at *www.tamarackhelicopters.com.*

You may view this service information at the FAA, Office of the Regional Counsel, Southwest Region, 10101 Hillwood Pkwy., Room 6N–321, Fort Worth, TX 76177. For information on the availability of this material at the FAA, call (817) 222–5110.

Examining the AD Docket

You may examine the AD docket at *https://www.regulations.gov* by searching for and locating Docket No. FAA–2021–0189; or in person at Docket Operations between 9 a.m. and 5 p.m., Monday through Friday, except Federal holidays. The AD docket contains this NPRM, any comments received, and other information. The street address for Docket Operations is listed above.

FOR FURTHER INFORMATION CONTACT: Matthew L. Thompson, Aerospace Engineer, DSCO Branch, FAA, 10101 Hillwood Pkwy., Fort Worth, TX 76177; telephone (817) 222–5251; email *matthew.l.thompson@faa.gov.*

SUPPLEMENTARY INFORMATION:

Comments Invited

The FAA invites you to send any written relevant data, views, or arguments about this proposal. Send your comments to an address listed under **ADDRESSES**. Include ''Docket No. FAA–2021–0189; Project Identifier AD–2020–00645–R'' at the beginning of your comments. The most helpful comments reference a specific portion of the proposal, explain the reason for any recommended change, and include supporting data. The FAA will consider all comments received by the closing date and may amend this proposal because of those comments.

Except for Confidential Business Information (CBI) as described in the following paragraph, and other information as described in 14 CFR 11.35, the FAA will post all comments received, without change, to *https://www.regulations.gov,* including any personal information you provide. The agency will also post a report summarizing each substantive verbal contact received about this NPRM.

Confidential Business Information

CBI is commercial or financial information that is both customarily and actually treated as private by its owner. Under the Freedom of Information Act (FOIA) (5 U.S.C. 552), CBI is exempt from public disclosure. If your comments responsive to this NPRM contain commercial or financial information that is customarily treated as private, that you actually treat as private, and that is relevant or responsive to this NPRM, it is important that you clearly designate the submitted comments as CBI. Please mark each page of your submission containing CBI as ''PROPIN.'' The FAA will treat such marked submissions as confidential

under the FOIA, and they will not be placed in the public docket of this NPRM. Submissions containing CBI should be sent to Matthew L. Thompson, Aerospace Engineer, DSCO Branch, FAA, 10101 Hillwood Pkwy., Fort Worth, TX 76177; telephone (817) 222–5251; email *matthew.l.thompson@faa.gov.* Any commentary that the FAA receives which is not specifically designated as CBI will be placed in the public docket for this rulemaking.

Background

The FAA proposes to adopt a new AD for type certificated Model UH–1H restricted category helicopters. The type certificate holders for these helicopters include but are not limited to Arrow Falcon Exporters Inc.; Global Helicopter Technology, Inc.; Hagglund Helicopters, LLC; JJASPP Engineering Services, LLC.; Northwest Rotorcraft, LLC; Overseas Aircraft Support, Inc.; Richards Heavylift Helo, Inc.; Rotorcraft Development Corporation; Southwest Florida Aviation International, Inc.; and Tamarack Helicopters, Inc.

This proposed AD was prompted by multiple reports of failure of a main driveshaft. This proposed AD would require establishing a life limit for certain part-numbered main driveshafts, removing and inspecting the main driveshaft, inspecting the alignment of the main driveshaft installation, and repetitive inspections of the main driveshaft. As an optional terminating action, this AD allows the installation of a certain part-numbered main driveshaft not affected by this unsafe condition. This condition, if not addressed, could result in loss of engine power to the transmission and subsequent loss of control of the helicopter.

FAA's Determination

The FAA is issuing this NPRM after determining that the unsafe condition described previously is likely to exist or develop on other products of the same type design.

Related Service Information Under 1 CFR Part 51

The FAA reviewed Headquarters, Department of the Army, Aviation Unit and Intermediate Maintenance Instructions Army Model UH–1H/V/EH–1H/X Helicopters, Technical Manual TM 55–1520–210–23–1, Change No. 42, dated April 14, 2003. This service information contains main driveshaft assembly figures and specifies procedures for the main driveshaft disassembly, cleaning, inspecting, repairing, lubricating and assembly, installing, and inspecting and correction of its alignment.

This service information is reasonably available because the interested parties have access to it through their normal course of business or by the means identified in **ADDRESSES**.

Proposed AD Requirements in This NPRM

This proposed AD would require, before further flight after the effective date of this AD, establishing a life limit of 5,000 hours time-in-service (TIS) for KAflex main driveshaft part number (P/N) SKCP2180–1, SKCP2281–1, SKCP2281–1R, and SKCP2281–103. This proposed AD would also require, within 25 hours TIS after the effective date of this AD, removing the main driveshaft and inspecting the main driveshaft for any broken, loose, or missing hardware; each flex frame and mount bolt torque stripe for movement; each joint for fretting corrosion; the main driveshaft for damage; and the alignment of the main driveshaft, and if required, adjusting the alignment. This proposed AD would then require, at intervals not to exceed 300 hours TIS, repeating the inspections with the main driveshaft installed.

As an optional terminating action, this proposed AD would allow installing KAflex main driveshaft P/N SKCP3303–1.

Costs of Compliance

The FAA estimates that this AD, if adopted as proposed, would affect 384 helicopters of U.S. registry. Labor rates are estimated at $85 per work-hour. Based on these numbers, the FAA estimates that operators may incur the following costs in order to comply with this proposed AD.

Determining the total hours TIS of the main driveshaft would take about 0.5 work-hour for an estimated cost of about $43 per helicopter and $16,512 for the U.S. fleet. Removing and inspecting the main driveshaft would take about 4 work-hours for an estimated cost of $340 per helicopter and $130,560 for the U.S. fleet. Inspecting the installed main driveshaft would take about 1 work-hour for an estimated cost of about $85 per helicopter and $32,640 for the U.S. fleet, per inspection cycle. Inspecting the alignment of the main driveshaft installation would take about 2 work-hours for an estimated cost of $170 per helicopter and $65,280 for the U.S. fleet. If required, adjusting the alignment would take about 0.5 work-hour for an estimated cost of $43 per instance. Replacing a main driveshaft would take about 1 work-hour and parts would cost about $54,000, for an estimated cost of $54,085 per replacement.

Authority for This Rulemaking

Title 49 of the United States Code specifies the FAA's authority to issue rules on aviation safety. Subtitle I, section 106, describes the authority of the FAA Administrator. Subtitle VII: Aviation Programs, describes in more detail the scope of the Agency's authority.

The FAA is issuing this rulemaking under the authority described in Subtitle VII, Part A, Subpart III, Section 44701: General requirements. Under that section, Congress charges the FAA with promoting safe flight of civil aircraft in air commerce by prescribing regulations for practices, methods, and procedures the Administrator finds necessary for safety in air commerce. This regulation is within the scope of that authority because it addresses an unsafe condition that is likely to exist or develop on products identified in this rulemaking action.

Regulatory Findings

The FAA determined that this proposed AD would not have federalism implications under Executive Order 13132. This proposed AD would not have a substantial direct effect on the States, on the relationship between the national government and the States, or on the distribution of power and responsibilities among the various levels of government.

For the reasons discussed above, I certify this proposed regulation:

(1) Is not a ''significant regulatory action'' under Executive Order 12866,

(2) Would not affect intrastate aviation in Alaska, and

(3) Would not have a significant economic impact, positive or negative, on a substantial number of small entities under the criteria of the Regulatory Flexibility Act.

List of Subjects in 14 CFR Part 39

Air transportation, Aircraft, Aviation safety, Incorporation by reference, Safety.

The Proposed Amendment

Accordingly, under the authority delegated to me by the Administrator, the FAA proposes to amend 14 CFR part 39 as follows:

PART 39—AIRWORTHINESS DIRECTIVES

■ 1. The authority citation for part 39 continues to read as follows:

Authority: 49 U.S.C. 106(g), 40113, 44701.

§ 39.13 [Amended]

■ 2. The FAA amends § 39.13 by adding the following new airworthiness directive:

Various Restricted Category Helicopters: Docket No. FAA–2021–0189; Project Identifier AD–2020–00645–R.

(a) Comments Due Date

The FAA must receive comments on this airworthiness directive (AD) by May 10, 2021.

(b) Affected ADs

None.

(c) Applicability

This AD applies to restricted category Model UH–1H helicopters; current type certificate holders include but are not limited to Arrow Falcon Exporters Inc.; Global Helicopter Technology, Inc.; Hagglund Helicopters, LLC; JJASPP Engineering Services, LLC.; Northwest Rotorcraft, LLC; Overseas Aircraft Support, Inc.; Richards Heavylift Helo, Inc.; Rotorcraft Development Corporation; Southwest Florida Aviation International, Inc.; and Tamarack Helicopters, Inc., with KAflex main driveshaft part number (P/N) SKCP2180–1, SKCP2281–1, SKCP2281–1R, or SKCP2281–103 installed.

Note 1 to paragraph (c): Helicopters with an SW205 designation are Southwest Florida Aviation International, Inc., Model UH–1H helicopters.

(d) Subject

Joint Aircraft System Component (JASC) Code: 6310, Engine/Transmission Coupling.

(e) Unsafe Condition

This AD was prompted by multiple reports of failure of the main driveshaft. The unsafe condition, if not addressed, could result in loss of engine power to the transmission and subsequent loss of control of the helicopter.

(f) Compliance

Comply with this AD within the compliance times specified, unless already done.

(g) Required Actions

(1) Before further flight after the effective date of this AD, determine the total hours time-in-service (TIS) of the main driveshaft.

(i) If the main driveshaft has accumulated less than 5,000 total hours TIS, before exceeding 5,000 total hours TIS, remove the main driveshaft from service.

(ii) If the main driveshaft has accumulated 5,000 or more total hours TIS, before further flight, remove the main driveshaft from service.

(2) Thereafter following paragraph (g)(1) of this AD, remove the main driveshaft from service before accumulating 5,000 total hours TIS.

(3) Within 25 hours TIS after the effective date of this AD, remove main driveshaft P/N SKCP2180–1, SKCP2281–1, SKCP2281–1R, or SKCP2281–103 by following 6–24.3. Removal—Main Driveshaft P/N SKCP2281–103, of Headquarters, Department of the Army, Aviation Unit and Intermediate Maintenance Instructions Army Model UH–1H/V/EH–1H/X Helicopters, Technical Manual TM 55–1520–210–23–1, Change No. 42, dated April 14, 2003 (TM 55–1520–210–23–1) and:

(i) Inspect for any broken, loose, or missing hardware. If there is broken or loose hardware, before further flight, remove the driveshaft from service. If there is missing hardware, before further flight, replace the driveshaft.

(ii) Visually inspect each flex frame and mount bolt torque stripe (red or yellow) for movement. If there is any torque stripe movement, before further flight, replace the driveshaft.

(iii) Visually inspect each joint for fretting corrosion, which may be indicated by red metallic particles. If there is any grease, oil, or dirt covering a joint, clean the area and visually inspect again. If there is any fretting corrosion, before further flight, replace the driveshaft.

(iv) Inspect the main driveshaft for mechanical damage, corrosion, an edge dent, and nick as shown in Figure 1 to paragraph (g)(3)(iv) of this AD. For the purposes of this inspection, mechanical damage may be indicated by a crack, scratch, or wear; and corrosion may be indicated by corrosion or pitting. If there is a scratch, wear, corrosion, pitting, an edge dent, or a nick within allowable limits, before further flight, repair the main driveshaft in accordance with FAA-approved procedures. If there is a crack, or a scratch, wear, corrosion, pitting, an edge dent, or a nick that exceeds allowable limits, before further flight, replace the driveshaft.

BILLING CODE 4910–13–P

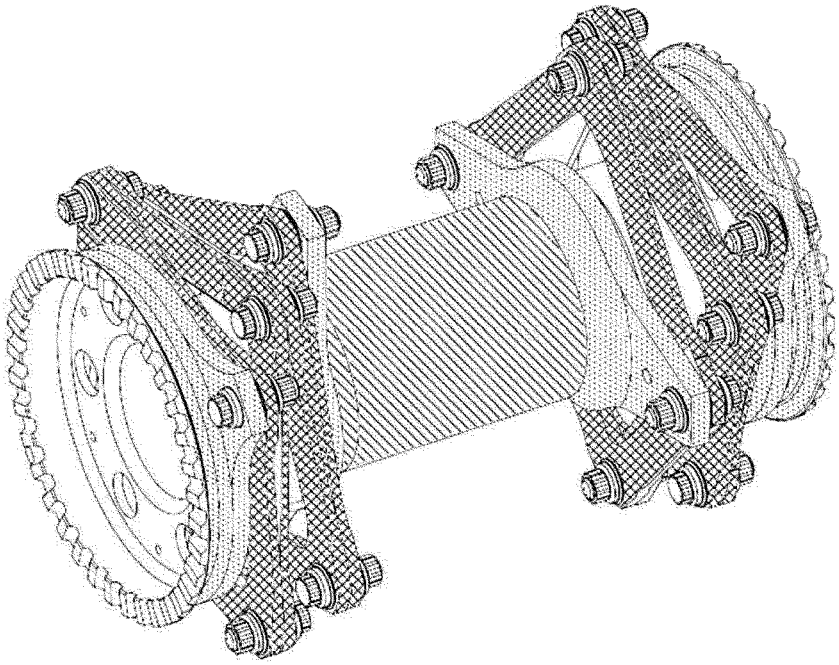

DAMAGE LOCATION SYMBOLS

Type of Damage	Maximum Damage and Repair Depth			
MECHANICAL	0.001" before and after repair	0.005" before and after repair	0.005" before and after repair	0.015" before and after repair
CORROSION	Surface, no pits	0.005" before and after repair	0.005" before and after repair	0.010" before and after repair
MAXIMUM AREA PER FULL DEPTH REPAIR	0.05 in^2	0.10 in^2	0.25 in^2	0.25 in^2
NUMBER OF REPAIRS	One per leg			
EDGE DENTS, NICKS	0.001 in	0.010 in	0.010 in	0.025 in

1. No cracks are permitted
2. Repairs must be no less than 1.000 inch apart.
3. Repairs not to be within 0.500 inches of bolt hole.
4. Faying surfaces must be free of any raised metal areas.
5. All repairs to be smooth at maximum depth and smoothly blended with surrounding surface.
6. Exposed bare metal may be touched up with Sermetel Product 1122 or 196. Zinc Chromate, primer color T, even though it does not blend cosmetically with Sermetel coating, can be used if Sermetel touch-up products are unavailable.
7. Sides and corners of flex frames are to be treated as areas.

Figure 1 to Paragraph (g)(3)(iv) – Damage Limits

BILLING CODE 4910–13–C

(4) Before installing the main driveshaft following paragraph (g)(3) of this AD, and with the engine adapter installed in the end of the engine output shaft, inspect the alignment of the main driveshaft installation between the transmission input drive quill coupling and the engine output shaft adapter by following 6–24. Alignment—Main Driveshaft, paragraphs c. through g., of TM 55–1520–210–23–1. If there is misalignment, before further flight, adjust the alignment by following 6–24. Alignment—Main Driveshaft, paragraphs h. through j., of TM 55–1520–210–23–1.

(5) Within 300 hours TIS after the effective date of this AD, and thereafter within intervals not to exceed 300 hours TIS, with

the main driveshaft installed, accomplish the actions in paragraphs (g)(3)(i) through (iv) of this AD.

(6) As an optional terminating action for the requirements of this AD, you may install KAflex main driveshaft P/N SKCP3303–1.

(h) Alternative Methods of Compliance (AMOCs)

(1) The Manager, DSCO Branch, FAA, has the authority to approve AMOCs for this AD, if requested using the procedures found in 14 CFR 39.19. In accordance with 14 CFR 39.19, send your request to your principal inspector or local Flight Standards District Office, as appropriate. If sending information directly to the manager of the certification office, send it to the attention of the person identified in Related Information. Information may be emailed to: *9-ASW-190-COS@faa.gov.*

(2) Before using any approved AMOC, notify your appropriate principal inspector, or lacking a principal inspector, the manager of the local flight standards district office/certificate holding district office.

(i) Related Information

(1) For more information about this AD, contact Matthew L. Thompson, Aerospace Engineer, DSCO Branch, FAA, 10101 Hillwood Pkwy., Fort Worth, TX 76177; telephone (817) 222–5251; email *matthew.l.thompson@faa.gov.*

(2) For service information identified in this AD, contact Army Publishing Directorate, 9301 Chapek Rd., Bldg 1458, Fort Belvoir, VA 22060–5447; telephone (703) 614–3727; email *usarmy.pentagon.hqda-apd.mbx.customer-service@mail.mil*; or at *https://armypubs.army.mil/.* You may view the service information identified in this AD at the FAA, Office of the Regional Counsel, Southwest Region, 10101 Hillwood Pkwy., Room 6N–321, Fort Worth, TX 76177. For information on the availability of this material at the FAA, call (817) 222–5110. You may also contact the following, as applicable:

(i) Arrow Falcon Exporters Inc., 2081 S Wildcat Way, Porterville, CA 93257; telephone (559) 781–8604; fax (559) 781–9271; email *afe@arrowfalcon.com.*

(ii) Global Helicopter Technology, Inc., P.O. Box 180681, Arlington, Texas 76096; telephone (817) 557–3391; email *ghti@ghti.net.*

(iii) Hagglund Helicopters, LLC, 5101 NW A Avenue, Pendleton, OR 97801; telephone (800) 882–3554 or (541) 276–3554; fax (541) 276–1597.

(iv) JASPP Engineering Services, LLC., 511 Harmon Terrace, Arlington, TX 76010; telephone (817) 465–4495; or at *www.jjaspp.com.*

(v) Northwest Rotorcraft, LLC, 1000 85th Ave. SE, Olympia, WA 98501; telephone (360) 754–7200; or at *www.nwhelicopters.com.*

(vi) Overseas Aircraft Support, Inc., P.O. Box 898, Lakeside, AZ 85929; telephone (928) 368–6965; fax (928) 368–6962.

(vii) Richards Heavylift Helo, Inc., 1181 Osprey Nest Point, Orange Park, FL 32073; (904) 472–1481; email *Glenn7444@msn.com.*

(viii) Rotorcraft Development Corporation, P.O. Box 430, Corvallis, MT 59828; telephone (207) 329–2518; email *administration@rotorcraftdevelopment.com.*

(ix) Southwest Florida Aviation International, Inc., 28000–A9 Airport Road, Bldg. 101, Punta Gorda, FL 33982–9587; telephone (941) 637–1161; fax (941) 637–6264; email *info@swfateam.org.*

(x) Tamarack Helicopters, Inc., 2849 McIntyre Rd., Stevensville, MT 59870; telephone (406) 777–0144; or at *www.tamarackhelicopters.com.*

Issued on March 12, 2021.

Lance T. Gant,

Director, Compliance & Airworthiness Division, Aircraft Certification Service.

[FR Doc. 2021–05561 Filed 3–25–21; 8:45 am]

BILLING CODE 4910–13–P

DEPARTMENT OF TRANSPORTATION

Federal Aviation Administration

14 CFR Part 39

[Docket No. FAA–2021–0192; Project Identifier MCAI–2020–01580–T]

RIN 2120–AA64

Airworthiness Directives; Airbus SAS Airplanes

AGENCY: Federal Aviation Administration (FAA), DOT.

ACTION: Notice of proposed rulemaking (NPRM).

SUMMARY: The FAA proposes to adopt a new airworthiness directive (AD) for certain Airbus SAS (Airbus) Model A318 series airplanes; Model A319–111, –112, –113, –114, –115, –131, –132, –133, –151N, and –153N airplanes; Model A320 series airplanes; and Model A321 series airplanes. This proposed AD was prompted by a determination that new or more restrictive airworthiness limitations are necessary. This proposed AD would require revising the existing maintenance or inspection program, as applicable, to incorporate new or more restrictive airworthiness limitations, as specified in a European Union Aviation Safety Agency (EASA) AD, which is proposed for incorporation by reference. The FAA is proposing this AD to address the unsafe condition on these products.

DATES: The FAA must receive comments on this proposed AD by May 10, 2021.

ADDRESSES: You may send comments, using the procedures found in 14 CFR 11.43 and 11.45, by any of the following methods:

- *Federal eRulemaking Portal:* Go to *https://www.regulations.gov.* Follow the instructions for submitting comments.
- *Fax:* 202–493–2251.
- *Mail:* U.S. Department of Transportation, Docket Operations, M–30, West Building Ground Floor, Room W12–140, 1200 New Jersey Avenue SE, Washington, DC 20590.
- *Hand Delivery:* Deliver to Mail address above between 9 a.m. and 5 p.m., Monday through Friday, except Federal holidays.

For material that will be incorporated by reference (IBR) in this AD, contact EASA, Konrad-Adenauer-Ufer 3, 50668 Cologne, Germany; telephone +49 221 8999 000; email *ADs@easa.europa.eu;* internet *www.easa.europa.eu.* You may find this IBR material on the EASA website at *https://ad.easa.europa.eu.* You may view this IBR material at the FAA, Airworthiness Products Section, Operational Safety Branch, 2200 South 216th St., Des Moines, WA. For information on the availability of this material at the FAA, call 206–231–3195. It is also available in the AD docket on the internet at *https://www.regulations.gov* by searching for and locating Docket No. FAA–2021–0192.

Examining the AD Docket

You may examine the AD docket on the internet at *https://www.regulations.gov* by searching for and locating Docket No. FAA–2021–0192; or in person at Docket Operations between 9 a.m. and 5 p.m., Monday through Friday, except Federal holidays. The AD docket contains this NPRM, any comments received, and other information. The street address for Docket Operations is listed above.

FOR FURTHER INFORMATION CONTACT: Sanjay Ralhan, Aerospace Engineer, Large Aircraft Section, International Validation Branch, FAA, 2200 South 216th St., Des Moines, WA 98198; telephone and fax 206–231–3223; email *sanjay.ralhan@faa.gov.*

SUPPLEMENTARY INFORMATION:

Comments Invited

The FAA invites you to send any written relevant data, views, or arguments about this proposal. Send your comments to an address listed under **ADDRESSES**. Include ''Docket No. FAA–2021–0192; Project Identifier MCAI–2020–01580–T'' at the beginning of your comments. The most helpful comments reference a specific portion of the proposal, explain the reason for any recommended change, and include supporting data. The FAA will consider all comments received by the closing date and may amend the proposal because of those comments.

Except for Confidential Business Information (CBI) as described in the following paragraph, and other information as described in 14 CFR

11.35, the FAA will post all comments received, without change, to *https://www.regulations.gov,* including any personal information you provide. The agency will also post a report summarizing each substantive verbal contact received about this proposed AD.

Confidential Business Information

CBI is commercial or financial information that is both customarily and actually treated as private by its owner. Under the Freedom of Information Act (FOIA) (5 U.S.C. 552), CBI is exempt from public disclosure. If your comments responsive to this NPRM contain commercial or financial information that is customarily treated as private, that you actually treat as private, and that is relevant or responsive to this NPRM, it is important that you clearly designate the submitted comments as CBI. Please mark each page of your submission containing CBI as ''PROPIN.'' The FAA will treat such marked submissions as confidential under the FOIA, and they will not be placed in the public docket of this NPRM. Submissions containing CBI should be sent to Sanjay Ralhan, Aerospace Engineer, Large Aircraft Section, International Validation Branch, FAA, 2200 South 216th St., Des Moines, WA 98198; telephone and fax 206–231–3223; email *sanjay.ralhan@faa.gov.* Any commentary that the FAA receives which is not specifically designated as CBI will be placed in the public docket for this rulemaking.

Background

EASA, which is the Technical Agent for the Member States of the European Union, has issued EASA AD 2020–0219, dated October 12, 2020 (EASA AD 2020–0219) (also referred to as the mandatory continuing airworthiness information, or ''the MCAI''), to correct an unsafe condition for all Airbus Model A318 series; Model A319–111, –112, –113, , –115, –131, –132, –133, –151N, and –153N; Model A320–211, –212, –214, –215, –216, –231, –232, –233, –251N, –252N, –253N, –271N, –272N, and –273N airplanes; and Model A321 series airplanes. EASA AD 2020–0219 states that Airbus has published new and more restrictive tasks to be incorporated into the airworthiness limitations section of the aircraft maintenance program. According to EASA, failure to accomplish these tasks could result in an unsafe condition.

This proposed AD was prompted by a determination that the new and more restrictive airworthiness limitations are necessary. Some of the subject tasks in EASA AD 2020–0219 are also required by EASA AD 2020–0067, which prompted FAA AD 2020–22–16, Amendment 39–21312 (85 FR 70439, November 5, 2020) (AD 2020–22–16). The requirements in EASA AD 2020–0219 invalidate prior instructions for those tasks. This proposed AD would therefore terminate (invalidate) the corresponding requirements of AD 2020–22–16, for tasks 213100–00001–1–C, 213100–00001–2–C, and 213100–00001–3–C, as identified in the service information referred in EASA AD 2020–0219 only.

EASA AD 2020–0219 refers to Airbus A318/A319/A320/A321 Airworthiness Limitations Section (ALS) Part 3 Variation 7.1, dated June 10, 2020. Because airplanes with an original airworthiness certificate or original export certificate of airworthiness issued after June 10, 2020, must comply with the airworthiness limitations specified as part of the approved type design, this proposed AD would not apply to those airplanes. Also, Model A320–215 airplanes are not certificated by the FAA and are not included on the U.S. type certificate; therefore, this proposed AD would not apply to that model airplane. The FAA is proposing this AD to address a safety-significant latent failure (that is not annunciated), which, in combination with one or more other specific failures or events, could result in a hazardous or catastrophic failure condition. See the MCAI for additional background information.

Related Service Information Under 1 CFR Part 51

EASA AD 2020–0219 specifies new and more restrictive airworthiness limitations for certain safety valves. This material is reasonably available because the interested parties have access to it through their normal course of business or by the means identified in the **ADDRESSES** section.

FAA's Determination and Requirements of This Proposed AD

This product has been approved by the aviation authority of another country and is approved for operation in the United States. Pursuant to the FAA's bilateral agreement with the State of Design Authority, it has notified the FAA of the unsafe condition described in the MCAI referenced above. The FAA is issuing this NPRM after determining that the unsafe condition described previously is likely to exist or develop on other products of the same type design.

Proposed AD Requirements

This proposed AD would require revising the existing maintenance or inspection program, as applicable, to incorporate new or more restrictive airworthiness limitations, which are specified in EASA AD 2020–0219 described previously, as incorporated by reference.

This proposed AD would require revisions to certain operator maintenance documents to include new actions (*e.g.,* inspections). Compliance with these actions is required by 14 CFR 91.403(c). For airplanes that have been previously modified, altered, or repaired in the areas addressed by this proposed AD, the operator may not be able to accomplish the actions described in the revisions. In this situation, to comply with 14 CFR 91.403(c), the operator must request approval for an alternative method of compliance according to paragraph (j)(1) of this proposed AD.

Explanation of Required Compliance Information

In the FAA's ongoing efforts to improve the efficiency of the AD process, the FAA initially worked with Airbus and EASA to develop a process to use certain EASA ADs as the primary source of information for compliance with requirements for corresponding FAA ADs. The FAA has since coordinated with other manufacturers and civil aviation authorities to use this process. As a result, EASA AD 2020–0219 would be incorporated by reference in the FAA final rule. This proposed AD would, therefore, require compliance with certain paragraphs of EASA AD 2020–0219, through that incorporation.

Service information specified in EASA AD 2020–0219 that is required for compliance with EASA AD 2020–0219 will be available on the internet at *https://www.regulations.gov* by searching for and locating Docket No. FAA–2021–0192 after the FAA final rule is published.

Airworthiness Limitation ADs Using the New Process

The FAA's process of incorporating by reference MCAIs as the primary source of information for compliance with corresponding FAA ADs has been limited to certain MCAIs (primarily those with service bulletins as the primary source of information for accomplishing the actions required by the FAA AD). However, the FAA is now expanding the process to include MCAIs that require a change to airworthiness limitation documents, such as airworthiness limitation sections.

For these ADs that incorporate by reference an MCAI that changes airworthiness limitations, the FAA requirements are unchanged. Operators

must revise the existing maintenance or inspection program, as applicable, to incorporate the information specified in the new airworthiness limitation document. The airworthiness limitations must be followed according to 14 CFR 91.403(c) and 91.409(e).

The previous format of the airworthiness limitation ADs included a paragraph that specified that no alternative actions (*e.g.,* inspections) or intervals may be used unless the actions and intervals are approved as an alternative method of compliance (AMOC) in accordance with the procedures specified in the AMOCs paragraph under ''Other FAA Provisions.'' This new format includes a ''Provisions for Alternative Actions and Intervals'' paragraph that does not specifically refer to AMOCs, but operators may still request an AMOC to use an alternative action or interval.

Costs of Compliance

The FAA estimates that this AD, if adopted as proposed, would affect 1,680 airplanes of U.S. registry. The FAA estimates the following costs to comply with this proposed AD.

The FAA has determined that revising the existing maintenance or inspection program takes an average of 90 work-hours per operator. The agency recognizes that this number may vary from operator to operator. Since operators incorporate maintenance or inspection program changes for their affected fleet(s), the FAA has determined that a per-operator estimate is more accurate than a per-airplane estimate. Therefore, the agency estimates the average total cost per operator would be $7,650 (90 work-hours × $85 per work-hour).

Authority for This Rulemaking

Title 49 of the United States Code specifies the FAA's authority to issue rules on aviation safety. Subtitle I, section 106, describes the authority of the FAA Administrator. Subtitle VII: Aviation Programs, describes in more detail the scope of the Agency's authority.

The FAA is issuing this rulemaking under the authority described in Subtitle VII, Part A, Subpart III, Section 44701: General requirements. Under that section, Congress charges the FAA with promoting safe flight of civil aircraft in air commerce by prescribing regulations for practices, methods, and procedures the Administrator finds necessary for safety in air commerce. This regulation is within the scope of that authority because it addresses an unsafe condition that is likely to exist or develop on products identified in this rulemaking action.

Regulatory Findings

The FAA has determined that this proposed AD would not have federalism implications under Executive Order 13132. This proposed AD would not have a substantial direct effect on the States, on the relationship between the national Government and the States, or on the distribution of power and responsibilities among the various levels of government.

For the reasons discussed above, I certify this proposed regulation:

(1) Is not a ''significant regulatory action'' under Executive Order 12866,

(2) Would not affect intrastate aviation in Alaska, and

(3) Would not have a significant economic impact, positive or negative, on a substantial number of small entities under the criteria of the Regulatory Flexibility Act.

List of Subjects in 14 CFR Part 39

Air transportation, Aircraft, Aviation safety, Incorporation by reference, Safety.

The Proposed Amendment

Accordingly, under the authority delegated to me by the Administrator, the FAA proposes to amend 14 CFR part 39 as follows:

PART 39—AIRWORTHINESS DIRECTIVES

■ 1. The authority citation for part 39 continues to read as follows:

Authority: 49 U.S.C. 106(g), 40113, 44701.

§ 39.13 [Amended]

■ 2. The FAA amends § 39.13 by adding the following new airworthiness directive:

Airbus SAS: Docket No. FAA–2021–0192; Project Identifier MCAI–2020–01580–T.

(a) Comments Due Date

The FAA must receive comments on this airworthiness directive (AD) by May 10, 2021.

(b) Affected ADs

This AD affects AD 2020–22–16, Amendment 39–21312 (85 FR 70439, November 5, 2020) (AD 2020–22–16).

(c) Applicability

This AD applies to the following Airbus SAS airplanes, certificated in any category, with an original airworthiness certificate or original export certificate of airworthiness issued on or before June 10, 2020:

(1) Model A318–111, –112, –121, and –122 airplanes;

(2) Model A319–111, –112, –113, –114, –115, –131, –132, –133, –151N, and –153N airplanes;

(3) Model A320–211, –212, –214, –216, –231, –232, –233, –251N, –252N, –253N, –271N, –272N, and –273N airplanes; and

(4) Model A321–111, –112, –131, –211, –212, –213, –231, –232, –251N, –252N, –253N, –271N, –272N, –251NX, –252NX, –253NX, –271NX, and –272NX airplanes.

(d) Subject

Air Transport Association (ATA) of America Code 05, Time Limits/Maintenance Checks.

(e) Reason

This AD was prompted by a determination that new or more restrictive airworthiness limitations are necessary. The FAA is issuing this AD to address a safety-significant latent failure (that is not annunciated), which, in combination with one or more other specific failures or events, could result in a hazardous or catastrophic failure condition.

(f) Compliance

Comply with this AD within the compliance times specified, unless already done.

(g) Requirements

Revise the existing maintenance or inspection program, as applicable, by incorporating task(s) and associated thresholds and intervals specified in paragraph (3) of European Union Aviation Safety Agency (EASA) AD 2020–0219, dated October 12, 2020 (EASA AD 2020–0219), except you are required to incorporate task(s) and associated thresholds and intervals within 90 days after the effective date of this AD. Record a compliance time for the initial tasks of either the applicable ''thresholds'' incorporated by the requirements of paragraph (3) of EASA AD 2020–0219 or 90 days after the effective date of this AD, whichever would occur later.

(h) Provisions for Alternative Actions and Intervals

After the existing maintenance or inspection program has been revised as required by paragraph (g) of this AD, no alternative actions (*e.g.,* inspections) and intervals are allowed unless they are approved as specified in the provisions of the ''Ref. Publications'' section of EASA AD 2020–0219.

(i) Terminating Action for Certain Requirements of AD 2020–22–16

Accomplishing the actions required by this AD terminates the corresponding requirements of AD 2020–22–16, for the tasks identified in the service information referred in EASA AD 2020–0219 only.

(j) Other FAA AD Provisions

The following provisions also apply to this AD:

(1) *Alternative Methods of Compliance (AMOCs):* The Manager, Large Aircraft Section, International Validation Branch, FAA, has the authority to approve AMOCs for this AD, if requested using the procedures found in 14 CFR 39.19. In accordance with 14 CFR 39.19, send your request to your principal inspector or local Flight Standards District Office, as appropriate. If sending

information directly to the Large Aircraft Section, International Validation Branch, send it to the attention of the person identified in paragraph (k)(2) of this AD. Information may be emailed to: *9-AVS-AIR-730-AMOC@faa.gov.* Before using any approved AMOC, notify your appropriate principal inspector, or lacking a principal inspector, the manager of the local flight standards district office/certificate holding district office.

(2) *Contacting the Manufacturer:* For any requirement in this AD to obtain instructions from a manufacturer, the instructions must be accomplished using a method approved by the Manager, Large Aircraft Section, International Validation Branch, FAA; or EASA; or Airbus SAS's EASA Design Organization Approval (DOA). If approved by the DOA, the approval must include the DOA-authorized signature.

(3) *Required for Compliance (RC):* Except as required by paragraph (j)(2) of this AD, if any service information contains procedures or tests that are identified as RC, those procedures and tests must be done to comply with this AD; any procedures or tests that are not identified as RC are recommended. Those procedures and tests that are not identified as RC may be deviated from using accepted methods in accordance with the operator's maintenance or inspection program without obtaining approval of an AMOC, provided the procedures and tests identified as RC can be done and the airplane can be put back in an airworthy condition. Any substitutions or changes to procedures or tests identified as RC require approval of an AMOC.

(k) Related Information

(1) For information about EASA AD 2020–0219, contact EASA, Konrad-Adenauer-Ufer 3, 50668 Cologne, Germany; telephone +49 221 8999 000; email *ADs@easa.europa.eu;* internet *www.easa.europa.eu.* You may find this EASA AD on the EASA website at *https://ad.easa.europa.eu.* You may view this material at the FAA, Airworthiness Products Section, Operational Safety Branch, 2200 South 216th St., Des Moines, WA. For information on the availability of this material at the FAA, call 206–231–3195. This material may be found in the AD docket on the internet at *https://www.regulations.gov* by searching for and locating Docket No. FAA–2021–0192.

(2) For more information about this AD, contact Sanjay Ralhan, Aerospace Engineer, Large Aircraft Section, International Validation Branch, FAA, 2200 South 216th St., Des Moines, WA 98198; telephone and fax 206–231–3223; email *sanjay.ralhan@faa.gov.*

Issued on March 18, 2021.

Lance T. Gant,

Director, Compliance & Airworthiness Division, Aircraft Certification Service.

[FR Doc. 2021–06236 Filed 3–25–21; 8:45 am]

BILLING CODE 4910–13–P

DEPARTMENT OF TRANSPORTATION

Federal Aviation Administration

14 CFR Part 39

[Docket No. FAA–2021–0134; Project Identifier AD–2020–01254–T]

RIN 2120–AA64

Airworthiness Directives; The Boeing Company Airplanes

AGENCY: Federal Aviation Administration (FAA), DOT.

ACTION: Notice of proposed rulemaking (NPRM).

SUMMARY: The FAA proposes to adopt a new airworthiness directive (AD) for certain The Boeing Company Model 777 airplanes. This proposed AD was prompted by significant changes, including new or more restrictive requirements, made to the airworthiness limitations (AWLs) and Critical Design Configuration Control Limitations (CDCCLs) related to fuel tank ignition prevention, the engine fuel suction feed system, and the nitrogen generation system. This proposed AD would require revising the existing maintenance or inspection program, as applicable, to incorporate new or more restrictive airworthiness limitations. The FAA is proposing this AD to address the unsafe condition on these products.

DATES: The FAA must receive comments on this proposed AD by May 10, 2021.

ADDRESSES: You may send comments, using the procedures found in 14 CFR 11.43 and 11.45, by any of the following methods:

- *Federal eRulemaking Portal:* Go to *https://www.regulations.gov.* Follow the instructions for submitting comments.
- *Fax:* 202–493–2251.
- *Mail:* U.S. Department of Transportation, Docket Operations, M–30, West Building Ground Floor, Room W12–140, 1200 New Jersey Avenue SE, Washington, DC 20590.
- *Hand Delivery:* Deliver to Mail address above between 9 a.m. and 5 p.m., Monday through Friday, except Federal holidays.

For service information identified in this NPRM, contact Boeing Commercial Airplanes, Attention: Contractual & Data Services (C&DS), 2600 Westminster Blvd., MC 110–SK57, Seal Beach, CA 90740–5600; telephone 562–797–1717; internet *https://www.myboeingfleet.com.* You may view this service information at the FAA, Airworthiness Products Section, Operational Safety Branch, 2200 South 216th St., Des Moines, WA. For information on the availability of this material at the FAA, call 206–231–3195.

Examining the AD Docket

You may examine the AD docket on the internet at *https://www.regulations.gov* by searching for and locating Docket No. FAA–2021–0134; or in person at Docket Operations between 9 a.m. and 5 p.m., Monday through Friday, except Federal holidays. The AD docket contains this NPRM, any comments received, and other information. The street address for Docket Operations is listed above.

FOR FURTHER INFORMATION CONTACT: Kevin Nguyen, Aerospace Engineer, Propulsion Section, FAA, Seattle ACO Branch, 2200 South 216th St., Des Moines, WA 98198; phone and fax: 206–231–3555; email: *kevin.nguyen@faa.gov.*

SUPPLEMENTARY INFORMATION:

Comments Invited

The FAA invites you to send any written relevant data, views, or arguments about this proposal. Send your comments to an address listed under **ADDRESSES**. Include ''Docket No. FAA–2021–0134; Project Identifier AD AD–2020–01254–T'' at the beginning of your comments. The most helpful comments reference a specific portion of the proposal, explain the reason for any recommended change, and include supporting data. The FAA will consider all comments received by the closing date and may amend the proposal because of those comments.

Except for Confidential Business Information (CBI) as described in the following paragraph, and other information as described in 14 CFR 11.35, the FAA will post all comments received, without change, to *https://www.regulations.gov,* including any personal information you provide. The agency will also post a report summarizing each substantive verbal contact received about this proposed AD.

Confidential Business Information

CBI is commercial or financial information that is both customarily and actually treated as private by its owner. Under the Freedom of Information Act (FOIA) (5 U.S.C. 552), CBI is exempt from public disclosure. If your comments responsive to this NPRM contain commercial or financial information that is customarily treated as private, that you actually treat as private, and that is relevant or responsive to this NPRM, it is important that you clearly designate the submitted comments as CBI. Please mark each page of your submission containing CBI as ''PROPIN.'' The FAA will treat such

marked submissions as confidential under the FOIA, and they will not be placed in the public docket of this NPRM. Submissions containing CBI should be sent to Kevin Nguyen, Aerospace Engineer, Propulsion Section, FAA, Seattle ACO Branch, 2200 South 216th St., Des Moines, WA 98198; phone and fax: 206–231–3555; email: *kevin.nguyen@faa.gov.* Any commentary that the FAA receives which is not specifically designated as CBI will be placed in the public docket for this rulemaking.

Background

The FAA has examined the underlying safety issues involved in fuel tank explosions on several large transport airplanes, including the adequacy of existing regulations, the service history of airplanes subject to those regulations, and existing maintenance practices for fuel tank systems. As a result of those findings, the FAA issued a final rule titled ''Transport Airplane Fuel Tank System Design Review, Flammability Reduction, and Maintenance and Inspection Requirements'' (66 FR 23086, May 7, 2001). In addition to new airworthiness standards for transport airplanes and new maintenance requirements that rule included Amendment 21–78, which established Special Federal Aviation Regulation No. 88 (''SFAR 88'') to 14 CFR part 21. Subsequently, SFAR 88 was amended by: Amendment 21–82 (67 FR 57490, September 10, 2002; corrected at 67 FR 70809, November 26, 2002), Amendment 21–83 (67 FR 72830, December 9, 2002; corrected at 68 FR 37735, June 25, 2003, to change ''21–82'' to ''21–83''), and Amendment 21–101 (83 FR 9162, March 5, 2018).

Among other actions, SFAR 88 requires certain type design (*i.e.,* type certificate (TC) and supplemental type certificate (STC)) holders to substantiate that their fuel tank systems can prevent ignition sources in the fuel tanks. This requirement applies to type design holders for large turbine-powered transport airplanes and for subsequent modifications to those airplanes. It requires them to perform design reviews and to develop design changes and maintenance procedures if their designs do not meet the new fuel tank safety standards. As explained in the preamble to the final rule published on May 7, 2001, the FAA intended to adopt airworthiness directives to mandate any changes found necessary to address unsafe conditions identified as a result of these reviews.

In evaluating these design reviews, the FAA has established four criteria intended to define the unsafe conditions associated with fuel tank systems that require corrective actions. The percentage of operating time during which fuel tanks are exposed to flammable conditions is one of these criteria. The other three criteria address the failure types under evaluation: Single failures, single failures in combination with another latent condition(s), and in-service failure experience. For all four criteria, the evaluations included consideration of previous actions taken that may mitigate the need for further action.

The FAA issued AD 2008–11–13, Amendment 39–15536 (73 FR 30737, May 29, 2008) (AD 2008–11–13), which applies to certain The Boeing Company Model 777–200, –200LR, –300, and –300ER series airplanes. The applicability of AD 2008–11–13 did not include the Boeing Company Model 777F series airplane because those airplanes were not yet type certificated. AD 2008–11–13 requires incorporation of fuel system AWLs and also requires an initial inspection to phase in certain repetitive inspections, and repair if necessary. The fuel system AWLs were developed to satisfy SFAR 88 requirements and were included in the Airworthiness Limitations Section (ALS) of the manufacturer's Instructions for Continued Airworthiness. Since the FAA issued AD 2008–11–13, the ALS has been significantly revised by the manufacturer to correct technical and editorial errors and also to add new or more restrictive requirements. Many of those changes are related to fuel tank ignition prevention, the engine fuel suction feed system, and the nitrogen generation system. The FAA has determined that the specific revisions of the AWL mandated by AD 2008–11–13 (which applies to airplanes with an original standard airworthiness certificate or original export certificate of airworthiness issued before December 5, 2007) and the revisions of the AWL that have been delivered with airplanes as part of the type design and airworthiness certificate on or after December 5, 2007, are inadequate to provide information necessary to maintain critical design features and perform inspections.

The FAA also issued AD 2014–09–09, Amendment 39–17844 (79 FR 30005, May 27, 2014) (AD 2014–09–09), which applies to all The Boeing Company Model 777–200, –200LR, –300, –300ER, and 777F series airplanes. AD 2014–09–09 requires revising the maintenance program to incorporate a revision to the Airworthiness Limitations Section of the maintenance planning data (MPD) document. Since the FAA issued AD 2014–09–09, 28–AWL–101 has been revised, therefore, this proposed AD would require the incorporation of the revised 28–AWL–101. Incorporating the revision required by this proposed AD would terminate all the requirements of AD 2014–09–09.

The FAA has received a report indicating that significant changes, including new or more restrictive requirements, made to the AWLs and CDCCLs related to fuel tank ignition prevention, the engine fuel suction feed system, and the nitrogen generation system. The FAA is issuing this AD to address ignition sources inside the fuel tanks and the increased flammability exposure of the center fuel tank caused by latent failures, alterations, repairs, or maintenance actions, which could result in a fuel tank explosion and consequent loss of an airplane; and to address potential loss of engine fuel suction feed capability, which could result in dual engine flameouts, inability to restart engines, and consequent forced landing of the airplane.

Related Service Information Under 1 CFR Part 51

The FAA reviewed Section 9, Airworthiness Limitations (AWLs) and Certification Maintenance Requirements (CMRs), of Boeing 777–200/200LR/300/300ER/777F Maintenance Planning Data (MPD) Document, D622W001–9, dated November 2019. This service information describes airworthiness limitations and CDCCLs tasks related to fuel tank ignition prevention, the engine fuel suction feed system, and the nitrogen generation system. This service information is reasonably available because the interested parties have access to it through their normal course of business or by the means identified in the **ADDRESSES** section.

FAA's Determination

The FAA is proposing this AD because the agency evaluated all the relevant information and determined the unsafe condition described previously is likely to exist or develop in other products of the same type design.

Proposed AD Requirements

This proposed AD would require revising the existing maintenance or inspection program, as applicable, to incorporate new or more restrictive airworthiness limitations.

This proposed AD would require revisions to certain operator maintenance documents to include new actions (*e.g.,* inspections) and CDCCLs. Compliance with these actions and CDCCLs is required by 14 CFR

91.403(c). For airplanes that have been previously modified, altered, or repaired in the areas addressed by this proposed AD, the operator may not be able to accomplish the actions described in the revisions. In this situation, to comply with 14 CFR 91.403(c), the operator must request approval for an alternative method of compliance according to paragraph (k) of this proposed AD.

Differences Between This Proposed AD and the Service Information

Paragraph (g) of this proposed AD would require operators to revise their existing maintenance or inspection program by incorporating, in part, AWL No. 28–AWL–11, ''Fuel Quantity Indicating System (FQIS) and Auxiliary Fuel Tank (Cell) Electronic Fuel Level Indication System (EFLI)—Out Tank Wiring Installation Separation Requirement,'' of Section 9, Airworthiness Limitations (AWLs) and Certification Maintenance Requirements (CMRs), of Boeing 777–200/200LR/300/300ER/777F Maintenance Planning Data (MPD) Document, D622W001–9, dated November 2019.

Paragraph (h) of this proposed AD would allow certain changes to be made to the requirements specified in AWL No. 28–AWL–11 as an option. Where AWL No. 28–AWL–11 identifies certain wire types for routing and installation of any new wiring under certain conditions, paragraph (h) of this proposed AD provides acceptable alternative wire types. Additionally, where AWL No. 28–AWL–11 identifies certain wiring sleeve material for new wiring installed under certain conditions, paragraph (h) of this proposed AD provides acceptable alternative wire sleeve materials.

Alternative Methods of Compliance (AMOCs) Previously Approved for AD 2008–11–13

The FAA has previously issued AMOC approvals for compliance with paragraph (g)(2) of AD 2008–11–13 to allow operators to incorporate alternative versions of AWL No. 28–AWL–11. AWL No. 28–AWL–11 includes the requirements for new wiring introduced by any alterations or changes to the type design, including STC modifications, in proximity to wiring that penetrates the fuel tank wall. Certain STCs that introduced new wiring near the fuel quantity indicating system (FQIS) wiring utilized design features that were different from the critical design features for fuel tank ignition prevention specified in the AD-mandated version of AWL No. 28–AWL–11. For those STCs, the FAA has approved alternative versions of AWL No. 28–AWL–11 that specified critical design features associated with STC modifications. The FAA has determined that certain critical design features specified in the AMOC-approved versions of AWL No. 28–AWL–11 are not acceptable to meet the intent of this AWL. Therefore, this proposed AD does not allow credit for AMOCs previously approved under AD 2008–11–13. However, based on the agency's assessment of critical design features, the FAA has provided options under paragraph (h) of this proposed AD to allow certain changes to be made to the requirements specified in AWL No. 28–AWL–11.

The requirements for new wiring versus existing wiring are specified in AWL No. 28–AWL–11. Based on these requirements, any STC modifications that are installed after the incorporation of the version of AWL No. 28–AWL–11 required by paragraph (g) of this proposed AD must comply with AWL No. 28–AWL–11, including any mandatory rework, or the operator must request approval of an AMOC according to paragraph (k) of this proposed AD. Any STC modifications that are installed prior to the incorporation of the version of AWL No. 28 AWL–11 required by paragraph (g) of this proposed AD are not required to be reworked for compliance with the new wiring requirements of AWL No. 28–AWL–11, except that future repair and replacement of existing wiring must follow AWL No. 28–AWL–11.

Costs of Compliance

The FAA estimates that this proposed AD affects 219 airplanes of U.S. registry. The FAA estimates the following costs to comply with this proposed AD:

The FAA has determined that revising the existing maintenance or inspection program takes an average of 90 work-hours per operator, although the agency recognizes that this number may vary from operator to operator. Since operators incorporate maintenance or inspection program changes for their affected fleet(s), the FAA has determined that a per-operator estimate is more accurate than a per-airplane estimate. Therefore, the FAA estimates the average total cost per operator to be $7,650 (90 work-hours × $85 per work-hour).

Authority for This Rulemaking

Title 49 of the United States Code specifies the FAA's authority to issue rules on aviation safety. Subtitle I, section 106, describes the authority of the FAA Administrator. Subtitle VII: Aviation Programs, describes in more detail the scope of the Agency's authority.

The FAA is issuing this rulemaking under the authority described in Subtitle VII, Part A, Subpart III, Section 44701: General requirements. Under that section, Congress charges the FAA with promoting safe flight of civil aircraft in air commerce by prescribing regulations for practices, methods, and procedures the Administrator finds necessary for safety in air commerce. This regulation is within the scope of that authority because it addresses an unsafe condition that is likely to exist or develop on products identified in this rulemaking action.

Regulatory Findings

The FAA determined that this proposed AD would not have federalism implications under Executive Order 13132. This proposed AD would not have a substantial direct effect on the States, on the relationship between the national Government and the States, or on the distribution of power and responsibilities among the various levels of government.

For the reasons discussed above, I certify this proposed regulation:

(1) Is not a ''significant regulatory action'' under Executive Order 12866,

(2) Would not affect intrastate aviation in Alaska, and

(3) Would not have a significant economic impact, positive or negative, on a substantial number of small entities under the criteria of the Regulatory Flexibility Act.

List of Subjects in 14 CFR Part 39

Air transportation, Aircraft, Aviation safety, Incorporation by reference, Safety.

The Proposed Amendment

Accordingly, under the authority delegated to me by the Administrator, the FAA proposes to amend 14 CFR part 39 as follows:

PART 39—AIRWORTHINESS DIRECTIVES

■ 1. The authority citation for part 39 continues to read as follows:

Authority: 49 U.S.C. 106(g), 40113, 44701.

§ 39.13 [Amended]

■ 2. The FAA amends § 39.13 by adding the following new airworthiness directive:

The Boeing Company: Docket No. FAA–2021–0134; Project Identifier AD–2020–01254–T.

(a) Comments Due Date

The FAA must receive comments on this airworthiness directive (AD) action by May 10, 2021.

(b) Affected ADs

This AD affects the ADs specified in paragraphs (b)(1) and (2) of this AD.

(1) AD 2008–11–13, Amendment 39–15536 (73 FR 30737, May 29, 2008) (AD 2008–11–13).

(2) AD 2014–09–09, Amendment 39–17844 (79 FR 30005, May 27, 2014) (AD 2014–09–09).

(c) Applicability

This AD applies to The Boeing Company Model 777–200, –200LR, –300, –300ER, and 777F series airplanes having line numbers (L/Ns) 1 through 1609 inclusive, certificated in any category.

(d) Subject

Air Transport Association (ATA) of America Code 28, Fuel; 47, Inert Gas System.

(e) Unsafe Condition

This AD was prompted by significant changes, including new or more restrictive requirements, made to the airworthiness limitations (AWLs) and Critical Design Configuration Control Limitations (CDCCLs) related to fuel tank ignition prevention, the engine fuel suction feed system, and the nitrogen generation system. The FAA is issuing this AD to address ignition sources inside the fuel tanks and the increased flammability exposure of the center fuel tank caused by latent failures, alterations, repairs, or maintenance actions, which could result in a fuel tank explosion and consequent loss of an airplane; and to address potential loss of engine fuel suction feed capability, which could result in dual engine flameouts, inability to restart engines, and consequent forced landing of the airplane.

(f) Compliance

Comply with this AD within the compliance times specified, unless already done.

(g) Maintenance or Inspection Program Revision

Within 60 days after the effective date of this AD, revise the existing maintenance or inspection program, as applicable, to incorporate the information in Section D, ''Airworthiness Limitations—Systems,'' including Subsections D.1, D.2, and D.3, of Section 9, Airworthiness Limitations (AWLs) and Certification Maintenance Requirements (CMRs), of Boeing 777–200/200LR/300/300ER/777F Maintenance Planning Data (MPD) Document, D622W001–9, dated November 2019; except as provided by paragraph (h) of this AD. The initial compliance time for doing the airworthiness limitation instructions (ALI) tasks is at the times specified in paragraphs (g)(1) through (10) of this AD.

(1) For AWL 28–AWL–01, ''External Wires Over Center Fuel Tank'': Within 16,000 flight cycles or 3,000 days, whichever occurs first after the date of issuance of the original airworthiness certificate or the date of issuance of the original export certificate of airworthiness; or within 16,000 flight cycles or 3,000 days, whichever occurs first after the most recent inspection was performed as specified in 28–AWL–01; whichever occurs later.

(2) For AWL 28–AWL–03, ''Fuel Quantity Indicating System (FQIS)—Out of Tank Wiring Lightning Shield to Ground Termination'': Within 16,000 flight cycles or 3,000 days, whichever occurs first after the date of issuance of the original airworthiness certificate or the date of issuance of the original export certificate of airworthiness; or within 16,000 flight cycles or 3,000 days, whichever occurs first after the most recent inspection was performed as specified in 28–AWL–03; whichever occurs later.

(3) For AWL 28–AWL–18, ''Over-Current and Arcing Protection Electrical Design Features Operation—AC Fuel Pump GFI and GFP'': Within 375 days after the date of issuance of the original airworthiness certificate or the date of issuance of the original export certificate of airworthiness; or within 375 days after accomplishment of the actions specified in Boeing Service Bulletin 777–28A0037; or within 375 days after accomplishment of the actions specified in Boeing Service Bulletin 777–28A0038; or within 375 days after the most recent inspection was performed as specified in 28–AWL–18; whichever occurs latest.

(4) For AWL 28–AWL–21, ''External Wires Over Auxiliary Fuel Tank (Cell)'': Within 16,000 flight cycles or 3,000 days, whichever occurs first after the date of issuance of the original airworthiness certificate or date of issuance of the original export certificate of airworthiness; or within 16,000 flight cycles or 3,000 days, whichever occurs first after the most recent inspection was performed as specified in 28–AWL–21; or within 365 days after the effective date of this AD; whichever occurs latest.

(5) For AWL 28–AWL–26, ''Auxiliary Fuel Tank (Cell) AC Fuel Pump Uncommanded ON/Automatic Shutoff Circuit'': Within 375 days after the date of issuance of the original airworthiness certificate or the date of issuance of the original export certificate of airworthiness; or within 375 days after the most recent inspection was performed as specified in 28–AWL–26; or within 30 days after the effective date of this AD; whichever occurs latest.

(6) For AWL 28–AWL–32, ''Cushion Clamps and Teflon Sleeving Installed on Out-of-Tank Wire Bundles Installed on Brackets that are Mounted Directly on the Fuel Tanks'': For airplanes having L/N 1 through 503 inclusive, within 3,750 days after accomplishment of the actions specified in Boeing Service Bulletins 777–57A0050, or within 60 months after the effective date of this AD, whichever occurs later. For airplanes having L/N 504 and subsequent, within 3,750 days after the date of issuance of the original airworthiness certificate or the date of issuance of the original export certificate of airworthiness; or within 60 months after the effective date of this AD; whichever occurs later.

(7) For AWL 28–AWL–101, ''Engine Fuel Suction Feed Operational Test'': Within 7,500 flight hours after the date of issuance of the original airworthiness certificate or the date of issuance of the original export certificate of airworthiness; or within 7,500 flight hours after the most recent inspection was performed as specified in AWL No. 28–AWL–101; whichever occurs later.

(8) For AWL 47–AWL–04, ''NGS—Thermal Switch'': Within 108,000 flight hours after the date of issuance of the original airworthiness certificate or the date of issuance of the original export certificate of airworthiness; or within 108,000 flight hours after accomplishment of the actions specified in Boeing Service Bulletin 777–47–0002; or within 108,000 flight hours after the most recent inspection was performed as specified in 47–AWL–04; whichever occurs latest.

(9) For 47–AWL–05, ''NGS—Cross Vent Check Valve'': Within 10,682 flight hours after the date of issuance of the original airworthiness certificate or the date of issuance of the original export certificate of airworthiness; or within 10,682 flight hours after accomplishment of the actions specified in Boeing Service Bulletin 777–47–0002; or within 10,682 flight hours after the most recent inspection was performed as specified in 47–AWL–05; whichever occurs latest.

(10) For AWL 47–AWL–06, ''NGS—NEA Distribution Ducting Integrity'': Within 10,682 flight hours after the date of issuance of the original airworthiness certificate or the date of issuance of the original export certificate of airworthiness; or within 10,682 flight hours after accomplishment of the actions specified in Boeing Service Bulletin 777–47–0002; or within 10,682 flight hours after the most recent inspection was performed as specified in 47–AWL–06; whichever occurs latest.

(h) Additional Acceptable Wire Types and Sleeving

As an option, when accomplishing the actions required by paragraph (g) of this AD, the changes specified in paragraphs (h)(1) and (2) of this AD are acceptable.

(1) Where AWL No. 28–AWL–11 identifies wire types BMS 13–48, BMS 13–58, and BMS 13–60, the following wire types are acceptable: MIL–W–22759/16, SAE AS22759/16 (M22759/16), MIL–W–22759/32, SAE AS22759/32 (M22759/32), MIL–W–22759/34, SAE AS22759/34 (M22759/34), MIL–W–22759/41, SAE AS22759/41 (M22759/41), MIL–W–22759/86, SAE AS22759/86 (M22759/86), MIL–W–22759/87, SAE AS22759/87 (M22759/87), MIL–W–22759/92, and SAE AS22759/92 (M22759/92); and MIL–C–27500 and NEMA WC 27500 cables constructed from these military or SAE specification wire types, as applicable.

(2) Where AWL No. 28–AWL–11 identifies TFE–2X Standard wall (manufactured as specified in MIL–I–23053) for wire sleeving, the following sleeving materials are acceptable: Roundit 2000NX and Varglas Type HO, HP, or HM.

(i) No Alternative Actions, Intervals, or Critical Design Configuration Control Limitations (CDCCLs)

After the existing maintenance or inspection program has been revised as required by paragraph (g) of this AD, no alternative actions (*e.g.,* inspections), intervals, or CDCCLs may be used unless the

actions, intervals, and CDCCLs are approved as an alternative method of compliance (AMOC) in accordance with the procedures specified in paragraph (k) of this AD.

(j) Terminating Actions

Accomplishment of the revision required by paragraph (g) of this AD terminates the requirements specified in paragraphs (j)(1) and (2) of this AD for that airplane.

(1) All requirements of AD 2008–11–13 for Model 777–200, –200LR, –300, and –300ER series airplanes only.

(2) All requirements of AD 2014–09–09.

(k) Alternative Methods of Compliance (AMOCs)

(1) The Manager, Seattle ACO Branch, FAA, has the authority to approve AMOCs for this AD, if requested using the procedures found in 14 CFR 39.19. In accordance with 14 CFR 39.19, send your request to your principal inspector or responsible Flight Standards Office, as appropriate. If sending information directly to the manager of the certification office, send it to the attention of the person identified in paragraph (l)(1) of this AD. Information may be emailed to: *9-ANM-Seattle-ACO-AMOC-Requests@faa.gov.*

(2) Before using any approved AMOC, notify your appropriate principal inspector, or lacking a principal inspector, the manager of the responsible Flight Standards Office.

(3) An AMOC that provides an acceptable level of safety may be used for any repair, modification, or alteration required by this AD if it is approved by The Boeing Company Organization Designation Authorization (ODA) that has been authorized by the Manager, Seattle ACO Branch, FAA, to make those findings. To be approved, the repair method, modification deviation, or alteration deviation must meet the certification basis of the airplane, and the approval must specifically refer to this AD.

(l) Related Information

(1) For more information about this AD, contact Kevin Nguyen, Aerospace Engineer, Propulsion Section, FAA, Seattle ACO Branch, 2200 South 216th St., Des Moines, WA 98198; phone and fax: 206–231–3555; email: *kevin.nguyen@faa.gov.*

(2) For service information identified in this AD, contact Boeing Commercial Airplanes, Attention: Contractual & Data Services (C&DS), 2600 Westminster Blvd., MC 110–SK57, Seal Beach, CA 90740–5600; telephone 562–797–1717; internet *https://www.myboeingfleet.com.* You may view this service information at the FAA, Airworthiness Products Section, Operational Safety Branch, 2200 South 216th St., Des Moines, WA. For information on the availability of this material at the FAA, call 206–231–3195.

Issued on March 2, 2021.

Lance T. Gant,

Director, Compliance & Airworthiness Division, Aircraft Certification Service.

[FR Doc. 2021–06022 Filed 3–25–21; 8:45 am]

BILLING CODE 4910–13–P

DEPARTMENT OF TRANSPORTATION

Federal Aviation Administration

14 CFR Part 39

[Docket No. FAA–2021–0191; Project Identifier AD–2020–01492–E]

RIN 2120–AA64

Airworthiness Directives; Pratt & Whitney Turbofan Engines

AGENCY: Federal Aviation Administration (FAA), DOT.

ACTION: Notice of proposed rulemaking (NPRM).

SUMMARY: The FAA proposes to supersede Airworthiness Directive (AD) 2019–21–11 and AD 2020–07–02. AD 2019–21–11 applies to all Pratt & Whitney (PW) PW1519G, PW1521G, PW1521G–3, PW1521GA, PW1524G, PW1524G–3, PW1525G, PW1525G–3, PW1919G, PW1921G, PW1922G, PW1923G, and PW1923G–A model turbofan engines. AD 2020–07–02 applies to all PW PW1519G, PW1521G, PW1521G–3, PW1521GA, PW1524G, PW1524G–3, PW1525G, and PW1525G–3 model turbofan engines. AD 2019–21–11 requires initial and repetitive borescope inspections (BSIs) of the low-pressure compressor (LPC) rotor 1 (R1) and, depending on the results of the inspections, replacement of the LPC. AD 2020–07–02 requires the removal from service of certain electronic engine control (EEC) full authority digital electronic control (FADEC) software and the installation of a software version eligible for installation. Since the FAA issued AD 2019–21–11 and AD 2020–07–02, the manufacturer developed a new version of EEC FADEC software, which terminates the need for repetitive BSIs of the LPC R1. This proposed AD would continue to require repetitive BSIs of certain LPC R1s until replacement of EEC FADEC software with the updated software. This proposed AD would require a BSI after installation of the updated EEC FADEC software if certain Onboard Maintenance Message fault codes are displayed and meet specified criteria. The FAA is proposing this AD to address the unsafe condition on these products.

DATES: The FAA must receive comments on this proposed AD by May 10, 2021.

ADDRESSES: You may send comments, using the procedures found in 14 CFR 11.43 and 11.45, by any of the following methods:

- *Federal eRulemaking Portal:* Go to *https://www.regulations.gov.* Follow the instructions for submitting comments.
- *Fax:* (202) 493–2251.
- *Mail:* U.S. Department of Transportation, Docket Operations, M–30, West Building Ground Floor, Room W12–140, 1200 New Jersey Avenue SE, Washington, DC 20590.
- *Hand Delivery:* Deliver to Mail address above between 9 a.m. and 5 p.m., Monday through Friday, except Federal holidays.

For service information identified in this NPRM, contact Pratt & Whitney, 400 Main Street, East Hartford, CT 06118; phone: (800) 565–0140; email: *help24@pw.utc.com*; website: *http://fleetcare.pw.utc.com.* You may view this service information at the FAA, Airworthiness Products Section, Operational Safety Branch, 1200 District Avenue, Burlington, MA 01803. For information on the availability of this material at the FAA, call (781) 238–7759.

Examining the AD Docket

You may examine the AD docket at *https://www.regulations.gov* by searching for and locating Docket No. FAA–2021–0191; or in person at Docket Operations between 9 a.m. and 5 p.m., Monday through Friday, except Federal holidays. The AD docket contains this NPRM, any comments received, and other information. The street address for Docket Operations is listed above.

FOR FURTHER INFORMATION CONTACT: Nicholas Paine, Aviation Safety Engineer, ECO Branch, FAA, 1200 District Avenue, Burlington, MA 01803; phone: (781) 238–7116; fax: (781) 238–7199; email: *nicholas.j.paine@faa.gov.*

SUPPLEMENTARY INFORMATION:

Comments Invited

The FAA invites you to send any written relevant data, views, or arguments about this proposal. Send your comments to an address listed under **ADDRESSES**. Include ''Docket No. FAA–2021–0191; Project Identifier AD–2020–01492–E'' at the beginning of your comments. The most helpful comments reference a specific portion of the proposal, explain the reason for any recommended change, and include supporting data. The FAA will consider all comments received by the closing date and may amend the proposal because of those comments.

Except for Confidential Business Information (CBI) as described in the following paragraph, and other information as described in 14 CFR 11.35, the FAA will post all comments received, without change, to *https://www.regulations.gov,* including any personal information you provide. The agency will also post a report

summarizing each substantive verbal contact we receive about this proposed AD.

Confidential Business Information

CBI is commercial or financial information that is both customarily and actually treated as private by its owner. Under the Freedom of Information Act (FOIA) (5 U.S.C. 552), CBI is exempt from public disclosure. If your comments responsive to this NPRM contain commercial or financial information that is customarily treated as private, that you actually treat as private, and that is relevant or responsive to this NPRM, it is important that you clearly designate the submitted comments as CBI. Please mark each page of your submission containing CBI as ''PROPIN.'' The FAA will treat such marked submissions as confidential under the FOIA, and they will not be placed in the public docket of this NPRM. Submissions containing CBI should be sent to Nicholas Paine, Aviation Safety Engineer, ECO Branch, FAA, 1200 District Avenue, Burlington, MA 01803. Any commentary that the FAA receives which is not specifically designated as CBI will be placed in the public docket for this rulemaking.

Background

The FAA issued AD 2019–21–11, Amendment 39–19777 (84 FR 57813, October 29, 2019), (AD 2019–21–11) for certain PW PW1519G, PW1521G, PW1521GA, PW1524G, PW1525G, PW1521G–3, PW1524G–3, PW1525G–3, PW1919G, PW1921G, PW1922G, PW1923G, and PW1923G–A model turbofan engines. AD 2019–21–11 was prompted by an in-flight failure and additional findings of cracks in the LPC R1. AD 2019–21–11 requires initial and repetitive BSI of the LPC R1 and, depending on the results of the BSIs, replacement of the LPC. The agency issued AD 2019–21–11 to prevent failure of the LPC R1.

The FAA issued AD 2020–07–02, Amendment 39–21106 (85 FR 17742, March 31, 2020), (AD 2020–07–02), for all PW PW1519G, PW1521G, PW1521G–3, PW1521GA, PW1524G, PW1524G33, PW1525G, and PW1525G33 model turbofan engines. AD 2020–07–02 was prompted by reports of four in-flight shutdowns due to failure of the LPC R1 and by subsequent findings of cracked LPC R1s during inspections. AD 2020–07–02 requires the removal from service of certain EEC FADEC software and the installation of a software version eligible for installation. The agency issued AD 2020–07–02 to prevent failure of the LPC R1.

Actions Since AD 2019–21–11 and AD 2020–07–02 Were Issued

Since the FAA issued AD 2019–21–11 and AD 2020–07–02, the manufacturer performed further root cause analysis of the LPC R1 failures and determined the need to update the EEC FADEC software to automate rotor speed management and limit the maximum climb and maximum continuous thrust ratings.

FAA's Determination

The FAA is issuing this NPRM after determining that the unsafe condition described previously is likely to exist or develop on other products of the same type design.

Related Service Information

The FAA reviewed Pratt & Whitney Service Bulletin (SB) PW1000G–A–72–00–0125–00A–930A–D, Issue No. 002, dated October 24, 2019; Pratt & Whitney SB PW1000G–A–72–00–0075–00B–930A–D, Issue No. 003, dated October 24, 2019; Pratt & Whitney SB PW1000G–A–73–00–0044–00A–930A–D, Issue No. 004, dated February 23, 2021; and Pratt & Whitney SB PW1000G–A–73–00–0023–00B–930A–D, Issue No. 002, dated February 22, 2021. The FAA also reviewed Section PW1000G–A–72–00–00–02A–0B5A–A of Pratt & Whitney Engine Maintenance Manual (EMM), Issue No. 016, dated January 15, 2021; and Section PW1000G–A–72–31–00–00A–312A–D of Pratt & Whitney EMM, Issue No. 016, dated January 11, 2021.

Pratt & Whitney SBs PW1000G–A–72–00–0125–00A–930A–D, Issue No. 002, dated October 24, 2019, and PW1000G–A–72–00–0075–00B–930A–D, Issue No. 003, dated October 24, 2019, specify procedures for performing initial and repetitive BSI of certain LPC R1s. Pratt & Whitney SB PW1000G–A–73–00–0044–00A–930A–D, Issue No. 004, dated February 23, 2021, specifies procedures for replacing or modifying the EEC to incorporate EEC FADEC software version V2.11.10.4. Pratt & Whitney SB PW1000G–A–73–00–0023–00B–930A–D, Issue No. 002, dated February 22, 2021, specifies procedures for replacing or modifying the EEC to incorporate EEC FADEC software version V9.5.6.7.

Section PW1000G–A–72–00–00–02A–0B5A–A of Pratt & Whitney EMM, Issue No. 016, dated January 15, 2021, specifies procedures for inspecting the engine for possible engine damage after receiving notification of an N1 or N2 overspeed operation. Section PW1000G–A–72–31–00–00A–312A–D of Pratt & Whitney EMM, Issue No. 016, dated January 11, 2021, specifies procedures for performing a BSI of the LPC.

Proposed AD Requirements in This NPRM

This proposed AD would retain certain requirements of AD 2019–21–11 and none of the requirements of AD 2020–07–02. This proposed AD would continue to require a BSI of certain LPC R1s for damage and cracks and, depending on the results of the BSI, replacement of the LPC R1. This proposed AD would continue to require repetitive BSIs of certain LPC R1s until replacement of the EEC FADEC software with the updated software. This proposed AD would also require a BSI of the LPC R1 after installation of the updated EEC FADEC software if certain Onboard Maintenance Message fault codes are displayed and meet specified criteria.

Interim Action

The FAA considers that this proposed AD would be an interim action. If final corrective action is later identified, the FAA might consider additional rulemaking.

Costs of Compliance

The FAA estimates that this AD, if adopted as proposed, would affect 94 engines installed on airplanes of U.S. registry.

The FAA estimates the following costs to comply with this proposed AD:

ESTIMATED COSTS

Action	Labor cost	Parts cost	Cost per product	Cost on U.S. operators
Replace EEC FADEC software	2 work-hours × $85 per hour = $170	$0	$170	$15,980
BSI per inspection cycle	2 work-hours × $85 per hour = $170	0	170	15,980

ON-CONDITION COSTS

Action	Labor cost	Parts cost	Cost per product
Replace LPC R1	40 work-hours × per $85 hour = $3,400	$156,000	$159,000
BSI of the LPC R1 if Onboard Maintenance Message fault codes are displayed.	2 work-hours × $85 per hour = $170	0	170

The FAA has included all known costs in its cost estimate. According to the manufacturer, however, some of the costs of this proposed AD may be covered under warranty, thereby reducing the cost impact on affected individuals.

Authority for This Rulemaking

Title 49 of the United States Code specifies the FAA's authority to issue rules on aviation safety. Subtitle I, Section 106, describes the authority of the FAA Administrator. Subtitle VII, Aviation Programs, describes in more detail the scope of the Agency's authority.

The FAA is issuing this rulemaking under the authority described in Subtitle VII, Part A, Subpart III, Section 44701, General requirements. Under that section, Congress charges the FAA with promoting safe flight of civil aircraft in air commerce by prescribing regulations for practices, methods, and procedures the Administrator finds necessary for safety in air commerce. This regulation is within the scope of that authority because it addresses an unsafe condition that is likely to exist or develop on products identified in this rulemaking action.

Regulatory Findings

The FAA determined that this proposed AD would not have federalism implications under Executive Order 13132. This proposed AD would not have a substantial direct effect on the States, on the relationship between the national Government and the States, or on the distribution of power and responsibilities among the various levels of government.

For the reasons discussed above, I certify that the proposed regulation:

(1) Is not a ''significant regulatory action'' under Executive Order 12866,

(2) Would not affect intrastate aviation in Alaska, and

(3) Would not have a significant economic impact, positive or negative, on a substantial number of small entities under the criteria of the Regulatory Flexibility Act.

List of Subjects in 14 CFR Part 39

Air transportation, Aircraft, Aviation safety, Incorporation by reference, Safety.

The Proposed Amendment

Accordingly, under the authority delegated to me by the Administrator, the FAA proposes to amend 14 CFR part 39 as follows:

PART 39—AIRWORTHINESS DIRECTIVES

■ 1. The authority citation for part 39 continues to read as follows:

Authority: 49 U.S.C. 106(g), 40113, 44701.

§ 39.13 [Amended]

■ 2. The FAA amends § 39.13 by:

■ a. Removing Airworthiness Directive 2019–21–11, Amendment 39–19777 (84 FR 57813, October 29, 2019); and Airworthiness Directive AD 2020–07–02, Amendment 39–21106 (85 FR 17742, March 31, 2020); and

■ b. Adding the following new airworthiness directive:

Pratt & Whitney: Docket No. FAA–2021–0191; Project Identifier AD–2020–01492–E.

(a) Comments Due Date

The FAA must receive comments on this airworthiness directive (AD) action by May 10, 2021.

(b) Affected ADs

This AD replaces AD 2019–21–11 Amendment 39–19777 (84 FR 57813, October 29, 2019); and AD 2020–07–02, Amendment 39–21106 (85 FR 17742, March 31, 2020).

(c) Applicability

This AD applies to Pratt & Whitney (PW) PW1519G, PW1521G, PW1521G–3, PW1521GA, PW1524G, PW1524G–3, PW1525G, PW1525G–3, PW1919G, PW1921G, PW1922G, PW1923G, and PW1923G–A model turbofan engines.

(d) Subject

Joint Aircraft System Component (JASC) Code 7230, Turbine Engine Compressor Section.

(e) Unsafe Condition

This AD was prompted by reports of in-flight shutdowns due to failure of the low-pressure compressor (LPC) rotor 1 (R1) and by subsequent findings of cracked LPC R1s during inspection. The FAA is issuing this AD to prevent failure of the LPC R1. The unsafe condition, if not addressed, could result in uncontained release of the LPC R1, damage to the engine, damage to the airplane, and loss of control of the airplane.

(f) Compliance

Comply with this AD within the compliance times specified, unless already done.

(g) Required Actions

(1) Except for those model turbofan engines identified in paragraph (g)(2) of this AD, perform a borescope inspection (BSI) of the LPC R1 for damage and cracks as follows:

(i) For engines that have accumulated fewer than 300 flight cycles since new (CSN), perform a BSI within 50 flight cycles (FCs) from October 29, 2019 (the effective date of AD 2019–19–11), or before further flight, whichever occurs later.

(ii) For engines that have accumulated fewer than 300 FCs since installation of V2.11.7 or V2.11.8 electronic engine control (EEC) full authority digital electronic control (FADEC) software, perform a BSI within 50 FCs from October 29, 2019, or before further flight, whichever occurs later.

(iii) Thereafter, at intervals not to exceed 50 FCs until the engine accumulates 300 flight CSN or accumulates 300 FCs since the installation of V2.11.7 or V2.11.8 EEC FADEC software, whichever occurs later, repeat the BSI for damage and cracks.

(iv) Perform the BSI required by paragraphs (g)(1)(i) through (iii) of this AD at the following LPC R1 locations:

(A) The blade tip;

(B) The leading edge;

(C) The leading edge fillet to rotor platform radius; and

(D) The airfoil convex side root fillet to rotor platform radius.

(2) For any affected PW model turbofan engine installed as a ''zero time spare,'' except for PW1519G, PW1521GA, PW1919G, and PW1922G model turbofan engines, within 15 FCs from the effective date of this AD, and thereafter at intervals not to exceed 15 FCs until the engine accumulates 300 flight CSN, perform a BSI of the LPC R1 for damage and cracks at the locations in paragraph (g)(1)(iv) of this AD.

(3) Based on the results of the BSIs required by paragraphs (g)(1) and (2) of this AD, before further flight, remove and replace the LPC R1 if:

(i) There is damage on an LPC R1 that exceeds serviceable limits; or

(ii) Any crack in the LPC R1 exists.

Note 1 to paragraph (g)(3): Guidance on determining the serviceable limits in paragraph (g)(3) of this AD can be found in PW Service Bulletin (SB) PW1000G–A–72–00–0125–00A–930A–D, Issue No. 002, dated October 24, 2019, and PW SB PW1000G–A–72–00–0075–00B–930A–D, Issue No. 003, dated October 24, 2019.

(4) For PW PW1519G, PW1521G, PW1521G–3, PW1521GA, PW1524G,

PW1524G–3, PW1525G, and PW1525G–3 model turbofan engines, within 120 days from the effective date of this AD, remove the EEC FADEC software if the version is earlier than EEC FADEC software version V2.11.10.4 and install EEC FADEC software that is eligible for installation.

(5) For PW PW1919G, PW1921G, PW1922G, PW1923G, and PW1923G–A model turbofan engines, within 120 days of the effective date of this AD, remove the EEC FADEC software if the version is earlier than EEC FADEC software version V9.5.6.7 and install EEC FADEC software that is eligible for installation.

(6) For PW PW1519G, PW1521G, PW1521G–3, PW1521GA, PW1524G, PW1524G–3, PW1525G, and PW1525G–3 model turbofan engines with EEC FADEC software version V2.11.10.4 or later installed, within 15 FCs after receipt of Onboard Maintenance Message fault code 7100F0029 or 7100F0030, perform a BSI of the LPC R1 for damage and cracks at the locations in paragraph (g)(1)(iv) of this AD if the fault code is displayed on the ''Active Failure Messages'' and meets the following criteria:

(i) N1 Exceedance is above 95.2%;

(ii) N1 Exceedance occurred above 29,100 feet; and

(iii) N1 Exceedance occurs for a duration of 40 seconds (15 seconds of cockpit display) or more during any flight.

Note 2 to paragraph (g)(6): Guidance on determining the N1 Exceedance duration can be found in PW Section PW1000G–A–72–00–00–02A–0B5A–A of PW Engine Maintenance Manual (EMM), Issue No. 016, dated January 15, 2021.

Note 3 to paragraph (g)(6): Guidance on performing the BSI can be found in PW Section PW1000G–A–72–31–00–00A–312A–D of PW EMM, Issue No. 016, dated January 11, 2021.

(7) As the result of the BSI of the LPC R1 required by paragraph (g)(6) of this AD, before further flight, remove and replace the LPC R1 if:

(i) There is damage on an LPC R1 that exceeds serviceable limits; or

(ii) Any crack in the LPC R1 exists.

(h) Terminating Actions

(1) For PW1519G, PW1521G, PW1521G–3, PW1521GA, PW1524G, PW1524G–3, PW1525G, and PW1525G–3 model turbofan engines, the installation of EEC FADEC software required by paragraph (g)(4) of this AD terminates the repetitive BSI requirements of paragraphs (g)(1) and (2) of this AD.

(2) For PW1919G, PW1921G, PW1922G, PW1923G, and PW1923G–A model turbofan engines, the installation of EEC FADEC software required by paragraph (g)(5) of this AD terminates the repetitive BSI requirements of paragraphs (g)(1) and (2) of this AD.

(i) Installation Prohibition

After the effective date of this AD, do not install EEC FADEC software earlier than version V2.11.10.4 or version V9.5.6.7 onto any engine identified in paragraph (c) of this AD.

(j) Definitions

(1) For the purpose of this AD, a ''zero time spare'' is an engine that had zero flight hours time-in-service when it was installed on an airplane after the airplane had entered service.

(2) For the purpose of this AD, ''EEC FADEC software that is eligible for installation'' is EEC FADEC software version V2.11.10.4 or later for PW1519G, PW1521G, PW1521G–3, PW1521GA, PW1524G, PW1524G–3, PW1525G, PW1525G–3 model turbofan engines and EEC FADEC software version V9.5.6.7 or later for PW1919G, PW1921G, PW1922G, PW1923G, and PW1923G–A model turbofan engines.

(k) Alternative Methods of Compliance (AMOCs)

(1) The Manager, ECO Branch, FAA, has the authority to approve AMOCs for this AD, if requested using the procedures found in 14 CFR 39.19. In accordance with 14 CFR 39.19, send your request to your principal inspector or local Flight Standards District Office, as appropriate. If sending information directly to the manager of the certification office, send it to the attention of the person identified in Related Information. You may email your request to *ANE-AD-AMOC@faa.gov.*

(2) Before using any approved AMOC, notify your appropriate principal inspector, or lacking a principal inspector, the manager of the local flight standards district office/certificate holding district office.

(3) AMOCs approved for AD 2019–21–11 (84 FR 57813, October 29, 2019) are approved as AMOCs for the corresponding provisions of this AD except for paragraphs (g)(1)(i) through (iv) and (g)(3)(i) and (ii) of this AD.

(l) Related Information

(1) For more information about this AD, contact Nicholas Paine, Aviation Safety Engineer, ECO Branch, FAA, 1200 District Avenue, Burlington, MA 01803; phone: (781) 238–7116; fax: (781) 238–7719; email: *nicholas.j.paine@faa.gov.*

(2) For service information identified in this AD, contact Pratt & Whitney, 400 Main Street, East Hartford, CT, 06118; phone: (800) 565–0140; email: *help24@pw.utc.com;* website: *http://fleetcare.pw.utc.com.* You may view this referenced service information at the FAA, Airworthiness Products Section, Operational Safety Branch, 1200 District Avenue, Burlington, MA 01803. For information on the availability of this material at the FAA, call (781) 238–7759.

Issued on March 18, 2021.

Lance T. Gant,

Director, Compliance & Airworthiness Division, Aircraft Certification Service.

[FR Doc. 2021–06024 Filed 3–25–21; 8:45 am]

BILLING CODE 4910–13–P

SUSQUEHANNA RIVER BASIN COMMISSION

18 CFR Part 806

Review and Approval of Projects

AGENCY: Susquehanna River Basin Commission.

ACTION: Notice of proposed rulemaking; notice of public hearing.

SUMMARY: This document contains proposed rules that would amend the regulations of the Susquehanna River Basin Commission (Commission) to update the requirements and standards for review of projects, amend the rules dealing with groundwater withdrawals, and revise the regulatory triggers related to grandfathered sources. These rules are designed to enhance and improve the Commission's existing authorities to manage the water resources of the basin, add regulatory clarity, and to achieve efficiencies and reduced costs in the preparation and review of applications for groundwater renewals.

DATES: Comments on the proposed rulemaking may be submitted to the Commission on or before May 17, 2021. The Commission has scheduled a public hearing on the proposed rulemaking to be held by telephone on May 6, 2021. The location of the public hearing is listed in the **ADDRESSES** section of this document.

In addition, the Commission will be hold two informational webinars explaining the proposed rulemaking on April 6 and April 14, 2021. Instructions for registration for the webinars will be posted on the Commission's website.

ADDRESSES: Comments may be mailed to: Jason E. Oyler, Esq., General Counsel, Susquehanna River Basin Commission, 4423 N Front Street, Harrisburg, PA 17110–1788, or by email to *regcomments@srbc.net.* The public hearing will be held by telephone rather than at a physical location. Conference Call # 1–888–387–8686, the Conference Room Code # 9179686050.

Those wishing to testify are asked to notify the Commission in advance, if possible, at the regular or electronic addresses given below.

FOR FURTHER INFORMATION CONTACT: Jason E. Oyler, Esq., General Counsel, telephone: 717–238–0423, ext. 1312; fax: 717–238–2436; email: *joyler@srbc.net.* Also, for further information on the proposed rulemaking, visit the Commission's website at *http://www.srbc.net.*

SUPPLEMENTARY INFORMATION: The Commission is proposing revisions to amend several sections of its regulations

to provide clarity to project sponsors, target only the most appropriate activities, and establish a more efficient and effective framework to review groundwater withdrawals, which can be data-intensive and time consuming and costly for both the Commission and the project sponsor. The proposed revisions also modify the aquifer testing requirements to include an Alternative Hydrogeologic Evaluation(AHE) process for certain new and existing projects and establishes where an aquifer test or AHE evaluation is not required. As a companion to this rulemaking, the Commission is also releasing three policies related to groundwater reviews to be open for public comment simultaneously with this proposed rulemaking: A revised Aquifer Testing Plan Guidance; a new policy on Alternative Hydrogeologic Evaluations; and a new policy on Pre-Drill Well Site Review. The Commission recognizes that groundwater management will be a challenge under changing climate conditions. These rules will ensure wells are permitted and monitored in efficient but robust ways that allow the Commission to provide dynamic decision making as impacts of climate change manifest. Further, the proposed rules and policies will help reduce costs, both to systems that are smaller and have economic challenges, including communities with environmental justice concerns.

The Commission is also proposing revisions to update its regulations dealing with the triggers that lead to the loss of grandfathering, consumptive water use by the natural gas industry, the transfer of projects, as well as general updates to its project review application procedures.

In recognition of the Commission's priority of pursuing environmental justice initiatives, Commission staff will conduct inclusive outreach on this proposal to maximize public awareness and participation in the rulemaking process by underrepresented communities.

Definitions—Small and Medium Capacity Withdrawals—18 CFR 806.3

Definitions of small and medium capacity sources are added to 18 CFR 806.3. The jurisdictional limit for Commission review of a withdrawal is 100,000 gallons per day (gpd) over a consecutive 30-day average. However, over time, the regulations developed various mechanisms that also apply the Commission's regulatory oversight to small (under 20,000 gpd) and medium (between 20,000 and 100,000 gpd) capacity withdrawals. Current groundwater regulations, policy, and review standards subject these sources to the same level of review and associated cost implications as large volume withdrawals, regardless of their potential risk of adverse impact. The new definitions and classification of withdrawals based on size clarifies, and in some cases, reduces the level of effort by a project sponsor to seek approval to use small and medium capacity sources as well as reduces the level of review by the Commission based on the potential risk for adverse impact. To the extent these sources in some cases are utilized by smaller communities with financial challenges and serving disadvantaged communities, it will provide more flexibility moving forward for the Commission to consider appropriate measures for such consideration.

Projects Requiring Review and Approval—18 CFR 806.4

Changes are proposed to § 806.4 regarding projects requiring review and approval. The proposed revisions eliminate § 806.4(a)(2)(iii) that captures small and medium capacity sources supplying water to a regulated consumptive user. New language has been proposed to § 806.4(a)(1) clarifying the regulatory requirements for small and medium capacity withdrawals related to a consumptive use approval.

Constant-Rate Aquifer Testing and Standards for Water Withdrawals—18 CFR 806.12 & 806.23

The Commission is seeking to revise the scope of its constant-rate aquifer testing requirements and standards for groundwater withdrawals to encourage the use of existing data and review projects in a manner commensurate with the level of risk posed by a withdrawal. The proposed processes will allow the Commission's review to more adequately consider data and information that include changing conditions in the environment and with climate to allow for more sustainable and resilient withdrawals.

First, as related to small capacity sources, the Commission finds that their size significantly limits the likelihood of adverse impacts to aquifers, surface water features or competing water users and the Commission is able to utilize methods other than aquifer testing to assess the impact of withdrawal from these small sources. Accordingly, the rule proposes § 806.12(j) to provide that these small capacity sources do not generally need an aquifer test, but does retain the flexibility for the Executive Director to determine that one is needed for evaluation of resource issues in limited circumstances. Similarly, § 806.23(b)(7) is proposed to provide more focused standards for small capacity sources.

Second, existing groundwater regulations, policy and review standards include limited differentiation for renewals versus proposed new withdrawals. This lack of differentiation limits effective consideration of previous aquifer testing results and long-term operational data for some existing projects, resulting in increased renewal costs to regulated projects and the Commission. The proposed rules provide better clarity and the streamlining of review standards, especially if the project sponsor is not changing its withdrawal quantities as part of the renewal. The rule proposes a new paragraph, § 806.12(h), which provides that projects undergoing a renewal with the Commission that have also previously completed an aquifer test under the Commission's approval can satisfy the aquifer testing requirement by relying on the prior test and providing an updated groundwater availability estimate. This is conditioned on the project sponsor seeking to operate at the previously tested rate of withdrawal. Section 806.23(b)(6) is proposed to provide more differentiation between reviews for renewed or otherwise existing sources versus new projects. This differentiation includes relying on prior testing and operational data of existing projects, as well as the alternative hydrogeologic evaluation established in § 806.12(i) and the related guidance document also proposed. The proposed rule also enshrines the Commission's current flexibility to require an aquifer test and/or condition docket approvals.

Third, as related to aquifer testing and an aquifer testing waiver, existing regulation, unless formally waived, requires aquifer testing of all groundwater wells regardless of setting, size of withdrawal, available data, and status as a new, renewing or existing source. The existing waiver process used to avoid aquifer testing is not well understood by projects or consultants and frequently leads to increased costs to both the Commission and projects due to confusion about the process and incomplete submittals. The proposed rule amends § 806.12 to improve this process by adding clarity and more certainty for project sponsors but retaining the flexibility that the Commission currently has in these reviews. Section 806.12(i) is added to provide for the Alternative Hydrogeologic Evaluation (AHE) process to replace the previous waiver process. The Commission is also proposing a draft AHE policy and a revised Aquifer Testing Guidance that

provide further clarity and a revised technical approach for these evaluations.

Finally, § 806.12(g) establishes that the hydrogeologic evaluation requirements in § 806.12 do not apply to withdrawals related to mine dewatering, construction dewatering, water resources remediation and acid mine drainage (AMD) remediation facilities to support the existing regulatory review provisions for these types of facilities codified in § 806.14(b)(6), (d)(6) and 806.23(b)(5). Mining and remediation projects in particular are heavily regulated by our member jurisdictions, and the proposed rule would allow the Commission to rely on the work previously done in order to get member jurisdiction approval for these activities.

Contents of Application—18 CFR 806.14

The proposed rule offers edits to § 806.14 to clarify and improve the readability of the regulation and to account for the changes to § 806.12. These changes generally fall into two categories: (1) Those that increase efficiency through simplification and clarification and (2) those that establish updated requirements for how groundwater applicants provide data and information required by § 806.12. The changes recognize prior determinations (including waivers of § 806.12) by the Commission staff which establish clear requirements for projects in those situations, remove uncertainty regarding previous determinations of aquifer testing requirements, and increase efficiency for both application preparation and the review of renewal and modification applications by Commission staff. These changes will greatly help projects by allowing them to avoid additional unnecessary aquifer testing or data collection, especially in those situations where the requirements had been previously met. These changes are important with the larger number of projects that will be seeking renewals for the first time over the next ten years.

Projects Requiring Review and Approval & Transfer of Approvals—18 CFR 806.4 & 806.6

Grandfathering, the exemption for certain pre-existing projects to operate without formal review and approval, can be lost by a variety of mechanisms. The Commission has been overseeing the successful implementation of its grandfathering registration program. This program was developed to help track an estimated one billion gallons of water use a day by grandfathered projects, while allowing them to preserve the grandfathered status of their consumptive uses and withdrawals through registration with the Commission. This program has been successfully filling in the data gaps created by grandfathered projects and is thus a valuable effort in the improvement of the water management of the basin. With this program in place, the Commission proposes to eliminate most of the current triggers for losing grandfathering and retain just two: (1) Increasing the usage above the registered amount and (2) through a transfer of ownership.

First, minor changes are proposed to §§ 806.4(a)(1)(iii) and 806.4(a)(2)(iv) to reflect the closing of the grandfathering registration window. Because the term ''pre-compact consumptive use'' is defined, it is added to Section 806.4(a)(1)(iii). Similarly, the regulatory trigger dates are no longer needed in Section 806.4(a)(2)(iv); however, they were relocated to § 806.4(a)(2)(i) because they still have regulatory significance and cannot be eliminated altogether.

Second, section 806.4(a)(2)(ii) is revised to remove the language that acted as a trigger for the loss of grandfathering when a source was added or any source of a project was increased in quantity. The language related to the review of increases to existing sources is removed from (a)(2)(ii) and is now contained in the revised § 806.4(a)(2)(iii). The revised § 806.4(a)(2)(ii) provides that a regulated project that adds a new source must make an application for review and approval *of that source,* but it does not serve as a trigger for loss of grandfathering and subject the entire project to review, as it previously did. Similarly, revised § 806.4(a)(2)(iii) provides that any previously approved withdrawal that increases above its approval amount must make an application for review and approval of the increased amount. However, this increase does not subject the entire project to review and approval, as it previously did, which was also a trigger for loss of grandfathering.

Third, for diversions, minor adjustments to §§ 806.4(a)(3)(iii) and (iv) were needed to make the provisions related to grandfathered diversions be consistent with the changes made to grandfathered withdrawals and consumptive uses.

Fourth, change of ownership remains a pathway for the loss of grandfathering under §§ 806.4(a)(1)(iv), (a)(2)(v), and (a)(3)(iv). This is also reflected in § 806.6(b). All of these provisions are simplified and revised to reflect that the grandfathering registration period is now closed.

Fifth, a new paragraph § 806.6(d) is added to provide the new sponsor of a transferred project time to collect operational data that would allow it to take advantage of the AHE and not have to immediately prepare applications for the source(s) that have lost grandfathering. These changes are also consistent with the direction provided by the Commissioners in Resolution 2017–12 related to inter-municipal transfers.

Under the proposed rule, a new project owner with registered grandfathered sources undergoing a qualified change in ownership would be required to comply with the existing monitoring requirements under § 806.30 for all sources, along with any other conditions necessary to effectuate the transfer. Additionally, for any unapproved sources, the approved transfer will act as the project's approval for a period of five years, at which point, the project sponsor must submit an application for review and approval of the sources. This would provide ample time for the new project sponsor to collect operational data for these existing sources and potentially avoid the cost of an aquifer test.

Related to transfers, the proposed rule eliminates the corporate reorganization exception in § 806.4(b). This exception caused confusion to project sponsors, was difficult to implement and was infrequently used.

Standards for Consumptive Uses of Water for Natural Gas Projects—18 CFR 806.22(f)

Section 806.22(f) is amended to update the Commission's regulation of consumptive waster use for unconventional natural gas extraction. Commission staff conducted an internal review of processes and procedures used by its Approval by Rule program and has developed these changes to update the regulations to address the evolution of this program and the industry.

Section 806.22(f)(11)(ii) is amended to include captured stormwater, which includes corresponding changes to § 806.4(a)(3)(v) through (vii) and adding a definition of ''captured stormwater'' to § 806.3. The purpose of this change is to make clear that this captured stormwater is covered under the Commission's regulatory approvals, which is consistent with how these regulations have been interpreted.

The proposed rule also eliminates the concept of ''hydrocarbon water storage facilities'' from the regulations. There are two reasons for this change. First, this concept was developed early on in the Commission's initial response to the

development of the unconventional natural gas industry. However, the industry's water use evolved in a manner where approvals of this type were never issued by the Commission. Second, the Commission began regulating and tracking consumptive use by the natural gas industry at the source of withdrawal. This method of tracking has proven itself to be effective and enforceable and obviates the need for the water storage facility provisions, both now and in the future. Accordingly, the Commission is proposing corresponding changes to §§ 806.3, 806.22(f)(11)(iv), and 806.22(f)(14).

Section 806.22(f)(4) is revised to eliminate some of the specific details for what is ultimately captured in the post-hydrofracture report. This report is still required; however, this revision makes it easier for the Commission to revise the items requested in the report and the Commission intends to align this report with the post-drilling completion reports filed with the member jurisdictions to avoid any duplication of effort.

Sections 806.22(f)(12) and (13) are amended to track and support the Commission's current practices with respect to the use of non-public and public water suppliers by the natural gas industry as a source for water.

Other Changes

Interconnections. The Commission is proposing to eliminate language in § 806.4(a)(2) that subjected public water supply interconnections to specific review and approval requirements. The Commission is adding language dealing with interconnections as a part of a project in its review standards for water withdrawals in § 806.23. Public water supply interconnections are closely regulated by member jurisdictions and these revisions allow the Commission to avoid any duplication of effort.

Diversions for Municipalities on the Basin Divide. The proposed rule adds a paragraph § 806.4(a)(3)(viii) that would allow the diversion of drinking water or sewage into or out of the basin without applying for approval from the Commission. The diversion would have to be by or through a publicly or privately owned public water supplier or wastewater treatment works and, for out of basin diversions, service a municipality that was on or adjacent to the basin divide in order to be eligible for the exemption. The primary purpose of the Commission's regulations for reviewing diversions of water into the basin is to ensure that the water quality of the incoming water is not a threat to affect the water quality of the water resources of the basin. Where municipalities may cross the basin divide for the operation of drinking water and wastewater systems that are regulated by the member jurisdictions, any water quality concerns are fully mitigated by the regulatory oversight of the member jurisdictions and additional review by the Commission is unnecessary.

Notice Provisions. Changes are proposed to § 806.15 to clarify, update, and improve the readability of the regulation, as well as to align the notice requirements for applications for minor modifications, notices of intent (NOIs) for general permits, approvals by rule under § 806.22(e), approvals by rule (ABR) under § 806.22(f)(9) and source approvals under § 806.22(f)(13). The notice requirements in existing §§ 806.15(d), (e) and (f) are deleted and consolidated in part in a new § 806.15(g). The notice for groundwater withdrawals under § 806.15(b)(1) is revised to provide notice to property owners within a quarter mile radius of the withdrawal.

Minor Modifications. In 2015, the Commission added § 806.18 providing a process for minor modifications. This addition has been successful in creating an efficient method for the Commission to process changes to its approvals that are primarily administrative and do not rise to the level of major modifications. Based on the Commission's experience since 2015, it is proposing to modify and add new categories of changes that would qualify as minor modifications. The addition of §§ 806.18(c)(10) and (11) also aid in the implementation of the Consumptive Use Mitigation Policy adopted in March 2020.

Consumptive Use Approvals—ABR(e). Consumptive users who are entirely sourced by public water supply, stormwater, wastewater, or reused or recycled water are eligible for a streamlined approval by rule under § 806.22(e). Section 806.22(e)(6) is revised to allow for discontinuance as a consumptive use mitigation option for these approvals to be consistent with and support the recently adopted Consumptive Use Mitigation Policy. Section 806.22(e)(8) is revised to allow the Executive Director to permit a project sponsor to continue to use the ABR(e) process if they use a small capacity well for consumptive use or for use only for supply of potable water. These small wells are below the Commission's regulatory thresholds and their use should not be a reason to disallow the use of the ABR(e) process for project sponsors who use them to service their facilities.

Emergency Certificates. Section 806.34 is revised to allow an emergency certificate to be issued by the Executive Director for a term that allows the Commission to place the extension of a certificate on its public hearing notice. Currently, the rule requires that these certificates are valid until the next scheduled Commission meeting where they can be extended by the Commissioners, but typically this occurs after the public hearing has already been noticed and held. This change allows for greater public input and transparency when the project sponsor seeks the Commission's approval to extend the term of these certificates for a longer period of time.

List of Subjects in 18 CFR Part 806

Administrative practice and procedure, Water resources.

Accordingly, for the reasons set forth in the preamble, the Susquehanna River Basin Commission proposes to amend 18 CFR part 806 as follows:

PART 806—REVIEW AND APPROVAL OF PROJECTS

■ 1. The authority citation for part 806 continues to read as follows:

Authority: Secs. 3.4, 3.5(5), 3.8, 3.10 and 15.2, Pub. L. 91–575, 84 Stat. 1509 *et seq.*

■ 2. In § 806.3:

■ a. Add, in alphabetical order, the definition for ''Captured stormwater'';

■ b. Remove the definition of ''Hydrocarbon water storage facility''; and

■ c. Add, in alphabetical order, the definitions for ''Medium capacity source'' and ''Small capacity source''.

The additions and revisions read as follows:

§ 806.3 Definitions.

* * * * *

Captured stormwater. Precipitation or stormwater collected on the drilling pad site, including well cellar water, waters from secondary containment, and water collected from post construction stormwater management features.

* * * * *

Medium capacity source. A ground or surface water source with a withdrawal of more than 20,000 but less than 100,000 gallons per day over a consecutive 30 day-average.

* * * * *

Small capacity source. A ground or surface water source with a withdrawal of 20,000 gallons or less per day over a consecutive 30-day average.

* * * * *

■ 3. Revise § 806.4 to read as follows:

§ 806.4 Projects requiring review and approval.

(a) Except for activities relating to site evaluation, to aquifer testing under § 806.12 or to those activities authorized under § 806.34, no person shall undertake any of the following projects without prior review and approval by the Commission. The project sponsor shall submit an application in accordance with subpart B of this part and shall be subject to the applicable standards in subpart C of this part.

(1) *Consumptive use of water.* Any consumptive use project described in this paragraph (a)(1) shall require an application to be submitted in accordance with § 806.13, and shall be subject to the standards set forth in § 806.22, and, to the extent that it involves a withdrawal from groundwater or surface water except a small capacity source, shall also be subject to the standards set forth in § 806.23 as the Commission deems necessary. Except to the extent that they involve the diversion of the waters of the basin, public water supplies shall be exempt from the requirements of this section regarding consumptive use; provided, however, that nothing in this section shall be construed to exempt individual consumptive users connected to any such public water supply from the requirements of this section. Provided the commission determines that low flow augmentation projects sponsored by the commission's member states provide sufficient mitigation for agricultural water use to meet the standards set forth in § 806.22, and except as otherwise provided in this paragraph (a)(1), agricultural water use projects shall not be subject to the requirements of this paragraph (a)(1). Notwithstanding the foregoing, an agricultural water use project involving a diversion of the waters of the basin shall be subject to such requirements unless the property, or contiguous parcels of property, upon which the agricultural water use project occurs is located at least partially within the basin.

(i) Any project initiated on or after January 23, 1971, involving a consumptive water use of an average of 20,000 gallons per day (gpd) or more in any consecutive 30-day period.

(ii) With respect to projects previously approved by the Commission for consumptive use, any project that will involve an increase in a consumptive use above that amount which was previously approved.

(iii) With respect to projects with pre-compact consumptive use:

(A) Registered in accordance with subpart E of this part that increases its consumptive use by any amount over the quantity determined under § 806.44;

(B) Increasing its consumptive use to an average of 20,000 gpd or more in any consecutive 30-day period; or

(C) That failed to register its consumptive use in accordance with subpart E of this part.

(iv) Any project, regardless of when initiated, involving a consumptive use of an average of 20,000 gpd or more in any consecutive 30-day period, and undergoing a change of ownership, unless such project satisfies the requirements of paragraph (b) of this section or the existing Commission approval for such project is transferred pursuant to § 806.6.

(2) *Withdrawals.* Any project, including all of its sources, described in this paragraph (a)(2) shall require an application to be submitted in accordance with § 806.13, and shall be subject to the standards set forth in §§ 806.21 and 806.23. Hydroelectric projects, except to the extent that such projects involve a withdrawal, shall be exempt from the requirements of this section regarding withdrawals; provided, however, that nothing in this paragraph (a)(2) shall be construed as exempting hydroelectric projects from review and approval under any other category of project requiring review and approval as set forth in this section, § 806.5, or 18 CFR part 801.

(i) Any project initiated on or after July 13, 1978 for groundwater or November 11, 1995 for surface water withdrawing a consecutive 30-day average of 100,000 gpd or more from a groundwater or surface water source, or any project initiated after January 1, 2007 withdrawing a consecutive 30-day average of 100,000 gpd or more from a combination of sources.

(ii) Any new source added to projects with previously approved withdrawals by the Commission.

(iii) Any withdrawal increased above that amount which was previously approved by the Commission.

(iv) With respect to projects with grandfathered withdrawals:

(A) Registered in accordance with subpart E of this part that increases its withdrawal by any amount over the quantity determined under § 806.44;

(B) Increasing its withdrawal individually or in combination from all sources to an average of 100,000 gpd or more in any consecutive 30-day period; or

(C) That failed to register its withdrawals in accordance with subpart E of this part.

(v) Any project, regardless of when initiated, involving a withdrawal of a consecutive 30-day average of 100,000 gpd or more, from either groundwater or surface water sources, or in combination from both, and undergoing a change of ownership, unless such project satisfies the requirements of paragraph (b) of this section or the existing Commission approval for such project is transferred pursuant to § 806.6.

(3) *Diversions.* Except with respect to agricultural water use projects not subject to the requirements of paragraph (a)(1) of this section, the projects described in paragraphs (a)(3)(i) through (iv) of this section shall require an application to be submitted in accordance with § 806.13, and shall be subject to the standards set forth in § 806.24. The project sponsors of out-of-basin diversions shall also comply with all applicable requirements of this part relating to consumptive uses and withdrawals. The projects identified in paragraphs (a)(3)(v) and (vi) of this section shall be subject to regulation pursuant to § 806.22(f).

(i) Any project initiated on or after January 23, 1971, involving the diversion of water into the basin by any amount, or involving a diversion of water out of the basin of an average of 20,000 gallons of water per day or more in any consecutive 30-day period.

(ii) With respect to diversions previously approved by the Commission, any project that will increase a diversion above the amount previously approved.

(iii) With respect to diversions initiated prior to January 23, 1971, any project that will increase a diversion into the basin by any amount, or increase the diversion of water out of the basin by any amount.

(iv) Any project, regardless of when initiated, involving the diversion of water into the basin by any amount or involving a diversion of water out of the basin by an average of 20,000 gallons of water per day or more in any consecutive 30-day period, and undergoing a change of ownership, unless such project satisfies the requirements of paragraph (b) of this section or the Commission approval for such project is transferred pursuant to § 806.6.

(v) The interbasin diversion of any flowback or production fluids, tophole water and captured stormwater from hydrocarbon development projects from one drilling pad site to another drilling pad site for use in hydrofracture stimulation, provided it is handled, transported and stored in compliance with all standards and requirements of the applicable member jurisdiction, shall not be subject to separate review and approval as a diversion under this paragraph if the generating or receiving

pad site is subject to an Approval by Rule issued pursuant to § 806.22(f) and provided all monitoring and reporting requirements applicable to such approval are met.

(vi) The diversion of flowback or production fluids, tophole water and captured stormwater from a hydrocarbon development project for which an Approval by Rule has been issued pursuant to § 806.22(f), to an out-of-basin treatment or disposal facility authorized under separate governmental approval to accept flowback or production fluids, shall not be subject to separate review and approval as a diversion under this paragraph, provided all monitoring and reporting requirements applicable to the Approval by Rule are met and it is handled, transported and stored in compliance with all standards and requirements of the applicable member jurisdiction.

(vii) The diversion of any flowback or production fluids, tophole water and captured stormwater from hydrocarbon development projects located outside the basin to an in-basin treatment or disposal facility authorized under separate government approval to accept flowback or production fluids, shall not be subject to separate review and approval as a diversion under this paragraph (a)(3), provided the fluids are handled, transported and stored in compliance with all standards and requirements of the applicable member jurisdiction.

(viii) The diversion of drinking water and/or municipal wastewater out of the basin to a municipality on or straddling the basin divide if provided by or through a publicly or privately owned entity and regulated by the appropriate agency of the member jurisdiction shall not be subject to review and approval as a diversion under this paragraph (a)(3) of this section or as a consumptive use under paragraph (a)(1) of this section.

(ix) The diversion of drinking water and/or municipal wastewater into the basin to a municipality if provided by or through a publicly or privately owned entity and regulated by the appropriate agency of the member jurisdiction shall not be subject to review and approval as a diversion under paragraph (a)(3) of this section.

(4) *Crossing state boundaries.* Any project on or crossing the boundary between two member states.

(5) *Significant effect.* Any project in a member state having a significant effect on water resources in another member state.

(6) *Comprehensive plan.* Any project which has been or is required to be included by the Commission in its comprehensive plan, or will have a significant effect upon the comprehensive plan.

(7) *Determination.* Any other project so determined by the commissioners or Executive Director pursuant to § 806.5 or 18 CFR part 801. Such project sponsors shall be notified in writing by the Executive Director.

(8) *Natural gas.* Any unconventional natural gas development project in the basin involving a withdrawal, diversion or consumptive use, regardless of the quantity.

(9) *General permit.* Any project subject to coverage under a general permit issued under § 806.17.

(b) Any project that did not require Commission approval prior to January 1, 2007, and undergoing a change of ownership, shall be exempt from the requirements of paragraph (a)(1)(iv), (a)(2)(v) or (a)(3)(iv) of this section if it is a:

(1) Transfer of a project to the transferor's spouse or one or more lineal descendents, or any spouse of such lineal descendents, or to a corporation owned or controlled by the transferor, or the transferor's spouse or lineal descendents, or any spouse of such lineal descendents, for so long as the combined ownership interest of the transferor, the transferor's spouse and/or the transferor's lineal descendent(s) and their spouses, continues to be 51 percent or greater; or

(2) Transfer of land used primarily for the raising of food, fiber or forage crops, trees, flowers, shrubs, turf products, livestock, or poultry, or for aquaculture, to the extent that, and for so long as, the project's water use continues to be for such agricultural water use purposes.

■ 4. Amend § 806.6 by revising paragraphs (a)(5) and (b) and by adding paragraph (d) to read as follows:

§ 806.6 Transfer of approvals.

(a) * * *

(5) If the existing project has an unapproved withdrawal, consumptive use and/or diversion listed in paragraph (b) of this section, the transfer shall be conditioned to require the submission of a new application for review and approval of the unapproved withdrawal, consumptive use and/or diversion consistent with §§ 806.4 and 806.14 and paragraph (d) of this section.

* * * * *

(b) Previously unapproved activities associated with a project subject to transfer under paragraph (a) include:

(1) The project has an associated pre-compact consumptive water use that has not had mitigation approved by the Commission.

(2) The project has an associated diversion that was initiated prior to January 23, 1971.

(3) Projects registered under subpart E of this part.

* * * * *

(d) Any unapproved activities associated with a transferred project shall be subject to the following:

(1) The transfer approval shall be conditioned to include monitoring requirements under § 806.30 for all previously unapproved sources and activities.

(2) The transfer approval may include any other conditions consistent with this part deemed necessary by the Executive Director.

(3) The approved transfer will act as the unapproved activity's temporary approval for a period of five years, at which point, the project sponsor shall submit an application for review and approval consistent with subpart B of this part.

(4) The Executive Director may require hydrogeologic evaluation under § 806.12 and/or formal review and approval of any of the previously unapproved sources sooner if those sources show a substantial likelihood of environmental harm, interference with other water users or water availability issues.

■ 5. Revise § 806.12 to read as follows:

§ 806.12 Hydrogeologic evaluation.

Evaluation of groundwater withdrawal projects requires a hydrogeologic evaluation, which may be an aquifer test in accordance with an approved plan or an alternative hydrogeologic evaluation in conformance with this section.

(a) Prior to submission of an application pursuant to § 806.13, a project sponsor seeking approval for a new groundwater withdrawal, a renewal of an expiring groundwater withdrawal, or an increase of a groundwater withdrawal shall perform an aquifer test.

(b) Unless an alternative hydrogeologic evaluation method is approved, the project sponsor shall prepare an aquifer test plan for prior review and approval by Commission staff before testing is undertaken. Such plan shall include a groundwater availability analysis to determine the availability of water during a 1-in-10-year recurrence interval.

(c) Unless otherwise specified, approval of a test plan is valid for two years from the date of approval.

(d) Approval of a test plan shall not be construed to limit the authority of the Commission to require additional testing or monitoring.

(e) The project sponsor may be required, at its expense, to provide temporary water supply if an aquifer test results in interference with an existing water use.

(f) Review of submittals under this section may be terminated by the Commission in accordance with the procedures set forth in § 806.16.

(g) This section does not apply to withdrawals related to mine dewatering, water resources remediation or AMD facilities, provided the activity is governed by another regulatory agency.

(h) Sources undergoing renewal that can provide an interpretative hydrogeologic report that documents the results of a Commission approved aquifer test or documentation of an approved prior waiver by the Commission may meet the requirements of § 806.12 for that previously approved groundwater source.

(i) In lieu of completing a Commission-approved aquifer test, the project sponsor may submit an Alternative Hydrogeologic Evaluation (AHE) that provides supporting information equivalent to that which would be obtained from completing an approved aquifer test under paragraph (a) of this section. This supporting information includes, but is not limited to, prior aquifer testing data, the withdrawal setting and location, existing site specific operational data, and prior Commission approved waivers of aquifer testing requirements. Commission staff may approve an AHE for a project or require completion of a Commission approved aquifer test in accordance with paragraph (a) of this section.

(j) This section does not apply to withdrawals from a small capacity source, unless otherwise determined by the Executive Director.

■ 6. Amend § 806.14 by:

■ a. Revising paragraphs (a)(2) and (3), (b)(1) and (2), and (c)(2), (3) and (5);

■ b. Adding paragraphs (c)(10) and (11); and

■ c. Revising paragraph (d).

The revisions and additions read as follows:

§ 806.14 Contents of application.

(a) * * *

(2) Project location, including latitude and longitude coordinates in decimal degrees accurate to within 10 meters, the project location displayed on a map, and evidence of legal access to the property upon which the project is proposed.

(3) Project description, including: Purpose, proposed quantity to be withdrawn or consumed, if applicable, and description of all sources, consumptive uses and diversions related to the project.

* * * * *

(b) * * *

(1) *Surface Water.* (i) Water use and availability.

(ii) Project setting, including surface water characteristics, identification of wetlands, and site development considerations.

(iii) Description and design of intake structure.

(iv) Anticipated impact of the proposed project on local flood risk, recreational uses, fish and wildlife and natural environment features.

(v) For new projects and major modifications to increase a withdrawal, alternatives analysis for a withdrawal proposed in settings with a drainage area of 50 miles square or less, or in a water with exceptional water quality, or as required by the Commission.

(2) *Groundwater.* (i) With the exception other projects which are addressed in paragraph (b)(6) of this section, the project sponsor shall demonstrate that requirements of § 806.12 have been met by providing one of the following:

(A) An interpretive report that includes the results of a Commission approved aquifer test and an updated groundwater availability estimate if changed from the aquifer test plan,

(B) An approved AHE,

(C) A prior determination by the Commission staff under § 806.12(h) that the intent and requirements of § 806.12 have been met along with an updated groundwater availability estimate.

(ii) Water use and availability.

(iii) Project setting, including nearby surface water features.

(iv) Groundwater elevation monitoring plan for all production wells.

(v) Alternatives analysis as required by the Commission.

* * * * *

(c) * * *

(2) Project location, including latitude and longitude coordinates in decimal degrees accurate to within 10 meters, the project location displayed on map, and evidence of legal access to the property upon which the project is located.

(3) Project description, to include, but not be limited to: Purpose, proposed quantity to be withdrawn or consumed if applicable, description of all sources, consumptive uses and diversions related to the project and any proposed project modifications.

* * * * *

(5) An as-built and approved metering plan that conforms to § 806.30.

* * * * *

(10) Changes to the facility design.

(11) Any proposed changes to the previously authorized purpose.

(d) Additional information is required for the following applications for renewal of expiring approved projects.

(1) *Surface water.* (i) Description and as-built of intake structure.

(ii) For renewals seeking to increase a withdrawal, alternatives analysis for a withdrawal proposed in settings with a drainage area of 50 miles square or less, or in a waterway with exceptional water quality, or as required by the Commission.

(2) *Groundwater.* (i) The project sponsor shall demonstrate that requirements of § 806.12 have been met by providing one of the following:

(A) Provide an interpretive report that includes the results of a Commission approved aquifer test and an updated GW availability estimate if changed from the aquifer test plan;

(B) An approved AHE; or

(C) A prior determination by the Commission staff under § 806.12(h) that the intent and requirements of § 806.12 have been met.

(ii) An interpretative report providing analysis and comparison of current and historic water withdrawal and groundwater elevation data with previously completed materials to demonstrate satisfaction of § 806.12, which may include a hydrogeologic report from previous aquifer testing, an approved AHE or prior determination of waiver of aquifer testing.

(iii) Current groundwater availability analysis assessing the availability of water during a 1-in-10 year drought recurrence interval under the existing conditions within the recharge area and predicted for term of renewal (*i.e.,* other users, discharges, and land development within the groundwater recharge area).

(iv) Groundwater elevation monitoring plan for all production wells.

(v) Alternatives analysis as required by the Commission.

(3) *Consumptive use.* (i) Consumptive use calculations.

(ii) Mitigation plan, including method of consumptive use mitigation.

(4) *Into basin diversion.* (i) Provide the necessary information to demonstrate that the project will continue to meet the standards in § 806.24(c).

(ii) Identification of the source and current water quality characteristics of the water to be diverted.

(5) *Out of basin diversion.* (i) Provide the necessary information to demonstrate that the project will continue to meet the standards in § 806.24(b).

(6) *Other projects.* Other projects, including without limitation, mine dewatering, water resources remediation projects, and AMD facilities that qualify as a withdrawal.

(i) In lieu of a hydrogeologic evaluation, a copy of approved report(s) prepared for any other purpose or as required by other governmental regulatory agencies that provides a demonstration of the hydrogeologic and/or hydrologic effects and limits of said effects due to operation of the project and effects on local water availability.

(ii) Any data or reports that demonstrate effects of the project are consistent with those reports provided in paragraph (d)(6)(i) of this section.

(iii) Demonstration of continued need for expiring approved water source and quantity.

* * * * *

■ 7. Revise § 806.15 to read as follows:

§ 806.15 Notice of application.

(a) Except with respect to paragraphs (e), (f), and (g) of this section, any project sponsor submitting an application to the Commission shall provide notice thereof to the appropriate agency of the member State, each municipality in which the project is located, and the county and the appropriate county agencies in which the project is located. The project sponsor shall also publish notice of submission of the application at least once in a newspaper of general circulation serving the area in which the project is located. The project sponsor shall also meet any of the notice requirements set forth in paragraphs (b) through (d) of this section, if applicable. All notices required under this section shall be provided or published no later than 20 days after submission of the application to the Commission and shall be in a form and manner as prescribed by the Commission.

(b) For withdrawal applications submitted pursuant to § 806.4(a)(2) for new projects, major modifications, and renewals requesting an increase, the project sponsor shall also provide the notice required under paragraph (a) of this section to each property owner listed on the tax assessment rolls of the county in which such property is located and identified as follows:

(1) For groundwater withdrawal applications, the owner of any contiguous property that is located within a one-quarter mile radius of the proposed withdrawal location.

(2) For surface water withdrawal applications, the owner of any property that is riparian or littoral to the body of water from which the proposed withdrawal will be taken and is within a one-half mile radius of the proposed withdrawal location.

(3) For groundwater withdrawal applications, the Commission or Executive Director may allow notification of property owners through alternate methods where the property of such property owner is served by a public water supply.

(c) For projects involving a diversion of water out of the basin, the project sponsor shall also publish a notice of the submission of its application at least once in a newspaper of general circulation serving the area outside the basin where the project proposing to use the diverted water is located. For projects involving a diversion of water into the basin, the project sponsor shall also publish a notice of the submission of its application at least once in a newspaper of general circulation serving the area outside the basin where the withdrawal of water proposed for diversion is located.

(d) The project sponsor shall provide the Commission with a copy of the United States Postal Service return receipt or the verified return receipt from a comparable delivery service for the notifications to agencies of member States, municipalities, counties and appropriate county agencies required under this section. The project sponsor shall also provide certification on a form provided by the Commission that it has published the newspaper notice(s) required by this section and made the landowner notifications as required under paragraph (b) of this section, if applicable. The project sponsor shall maintain all proofs of publication and records of notices sent under this section for the duration of the approval related to such notices.

(e) For Notices of Intent (NOI) seeking coverage under a general permit, the project sponsor shall provide notice of the NOI to the appropriate agency of the member State and each municipality and county and appropriate county agencies in which the project is located and any additional notice identified in the general permit.

(f) For applications for minor modifications and approvals by rule under § 806.22(e), the project sponsor shall provide notice of the application to the appropriate agency of the member State and each municipality and county and appropriate county agencies in the which the project is located.

(g) For NOIs seeking an approval pursuant to § 806.22(f), the project sponsor shall provide notice of the application to the appropriate agency of the member State, each municipality, county and appropriate county agencies, and the owner of the property on or in which the drilling pad site is located. For requests for approval submitted under § 806.22(f)(13), the project sponsor shall provide notice of the application to the appropriate agency of the member State, each municipality, county and appropriate county agencies in which the public water supply is located.

■ 8. Amend § 806.18 by revising paragraph (c) to read as follows:

§ 806.18 Approval modifications.

* * * * *

(c) *Minor modifications.* The following are minor modifications:

(1) Correction of typographical or other errors;

(2) Changes to monitoring or metering conditions;

(3) Addition, amendment or removal of sources of water for consumptive use or project descriptions;

(4) Changes to the authorized water uses;

(5) Changes to conditions setting a schedule for developing, implementing, and/or reporting on monitoring, data collection and analyses;

(6) Changes to the design and minor changes to the location of intakes;

(7) Increases to total system limits that were established based on the projected demand of the project; and

(8) Modifications of extraction well network used for groundwater remediation systems.

(9) Adjustments to a term of an approval to align the approval with a member jurisdiction approval or another docket approval by the Commission.

(10) Changes to the method of consumptive use mitigation to payment of the mitigation fee, providing for discontinuance, use of storage or an adequate conservation release in accordance with a previous Commission determination.

(11) Addition of stormwater as a source of consumptive use, including an increase to the total consumptive use related to the stormwater use.

(12) Extension of the date of commencement of a withdrawal, diversion or consumptive use established under § 806.31(b).

* * * * *

■ 9. Amend § 806.22 by revising paragraphs (e)(6) and (8), and (f)(4) and (11) through (14) to read as follows:

§ 806.22 Standards for consumptive use of water.

* * * * *

(e) * * *

(6) *Mitigation.* The project sponsor shall comply with mitigation in

accordance with paragraph (b)(1)(iii), (b)(2) or (3) of this section.

* * * * *

(8) *Decision.* The Executive Director may grant, deny, suspend, revoke, modify or condition an approval to operate under this approval by rule, or renew an existing approval by rule previously granted hereunder, and will notify the project sponsor of such determination, including the quantity of consumptive use approved. Use of small capacity sources or sources used only for supply of potable water may be appropriately included as a part of this approval by rule in the discretion of the Executive Director.

* * * * *

(f) * * *

(4) The project sponsor shall comply with metering, daily use monitoring and quarterly reporting as specified in § 806.30, or as otherwise required by the approval by rule. The project sponsor shall submit a post-hydrofracture report in a form and manner as prescribed by the Commission.

* * * * *

(11) In addition to water sources approved for use by the project sponsor pursuant to § 806.4 or this section, for unconventional natural gas development or hydrocarbon development, whichever is applicable, a project sponsor issued an approval by rule pursuant to paragraph (f)(9) of this section may utilize any of the following water sources at the drilling pad site, subject to such monitoring and reporting requirements as the Commission may prescribe:

(i) Tophole water encountered during the drilling process, provided it is used only for drilling or hydrofracture stimulation.

(ii) Captured stormwater, provided it is used only for drilling or hydrofracture stimulation.

(iii) Drilling fluids, formation fluids, flowback or production fluids obtained from a drilling pad site, production well site or hydrocarbon water storage facility, provided it is used only for hydrofracture stimulation, and is handled, transported and stored in compliance with all standards and requirements of the applicable member jurisdiction.

(12) A project sponsor issued an approval by rule pursuant to paragraph (f)(9) of this section may utilize a source of water, except a public water supply, approved by the Commission pursuant to § 806.4(a) and issued to persons other than the project sponsor, provided any such source is approved for use in unconventional natural gas development, or hydrocarbon development, whichever is applicable, the project sponsor has an agreement for its use and the project sponsor registers such source with the Commission on a form and in the manner prescribed by the Commission. Use of the registered source shall not commence until the Commission acknowledges in writing that the registration is proper and complete.

(13) A project sponsor issued an approval by rule pursuant to paragraph (f)(9) of this section may also utilize other sources of water, including but not limited to, water withdrawals or wastewater discharge not otherwise associated with an approval issued by the Commission pursuant to § 806.4(a), public water supplies, or another approval by rule issued pursuant to paragraph (f)(9) of this section, provided such sources are first approved by the Executive Director. Any request for approval shall be submitted on a form and in the manner prescribed by the Commission, shall satisfy the notice requirements set forth in § 806.15, and shall be subject to review pursuant to the standards set forth in subpart C of this part.

(14) [Reserved]

* * * * *

■ 10. Amend § 806.23 by revising paragraphs (b) introductory text and (b)(4), and adding paragraphs (b)(6) and (7), to read as follows:

§ 806.23 Standards for water withdrawals.

* * * * *

(b) Limitations on and considerations for withdrawals.

* * * * *

(4) The Commission may require the project sponsor to undertake the following, to ensure its ability to meet its present or reasonably foreseeable water needs from available groundwater or surface water without limitation:

(i) Investigate additional sources, interconnections or storage options to meet the demand of the project.

(ii) Submit a water resource development plan that shall include, without limitation, sufficient data to address any supply deficiencies, identify alternative water supply options, including interconnections, and support existing and proposed future withdrawals.

* * * * *

(6) Notwithstanding this paragraph, existing withdrawals that successfully complete the process in § 806.12(h) and (i) shall satisfy the standards in paragraph (b)(2) of this section. Further, evaluation of the withdrawal shall include reasonably foreseeable need and the need for total system limits, compliance with § 806.21, and any changes to the project or project location and setting.

(i) Approval of withdrawal limits on existing sources will not be set above the amount supported by the existing historical and current operating data or otherwise supported by the evaluation under § 806.12, and may be set at a different rate if supported by the evaluation required in this paragraph.

(ii) Any approvals shall include metering and measurement of parameters consistent with § 806.30, and may include conditions requiring monitoring of surface water features or other withdrawal sources.

(iii) If any reported metering or monitoring data or other information show a significant adverse impact to any consideration in paragraph (b)(2) of this section, the Commission may take actions necessary to eliminate the significant adverse impact, including but not limited to requiring the project to undertake more data collection and analysis, aquifer testing and/or conditioning the docket approval.

(7) Notwithstanding this paragraph, small capacity sources shall be subject to any withdrawal limit, including total system limit, set by the Commission and shall include metering and measurement of parameters consistent with § 806.30.

■ 11. Amend § 806.34 by revising paragraph (c)(2) to read as follows:

§ 806.34 Emergencies.

* * * * *

(c) * * *

(2) With the concurrence of the chairperson of the Commission and the commissioner from the affected member state, issue an emergency certificate for a term not to extend beyond the next regular business meeting of the Commission where the extension of the certificate may be included in the notice for the next regularly scheduled public hearing for that business meeting.

* * * * *

Dated: March 15, 2021.

Jason E. Oyler,

Secretary to the Commission.

[FR Doc. 2021–05612 Filed 3–25–21; 8:45 am]

BILLING CODE 7040–01–P

DEPARTMENT OF STATE

22 CFR Part 22

[Public Notice: 11379]

RIN 1400–AE15

Schedule of Fees for Consular Services—Passport Security Surcharge

AGENCY: Department of State.

ACTION: Proposed rule.

SUMMARY: The Department of State proposes an adjustment to the Schedule of Fees for Consular Services (Schedule of Fees) of the Bureau of Consular Affairs (CA) based on the findings of the most recently approved update to the Cost of Service Model (CoSM). The CoSM is updated annually using a combination of costs, predicted workload, and level of effort data. The proposed adjustment will result in a more accurate alignment of the fees for consular services to the costs of providing those services. The notice proposes an increased amount for the passport security surcharge, from $60 to $80, which the Department will retain.

DATES: The Department of State will accept comments until May 25, 2021.

ADDRESSES: Interested parties may submit comments to the Department by any of the following methods:

- *Visit the Regulations.gov website at: http://www.regulations.gov* and search for the Regulatory Information Number (RIN) 1400–AE15 or docket number DOS–2021–0006.
- *Email: fees@state.gov.* You must include the RIN (1400–AE15) in the subject line of your message.
- All comments should include the commenter's name, the organization the commenter represents (if applicable), and the commenter's address. If the Department is unable to read your comment for any reason, and cannot contact you for clarification, the Department may not be able to consider your comment. After the conclusion of the comment period, the Department will publish a final rule that will address relevant comments as expeditiously as possible.

During the comment period, the public may request an appointment to review Cost of Service Model (CoSM) data on site if certain conditions are met. To request an appointment, please call 202–485–8915 and leave a message with your contact information.

FOR FURTHER INFORMATION CONTACT: Rob Schlicht, Management Analyst, Office of the Comptroller, Bureau of Consular Affairs, Department of State; phone: 202–485–8915, email: *fees@state.gov.*

SUPPLEMENTARY INFORMATION:

Background

The proposed rule makes changes to the Schedule of Fees in 22 CFR 22.1 by increasing the passport security surcharge fee from $60 to $80. The Department generally sets and collects fees for consular services based on the concept of full cost recovery to the U.S. government. The Department uses an Activity-Based Costing (ABC) methodology to calculate annually the cost of providing consular services. The fees are based on these cost estimates and the Department aims to update the Schedule of Fees biennially, unless a significant change in costs warrants an immediate recommendation to change the fees. The Department proposes this fee change based on the results of the most recently approved update to the CoSM, which reflect increases in security-related costs for processing passports attributed to the Passport Security Surcharge. Increases in security-related costs are largely due to increased compensation costs for passport adjudicators and enhanced printing technology costs for the Next Generation (NextGen) passport book. The Department therefore proposes an increase to this surcharge to fully recover these costs.

What is the authority for this action?

The Department of State derives the general authority to set and charge fees for consular services it provides from the general user charges statute, 31 U.S.C. 9701. *See, e.g.,* 31 U.S.C. 9701(b)(2)(A) (''The head of each agency . . . may prescribe regulations establishing the charge for a service or thing of value provided by the agency . . . based on . . . the costs to the government.''). As implemented through Executive Order 10718 of June 27, 1957, 22 U.S.C. 4219 further authorizes the Department to establish fees to be charged for official services provided by U.S. embassies and consulates.

Several statutes address specific fees relating to passports. For instance, 22 U.S.C. 214 authorizes the Secretary of State to set the passport application fee by regulation. In addition, another statute authorizes the Department to collect and retain a surcharge on passports to help pay for efforts to support enhanced border security. *See* 8 U.S.C. 1714. Although the passport security surcharge was originally frozen statutorily at $12, subsequent legislation authorized the Department to amend this surcharge administratively, provided, among other things, that the resulting surcharge is ''reasonably related to the costs of providing services in connection with the activity or item for which the surcharges are charged.'' Public Law 109–472, section 6, 120 Stat. 3555, reproduced at 8 U.S.C. 1714 (note).

Certain people are exempted by law or regulation from paying specific fees. These are noted in the Schedule of Fees. For example, officers or employees of the U.S. Government proceeding abroad in the discharge of official duties are exempt from passport fees, including the passport security surcharge. *See* 22 U.S.C. 214(a); 22 CFR 22.1; 22 CFR 51.52(b).

Although the funds collected for some consular fees must be deposited into the general fund of the Treasury pursuant to 31 U.S.C. 3302(b), various statutes permit the Department to retain most of the fee revenue it collects. The Department retains the passport security surcharge collections (*see* 8 U.S.C. 1714).

The Department last changed fees for passport and citizenship services, including the passport security surcharge, in an interim final rule dated September 8, 2015. *See* Department of State Schedule of Fees for Consular Services, Department of State and Overseas Embassies and Consulates, 22 CFR part 22 (80 FR 53704). Those changes to the Schedule went into effect September 26, 2015 per a correction to the effective date published as 80 FR 55242. A final rule regarding those fees was published on January 31, 2018 (83 FR 4423).

Why is the Department adjusting fees at this time?

The Department generally sets consular fees at an amount calculated to achieve full recovery of the costs to the U.S. Government of providing the consular service in a manner consistent with general user charges principles, regardless of the specific statutory authority under which the fees are authorized. As set forth in Office of Management and Budget (OMB) Circular A–25, as a general policy, each recipient should pay a reasonable user charge for government services, resources, or goods from which he or she derives a special benefit, at an amount sufficient for the U.S. Government to recover the full costs of providing the service, resource, or good. *See* OMB Circular No. A–25, sec. 6(a)(2)(a). The OMB guidance covers all Federal Executive Branch activities that convey special benefits to recipients beyond those that accrue to the general public. *See* OMB Circular No. A–25, sections 4(a), 6(a)(1).

The Department reviews consular fees periodically, including through the

annual update to its Cost of Service Model, to determine each fee's appropriateness in light of the OMB guidance. The Department proposes to make the changes set forth below in the Schedule of Fees accordingly. The CoSM is an activity-based costing model that determines the current direct and indirect cost to the U.S. Government associated with each consular good and service the Department provides. The current model update relied on FY 2019 actual costs, as well as predicted workload and level of effort data for FYs 2020–2022, to provide unit cost estimates. The update's results formed the basis of the changes proposed to the Schedule. Fees have been rounded up to the nearest $5 to make them easier to collect.

Activity-Based Costing

To set fees in accordance with the general user charges principles set forth in 31 U.S.C. 9701, the Department must determine the true cost to the U.S. Government of providing each consular service. Following guidance provided in ''Managerial Cost Accounting Concepts and Standards for the Federal Government,'' OMB's Statement #4 of Federal Accounting Standards (SFFAS #4), available at *http://www.fasab.gov/pdffiles/sffas-4.pdf,* the Department chose to develop and use an Activity-Based Costing (''ABC'') model to determine the true cost of each consular service.

The Government Accountability Office (GAO) defines ABC as a ''set of accounting methods used to identify and describe costs and required resources for activities within processes.'' Organizations can use the same staff and resources (computer equipment, production facilities, etc.) to produce multiple products or services; therefore, ABC models seek to identify and assign costs to processes and activities and then to individual products and services through the identification of key cost drivers referred to as ''resource drivers'' and ''activity drivers.'' The goal is to proportionally and accurately distribute costs. ABC models require financial and accounting analysis and modeling skills combined with a detailed understanding of an organization's business processes. SFFAS Statement #4 provides a detailed discussion of the use of cost accounting by the U.S. Government.

The ABC approach focuses on the activities required to produce a particular service or product and uses resource drivers to assign costs through activities to services. Resource drivers assign the organization's costs (resources including materials, supplies and labor utilized in the production or delivery of services and products) to activities using business rules that reflect the operational reality of CA and the data available from consular systems, surveys, and internal records. Most resource drivers are based on time spent on each activity. Activity drivers differentiate levels of effort associated with activities (the work performed by the organization such as adjudication, printing of books and performing data intake, etc.) that are applied to each cost object and are often volume-driven.

Example: Imagine a Government agency that has a single facility it uses to prepare and issue a single product—a driver's license. In this simple scenario, every cost associated with that facility (the salaries of employees, the electricity to power the computer terminals, the cost of a blank driver's license, etc.) can be attributed directly to the cost of producing that single item. If that agency wants to ensure that it is charging a ''self-sustaining'' price for driver's licenses, it only has to divide its total costs for a given time period by an estimate of the number of driver's licenses to be produced during that same time period. However, if that agency issues multiple products (driver's licenses, non-driver ID cards, etc.), has employees that work on other activities besides licenses (for example, accepting payment for traffic tickets), and operates out of multiple facilities it shares with other agencies, it becomes much more complex for the agency to determine exactly how much it costs to produce any single product. In those instances, the agency would need to know what percent of time its employees spend on each service and how much of its overhead (rent, utilities, facilities maintenance, etc.) can be allocated to the delivery of each service to determine the cost of producing each of its various products—the driver's license, the non-driver ID card, etc. Using an ABC model allows the agency to develop those cost estimates.

The Cost of Service Model

The Department has been conducting periodic cost of service studies using ABC methods to determine the costs of its consular services since 2009. In 2010, the Department moved to adopt an annually updated CoSM that measures all of its consular operations and costs, including all of the activities needed to provide consular services. The CoSM now includes approximately 112 distinct activities and enables the Department to model its consular-related costs with a higher degree of precision.

The Department uses three methods outlined in SFFAS Statement #4 (paragraph 149(2)) to assign resource costs to activities: (a) Direct tracing; (b) estimation based on surveys, interviews, or statistical sampling; and (c) allocations. The Department uses direct tracing to assign the cost of, for example, a physical passport book. Assigning costs to activities such as adjudicating a passport application requires estimation based on surveys, interviews, or statistical sampling to determine who performs an activity and how long it takes. Indirect costs (overhead) are allocated according to the level of effort needed for a particular activity. Level of effort captures the time spent on an activity in minutes, hours, or number of full-time equivalent (FTE) employees, as measured in our overseas time surveys and domestic task reports. Where possible, the model uses overhead cost pools to assign indirect costs only to related activities. For instance, the cost of rent for domestic passport agencies is assigned only to passport costs, not to visas or other services the Department provides overseas.

To assign labor costs, the Department relies on a variety of industry-standard estimation methodologies. To document how consular staff divide their time overseas, the Department conducts surveys at a representative sample of consular sections overseas each year. The Department uses survey data in conjunction with volume data from over 200 individual consular sections in consulates and embassies worldwide to develop resource drivers to assign labor costs to activities. For consular activities that take place in the United States, the Department collects volume and level of effort data from various periodic workload reports such as the Passport Management Information System (MIS) and the Agency Task Report (ATR). Cost information is gathered from reports in the Department's Global Financial Management System managed by the Bureau of the Comptroller and Global Financial Services (CGFS). The Department converts the cost and workload data into resource drivers and activity drivers for each resource and activity.

The Cost of Service Model uses actual costs, coupled with projected workloads, which are based on demand projections produced by the Bureau of Consular Affairs (CA). Actual cost and volume data is used in the model to inform projected costs and volumes. The model also uses three years of projected volume data to calculate unit costs.

The Department includes every line item of costs in the CoSM, including items such as physical material for making passports, salaries, rent, supplies, and IT hardware and software. The Department then determines a resource driver for each of these costs and enters the resource drivers and assignments into the model. The Department then selects an activity driver, such as the volume data discussed above, for each activity, in order to assign these costs to each service type. This process allows the model to calculate a total cost for each of the line items in the Schedule of Fees. The model then divides this total cost by the predicted volume of the service or product in question in order to determine a final unit cost for the service or product. The Department continues to refine and improve the CoSM annually in order to achieve full cost recovery for the U.S. Government.

Because the CoSM is a complex series of iterative processes incorporating more than a million calculations, it is not reducible to a tangible form such as a document. Inputs are formatted in spreadsheets for entry into the ABC software package, which is an industry standard commercial off-the-shelf product licensed through SAP Business Objects. The software's output includes spreadsheets with raw unit costs, validation reports, and management reports.

Proposed Passport Fee Changes

Passport Security Surcharge

The Department proposes an increase to the passport security surcharge, which is applicable to all applicants except those persons who are statutorily exempted from paying passport fees, from $60 to $80. The passport security surcharge (PSS) includes costs associated with passport application processing that support enhanced border security (see 8 U.S.C. 1714 and Pub. L. 109–472, section 6, 120 Stat. 3555, reproduced at 8 U.S.C. 1714 note) such as the secure book and card materials, passport printers, and compensation associated with passport adjudication, including fraud prevention. The current $60 fee is based on the results of the 2013 CoSM and was implemented in 2015. The results of the most recently approved update to the Cost of Service Model indicated that these costs have increased and now amount to approximately $80 per passport. This proposed fee is consistent with model results that reflect a steady increase in security-related costs since the fee was last updated in 2015. This proposed fee increase is a result of two main factors: (1) Model methodology updates; and (2) increases in security-related costs.

The updates to the model's methodology improved accuracy in assigning costs to activities by more precisely tracing costs to specific consular activities, including isolating and assigning costs of enhanced border security to the passport security surcharge. One update to the model's methodology since the last time the PSS was adjusted is an overhaul of the activity dictionary, which is the collection of defined processes and tasks that must be completed to produce a particular product, including a passport. All resources are assigned to activities based on the level of effort required for that activity. The activity dictionary changes focused on standardizing and clarifying tasks, ultimately improving accuracy in cost assignments. These changes resulted in more security-related costs being attributed to the PSS since this methodology update determined more precisely which passport activities are security-related and assigned them accordingly. Since this update, the model has produced consistent results for the PSS, leading to only modest increases in security-related costs in each annual update.

A second update to the model has been the implementation of the Consular Overseas Data Collection (CODaC) survey. CoSM uses CODaC data to produce accurate model inputs by collecting and developing cycle times (the exact amount of time it takes to perform an activity) for key activities performed overseas. CODaC also collects percentages of time spent on activities, which, when combined with cycle times and additional data, informs the total time (or level of effort) required to complete a particular activity. The survey is carried out three times per year, surveying an average of 70 posts per year. Every survey cycle solicits data from a blend of small, medium, large and extra-large posts, and every post is surveyed at least once every four years. This approach produces reliable model outputs for cost management and fee-setting. Since CODaC is focused on overseas data collection, it includes activities relevant to overseas passport processing, which informs and improves the overall quality of passport cost data. The current $60 PSS fee, which is based on the 2013 model, did not include CODaC data. The overseas passport level of effort results have been consistent since implementing the more accurate CODaC survey. These methodology updates, included since the 2014 model, allow for the model to more precisely capture and assign the security-related costs of passport application processing, which have indicated increased PSS costs.

The Department has also experienced a steady increase each year in costs incurred in support of enhanced border security since the last adjustment to PSS. Increases in security-related costs are largely due to increased compensation costs for passport adjudicators and enhanced printing technology costs for the Next Generation (NextGen) passport book. Compensation costs, which include all salary and overhead costs for direct-hire full-time employees (FTEs), represent the largest change, a 37 percent increase, in the Passport Directorate since the 2013 model update. More FTEs have been assigned to adjudication domestically in line with more rigorous security vetting standards, and the CODaC survey indicates that more time is required to adjudicate overseas passports than the data included in the 2013 model indicated. Additionally, a new passport agency in San Juan, Puerto Rico, was opened in 2014 to serve the needs of more than 3 million U.S. citizens, and the Department hired eight full-time passport adjudicators and one supervisory adjudicator for this purpose. This new passport agency offers local expedited and emergency passport services. Prior to the establishment of the San Juan agency, U.S. citizens who needed a passport within 14 days were obligated to travel to the Miami passport office to receive these services.

Passport adjudication may only be carried out by certified employees. Per the Code of Federal Regulations, passport adjudication is a specialized, security-centric function that may only be carried out by certified, full-time employee passport adjudicators. Becoming certified in passport adjudication takes more than a year of specialized training. Passport adjudication is also the central function to the processing of passports, and passport adjudication processes and systems are highly specialized and secure. Passport adjudicator staffing capacity is aligned to projected demand and human resources pipelines are planned far in advance in concert with demand forecasts. Historically, the number of U.S. citizens with a valid passport continues to grow from 39 percent in 2015 to 44.5 percent in 2019. The Passport Directorate has a service level commitment to deliver completed passports within a specified timeframe, and must plan staffing accordingly. Pre-COVID–19, passport demand was expected to continue to grow from

2020–2030. As discussed below, in 2020, COVID–19 impacted passport demand, but that demand is expected to start recovering from the impacts of COVID–19 in FY 2022.

In this model update, non-compensation costs, which includes operating costs like domestic awards, contractor support costs, personnel travel and transportation, utilities, supplies, equipment, and CA technology costs that increase as FTE numbers increase were 17 percent higher than the 2013 model. The bulk of this increase was in Passport material book costs, which increased $7 per unit. Improved printing technology (known as ''NextGen''), which provides state-of-the-art anti-counterfeiting improvements, added an additional $3.45 per unit. The NextGen printer system replaces end-of-life equipment that uses outdated technology, and improves passport security features in line with current international standards for identity documents while enhancing border security. NextGen printing includes material features such as an advanced embedded chip that is protected by a new polycarbonate coating, as well as other confidential physical attributes that enhance border security by preventing both falsification and duplication.

Lastly, the projected volumes used in this model update for passport products have fallen compared to prior year volumes as a result of COVID–19's impact on passport demand, which does have a minimal impact on the unit cost. Unit costs are calculated as cost divided by volume, so if volume drops dramatically, the unit cost will increase. For example, in April of 2020, passport demand dropped 86 percent compared to April 2019. By August 2020, demand was 50 percent lower than August 2019, and by November 2020, demand was 33 percent lower than November 2019. The Department anticipates that demand during the first half of 2021 will remain similar to the demand of late 2020, and will begin to recover by FY 2022. The volume projections used in the most recent model include volumes during the expected post-COVID–19 recovery period of FY 2022, and this additional year helps stabilize volume volatility experienced in FY 2020 and anticipated to continue in FY 2021. However, projected volumes for this three-year period are still lower than the peak volumes the Department experienced prior to 2020. The Department recognizes that there may be some minimal elasticity in demand for passports, but expects that any impact on demand from this proposed increase would be *de minimis.* The regulatory findings under the Executive Order 12866 section further discuss anticipated passport demand and associated increases in revenue.

For the reasons stated above, the Department recommends increasing the passport security surcharge from $60 to $80, which will in turn impact the overall amount of the passport book application fee paid by all applicants. As a result of this recommendation, the overall passport book application fee for a first-time, adult applicant (using a DS–11), as well for adults seeking renewals (DS–82), will increase from $110 to $130. The passport security surcharge increase will also result in an increase to the overall passport book application fee for minors (DS–11) from $80 to $100.

Regulatory Findings

Administrative Procedure Act

The Department is publishing this rule as a proposed rule, with a 60-day provision for public comments.

Regulatory Flexibility Act

The Department has reviewed this rule and, by approving it, certifies that it will not have a significant economic impact on a substantial number of small entities as defined in 5 U.S.C. 601(6).

Unfunded Mandates Act of 1995

This rule will not result in the expenditure by state, local, and tribal governments, in the aggregate, or by the private sector, of $100 million or more in any year, and it will not significantly or uniquely affect small governments. Therefore, no actions were deemed necessary under the provisions of the Unfunded Mandates Reform Act of 1995, 2 U.S.C. 1501–1504.

Congressional Review Act

This rule is a major rule as defined by 5 U.S.C. 804(2).

Executive Order 12866

The Department has reviewed this rule to ensure its consistency with the regulatory philosophy and principles set forth in the Executive orders. OMB has determined that this rule is economically significant under Executive Order 12866.

This proposed rule is necessary in light of the Department of State's Cost of Service Model's findings that the cost of providing certain consular services has changed significantly and justifies the adjustment of the passport security surcharge through the rulemaking process. The Department is setting the fees in accordance with 31 U.S.C. 9701 and other applicable authority, as described in more detail above. *See, e.g.,* 31 U.S.C. 9701(b)(2)(A) (''The head of each agency . . . may prescribe regulations establishing the charge for a service or thing of value provided by the agency . . . based on . . . the costs to the Government.''). This regulation generally sets the fee for consular services at the amount required to recover the costs associated with providing these services.

The following table summarizes the impact of this proposed rule:

Item No.	Proposed fee	Current fee	Change in fee	Percentage increase	Estimated annual number of services requested [1]	Estimated change in annual fees collected [2]
SCHEDULE OF FEES FOR CONSULAR SERVICES						
* *	*	*	*	*	*	*
PASSPORT AND CITIZENSHIP SERVICES						
2. Passport Book Application Services for:						
(g) Passport book security surcharge (enhanced border security fee)	$80	$60	$20	33.33	FY20: 12,300,000 FY21: 12,300,000 FY22: 15,900,000	FY20: $246,000,000 FY21: $246,000,000 FY22: $318,000,000

Item No.	Proposed fee	Current fee	Change in fee	Percentage increase	Estimated annual number of services requested [1]	Estimated change in annual fees collected [2]
Total [3]	80	60	20	33.33	15,900,000	$318,000,000
* *	*	*	*	*	*	*

[1] Projected passport workload included in this CoSM update, FY 2020, 2021 and 2022 receipts projected by the PPT directorate as of July 2020.
[2] The Department of State retains this fee.
[3] The Department anticipates implementing this fee change in FY 2022. FY 2022 volumes are used to project fee collection totals.

Executive Orders 12372 and 13132

This regulation will not have substantial direct effects on the states, on the relationship between the National Government and the states, or on the distribution of power and responsibilities among the various levels of government. Therefore, in accordance with section 6 of Executive Order 13132, it is determined that this rule does not have sufficient federalism implications to require consultations or warrant the preparation of a federalism summary impact statement. The regulations implementing Executive Order 12372 regarding intergovernmental consultation on Federal programs and activities do not apply to this regulation.

Executive Order 13771

This rule is not subject to the requirements of Executive Order 13771 (82 FR 9339, February 3, 2017) because it is a transfer rule.

Executive Order 13175

The Department has determined that this rulemaking will not have tribal implications, will not impose substantial direct compliance costs on Indian tribal governments, and will not preempt tribal law. Accordingly, the requirements of Executive Order 13175 do not apply to this rulemaking.

Paperwork Reduction Act

This rule does not impose any new reporting or recordkeeping requirements subject to the Paperwork Reduction Act.

List of Subjects in 22 CFR Part 22

Consular services, Fees.

Accordingly, for the reasons stated in the preamble, 22 CFR part 22 is proposed to be amended as follows:

PART 22—SCHEDULE OF FEES FOR CONSULAR SERVICES—DEPARTMENT OF STATE AND FOREIGN SERVICE

■ 1. The authority citation for part 22 continues to read as follows:

Authority: 8 U.S.C. 1101 note, 1153 note, 1157 note, 1183a note, 1184(c)(12), 1201(c), 1351, 1351 note, 1714, 1714 note; 10 U.S.C. 2602(c); 22 U.S.C. 214, 214 note, 1475e, 2504(h), 2651a, 4206, 4215, 4219, 6551; 31 U.S.C. 9701; E.O. 10718, 22 FR 4632 (1957), 3 CFR, 1954–1958 Comp., p. 382; E.O. 11295, 31 FR 10603 (1966), 3 CFR, 1966–1970 Comp., p. 570.

■ 2. In § 22.1, amend the table by revising entry 2(g) under the heading ''Passport and Citizenship Services'' to read as follows:

§ 22.1 Schedule of fees.

* * * * *

SCHEDULE OF FEES FOR CONSULAR SERVICES

Item No.	Fee
Passport and Citizenship Services	
* * * * * * *	
2. * * *	
* * * * * * *	
(g) Passport book security surcharge (enhanced border security fee)	$80
* * * * * * *	

Ian Brownlee,

Acting Assistant Secretary for Consular Affairs, U.S. Department of State.

[FR Doc. 2021–06263 Filed 3–25–21; 8:45 am]

BILLING CODE 4710–06–P

DEPARTMENT OF HOMELAND SECURITY

Coast Guard

33 CFR Part 117

[Docket No. USCG–2020–0647]

RIN 1625–AA09

Drawbridge Operation Regulation; New Jersey Intracoastal Waterway, Point Pleasant, NJ

AGENCY: Coast Guard, Department of Homeland Security (DHS).

ACTION: Notice of proposed rulemaking.

SUMMARY: The Coast Guard proposes to modify the operating schedule that governs the Route 88 (Veterans Memorial) Bridge and Route 13 (Lovelandtown) Bridge across the New Jersey Intracoastal Waterway (NJICW) at Point Pleasant Canal, mile 3.0 and 3.9, respectively at Point Pleasant, NJ. This proposed modification will allow the drawbridges to be maintained in the closed position overnight.

DATES: Comments and related material must reach the Coast Guard on or before April 26, 2021.

ADDRESSES: You may submit comments identified by docket number USCG–2020–0647 using Federal e-Rulemaking Portal at *https://www.regulations.gov.* See the ''Public Participation and Request for Comments'' portion of the **SUPPLEMENTARY INFORMATION** section below for instructions on submitting comments.

FOR FURTHER INFORMATION CONTACT: If you have questions on this proposed rule, call or email Mr. Mickey Sanders, Bridge Administration Branch, Fifth District, U.S. Coast Guard, telephone (757) 398–6587, email *Mickey.D.Sanders2@uscg.mil.*

SUPPLEMENTARY INFORMATION:

I. Table of Abbreviations

CFR Code of Federal Regulations
DHS Department of Homeland Security
FR Federal Register
OMB Office of Management and Budget
NPRM Notice of Proposed Rulemaking (Advance, Supplemental)
§ Section
U.S.C. United States Code
NJICW New Jersey Intracoastal Waterway

II. Background, Purpose and Legal Basis

The New Jersey Department of Transportation, which owns and operates the Route 88 (Veterans Memorial) Bridge and Route 13 (Lovelandtown) Bridge, across the NJICW at Point Pleasant Canal, mile 3.0 and 3.9, respectively, at Point Pleasant, NJ, has requested this modification to reduce the number of bridge openings during off-peak hours.

The Route 88 (Veterans Memorial) Bridge across the NJICW at Point Pleasant Canal, mile 3.0, at Point Pleasant, NJ, has a vertical clearance of 10 feet above mean high water in the closed-to-navigation position. The bridge currently operates under 33 CFR 117.5.

The Route 13 (Lovelandtown) Bridge across the NJICW at Point Pleasant Canal, mile 3.9, at Point Pleasant, NJ, has a vertical clearance of 30 feet above mean high water in the closed-to-navigation position. The bridge currently operates under 33 CFR 117.5.

The Point Pleasant Canal is used predominately by recreational vessels and pleasure craft. The three-year average number of bridge openings, maximum number of bridge openings, and bridge openings between 11 p.m. to 7 a.m., by month and overall for August 2017, through August 2020, as drawn from the data contained in the bridge tender logs, is presented below. There is a monthly average of two bridge openings for each bridge, from 11 p.m. to 7 a.m., from August 2017 to August 2020.

Month	Average openings	Maximum openings	Proposed openings 11 p.m.–7 a.m.
January	4	14	0
February	2	7	0
March	7	21	0
April	24	72	2
May	51	154	6
June	74	223	18
July	125	376	20
August	101	407	20
September	63	190	8
October	51	155	6
November	29	89	7
December	16	49	1

III. Discussion of Proposed Rule

The bridge owner has requested to modify the operating regulation for the bridges, due to the limited number of requested openings of the bridges from 11 p.m. to 7 a.m., over a period of approximately three years. The data presented in the table above demonstrates that the requested modification may be implemented with de minimis impact to navigation. This proposed modification will allow the drawbridges to be maintained in the closed position from 11:01 p.m. to 6:59 a.m. and shall open on signal, if at least four hours advance notice is given.

IV. Regulatory Analyses

We developed this proposed rule after considering numerous statutes and Executive orders related to rulemaking. Below we summarize our analyses based on these statutes and Executive orders and we discuss First Amendment rights of protestors.

A. Regulatory Planning and Review

Executive Orders 12866 and 13563 direct agencies to assess the costs and benefits of available regulatory alternatives and, if regulation is necessary, to select regulatory approaches that maximize net benefits. Executive Order 13771 directs agencies to control regulatory costs through a budgeting process. This NPRM has not been designated a ''significant regulatory action,'' under Executive Order 12866. Accordingly, the NPRM has not been reviewed by the Office of Management and Budget (OMB) and pursuant to OMB guidance it is exempt from the requirements of Executive Order 13771.

This regulatory action determination is based on the fact that an average of only two bridge openings occurred per month from 11 p.m. to 7 a.m., from August 2017 through August 2020.

B. Impact on Small Entities

The Regulatory Flexibility Act of 1980 (RFA), 5 U.S.C. 601–612, as amended, requires federal agencies to consider the potential impact of regulations on small entities during rulemaking. The term ''small entities'' comprises small businesses, not-for-profit organizations that are independently owned and operated and are not dominant in their fields, and governmental jurisdictions with populations of less than 50,000. The Coast Guard certifies under 5 U.S.C. 605(b) that this proposed rule would not have a significant economic impact on a substantial number of small entities.

While some owners or operators of vessels intending to transit the bridges may be small entities, for the reasons stated in section IV.A above this proposed rule would not have a significant economic impact on any vessel owner or operator.

If you think that your business, organization, or governmental jurisdiction qualifies as a small entity

and that this rule would have a significant economic impact on it, please submit a comment (see **ADDRESSES**) explaining why you think it qualifies and how and to what degree this rule would economically affect it.

Under section 213(a) of the Small Business Regulatory Enforcement Fairness Act of 1996 (Pub. L. 104–121), we want to assist small entities in understanding this proposed rule. If the rule would affect your small business, organization, or governmental jurisdiction and you have questions concerning its provisions or options for compliance, please contact the person listed in the **FOR FURTHER INFORMATION CONTACT** section. The Coast Guard will not retaliate against small entities that question or complain about this proposed rule or any policy or action of the Coast Guard.

C. Collection of Information

This proposed rule would call for no new collection of information under the Paperwork Reduction Act of 1995 (44 U.S.C. 3501–3520).

D. Federalism and Indian Tribal Governments

A rule has implications for federalism under Executive Order 13132, (Federalism), if it has a substantial direct effect on the States, on the relationship between the National Government and the States, or on the distribution of power and responsibilities among the various levels of government. We have analyzed this proposed rule under that order and have determined that it is consistent with the fundamental federalism principles and preemption requirements described in Executive Order 13132.

Also, this proposed rule does not have tribal implications under Executive Order 13175, (Consultation and Coordination with Indian Tribal Governments), because it would not have a substantial direct effect on one or more Indian tribes, on the relationship between the Federal Government and Indian tribes, or on the distribution of power and responsibilities between the Federal Government and Indian tribes. If you believe this proposed rule has implications for federalism or Indian tribes, please contact the person listed in the **FOR FURTHER INFORMATION CONTACT** section.

E. Unfunded Mandates Reform Act

The Unfunded Mandates Reform Act of 1995 (2 U.S.C. 1531–1538) requires Federal agencies to assess the effects of their discretionary regulatory actions. In particular, the Act addresses actions that may result in the expenditure by a State, local, or tribal government, in the aggregate, or by the private sector of $100,000,000 (adjusted for inflation) or more in any one year. Though this proposed rule will not result in such an expenditure, we do discuss the effects of this proposed rule elsewhere in this preamble.

F. Environment

We have analyzed this proposed rule under Department of Homeland Security Management Directive 023–01, Rev.1, associated implementing instructions, and Environmental Planning Policy COMDTINST 5090.1 (series), which guide the Coast Guard in complying with the National Environmental Policy Act of 1969 (NEPA) (42 U.S.C. 4321–4370f). The Coast Guard has determined that this action is one of a category of actions that do not individually or cumulatively have a significant effect on the human environment. This proposed rule promulgates the operating regulations or procedures for drawbridges. Normally such actions are categorically excluded from further review, under paragraph L49, of Chapter 3, Table 3–1 of the U.S. Coast Guard Environmental Planning Implementation Procedures.

Neither a Record of Environmental Consideration nor a Memorandum for the Record are required for this rule. We seek any comments or information that may lead to the discovery of a significant environmental impact from this proposed rule.

G. Protest Activities

The Coast Guard respects the First Amendment rights of protesters. Protesters are asked to contact the person listed in the **FOR FURTHER INFORMATION CONTACT** section to coordinate protest activities so that your message can be received without jeopardizing the safety or security of people, places or vessels.

V. Public Participation and Request for Comments

We view public participation as essential to effective rulemaking, and will consider all comments and material received during the comment period. Your comment can help shape the outcome of this rulemaking. If you submit a comment, please include the docket number for this rulemaking, indicate the specific section of this document to which each comment applies, and provide a reason for each suggestion or recommendation.

We encourage you to submit comments through the Federal eRulemaking Portal at *https://www.regulations.gov.* If your material cannot be submitted using *https://www.regulations.gov,* contact the person in the **FOR FURTHER INFORMATION CONTACT** section of this document for alternate instructions.

We accept anonymous comments. All comments received will be posted without change to *https://www.regulations.gov* and will include any personal information you have provided. For more about privacy and submissions in response to this document, see DHS's eRulemaking System of Records notice (85 FR 14226, March 11, 2020).

Documents mentioned in this NPRM as being available in this docket and all public comments, will be in our online docket at *https://www.regulations.gov* and can be viewed by following that website's instructions. Additionally, if you go to the online docket and sign up for email alerts, you will be notified when comments are posted or a final rule is published.

List of Subjects in 33 CFR Part 117

Bridges.

For the reasons discussed in the preamble, the Coast Guard proposes to amend 33 CFR part 117 as follows:

PART 117—DRAWBRIDGE OPERATION REGULATIONS

■ 1. The authority citation for part 117 continues to read as follows:

Authority: 33 U.S.C. 499; 33 CFR 1.05–1; and Department of Homeland Security Delegation No. 0170.1.

■ 2. Amend § 117.733 as follows:
■ a. Remove paragraphs (i) and (k);
■ b. Redesignate paragraphs (b) through (h) and (j) as paragraphs (d) through (k), respectively; and
■ c. Add new paragraphs (b) and (c).

The additions read as follows:

§ 117.733 New Jersey Intracoastal Waterway.

* * * * *

(b) The draw of the Route 88 Bridge, mile 3.0, across Point Pleasant Canal at Point Pleasant, shall operate as follows:

(1) From 7 a.m. to 11 p.m. the draw shall open on signal.

(2) From 11:01 p.m. to 6:59 a.m. the draw shall open on signal, if at least four hours advance notice is given.

(c) The draw of the Route 13 Bridge, mile 3.9, across Point Pleasant Canal at Point Pleasant, shall operate as follows:

(1) From 7 a.m. to 11 p.m. the draw shall open on signal.

(2) From 11:01 p.m. to 6:59 a.m. the draw shall open on signal, if at least four hours advance notice is given.

* * * * *

Dated: March 5, 2021.

L.M. Dickey,

Rear Admiral, U.S. Coast Guard, Commander, Fifth Coast Guard District.

[FR Doc. 2021–05154 Filed 3–25–21; 8:45 am]

BILLING CODE 9110–04–P

LIBRARY OF CONGRESS

U.S. Copyright Office

37 CFR Chapter III

[Docket No. 2021–1]

Copyright Alternative in Small-Claims Enforcement (''CASE'') Act Regulations

AGENCY: U.S. Copyright Office, Library of Congress.

ACTION: Notification of inquiry.

SUMMARY: The U.S. Copyright Office is issuing a notification of inquiry regarding its implementation of the Copyright Alternative in Small-Claims Enforcement (''CASE'') Act. The CASE Act establishes the Copyright Claims Board (''CCB''), an alternative forum in which parties may voluntarily seek to resolve certain copyright infringement and other claims. The Office must establish regulations to govern the CCB and its procedures, including rules addressing service of notice and other documents, waiver of personal service, notifications that parties are opting out of participating in the forum, discovery, a mechanism for certain claims to be resolved by a single CCB Officer, review of CCB determinations by the Register of Copyrights, publication of records, certifications, and fees. The statute also allows the Office to adopt several optional regulations, including regulations addressing claimants' permissible number of cases, eligible classes of works, the conduct of proceedings, and default determinations. The statute vests the Office with general authority to adopt regulations to carry out its provisions. To assist in promulgating these regulations, the Office seeks public comment regarding the subjects of inquiry discussed in this notification.

DATES: Initial written comments must be received no later than 11:59 p.m. Eastern Time on April 26, 2021. Written reply comments must be received no later than 11:59 p.m. Eastern Time on May 10, 2021.

ADDRESSES: For reasons of governmental efficiency, the Copyright Office is using the *regulations.gov* system for the submission and posting of public comments in this proceeding. All comments are therefore to be submitted electronically through *regulations.gov.* Specific instructions for submitting comments are available on the Copyright Office's website at *https://www.copyright.gov/rulemaking/case-act-implementation/.* If electronic submission of comments is not feasible due to lack of access to a computer and/or the internet, please contact the Office using the contact information below for special instructions.

FOR FURTHER INFORMATION CONTACT: John R. Riley, Assistant General Counsel, by email at *jril@copyright.gov,* Brad A. Greenberg, Assistant General Counsel, by email at *brgr@copyright.gov,* or Rachel Counts, Paralegal, by email at *rcounts@copyright.gov.* They can each be reached by telephone at 202–707–8350.

SUPPLEMENTARY INFORMATION:

I. Background

A. The CASE Act and the Copyright Claims Board

On December 27, 2020, the President signed into law the Copyright Alternative in Small-Claims Enforcement (''CASE'') Act of 2020.[1] The statute establishes the Copyright Claims Board (''CCB''), a voluntary tribunal in the Copyright Office (''Office'') comprised of three Copyright Claims Officers who have the authority to render determinations on certain copyright disputes that have a low economic value (''small copyright claims''). Congress created the CCB to address the significant challenges of litigating small copyright claims in federal court,[2] a problem analyzed in depth in the Office's 2013 policy report, *Copyright Small Claims.*[3] This report included model legislation that Congress drew on in developing the statute, and Congress incorporated the Office's report and supporting materials into the statute's legislative history.[4]

Prior to the CCB beginning operations, jurisdiction to hear copyright infringement suits resides exclusively in federal courts.[5] The statute does not displace or limit the ability to bring copyright infringement claims in federal court. Instead, the law provides an alternative forum to decide small copyright claims in a manner that is more accessible to *pro se* parties and other parties that otherwise could not afford to litigate their claims.[6]

The CCB has the authority to decide copyright infringement claims (asserted by copyright holders), claims seeking a declaration of noninfringement (asserted by users of copyrighted works or other accused infringers), and misrepresentation claims under 17 U.S.C. 512(f).[7] District courts can also refer parties to have their disputes decided by the CCB as part of their alternative dispute resolution programs.[8]

While the statute mandates the creation of the CCB, it does not change the underlying copyright law with respect to these disputes. The CCB will employ existing case law in making its determinations and, in the case of conflicting judicial copyright precedents that cannot be reconciled, the CCB ''shall follow the law of the Federal jurisdiction in which the action could have been brought if filed in a district court of the United States,'' or, if the action could have been brought in multiple jurisdictions, the jurisdiction that ''has the most significant ties to the parties and conduct at issue.''[9] All CCB determinations are non-precedential.[10] The CCB may consult with the Register of Copyrights on general issues of law, although, similarly to the Copyright Royalty Board (''CRB''), it cannot do so regarding the facts of any pending matter or the application of law to those facts.[11]

Participation in the CCB is voluntary for all parties.[12] In establishing the CCB, Congress adopted a system whereby respondents must be notified of a claim asserted against them, and have the opportunity to opt out of participating in this alternative forum.[13] As with private arbitration models, participants may consent to participate in CCB proceedings, waiving their ability to have a dispute heard in federal court including any right to a jury trial.[14] As noted below, default determinations are able to be reviewed and set aside by an Article III judge, as an additional safeguard for defaulting respondents.[15]

[1] Public Law 116–260, sec. 212, 134 Stat. 1182, 2176 (2020).

[2] *See, e.g.,* H.R. Rep. No. 116–252, at 18–20 (2019). Note, the statute's legislative history cited is for H.R. 2426, 116th Cong. (2019), the CASE Act of 2019, a bill largely identical to the CASE Act of 2020.

[3] U.S. Copyright Office, *Copyright Small Claims* (2013) *https://www.copyright.gov/docs/smallclaims/usco-smallcopyrightclaims.pdf* (''*Small Claims Report*'').

[4] H.R. Rep. No. 116–252, at 19.

[5] 17 U.S.C. 301(a); 28 U.S.C. 1338(a).

[6] H.R. Rep. No. 116–252, at 17.

[7] 17 U.S.C. 1504(c)(1)–(3).

[8] *Id.* 1509(b); *see* 28 U.S.C. 651.

[9] 17 U.S.C. 1503(b), 1506(a)(2); H.R. Rep. No. 116–252, at 21–22, 25–26.

[10] H.R. Rep. No. 116–252, at 21–22, 33.

[11] 17 U.S.C. 1503(b)(2); *see also id.* 802(f)(1)(A)(i) (parallel CRB provision).

[12] *See id.* at 1503(a), 1504(a); H.R. Rep. No. 116–252, at 17, 21.

[13] 17 U.S.C. 1506(g)(1), (i).

[14] H.R. Rep. No. 116–252, at 21; *Small Claims Report* at 97–99.

[15] 17 U.S.C. 1508(c)(1)(C).

If a party fails to comply with a CCB-ordered award, the party seeking relief will need to seek a district court order to enforce it.[16]

The CCB can award multiple types of relief. First, the CCB can award monetary relief of up to $30,000 per proceeding regardless of the number of works involved, exclusive of attorneys' fees and costs (discussed below).[17] This can include (1) actual damages and profits attributable to the infringement, or (2) statutory damages. When awarding statutory damages, the CCB must apply different monetary caps and availability criteria than those applied in federal court. Specifically, the CCB may award up to $15,000 in statutory damages per work infringed for works registered within the Copyright Act's section 412 time limits,[18] and up to $7,500 in statutory damages per work infringed for non-timely registered works (with a cap of $15,000 per proceeding for non-timely registered works). Additionally, when assessing statutory damages, the CCB may not consider or make any finding that an infringement was willful, which typically increase statutory damages in federal court.[19]

The CCB can only award reasonable costs and attorneys' fees if doing so would be in the interests of justice.[20] Costs and attorneys' fees are not included in the monetary damages caps,[21] but instead have their own limitations. When a party engages in bad-faith conduct, the CCB can award reasonable costs and attorneys' fees up to $5,000, or $2,500 for *pro se* claimants.[22] Bad-faith conduct includes where ''a party pursued a claim, counterclaim, or defense for a harassing or other improper purpose or without a reasonable basis in law or fact.'' [23] Such bad-faith conduct could include failure to prosecute, including failure to meet one or more deadlines or requirements set forth in the CCB's schedule without justifiable cause.[24]

Second, while the CCB cannot issue injunctive relief, it can require that an infringing party cease or mitigate its infringing activity, but only in the event such party agrees and that agreement is reflected in the proceeding's record.[25]

The CCB will be comprised of three Copyright Claims Officers and supported by at least two Copyright Claims Attorneys and additional support staff.[26] One Officer must have ''substantial familiarity with copyright law and experience in the field of alternative dispute resolution.'' [27] The other two Officers must possess ''substantial experience in the evaluation, litigation, or adjudication of copyright infringement claims'' and together must have ''represented or presided over a diversity of copyright interests, including those of both owners and users of copyrighted works.'' [28] These provisions are intended to ensure that the CCB is comprised of copyright experts, while ''ensur[ing] a balanced system sensitive to both sides of infringement claims'' and ''undertak[ing] a holistic analysis of infringement claims with an eye toward the resourceful resolution of disputes.'' [29]

The Officers' duties include ensuring that claims, counterclaims, and defenses are properly asserted, managing CCB proceedings and issuing rulings, requesting production of information and relevant documents, conducting hearings and conferences, facilitating settlements, maintaining records, providing public information, and ultimately rendering determinations and awarding monetary relief.[30] Copyright Claims Attorneys will assist the Officers in the administration of their duties and assist the public with understanding the CCB's procedures and requirements.[31]

After a determination is rendered, the CCB may reconsider it for clear error of law or fact, and parties may subsequently seek review from the Register of Copyrights to determine whether the Board abused its discretion in denying reconsideration.[32] The CCB's determinations may also be reviewed by a district court ''on limited but well-established grounds that parallel Section 10 of the Federal Arbitration Act''; that is, in the event of fraud, corruption, misrepresentation, or misconduct, or if the CCB exceeded its authority or failed to render a final determination concerning the subject matter.[33] In addition, in the event of a default determination, a district court may vacate, modify, or correct the determination if it is established that the default or failure to prosecute was due to excusable neglect.[34]

Congress directed the CCB to begin operations by December 27, 2021; the Register of Copyrights may, for good cause, extend that deadline by not more than 180 days.[35] The Officers must be appointed by the Librarian of Congress, after consultation with the Register,[36] and the Office must hire other staff, promulgate necessary regulations, and establish related procedures, public materials, and forms. It must operationalize its administration of the various services provided by the CCB and other units of the Office, such as filings, payment administration, and mail processing. Because information technology development is centralized at the Library of Congress, the Library's Office of the Chief Information Officer (''OCIO'') must also identify and deploy any necessary IT resources for the CCB, such as virtual hearing platforms and a case management system.

Congress vested the Office with broad regulatory authority to carry out the statute,[37] and specified that the Register shall ''provide for the efficient administration of the Copyright Claims Board, and for the ability of the Copyright Claims Board to timely complete proceedings instituted under this chapter, including by implementing mechanisms to prevent harassing or improper use of the Copyright Claims Board by any party.'' [38] Together, the statute and legislative history make clear that Congress intended for the Office to implement regulations in a manner that ''furthers the goals of the Copyright Claims Board'' [39] and establishes an ''efficient, effective, and voluntary'' forum for parties to resolve their disputes.[40]

[16] H.R. Rep. No. 116–252, at 22 (citing *Stern* v. *Marshall,* 564 U.S. 462, 491 (2011)); 17 U.S.C. 1508(a).

[17] Further, when parties elect to use the CCB's streamlined provisions for ''smaller claims,'' discussed below, total monetary damages are capped at $5,000 total damages. 17 U.S.C. 1506(z).

[18] *Id.* at 1504(e)(1)(A)(ii)(I).

[19] *Id.* at 1504(e)(1)(A)(ii)(III).

[20] *Id.* at 1506(y)(2).

[21] *Id.* at 1504(e)(1)(D).

[22] *Id.* at 1506(y)(2). ''In extraordinary circumstances,'' the CCB can award costs and attorneys' fees over these limits, but only ''where a party has demonstrated a pattern or practice of bad faith conduct'' and ''in the interests of justice.'' *Id.* at 1506(y)(2)(B).

[23] *Id.* at 1506(y)(2).

[24] *Id.* at 1506(v)(2), (y)(2).

[25] *Id.* at 1504(e)(2)(A)(i), (e)(2)(B). This provision also applies to parties making knowing material misrepresentations under section 512(f). *Id.* at 1504(e)(2)(A)(ii).

[26] *Id.* at 1502(b).

[27] *Id.* at 1502(b)(3)(iii).

[28] *Id.* at 1502(b)(3)(ii).

[29] *Small Claims Report* at 100–101.

[30] 17 U.S.C. 1503(a), 1506.

[31] *Id.* at 1503(a).

[32] *Id.* at 1506(w), (x).

[33] 17 U.S.C. 1508(c); H.R. Rep. No. 116–252, at 22; *see* 9 U.S.C. 10(a) (under the Federal Arbitration Act, arbitral awards may be vacated for corruption, fraud, undue means, evident partiality, misconduct, or exceeding the powers delegated to the arbitrators).

[34] 17 U.S.C. 1506(c)(1).

[35] Public Law 116–260, sec. 212(d), 134 Stat. at 2199.

[36] 17 U.S.C. 1502(b)(1).

[37] *Id.* at 1510(a)(1).

[38] *Id.*

[39] *Id.* at 1510(a)(2)(A).

[40] H.R. Rep. No. 116–252, at 23.

B. Overview of the Rulemaking Process

To establish necessary and appropriate regulations to govern the CCB, the Office seeks public comment on the subjects discussed below. The Office is issuing this notification of inquiry as the first step in promulgating the regulations required by the statute. The Office plans to subsequently publish multiple notices of proposed rulemaking, each focusing on one or more of the regulatory categories discussed below. The Office has concluded that this approach will help to efficiently and thoughtfully conduct the relevant regulatory proceedings in light of the scope of the statute and the Office's available resources. To aid the Office's review, it is requested that if a submission responds to more than one of the below categories, it be divided into discrete sections with headings clearly indicating the category being discussed in each section. Comments addressing a single category should also have a heading that clearly indicates which category is being discussed. The Office also notes that it tentatively expects to produce a CCB practice guide, which will not be a substitute for existing statutes, regulations, or case law, but will provide parties, potential parties, and the public at large with basic information concerning the CCB and its procedures. The Office has already established a web page describing the CCB, which will be frequently updated as implementation work proceeds.[41]

The Office encourages parties to file joint comments on issues of common agreement.[42] The Office will also consider holding informal meetings to gather additional information on discrete issues prior to publishing notices of proposed rulemaking, establishing guidelines for *ex parte* communications. Relevant guidelines will be issued at *https://www.copyright.gov/rulemaking/case-act-implementation/,* and will be similar to those imposed in other Office proceedings.[43] Any such communications will be on the record to ensure the greatest possible transparency, and will supplement, not substitute for, the written record.

While all public comments are welcome, the Office encourages parties to provide specific proposed regulatory language for the Office to consider and for others to comment upon. Similarly, it would be helpful for commenters replying to proposed language to offer alternate language for consideration.

Commenters are reminded that while the Office has regulatory authority to implement the statute, it is constrained by the law Congress enacted; the Office can fill statutory gaps, but will not entertain proposals that conflict with the statute.[44]

II. Subjects of Inquiry

A. Initiating CCB Proceedings, Notice, and Service of Notice and Claim

As the legislative history explains, the CCB is designed ''to meet the Due Process Clause's guarantee of fundamental fairness in a federal proceeding,'' [45] including through mechanisms providing for service of notice and claims and waiver of service provisions modeled after the Federal Rules of Civil Procedure's (''FRCP's'') Rule 4.[46] In many cases, service of the notice may be the respondent's introduction to the nature of the dispute and to the option to have the dispute resolved by the CCB. As discussed below, for a claim to become an active proceeding, it must go through multiple procedural safeguards, including an initial claim review by a CCB attorney and service of multiple notices to the respondent, with the corresponding opportunity to opt out of the proceedings.

The statute provides that a claim must first be reviewed by a CCB attorney for sufficiency under the statute and any relevant regulations before the claim and notice of service is served upon a respondent.[47] If the claim is reviewed and found to be noncompliant, the CCB will send the claimant a notice of noncompliance and the claimant can amend the claim within thirty days of receiving the notice, without paying an additional fee.[48] If the claim remains noncompliant after the amended version is refiled, the claimant can amend it again within an additional thirty-day period after receiving the CCB's second notice of noncompliance.[49] If the claimant does not file a compliant claim or misses either thirty-day refiling period, the claim will be dismissed without prejudice.[50] These rules equally apply to counterclaims.[51] Once approved by the CCB, the claim must be served on the respondent and proof of service must be filed within ninety days of such approval ''using a standardized process and notice format established by the Register.'' [52]

1. Content of Initial Notice

To ensure that respondents are provided with proper notice of the claims asserted against them, along with information enabling a non-represented party to understand what the CCB is, and the process required to elect to participate or decline to do so, the statute details certain elements that must be included in the initial notice accompanying the claim. In addition, the Office is required to create a prescribed notice form and is vested with regulatory authority to specify further requirements to be included.

At a minimum, the served notice must meet several requirements prescribed by statue. The notice must be in a form that describes the CCB and the nature of a CCB proceeding.[53] In addition, the notice must include ''a clear and prominent explanation of the respondent's right to opt out of the proceeding and the rights the

[41] *Copyright Small Claims and the Copyright Claims Board, https://copyright.gov/about/small-claims* (last visited Mar. 21, 2021).

[42] *See, e.g.,* NCTA—The internet & Tele. Ass'n & Motion Picture Ass'n *Ex Parte* Letter (May 20, 2020), *https://www.copyright.gov/rulemaking/section111/ncta-mpa.pdf* (regarding regulations governing cable operators' reporting practices under 17 U.S.C. 111); Joint Comments of Nat'l Music Pubs.' Ass'n & Dig. Media Ass'n Submitted in Response to Copyright Royalty Board's November 5, 2018, Notification of Inquiry (Dec. 10, 2018) (regarding regulations relating to the MMA's enactment).

[43] *See, e.g.,* 83 FR 65747, 65753–54 (Dec. 21, 2018) (identifying guidelines for *ex parte* communications in MLC and DLC designation proceeding); 82 FR 49550, 49563 (Oct. 26, 2017) (identifying guidelines for *ex parte* communications in the Office's ''Section 1201'' rulemaking); *see also, Ex Parte Communications,https://www.copyright.gov/rulemaking/mma-designations/ex-parte-communications.html* (last visited Mar. 21, 2021) (*ex parte* guidelines for MLC and DLC designation rulemaking); *Ex Parte Communications, https://www.copyright.gov/1201/2018/ex-parte-communications.html* (last visited Mar. 21, 2021) (*ex parte* guidelines for Seventh Triennial Section 1201 Proceeding, 2018).

[44] *See, e.g., Nat'l Cable & Telecomms. Ass'n* v. *Brand X internet Servs.,* 545 U.S. 967, 980 (2005) (''[A]mbiguities in statutes within an agency's jurisdiction to administer are delegations of authority to the agency to fill the statutory gap in reasonable fashion.'') (citing *Chevron, U.S.A., Inc.* v. *Nat. Res. Def. Council, Inc.,* 467 U.S. 837, 865–66 (1984)).

[45] H.R. Rep. No. 116–252 at 22.

[46] *Id.* (providing additional mechanisms, such as the ability to participate in hearings virtually).

[47] 17 U.S.C. 1506(f)(1); H.R. Rep. No. 116–252, at 22.

[48] 17 U.S.C. 1506(f)(1)(B).

[49] *Id.*

[50] *Id.*

[51] *Id.* at 1506(f)(2). Further, claims against online service providers for infringement via storage of, referral, or linking to infringing material that may be subject to 17 U.S.C. 512(b)–(d)'s limitations on liability must contain an additional claimant affirmation. The claimant must affirm that they previously notified the service provider of the claimed infringement and the service provider failed to remove or disable access to the material expeditiously, in accordance with the applicable section of 17 U.S.C. 512, or the claim will be dismissed without prejudice. *Id.* at 1506(f)(1)(C)(i).

[52] H.R. Rep. No. 116–252, at 31; 17 U.S.C. 1506(g).

[53] 17 U.S.C. 1506(g)(1).

respondent waives if it does not.'' [54] In particular, it must include a prominent statement that by not opting out of a CCB proceeding within sixty days of receiving the notice, the respondent ''loses the opportunity to have the dispute decided by a court created under article III of the Constitution of the United States'' and ''waives the right to a jury trial regarding the dispute.'' [55]

The Office now solicits comment regarding additional regulatory requirements to help ensure that the initial notice conveys a clear explanation of the CCB, deadlines associated with the pending claim, the ability and method for the respondent to opt out of the proceeding, and the benefits and consequences of participating or declining to do so. For example, FRCP 4, which prescribes the contents of a summons, requires a summons to name the court and parties, be addressed to the defendant, provide contact information for the plaintiff, state the time a defendant must appear, notify the defendant that failure to appear will result in a default judgment, and be signed by the clerk and bear the court's seal.[56] The Office solicits comments regarding whether analogous requirements would be appropriate for a notice to a CCB respondent.

The Office notes that a variety of federal and state courts provide templates for summonses, which are succinct documents of two to three pages. For example, the Central District of California provides a fillable PDF that can be digitally signed by the process server; typical for federal court, it references the relevant rules of civil procedure but does not provide explanatory information.[57] Cook County, Illinois provides a similar form for state proceedings, but its form includes additional explanatory language as well as a list of hotlines to call for more information.[58] It begins:

> You have been named a defendant in the complaint in this case, a copy of which is hereto attached. You are summoned and required to file your appearance, in the office of the clerk of this court, within 30 days after service of this summons, not counting the day of service. If you fail to do so, a judgment by default may be entered against you for the relief asked in the complaint. THERE WILL BE A FEE TO FILE YOUR APPEARANCE. To file your written appearance/answer YOU DO NOT NEED TO COME TO THE COURTHOUSE.

Further tailored to *pro se* participants, the form for a small claims summons provided by the Superior Court of New Jersey small claims division, provides stark warnings to respondents and explains the small claims process.[59] It reads:

> YOU ARE BEING SUED!
>
> IF YOU WANT THE COURT TO HEAR YOUR SIDE OF THIS CASE, YOU MUST APPEAR IN COURT. IF YOU DO NOT, THE COURT MAY RULE AGAINST YOU. READ ALL OF THIS PAGE AND THE NEXT PAGE FOR DETAILS.
>
> In the attached complaint, the person suing you (who is called the plaintiff) briefly tells the court his or her version of the facts of the case and how much money he or she claims you owe. You are cautioned that if you do not come to court on the trial date to answer the complaint, you may lose the case automatically, and the court may give the plaintiff what the plaintiff is asking for, plus interest and court costs.

The summons is offered in Spanish as well as English.[60]

Because a CCB attorney must review the claim for sufficiency before a claimant is allowed to proceed with service upon the respondent, the Office is tentatively inclined to require the inclusion of a docket number assigned by the CCB on the notice as well as the claim. The docket number (or similar unique identifier) could be used by the respondent to access information regarding the proceeding, including how to opt out of a proceeding. The Office queries whether additional data beyond inclusion of the docket number (with ability to verify the proceeding on a CCB website or case management system) should be required to provide indicia that the notice relates to an official government proceeding.

In addition, because the CCB is designed to be accessible to participants who are not represented by attorneys, the Office is tentatively planning to require links to the Office's public information about the CCB to be included on the notice.[61] The Office solicits comments on specific educational information that may be helpful to include, while being mindful that the notice must remain easy to understand and avoid overwhelming respondents. For example, should the notice provide information describing copyright or copyright infringement, as well as potential defenses that may be available to a respondent, such as fair use?

The Office seeks comments on each specific field of information that claimants should be required to include in the notice. In addition, the Office is considering the content of the prescribed notice form, and welcomes public input. In responding, parties are encouraged to provide specific suggestions for language to be included on the form to describe the CCB and the decision facing the respondent, including by submitting sample notice forms if they desire.

2. CCB Respondent Notifications (Second Notice)

In addition to the initial notice sent by the claimant, the statute requires that the Register promulgate regulations ''providing for a written notification to be sent by, or on behalf of, the Copyright Claims Board to notify the respondent of a pending proceeding.'' [62] Similar to the initial notice, this notice must ''include information concerning the respondent's right to opt out of the proceeding, the consequences of opting out and not opting out, and a prominent statement that, by not opting out within 60 days after the date of service . . . the respondent loses the opportunity to have the dispute decided by a court created under article III of the Constitution of the United States'' and ''waives the right to a jury trial regarding the dispute.'' [63]

This notice supplements the initial notice served by the claimant and is intended to facilitate understanding of the official nature of the documents and proceeding, encourage a respondent to review the materials, and overall, increase the likelihood that a respondent engages with the asserted claim and knowingly elects to proceed or opt out of the CCB proceeding. The Office seeks public input on any issues that should be considered relating to the second notice, including but not limited to its content and how to ensure that recipients understand that it is an official Federal Government notification. The Office also invites suggestions regarding the format and procedure for sending the second notice, considering that Congress allows such notices to be sent ''by, or *on behalf of*'' the CCB. For example, should the Office create the notice and post it on the proceeding's docket for the claimant to download and deliver to the respondent? Should the Office require it

[54] H.R. Rep. No. 116–252, at 22; 17 U.S.C. 1506(g)(1).

[55] 17 U.S.C. 1506(g)(1).

[56] Fed. R. Civ. P. 4(a)(1).

[57] Admin. Off. of the U.S. Cts., *Summons in a Civil Action* (June 2012) *https://www.uscourts.gov/sites/default/files/ao440.pdf* (form AO 440).

[58] Clerk for the Circuit Court of Cook County, *Summons* (Dec. 2020), *http://www.cookcountyclerkofcourt.org/Forms/pdf_files/CCG0001.pdf* (form CCG 0001 A).

[59] New Jersey Courts, *Small Claims Summons and Return of Service* (Sept. 2018), *https://njcourts.gov/forms/10534_appendix_xi_a2.pdf.*

[60] *Id.*

[61] *Copyright Small Claims and the Copyright Claims Board, https://copyright.gov/about/small-claims* (last visited Mar. 21, 2021).

[62] 17 U.S.C. 1506(h).

[63] *Id.* at 1506(h)(1).

to be delivered in hard copy or by email, and how should delivery be documented? Given the small dollar value nature of the claims, and similar standards for federal court, the Office is not inclined to require physical delivery by a method other than the U.S. Postal Service. Similarly, if the CCB itself is responsible for serving the second notice, rather than generating and providing the notice to the claimant who would make service on the CCB's ''behalf,'' this would require additional Office operational resources.

3. Service of Process and Designated Agents

After a CCB attorney has reviewed a claim and found it suitable to proceed, a claimant must serve notice of the proceeding and a copy of the claim on the respondent either via personal service or pursuant to waiver of personal service.[64] Personal service may be effected by someone who is both ''not a party to the proceeding and is older than 18 years of age'' [65] and both service and waiver of service may only occur within the United States.[66] Proof of service must be filed with the CCB within ninety days after the CCB determines that the claim is suitable for resolution.[67] The statute includes separate rules of service for individuals and corporations, partnerships, and unincorporated associations, including those organizations using designated service agents. No claims can be brought ''by or against a Federal or State governmental entity.'' [68]

Service on an individual [69] may be accomplished by using procedures analogous to those in the FRCP.[70] Service can be accomplished by ''complying with State law for serving a summons in an action brought in courts of general jurisdiction in the State where service is made.'' [71] Service can also be accomplished by ''leaving a copy of the notice and claim at the individual's dwelling or usual place of abode with someone of suitable age and discretion who resides there.'' [72] Finally, service on an individual can be accomplished by ''delivering a copy of the notice and claim to an agent designated by the respondent to receive service of process or, if not so designated, an agent authorized by appointment or by law to receive service of process.'' [73]

Like individuals, corporations, partnerships, or unincorporated associations can be served ''by complying with State law for serving a summons in an action brought in courts of general jurisdiction in the State where service is made.'' [74] These organizations can also be served by delivering the notice and claim to ''an officer, a managing or general agent, or any other agent authorized by appointment or by law to receive service of process in an action brought in courts of general jurisdiction in the State where service is made.'' [75]

Under the statute, such corporations, partnerships, or unincorporated associations may elect to receive CCB claim notices via a designated service agent.[76] The Office is required to establish regulations governing this designated service agent option and to ''maintain a current directory of service agents that is available to the public for inspection, including through the internet.'' [77] The Office may charge these organizations a fee to maintain the designated service agent directory.[78]

When commenting on aspects related to the CCB's service agent directory, parties may want to review the Office's existing designated agent directory for online service providers, created pursuant to the Digital Millennium Copyright Act (''DMCA'').[79] Under the DMCA, the Office has promulgated regulations setting forth requirements for service providers to designate agents to receive notifications of claimed infringement,[80] and maintains a centralized online directory of those agents.[81] The directory allows the public to search by service provider and view both current and historical designated agent information, and is populated automatically with information supplied by service providers through the Office's online system.[82] To designate an agent in that system, a service provider must supply its full legal name, physical street address, any alternate names used by the service provider, and the name, organization, physical mail address, telephone number, and email address of its designated agent. The registration process costs $6 per designation and must be renewed every three years.

Commenters are encouraged to discuss whether and to what extent the Office should look to its DMCA designated agent regulations with respect to implementing the statute's service agent directory. The Office is interested in comments on whether and how a corporate parent should identify its progeny and how to make the database easy to update, search, and use. Further, and as noted in the section on fees below, the Office requests parties' comments on the appropriate fee to ''cover the costs of maintaining the directory.'' [83]

The statute also allows a respondent to waive personal service by returning a signed form to the CCB. The claimant must provide this form to the respondent ''by first class mail or by other reasonable means'' and return of the form must be at no cost to the respondent.[84] The claimant's waiver request must be in writing, include a notice of the proceeding and a copy of the claim, state the date the request was sent, and provide the respondent thirty days to respond.[85] The personal service waiver does not constitute a waiver of the respondent's right to opt out of the proceeding.[86]

The Office may establish additional regulations governing commencing proceedings, personal service, and the personal service waiver request.[87] The statute requires the Office to enact regulations for service of any documents submitted or relied upon in a CCB proceeding, other than the notice of the proceeding and the copy of the claim.[88]

The Office seeks public input on any issues that should be considered relating to the CCB's service requirements, including but not limited to waiver and the service of documents

[64] *Id.* at 1506(g). The copy of the claim served must be the same as the claim that was filed with the CCB. *Id.* at 1506(g)(2).

[65] *Id.* at 1506(g)(3).

[66] *Id.* at 1506(g)(9); H.R. Rep. No. 116–252, at 32.

[67] 17 U.S.C. 1506(g).

[68] *Id.* at 1504(d)(3). The Office invites commenters to address whether the phrase ''Federal or state Governmental entity'' will be clearly understood by potential claimants.

[69] For a minor or an incompetent individual, service can only be effected by ''complying with State law for serving a summons or like process on such an individual in an action brought in the courts of general jurisdiction of the State where service is made.'' 17 U.S.C. 1506(g)(4), (8).

[70] *See* Fed. R. Civ. P. 4(e).

[71] 17 U.S.C. 1506(g)(4)(A).

[72] *Id.* at 1506(g)(4)(C).

[73] *Id.* at 1506(g)(4)(D).

[74] *Id.* at 1506(g)(5)(A)(i).

[75] *Id.* at 1506(g)(5)(A)(ii). If the service agent is ''one authorized by statute and the statute so requires,'' the claimant must also mail a copy of the notice and claim to the respondent. *Id.*

[76] *Id.* at 1506(g)(5)(B).

[77] *Id.*

[78] *Id.*

[79] *See id.* at 512(c)(2).

[80] 37 CFR 201.38.

[81] *DMCA Designated Agent Directory, https://copyright.gov/dmca-directory* (last visited Mar. 21, 2021).

[82] From a user experience perspective, commenters may also wish to access the Office's searchable database of Pre-1972 Sound Recordings. *Schedules of Pre-1972 Sound Recordings, https://www.copyright.gov/music-modernization/pre1972-soundrecordings/search-soundrecordings.html* (last visited Mar. 21, 2021).

[83] 17 U.S.C. 1506(g)(5)(B).

[84] *Id.* at 1506(g)(6).

[85] *Id.* at 1506(g)(6)(A)–(B).

[86] *Id.* at 1506(g)(7)(A).

[87] *Id.* at 1506(e), (g), (g)(6).

[88] *Id.* at 1506(j).

other than the initial notice and claim. To facilitate efficiency of communication with respect to claims brought by parties outside the United States, the Office inquires whether foreign claimants should be required to designate a domestic service agent and to provide such information to respondents.

B. Opt-Out Provisions

Generally, respondents who do not wish to have a claim heard by the CCB can opt out of proceedings on a case-by-case basis. The statute includes two additional opt-out provisions: a blanket opt-out for libraries and archives who do not wish to participate in any CCB proceedings and a separate opt-out for parties who receive notice that they are class members in a pending class action involving the same transaction or occurrence as the CCB proceeding. The Office is directed to establish regulations to govern these opt-out actions.[89]

1. Respondent's Opt-Out

As outlined above, after being properly served, respondents may opt out of a CCB proceeding by providing written notice to the CCB within sixty days of the date of service, although the CCB can extend that 60-day period in the interests of justice.[90] If a respondent does not opt out in a timely manner, the proceeding will become active and the respondent will be bound by the CCB's determination as provided for in section 1507(a).[91] If the respondent does opt out, the proceeding will be dismissed without prejudice.[92] The Office seeks public input on any issues that should be considered relating to the respondent's written opt-out notice, including the content of a notice and the methods that a respondent may use to execute that notice (*e.g.,* paper or electronic).

In addition, the Office solicits comments regarding whether it should create a publicly accessible list of entities or individuals who have opted out of using the CCB in prior proceedings, as well as any other considerations relevant to whether the CCB should reflect a system to recognize entities or individuals that wish to consistently opt out of CCB proceedings. On the one hand, Congress did not establish a blanket opt-out for any entities other than libraries and archives, and in that case, it did so expressly by statute. This suggests that the Office lacks authority to adopt other blanket opt-outs by regulation.[93] On the other hand, the Office understands that entities intending to consistently opt out may appreciate efficiency or at least a way to publicize their intentions, and that potential copyright owner claimants may also wish to avoid incurring filing fees as a result of serving claims upon entities who consistently opt out.

2. Library and Archives Opt-Outs

The statute requires the Office to promulgate regulations for libraries and archives to ''set forth procedures for preemptively opting out of proceedings before the Copyright Claims Board'' and ''compile and maintain a publicly available list of the libraries and archives that have successfully opted out.'' [94] For purposes of this provision, ''the terms 'library' and 'archives' mean any library or archives, respectively, that qualifies for the limitations on exclusive rights under [17 U.S.C.] 108.'' [95] Office regulations cannot require a library or archives to pay a fee to opt out of a CCB proceeding or require renewal of the opt-out decision.[96]

The Office seeks public input on any issues that should be considered relating to the library and archives opt-out regulations, including whether a library or archive should be required to prove or certify its qualification for the limitations on exclusive rights under 17 U.S.C. 108, and thus for the blanket opt-out provision, and how to address circumstances where a library or archives ceases qualifying. In particular, given the prevalence of libraries and archives being located within larger entities, including but not limited to colleges and universities or municipalities, the Office invites suggestions addressing which entities, principals, or agents may opt out on behalf of a library or archive, as well as any associated certifications. The Office also seeks input related to transparency and functionality considerations with respect to its publication of the list of libraries and archives that have opted out. Finally, the Office is interested in whether it should include a regulatory provision that specifies that this opt out extends to employees operating in the course of their employment.

3. Class Action Opt-Outs

Any party to an active proceeding before the CCB who receives notice of a pending class action arising out of the same transaction or occurrence as the proceeding before the CCB, in which the party is a class member, shall either seek to dismiss the CCB proceeding or opt out of the class action proceeding, ''in accordance with regulations established by the Register of Copyrights.'' [97] The Office seeks public input on any issues that should be considered relating to regulations governing dismissal or opt-outs related to class action proceedings, including specific proposed regulatory language.

C. Additional CCB Practice and Procedures

The Office also requests comment on specific practice and procedural issues: Discovery, defaults, certifications for the various filings made by participants, and procedures for ''smaller claims.'' As noted, the statute provides the Office with broad flexibility to regulate CCB proceedings.[98] In this regard, the Office heeds Congress's observation that ''[w]hile principles of federal procedure are relevant to the CASE Act, the Act is not intended to simply mimic federal practice'' and that the Office should ''tak[e] advantage of the grant of regulatory authority to create rules and procedures most appropriate to create an efficient dispute resolution forum that also affords due process protections.'' [99] In addition to those specific areas, the Office welcomes comment on other CCB practices and procedures.

1. Discovery

The statute allows for limited discovery in CCB proceedings. Discovery may include ''the production of relevant information and documents, written interrogatories, and written requests for admission,'' as established by Office regulations.[100] If a party makes a request for additional, limited discovery and has demonstrated good cause for that request, the CCB ''may approve additional relevant discovery, on a limited basis, in particular matters, and may request specific information and documents from participants in the proceeding and voluntary submissions from nonparticipants, consistent with the interests of justice.'' [101] If a party does not ''timely provide discovery materials in response to a proper request

[89] *Id.* at 1506(aa)(1), 1507(b)(2)(A).

[90] *Id.* at 1506(i).

[91] *Id.*

[92] *Id.*

[93] *See* Antonin Scalia & Bryan A. Garner, *Reading Law: The Interpretation of Legal Texts* 107 (2012); *see also Lindh* v. *Murphy,* 521 U.S. 320, 330 (1997) (describing ''negative implications raised by disparate provisions'').

[94] 17 U.S.C. 1506(aa)(2).

[95] *Id.* at 1506(aa)(4).

[96] *Id.* at 1506(aa)(3).

[97] *Id.* at 1507(b)(2).

[98] *Id.* at 1506(a)(1), 1510(a)(1).

[99] H.R. Rep. No. 116–252, at 23.

[100] 17 U.S.C. 1506(n).

[101] *Id.* at 1506(n)(1).

for materials that could be relevant to [disputed] facts'' after being provided notice and an opportunity to respond and upon good cause shown, the CCB may ''apply an adverse inference with respect to disputed facts'' against that party.[102]

Congress limited discovery in CCB proceedings to ''ensure that the proceedings are streamlined and efficient.'' [103] As described by the Office's *Copyright Small Claims* report, discovery in the federal courts is the ''primary reason for the length of federal court litigation'' and is associated with ''often substantial costs and potential for abuse by exploitative litigants.'' [104] While some discovery may often be necessary in a CCB proceeding, the Office is mindful that additional discovery could compromise the value and efficiency gained by using the CCB, in lieu of using the federal courts. The Office further notes that some state small claims systems adopt presumptions against any discovery at all.[105]

The Office seeks public input on any issues that should be considered relating to discovery in CCB proceedings, including but not limited to a limit on the number of interrogatories and requests for admission allowed without leave, what constitutes ''good cause'' to request additional information, standards for determining when information is confidential, and which provisions of FRCP Rule 26 should or should not be imported or adapted into the CCB's regulations. For example, are there circumstances where a Rule 26(f) conference is appropriate, and if so, should the Office require the use of a specific template that sets out proposed deadlines and allows parties to fill in blanks? In cases where discovery extends to production of electronically stored information (''ESI''), should the CCB create rules specifically relating to ESI? In responding, commenters are encouraged to direct the Office to any practices or model rules of specific jurisdictions, and describe how their functioning may be worth emulating or avoiding.

2. Protective Orders

Any documents or testimony that contain confidential information can be subject to a protective order issued by the CCB, upon the request of a party and for good cause shown.[106] In considering issues related to discovery, commenters are encouraged to address to the CCB's handling of confidential information (including the redacting of such information) and the issuance of protective orders. For example, should the CCB adopt a default model protective order that the parties can enter into, with appropriate adaptations as needed? In addressing this topic, commenters may wish to review the Copyright Royalty Board's confidentiality and redaction regulations and recent protective orders,[107] or provide the Office with model rules from jurisdictions that may prove useful.

3. Respondent's Default and Claimant's Failure To Prosecute

Where a proceeding becomes ''active,'' *i.e.,* the respondent has not timely opted out of the CCB process, and the respondent ''has failed to appear or has ceased participating in the proceeding,'' the CCB may enter a default determination.[108] To obtain a default determination, the claimant must ''submit relevant evidence and other information in support of the claimant's claim and any asserted damages.'' [109] The CCB must then evaluate this evidence, including any other requested submissions, and determine if those materials are sufficient to support a finding in the claimant's favor and, if so, any appropriate relief and damages.[110]

If the CCB determines that a default judgment is proper, it must prepare a default determination and provide a written notice to all the respondent's addresses reflected in the CCB's proceeding records, including email addresses, giving the respondent thirty days to submit an opposition to the proposed default determination.[111] If the respondent timely responds to the CCB's notice, the CCB must consider the response when issuing its determination, which is then not considered a ''default.'' [112] If the respondent does not respond to the notice, the CCB ''shall proceed to issue the default determination as a final determination,'' although the CCB ''may, in the interests of justice, vacate the default determination.'' [113] A federal court can also vacate the default determination ''if it is established that the default . . . was due to excusable neglect.'' [114]

As Congress made clear, the statute ''establishes a strong presumption against default judgments'' and provides greater protections against default than in the federal courts.[115] The statute also gives the Office the authority to supplement the statutory default rules by establishing additional requirements that must be met before the CCB can enter a default determination.[116] The Office seeks public input on any issues that should be considered relating to a respondent's default, including but not limited to regulations regarding proof of damages in a default proceeding.[117]

The statute also contains rules regarding a claimant's failure to complete service and failure to prosecute. If a claimant does not complete service on a respondent within ninety days of the CCB approving the claim, the CCB will dismiss the proceeding without prejudice.[118] After a proceeding becomes active, if a claimant fails to meet one or more deadlines or requirements set forth in the CCB's schedule without justifiable cause, the CCB may dismiss the claimant's claims.[119] The CCB must first provide the claimant written notice that it has missed a deadline and a thirty-day period to respond to the notice, and must consider the claimant's response, if any, before dismissing the claims.[120] As noted above, failure to prosecute can constitute bad-faith conduct, potentially subjecting the claimant to pay the respondent's costs and attorneys' fees.[121]

4. Smaller Claims

The Office is required to promulgate regulations for a single CCB Officer to hear and resolve ''smaller claims,'' *i.e.,* claims involving $5,000 or less (exclusive of any attorneys' fees and

[102] *Id.* at 1506(n)(3).

[103] H.R. Rep. No. 116–252, at 17.

[104] *Small Claims Report* at 13.

[105] *See, e.g.,* Commonwealth of Massachusetts, Trial Court of the Commonwealth, *Small Claims Standards* sec. 5:02, (Nov. 2001), *https://www.mass.gov/doc/small-claims-standards/download* (''Discovery is not routinely available'').

[106] 17 U.S.C. 1506(n)(2).

[107] *See, e.g.,* 37 CFR 303.5(k) (rules governing exclusion or redaction of personally identifiable information); Protective Order, *Determination of Rates and Terms for Digital Performance of Sound Recordings and Making of Ephemeral Copies to Facilitate Performances (Web V),* No. 19–CRB–0005–WR (2021–2025) (June 24, 2019), *https://app.crb.gov/document/download/4012.*

[108] 17 U.S.C. 1506(u) (The respondent's failure to appear or participate ''can be demonstrated by the respondent's failure, without justifiable cause, to meet 1 or more deadlines or requirements set forth in the [CCB's proceeding] schedule.'').

[109] *Id.* at 1506(u)(1).

[110] *Id.*

[111] *Id.* at 1506(u)(2).

[112] *Id.* at 1506(u)(3).

[113] *Id.* at 1506(u)(4).

[114] *Id.* at 1508(c)(1)(C).

[115] H.R. Rep. No. 116–252, at 24.

[116] 17 U.S.C. 1506(u)(1).

[117] *See* H.R. Rep. No. 116–252, at 24–25.

[118] 17 U.S.C. 1506(v)(1).

[119] *Id.* at 1506(v)(2).

[120] *Id.*

[121] *Id.* at 1506(v)(2), (y)(2).

costs).[122] Congress expects that these smaller claim proceedings will ''otherwise have the procedural protections of any other claim before the Copyright Claims Board,'' [123] and that a determination issued under the smaller claims provisions will ''have the same effect as a determination issued by the entire Copyright Claims Board.'' [124] The Office seeks public input on any issues that should be considered relating to smaller claims proceedings, including but not limited to any regulations that will increase the efficiency of the single-Officer proceeding while retaining the CCB's standard procedural protections.

5. Other Rules of Practice and Procedure; Evidentiary Rules

While the discussion above identifies a number of filings and procedures related to the operation of the CCB from initiation of claims through the Board's rendering of determinations, it is not comprehensive. The Office solicits suggestions, including specific proposals, regarding other procedural rules that would be helpful to the CCB's goal of establishing an efficient dispute resolution forum while respecting due process protections.[125] Because the CCB is designed to be simpler and less formal than federal courts, the Office encourages plain language suggestions and urges commenters to consider what rules are necessary to codify by regulation and in what areas it is advisable for CCB Officers to retain discretion and flexibility.

In particular, the Office solicits comment regarding whether to propose adopting additional provisions of the FRCP on areas germane to the CCB's operations, with potential modifications to simplify them and make them more accessible. For example, commenters may consider addressing rules such as: Serving and filing pleadings and other papers (Rule 5); privacy protections for filings made with the court (Rule 5.2); computing and extending time for motion papers (Rule 6); pleadings allowed (Rule 7); disclosure statement (Rule 7.1); general and special rules of pleadings (Rule 8); form of pleadings (Rule 10); signing pleadings, motions, and other papers; representations to the Court, sanctions (Rule 11); defenses and objections (Rule 12); counterclaim and crossclaim (Rule 13); amended and supplemental pleadings (Rule 15); and scheduling and management (Rule 16).[126]

Beyond the Federal Rules, commenters are strongly encouraged to consider whether other rules or adjudicatory bodies may offer useful models. Most notably, various state court systems operate small claims courts, which may contain helpful language or approaches for the CCB to model.[127] Federal courts, too, often have model rules for their districts, including rules tailored to *pro se* representations. Comparable agency tribunals may also offer useful analogues. For example, the Copyright Royalty Board's regulations are codified at 37 CFR parts 350 through 355. Several Office regulations also address related issues such as certifications [128] and attestations,[129] confidentiality,[130] waiver, service of process upon the Office, and production of information by the Office.[131] In addition, the U.S. Patent and Trademark Office has promulgated rules governing procedures and practices with respect to operation of the Trademark Trial and Appeals Board as well as the Patent Trial and Appeals Board.[132]

Like other small claims tribunals, CCB proceedings are not subject to formal rules of evidence.[133] The CCB can consider relevant documentary and other nontestimonial evidence as well as relevant testimonial evidence.[134] The testimonial evidence must be submitted under penalty of perjury and is normally limited to parties' and non-expert witnesses' statements.[135] In exceptional cases, the CCB may permit expert witness testimony for good cause.[136] In addition to rules of procedure, the Office encourages parties to comment upon issues relevant to evidentiary rules.[137]

In responding, the Office invites commenters to propose specific regulatory language so that this notification may crystallize areas of agreement and disagreement among the commenting parties.

D. Public Access to Records and Proceedings; Certifications; Case Management System Considerations

The CCB will make its final determinations available on a publicly accessible website.[138] The CCB is also required to certify official records of its proceedings, including for review and confirmation of CCB determinations by a district court.[139] Additionally, the Office must establish regulations regarding publication of other CCB determination records and information, ''including the redaction of records to protect confidential information that is the subject of a protective order.'' [140]

To maintain and publish the CCB's records, the Office has requested that the OCIO provide the CCB with an electronic filing and case management system. The Office intends for this system to provide capabilities comparable to existing case management systems, such as, those operated in existing small claims courts, the Copyright Royalty Board's eCRB platform, or the federal courts' case management/electronic case files system, called PACER.[141] The system would provide a mechanism to publish CCB orders and determinations and other information, as well as written submissions to the CCB, including claims and responses, on a public-facing website.

In addition to specifically soliciting information regarding issuance of protective orders noticed above, the Office seeks public input on other issues relating to the CCB's provision of access to records and proceedings to the general public, as well as certification of records and determinations.

E. Register's Review of CCB's Denial of Reconsideration

The CCB's determinations are subject to reconsideration or amendment by the CCB itself, if a party submits a written

[122] *Id.* at 1506(z).

[123] H.R. Rep. No. 116–252, at 17.

[124] 17 U.S.C. 1506(z).

[125] *See* H.R. Rep. No. 116–252, at 23.

[126] Fed. R. Civ. P. 5, 5.2, 6, 7, 7.1, 8, 10–13, 15, 16.

[127] *See, e.g.,* Superior Court Rules—Small Claims (DC 2017) *http://www.dccourts.gov/sites/default/files/2017-05/Superior%20Court%20Rules%20of%20Procedure%20for%20the%20Small%20Claims%20and%20Conciliation%20Branch.pdf; see also* DC Small Claims and Conciliation Branch Handbook, *http://www.dccourts.gov/sites/default/files/matters-docs/Small_Claims_Handbook_Revised_May_2015.pdf.*

[128] *See, e.g.,* 37 CFR 201.4(c)(4)–(5) (recordation-related certifications), 210.10(j) (section 115 cumulative statements of account certification), 210.27(i) (section 115 monthly reports of usage certification for blanket licensees), 210.29(g) (Mechanical Licensing Collective's section 115 royalty statement certification).

[129] *See, e.g., id.* at §§ 201.4(d)(4) (redaction of personal identifying information), 201.17(e)(14) (statements of account submitted by cable systems), 201.38(c)(2) (DMCA designated agent attestation).

[130] *Id.* at § 210.34.

[131] *Id.* at part 205.

[132] *See id.* at parts 2, 7, 11, 42.

[133] 17 U.S.C. 1506(o); *Small Claims Report* at 126; *see e.g.,* District of Columbia Courts, *Small Claims Mediation* 2 (Sept. 2017), *https://www.dccourts.gov/sites/default/files/Small%20Claims%20Mediation%2009-17.pdf* (the DC small claims mediation program is expressly not subject to the Federal Rules of Evidence). *Cf.* Fed. R. Evid. (2020).

[134] 17 U.S.C. 1506(o).

[135] *Id.* at 1506(o)(2).

[136] *Id.*

[137] *See, e.g.,* Fed. R. Evid. (2020).

[138] 17 U.S.C. 1506(t)(3).

[139] *Id.* at 1503(a)(1)(I); 1508(b).

[140] *Id.* at 1506(t)(3).

[141] *See* eCRB, *https://app.crb.gov/;* Public Access to Court Electronic Records, *https://pacer.uscourts.gov/.*

request within thirty days of the final determination.[142] Where the CCB denies a party's request for reconsideration of a final determination, that party can request that the Register review the determination. Such review ''shall be limited to consideration of whether the Copyright Claims Board abused its discretion in denying reconsideration of the determination.'' [143] A request must be accompanied by ''a reasonable filing fee,'' to be established by regulation.[144] After other parties have had an opportunity to address the reconsideration request, the Register must either ''deny the request for review, or remand the proceeding to the Copyright Claims Board for reconsideration of issues specified in the remand and for issuance of an amended final determination.'' [145] The Office seeks public input on any issues relating to the Register's review, including any potential regulatory provisions addressing the substance of the request, *e.g.,* inclusion of the reasons the party believes the CCB abused its discretion, post-review procedures, and the amount of a reasonable filing fee.

F. Fees

The statute requires the Office to establish multiple fees associated with CCB proceedings. These include fees to commence a CCB proceeding,[146] whether before the full CCB or a single Officer, fees to initiate the Register's review of the CCB's denial of reconsideration,[147] and fees to ''cover the costs'' associated with maintaining the service agent directory.[148]

As noted above, there shall be no fee imposed upon libraries or archives filing a blanket opt-out of proceedings with the CCB.[149] The statute further states that ''[t]he sum total of . . . filing fees'' must be ''not less than $100, may not exceed the cost of filing an action in a district court of the United States'' (currently $400), and ''shall be fixed in amounts that further the goals of the Copyright Claims Board.'' [150] The Office tentatively interprets these monetary limits as referring to the collective costs associated with fees paid by claimants to initiate proceedings, given the provision's comparison to costs of filing an action in district court. For example, the Office does not believe a fee associated with an entity filing a notice of service agent needs to fall under this cap, since it would be paid by a different entity than a claimant and would not be associated with a particular proceeding.

The statute's fee-setting provisions augment the general fee-setting authority provided to the Office in section 708 of the Copyright Act, which authorizes the Register to fix fees for certain services, including CCB services, based on the cost of providing them.[151] The Office has previously interpreted this requirement to permit it to ''use fee revenue from some services to offset losses from others for which the fees are kept low to encourage the public to take advantage of the service.'' [152] As with most of its services, the Office intends to intake fees for the CCB via *pay.gov.*

The Office seeks public input on any issues that should be considered relating to CCB fees, including with respect to the amounts for specific fees. It is also interested in comments evaluating whether fees to commence a proceeding should be staggered to require an initial fee and an additional fee once the proceeding is active (*i.e.,* obligating claimants with proceedings that are likely to proceed to a determination to bear greater costs than claimants where respondents opt out), whether fees for consideration and determination by a single CCB Officer should be lower than fees for standard CCB proceedings, or any other related topics.

G. Permissible Number of Cases

The Office has the power to limit ''the permitted number of proceedings each year by the same claimant . . . in the interests of justice and the administration of the Copyright Claims Board.'' [153] As described by Congress, this power ''functions as both a docket management tool . . . and as protection against abusive conduct.'' [154] The Office expects the CCB to exercise this power, and notes the likelihood that any initial limitation may be revisited after the CCB has established its workflows and can better evaluate its expected workload. The Office seeks public input on any issues that should be considered relating to the initial limitation of the permitted number of proceedings each year by the same claimant in CCB proceedings, including whether the limitation should be based on a claimant's filings or active claims, other small claims tribunals' experiences with comparable limitations,[155] and how such a limitation may best be designed to prevent abusive conduct while preserving access for good-faith claimants.

H. Conduct of Parties and Attorneys

The statute has several provisions to preemptively deter frivolous, vexatious, or otherwise improper conduct, including the claim filing fee,[156] the ability for the Office to limit the number of claims an entity can bring each year,[157] the total monetary recovery limitation,[158] and the provision that a notice of a claim may be sent only after being reviewed by the CCB for statutory and regulatory compliance.[159] The statute also requires the Office to establish regulations requiring parties to certify that statements made in CCB proceedings are accurate and truthful.[160] Further, the statute contains provisions to address bad-faith conduct, including by awarding costs and attorneys' fees and barring repeat offenders from initiating claims before the CCB for twelve months.[161] These provisions demonstrate that Congress went to great lengths to address potential problems concerning bad-faith claimants. The Office is committed to thoughtful implementation of these provisions to deter both bad-faith conduct and misuse of CCB proceedings by those who have a genuine misunderstanding of the law.[162] The Office seeks public input on any issues that should be considered relating to parties' certification requirements and bad-faith conduct, including how the CCB can verify that filings do not contain fraudulent information, procedures for reporting bad-faith conduct, and whether the Office should prohibit attorneys who have been suspended from the practice of law from participating in CCB proceedings. For example, the U.S. Patent and Trademark

[142] 17 U.S.C. 1506(w).

[143] *Id.* at 1506(x).

[144] *Id.*

[145] *Id.*

[146] *Id.* at 1506(e)(3).

[147] *Id.* at 1506(x).

[148] *Id.* at 1506(g)(5)(B).

[149] *Id.* at 1506(aa)(3).

[150] *Id.* at 1510(c); *see* H.R. Rep. No. 116–252, at 28 n.1.

[151] 17 U.S.C. 708(a). Section 708 contains other requirements for setting certain fees, such as a requirement to conduct a fee study for Congress or limitations on fees for filing statements of account in connection with certain statutory licenses that do not appear to apply to CCB fees.

[152] *Copyright Office Fees, Notice of Proposed Rulemaking,* 83 FR 24054, 24055 (May 24, 2018).

[153] 17 U.S.C. 1504(g).

[154] H.R. Rep. No. 116–252, at 31.

[155] *See, e.g.,* Cal. Civ. Proc. Code 116.231; Mich. Comp. Laws 600.8407(2).

[156] 17 U.S.C. 1510(c).

[157] *Id.* at 1504(g).

[158] *Id.* at 1504(e)(1)(D).

[159] *Id.* at 1506(f)(1).

[160] *Id.* at 1506(e)(2), (y)(1).

[161] *Id.* at 1506(y)(2); *see also id.* at 1510(a)(1) (directing the Office to establish regulation ''implementing mechanisms to prevent harassing or improper use of the Copyright Claims Board by any party'').

[162] The Office is also committed to providing clear, accessible guidance to the public about the CCB's rules and procedures, outside of its regulations.

Office has adopted various rules with respect to the operation of the Patent Trial and Appeals Board and the Trademark Trial and Appeals Board, as well as for attorneys and entities prosecuting applications before the agency. Those rules address various issues, such as conduct and discipline, duties of candor, fraud prevention, and, if necessary, sanction, suspension, exclusion or censure.[163] Commenters are encouraged to suggest other models (including any adopted by state small claims courts), as well as to offer regulatory language tailored to the CCB specifically.

I. Other Subjects

While this notification outlines a variety of issues relevant to implementation of the CCB, the Office welcomes input on any issues not specifically identified that commenters believe are appropriate and within the Office's regulatory authority. Commenters should be aware that apart from this notification, the Office intends to separately publish a proposed rule regarding a process to expedite a registration decision for an unregistered work at issue before the CCB,[164] as well as a conforming technical edit to the Office's FOIA regulations.[165]

In some cases, the Office may defer exercising its regulatory authority until a later date. For example, the Office has the authority to limit claims regarding particular classes of works (*e.g.,* musical works, audiovisual works, architectural works, etc.) that the CCB can hear.[166] While the Office welcomes any suggestions regarding this authority now, it may delay exercising it until a later date, including potentially after the CCB is operational.

[163] *See, e.g.,* 35 U.S.C. 32 (authorizing the Patent and Trademark Office Director to ''suspend or exclude . . . from further practice . . . any person, agent or attorney shown to be in competent or disreputable''); 37 CFR 11.19(b) (grounds for disciplining or disqualifying practitioners); *see also* 37 CFR 1.56, 1.97 and 1.98, 41.128, 42.11 and 42.12; U.S. Patent and Trademark Office, *Scam Prevention, https://www.uspto.gov/patents/basics/using-legal-services/scam-prevention* (including general information to the public and a link to a publically available complaint form).

[164] 17 U.S.C. 1505(d). Before the CCB renders a determination in any infringement dispute, the work at issue must be registered by the Office and the other parties in the proceeding must have an opportunity to address the registration certificate. But the statute allows a party to file a claim with the CCB before the Office has issued a registration, as long as ''a completed application, a deposit, and the required fee for registration'' have been delivered to the Office. *Id.* at 1505(a)(1).

[165] *Id.* at 1504(t)(4).

[166] *Id.* at 1504(c).

Dated: March 23, 2021.

Regan A. Smith,

General Counsel and Associate Register of Copyrights.

[FR Doc. 2021–06322 Filed 3–25–21; 8:45 am]

BILLING CODE 1410–30–P

DEPARTMENT OF VETERANS AFFAIRS

38 CFR Part 38

RIN 2900–AR00

Veterans Legacy Grants Program

AGENCY: Department of Veterans Affairs.

ACTION: Proposed rule.

SUMMARY: The Department of Veterans Affairs (VA) proposes regulations to establish the Veterans Legacy Grants Program (VLGP). VA would establish grant application procedures and evaluative criteria for determining whether to issue funding to eligible entities to conduct cemetery research and produce VLGP educational materials. Educational materials would relate the histories of Veterans interred in national, State, or Tribal Veterans' cemeteries and would promote community engagement with those histories.

DATES: Comments must be received on or before May 25, 2021.

ADDRESSES: Comments may be submitted through *www.Regulations.gov* or mailed to: Director, Legislative and Regulatory Service (42E), Department of Veterans Affairs, 810 Vermont Avenue NW, Washington, DC 20420. Comments should indicate that they are submitted in response to ''RIN 2900–AR00—Veterans Legacy Grants Program.'' Comments received will be available at regulations.gov for public viewing, inspection, or copies.

FOR FURTHER INFORMATION CONTACT: Bryce Carpenter, Educational Outreach Programs Officer, National Cemetery Administration, Department of Veterans Affairs, 810 Vermont Avenue NW, Washington, DC 20420, (202) 461–5362. (This is not a toll-free telephone number.)

SUPPLEMENTARY INFORMATION: In Public Law 116–107, sec. 1 (Jan. 17, 2020) (codified at 38 U.S.C. 2400 note), Congress authorized VA to establish a grant program to conduct cemetery research and produce educational materials for the VLGP. VA proposes to add new 38 CFR 38.710 through 38.785 to implement this new grant authority.

The mission of the National Cemetery Administration (NCA) is to honor Veterans and their eligible family members with final resting places and lasting tributes, thus ensuring that ''No Veteran Ever Dies.'' In 2016, the Veterans Legacy Program (VLP) was established to support NCA's mission to ensure ''No Veteran Ever Dies'' through contract awards to educational entities to conduct cemetery research and produce educational tools for the public to utilize and learn about the histories of Veterans interred in VA national cemeteries, as well as VA grant-funded State and Tribal Veterans' cemeteries. By engaging educators, students, researchers, and the public, VLP enabled NCA to share the stories of those who served and build an understanding and appreciation of the reasons national cemeteries are considered national shrines. Through contract awards from 2016 to 2020, VLP funded research for 19 projects, which produced more than 573 Veteran biographies, 17 documentary films about Veterans, and 6 Veterans' cemetery walking tours. Additionally, under VLP contracts issued to date, VLP will have engaged almost 9,000 kindergarten through high school students, more than 200 undergraduate students, nearly 40 graduate students, more than 50 scholars, and more than 300 teachers.

As the VLP program grew, VA sought authority to award grants to entities rather than request contract proposals from educational institutions to carry out this mission-critical function. Public Law 116–107, sec. 1 (codified at 38 U.S.C. 2400 note), enacted in early 2020, authorizes VA to make such grants. Under that authority, this proposed rule would establish regulations to govern VA's funding of VLP projects through more effective and efficient grant awards that would be administered by the VLGP. The proposed regulations address the purpose and use of grant funds and set out the general process for awarding a grant, as well as criteria for evaluating grant applications, priorities related to the award of a grant, and other general requirements and guidance for administering the VLGP.

Section 38.710 sets forth the purpose of the VLGP, which is to fund projects for research related to national, State, or Tribal Veterans' cemeteries, to present such research through site hosting and other digital technologies, and to produce educational materials that teach about the history of Veterans interred in those cemeteries. Grants may also fund projects that promote community engagement with the histories of Veterans interred in those locations.

Because this is a new VA authority, we propose to define terms in § 38.715 that would be referenced in §§ 38.710 through 38.785. For the ''Notice of Funding Availability (NOFA)'' definition, we propose to cite to § 38.725, which would include information such as application requirements and filing deadlines, as well as basic scoring information, timeframes for grant awards and payments, and a provision for other requirements that give VA flexibility to determine and target areas of focus, according to agency need. We also propose to cite to 2 CFR 200.203, which provides guidance for all Federal grants. We define generic administrative terms such as ''applicant'' and ''grantee'' to reflect change in status as an entity moves through the grant review process.

Additionally, in § 38.715, we propose to define the term ''eligible recipient'' as set forth in Public Law 116–107, sec. 1(a)(2); define the term ''institution of higher learning'' similar to the definition of that term in 38 U.S.C. 3452(f); and define the term ''local educational agency'' similar to the definition of that term in 20 U.S.C. 7801(30). Because the definition of ''local educational agency'' in sec. 7801(30) also includes the term ''State educational agency,'' VA proposes to include it as an eligible recipient for Veterans Legacy grants. The public law specifies that an eligible recipient can be a ''non-profit entity'' that has a demonstrated history of community engagement but did not define that term. We would limit the definition of ''non-profit entity'' to mean an organization chartered under 26 U.S.C. 501(c)(3). VA proposes to require each non-profit entity to provide information about its history of community engagement as it pertains to projects described in the NOFA publication for that year. Flexibility is needed for VA's annual publication of the NOFA's based on VA's analysis of grant project needs, emerging trends in Veteran histories, and other significant milestone events related to military service.

The statute also allows VA to determine other recipients that may be eligible to receive a Veterans Legacy grant, so VA proposes to include ''educational institutions'' as defined in 38 U.S.C. 3452(c). This term is commonly used to capture the full spectrum of school systems that fall outside the scope of institutions of higher learning, such as public or private elementary and secondary schools, as well as vocational schools and other trade, professional, and scientific schools. The inclusion of ''educational institutions,'' as defined in 38 U.S.C. 3452(c), is necessary given NCA's previous contracting experience for Veterans Legacy projects with these entities. VA intends to continue the practice of recognizing educational institution recipients, which include elementary and secondary schools, as eligible entities for Veterans Legacy grant purposes.

Further, we propose to define terms such as ''educational materials'' to clarify one of the purposes of the VLGP, which is to utilize the research conducted by grantees to develop instructional materials, such as lesson plans and other teaching aids. While these teaching aids are contemplated for students from kindergarten through the 12th grade, these materials may also be used for outreach events at VA national cemeteries. Additionally, we propose to define ''community engagement'' to describe the strategic interaction with certain groups of people to identify and address issues related to the legacy of Veterans.

VA proposes to annually publish in the **Federal Register** a NOFA that would set out the grant application and other requirements. The Office of Management and Budget (OMB) requires the issuance of a NOFA and publication of this information to ensure that eligible entities have the information required to apply for grants. Proposed § 38.725 sets out certain provisions that would be included in a NOFA, including instructions on how interested parties could apply for a grant. At a minimum, we propose the NOFA include application filing requirements, deadlines for submission, estimates of the total available funding, and the maximum funding availability to a single eligible recipient. For example, eligibility for a Veterans Legacy grant may require an entity to be accredited to ensure that an educational institution has the operational capacity to manage a Federal grant. This type of requirement would minimize the risk of default recovery actions posed by awarding grants to non-accredited institutions. These components are consistent with 2 CFR 200.203, which requires the issuance of a NOFA that includes information describing the funding opportunity, eligible entities, application submission, application review, and Federal award administration. Other information we propose to be imparted in a NOFA includes minimum scores that an applicant must receive for VA review, timeframes and manner of grant payments, and other information VA deems necessary for the application process that is commonly utilized in similar Federal educational and research grant programs.

In § 38.720, we would provide general information about grant requirements that limit VLGP grants to eligible entities to the maximum funding availability specified in the NOFA. We would clarify that like most other educational grants, the VLGP grant is not a course buyout for teachers to use as a substitute for course instruction during an academic year. The expectation for these grants is to provide maximum resources to enable student research on Veterans and to produce that research into publicly-accessible formats. Additionally, we would clarify that the VLGP grant is not a Veterans' benefit and that decisions on grant applications are not subject to appellate review. In this section, we would inform applicants that if VA requires a grantee to provide matching funds as a condition for receiving a VLGP grant, those criteria will be included in the NOFA published in that year.

In § 38.730, we would provide general information about the minimum requirements for grant applications that applicants must address to be considered for a VLGP grant. To apply for a VLGP grant, applicants would be required to submit a complete grant application package through *Grants.gov* (*http://www.grants.gov*). Use of this portal is a familiar and efficient means for applicants to submit grant applications. Applicants would need to provide a project description that demonstrates the best approach to accomplish the required results set out in the NOFA. The description would have to identify any project team partner entities, provide a detailed plan of projected milestones, and demonstrate the applicant's ability and capacity to administer the grant project. VA would consider an applicant's past experience with similar projects as defined by the NOFA or related work in that particular field or subject matter. Applicants would need to propose a budget of costs and proposed expenditures, to include compensation and honoraria. Other budgetary requirements may be included in the NOFA for that year. These disclosures would help VA assess the extent to which an applicant has considered all aspects of planning and the likelihood of successful completion of grant objectives. Further, if matching funds are required by the NOFA, the applicant would have to provide evidence of secured cash matching in a 1-to-1 ratio or an explanation of the applicant's ability to secure commitments to receive such funding. In this section, VA also proposes a catch-all provision to allow

for flexibility in setting grant application requirements that would be published in the NOFA to tailor projects as needed.

As proposed under § 38.740, VA would review completed grant applications to ensure they meet the minimum criteria proposed in § 38.730 and score them as specified in the NOFA as published under § 38.725. Applications would have to be timely submitted and meet the minimum application and NOFA requirements, which VA would publish annually for grant projects contemplated for that year. The NOFA would include information about the scoring process and clarify the minimum point totals per scoring category that an applicant must receive to be considered for a grant. VA would rate all grant applications against each other to determine the likelihood of successful implementation of the grant projects published in that year's NOFA and would consider other factors to qualify for the grant award, as explained in proposed § 38.735. Factors such as an applicant's past performance on a prior award, an applicant's fiscal integrity, or risk assessments are examples of other considerations that would affect VA's scoring of grant applications.

As proposed under § 38.745, VA may approve VLGP grant applications in whole or in part subject to conditions VA deems necessary to ensure full flexibility in meeting Departmental or programmatic goals. VA may also disapprove an application because it does not rank sufficiently high in relation to other applications. Further, VA may defer action on applications for reasons that require further review or additional time to meet grant requirements, such as lack of funds. In all instances, VA would convey decisions in writing to applicants on all grant submissions.

For grant awards, VA proposes in § 38.755 to memorialize the awards in an agreement, in accordance with the terms set out in §§ 38.755 and 38.760 and in the NOFA published for that year. As a condition of receiving a VLGP grant, grantees and grantee subrecipients (*e.g.,* contractors and other entities utilized by a grantee to execute grant requirements) would have to agree to operate their programs in accordance with VA regulations in proposed §§ 38.710 through 38.785, Federal regulations in 2 CFR part 200, and the information provided in the grant application. Part 200 provides uniform guidance and government-wide terms and conditions for the management of awards and the administration of Federal grants, and this rulemaking provides additional guidance and conditions for the administration of VLGP grants in particular. Adherence to the government-wide rules would be mandatory, and compliance with the additional rules specific to VLGP grants would ensure program integrity across all VLGP grants VA awards. Included among those terms would be the grantees' compliance with recordkeeping and reporting requirements, provided in proposed §§ 38.765, 38.775, 38.780, and 38.785 and as specified in the Terms and Conditions of the grant agreement. Under proposed § 38.765, within 60 days after the last day of the grant period, grantees would have to submit a final report to VA that meets the requirements set forth in the NOFA.

Additionally, under proposed § 38.755, upon execution of the grant agreement, VA would obligate grant funds and in some cases, as provided in proposed § 38.760, would reimburse grantees for costs incurred before the effective date of the grant, to the extent such costs are authorized by VA in the NOFA or the grant agreement or authorized subsequently by VA in writing should the need arise.

VA also proposes to include withdrawal provisions in § 38.750. Applicants would be able to submit a request in writing to the VA point of contact specified in the NOFA published for that year to withdraw their application from consideration. Applicants would be required to provide a rationale for the withdrawal request. VA recognizes that the potential pool of grant applicants usually operates with limited funding and that schools, non-profit organizations, and institutions of higher learning may be subject to competing interests, especially during times of unforeseen crisis.

As proposed in § 38.770, if VA determines that recovery of funds is necessary for violations of the grant agreement or unauthorized uses of grant funds, VA would notify grantees in writing of the intent to recover grant funds. Grantees would have 30 days to submit documentation refuting the proposed recovery, which VA would review for a final determination. If VA makes a final decision that action would be taken to recover grant funds from the grantee, VA would stop further payments of grant funds under this part until the grant funds are recovered and the condition that led to the decision to recover grant funds has been resolved. We believe these measures would help safeguard Federal funds and ensure appropriate use of the VLGP grant funds awarded.

As part of VA's duty to ensure fiscal responsibility, we propose in § 38.775 to conduct site visits to grantee locations to review grantee accomplishments and management control systems. In addition, VA may conduct as needed inspections of grantee records to determine compliance with the provisions of this part. All visits and evaluations would be performed with minimal disruption to the grantee to the extent practicable. Further, as proposed in § 38.780, VA would enforce 2 CFR part 200 regulations to ensure all VLGP grant recipients comply with requirements of the Single Audit Act of 1996 and use a compliant financial management system based on OMB cost principles. As proposed in § 38.785, grantees would have to produce upon VA's request records maintained in accordance with 2 CFR 200.333.

Executive Orders 12866, 13563

Executive Orders 12866 and 13563 direct agencies to assess the costs and benefits of available regulatory alternatives and, when regulation is necessary, to select regulatory approaches that maximize net benefits (including potential economic, environmental, public health and safety effects, and other advantages; distributive impacts; and equity). Executive Order 13563 (Improving Regulation and Regulatory Review) emphasizes the importance of quantifying both costs and benefits, reducing costs, harmonizing rules, and promoting flexibility. The Office of Information and Regulatory Affairs has determined that this proposed rule is not a significant regulatory action under Executive Order 12866.

VA's impact analysis can be found as a supporting document at *http://www.regulations.gov,* usually within 48 hours after the rulemaking document is published. Additionally, a copy of the rulemaking and its Regulatory Impact Analysis are available on VA's website at *http://www.va.gov/orpm/,* by following the link for ''VA Regulations Published From FY 2004 Through Fiscal Year to Date.''

Paperwork Reduction Act

This proposed rule contains provisions constituting collections of information under the provisions of the Paperwork Reduction Act of 1995 (44 U.S.C. 3501–3521) that require approval by OMB. Accordingly, under 44 U.S.C. 3507(d), VA has submitted a copy of this rulemaking action to OMB for review.

OMB assigns control numbers to collections of information it approves. VA may not conduct or sponsor, and a

person is not required to respond to, a collection of information unless it displays a currently valid OMB control number. Proposed 38 CFR 38.730 contains collections of information under the Paperwork Reduction Act of 1995. If OMB does not approve the collections of information as requested, VA will immediately remove the provisions containing collections of information or take such other action as is directed by OMB.

Comments on the collections of information contained in this proposed rule should be submitted to the Office of Management and Budget, Attention: Desk Officer for the Department of Veterans Affairs, Office of Information and Regulatory Affairs, Washington, DC 20503. Send your comments and suggestions on this information collection by the date indicated in the **DATES** section to the Desk Officer for the Department of the Veterans Affairs at OMB–OIRA at (202) 395–5806 (fax) or *OIRA_Submission@omb.eop.gov* (email). Please indicate ''Attention: This is a new OMB Control Number request.'' Comments should indicate that they are submitted in response to ''RIN 2900–AR00.''

OMB is required to make a decision concerning the collections of information contained in this proposed rule between 30 and 60 days after publication of this document in the **Federal Register**. Therefore, a comment to OMB is best assured of having its full effect if OMB receives it within 30 days of publication. This does not affect the deadline for the public to comment on the proposed rule. Notice of OMB approval for this information collection will be published in a future **Federal Register** document.

The Department considers comments by the public on proposed collections of information in—

- Evaluating whether the proposed collections of information are necessary for the proper performance of the functions of the Department, including whether the information will have practical utility;
- Evaluating the accuracy of the Department's estimate of the burden of the proposed collections of information, including the validity of the methodology and assumptions used;
- Enhancing the quality, usefulness, and clarity of the information to be collected; and
- Minimizing the burden of the collections of information on those who are to respond, including through the use of appropriate automated, electronic, mechanical, or other technological collection techniques or other forms of information technology, *e.g.,* permitting electronic submission of responses.

The collections of information contained in 38 CFR 38.730 are described immediately following this paragraph.

Title: SF–424 Application for Federal Assistance.

- *Summary of collection of information:* The new collection of information in proposed 38 CFR 38.730 would require VLGP grant applicants to submit the SF–424 as a minimum requirement to qualify for a VLGP grant.
- *Description of the need for information and proposed use of information:* The collection of information is necessary to determine applicant eligibility for a VLGP grant. VA will use this information to score completed grant applications.
- *Description of likely respondents:* Members of the public, institutions, and non-profits that are interested in applying for VA grants.
- *Estimated number of respondents:* 20 per year.
- *Estimated frequency of responses:* Annually.
- *Estimated average burden per response:* 1 hour.
- *Estimated annual cost to respondents for the hour burdens for collections of information:* According to the U.S. Bureau of Labor Statistics Mean Hourly Earnings, the cost to each respondent is $25.72, making the total cost for respondents an estimated $514.40 (20 burden hours × $25.72 per hour). (Source: May 2019 BLS National Occupational Employment and Wage Estimates, Code: 00–0000, All Occupations: *https://www.bls.gov/oes/current/oes_nat.htm#00-0000*)
- *Estimated total annual reporting and recordkeeping burden:* There is no anticipated recordkeeping burden.
- *Estimated cost to the Federal Government:* There is no projected incremental increase in the cost burden to the Federal Government with the requirement of the SF–424, Application for Federal Assistance. NCA currently has existing personnel, systems, and processes (or other resources) in place to receive and review their grant applications. Any additional cost for agency system development, maintenance, and enhancements should not be attributed to use of SF–424, and therefore its use is not expected to alter annualized Federal costs.

Regulatory Flexibility Act

The Secretary hereby certifies that this proposed rule would not have a significant economic impact on a substantial number of small entities as they are defined in the Regulatory Flexibility Act, 5 U.S.C. 601–612. Receiving or not receiving a grant is unlikely to have a significant economic impact on small entity applicants, specifically non-profit institutions. Therefore, pursuant to 5 U.S.C. 605(b), the initial and final regulatory flexibility analysis requirements of 5 U.S.C. 603 and 604 do not apply.

Unfunded Mandates

The Unfunded Mandates Reform Act of 1995 requires, at 2 U.S.C. 1532, that agencies prepare an assessment of anticipated costs and benefits before issuing any rule that may result in the expenditure by State, local, and Tribal governments, in the aggregate, or by the private sector, of $100 million or more (adjusted annually for inflation) in any 1 year. This proposed rule would have no such effect on State, local, and Tribal governments, or on the private sector.

Catalog of Federal Domestic Assistance

The Catalog of Federal Domestic Assistance number and title for the program affected by this document is 64.204, Veterans Legacy Grant Program.

List of Subjects in 38 CFR Part 38

Administrative practice and procedure, Cemeteries, Veterans.

Signing Authority

Denis McDonough, Secretary of Veterans Affairs, approved this document on March 12, 2021 and authorized the undersigned to sign and submit the document to the Office of the Federal Register for publication electronically as an official document of the Department of Veterans Affairs.

Luvenia Potts,

Regulation Development Coordinator, Office of Regulation Policy & Management, Office of the Secretary, Department of Veterans Affairs.

For the reasons set out in the preamble, VA proposes to amend 38 CFR part 38 as follows:

PART 38—NATIONAL CEMETERIES OF THE DEPARTMENT OF VETERANS AFFAIRS

■ 1. The authority citation for part 38 is revised to read as follows:

Authority: 38 U.S.C. 107, 501, 512, 2306, 2400, 2402, 2403, 2404, 2407, 2408, 2411, 7105.

■ 2. Add an undesignated center heading, ''Veterans Legacy Grants Program,'' and §§ 38.710 through 38.785 to read as follows:

* * * * *

Veterans Legacy Grants Program

Sec.

38.710 Purpose and use of grant funds.
38.715 Definitions.
38.720 Grants—general.
38.725 Notice of Funding Availability (NOFA).
38.730 Applications.
38.735 Additional factors for deciding applications.
38.740 Scoring and selection.
38.745 Disposition of applications.
38.750 Withdrawal of grant application.
38.755 Grant agreement.
38.760 Payments under the grant.
38.765 Grantee reporting requirements.
38.770 Recovery of funds by VA.
38.775 Compliance review requirements.
38.780 Financial management.
38.785 Recordkeeping.

Veterans Legacy Grants Program

§ 38.710 Purpose and use of grant funds.

Sections 38.710 through 38.785 establish the Veterans Legacy Grants Program (VLGP). Under this program, VA may provide grants to eligible entities defined in § 38.715 to:

(a) Conduct research related to national, State, or Tribal Veterans' cemeteries;

(b) Produce educational materials that teach about the history of Veterans interred in national, State, or Tribal Veterans' cemeteries;

(c) Contribute to the extended memorialization of Veterans interred in national, State, or Tribal Veterans' cemeteries by presenting grantee research on national, State, or Tribal Veterans' cemeteries through site hosting and other digital technologies; and,

(d) Promote community engagement with the histories of Veterans interred in national, State, or Tribal Veterans' cemeteries.

(Authority: 38 U.S.C. 501(d), 2400 note)

§ 38.715 Definitions.

For purposes of this part and any Notice of Funding Availability (NOFA) issued pursuant to this part:

(a) *Applicant* means an eligible entity that submits a VLGP grant application that is announced in a NOFA.

(b) *Community engagement* means strategic interaction with identified groups of people, whether they are connected by geographic location, special interest, or affiliation, to identify and address issues related to the legacy of Veterans.

(c) *Eligible recipient (or entity)* means one of the following:

(1) An institution of higher learning;

(2) A local educational agency;

(3) A non-profit entity that the Secretary determines has a demonstrated history of community engagement that pertains to the projects described in the relevant NOFA;

(4) An educational institution; or

(5) Another recipient (or entity) the Secretary deems appropriate.

(d) *Institution of higher learning (IHL)* means a college, university, or similar institution, including a technical or business school, offering postsecondary level academic instruction that leads to an associate or higher degree if the school is empowered by the appropriate State education authority under State law to grant an associate or higher degree.

(e) *Educational institution* means any public or private elementary school, secondary school, vocational school, correspondence school, business school, junior college, teachers' college, college, normal school, professional school, university, or scientific or technical institution, or other institution furnishing education for adults.

(f) *Local educational agency (LEA)* means any public agency or authority, including a state educational agency, that has administrative control or direction over public elementary or secondary schools under 20 U.S.C. 7801(30). The term would also include any Bureau of Indian Education school, as covered in 20 U.S.C. 7801(30)(C).

(g) *State educational agency (SEA)* means the agency primarily responsible for the State supervision of public elementary schools and secondary schools.

(h) *Non-profit entity* means any organization chartered under 26 U.S.C. 501(c)(3).

(i) *Educational materials* means a framework of digital instructional materials relevant to the grade level of K–12 students involved (*e.g.,* lesson plans) that can be used for outreach and other purposes.

(j) *Grantee* means an eligible recipient that is awarded a VLGP grant under this part.

(k) *Notice of Funding Availability (NOFA)* means a Notice of Funding Availability published in the OMB-designated government-wide website in accordance with § 38.725 and 2 CFR 200.203 regulations.

(Authority: 38 U.S.C. 501(d), 2400 note and 2 CFR 200.203)

§ 38.720 Grants—general.

(a) *Grants.* VA may award VLGP grants to eligible recipients selected under § 38.730 of this part.

(b) *Maximum amounts.* The maximum grant amount to be awarded to each grantee and the total maximum amount for all grants will be specified in the annually published NOFA.

(c) *Number of grants awarded.* The number of grants VA will award will depend on the total amount of grant funding available at VA's discretion and the funding amount awarded to each grantee, which is based on each grantee's proposal.

(d) *Grant is not a course buyout.* The grant funds shall not be used to substitute a class that an instructor is required to teach during an academic year.

(e) *Matching requirement.* VA will determine whether a grantee must provide matching funds as a condition of receiving a VLGP grant as set forth in the NOFA.

(f) *Grant is not Veterans' benefit.* The VLGP grant is not a Veterans' benefit. VA decisions on VLGP applications are final and not subject to the same appeal rights as Veterans' benefits decisions.

(Authority: 38 U.S.C. 501(d), 2400 note)

§ 38.725 Notice of Funding Availability (NOFA).

When funds are available for VLGP grants, VA will publish a NOFA in the **Federal Register** and in *Grants.gov* (*http://www.grants.gov*). The NOFA will identify:

(a) The location for obtaining VLGP grant applications, including the specific forms that will be required;

(b) The date, time, and place for submitting completed VLGP grant applications;

(c) The estimated total amount of funds available and the maximum funds available to a single grantee;

(d) The minimum number of total points and points per category that an applicant must receive to be considered for a grant and information regarding the scoring process;

(e) Any timeframes and manner for payments under the VLGP grant;

(f) A description of eligible entities or other eligibility requirements necessary to receive the grant; and

(g) Other information necessary for the VLGP grant application process, as determined by VA, including contact information for the office that will oversee the VLGP within VA.

(Authority: 38 U.S.C. 501(d), 2400 note and 2 CFR 200.203)

§ 38.730 Applications.

To apply for a grant, an eligible entity must submit to VA a complete application package, as described in the NOFA. Applications will be accepted only through *Grants.gov* (*http://www.grants.gov*). A complete grant application, as further described in the NOFA, includes standard forms specified in the NOFA and the following:

(a) *Project Description.* Each project must serve a minimum of one VA national cemetery, State Veterans'

cemetery, or Tribal Veterans' cemetery. The applicant must provide a narrative project description that demonstrates the best approach for attaining required results as set forth in the NOFA;

(b) *Project Team.* If applicable, the applicant must provide a narrative description of anticipated project team and any work partner(s), including the responsibilities of the principal investigator, the co-principal investigators, and any extramural partner entity;

(c) *Project plan.* The applicant must include a detailed timeline for the tasks outlined in the project description and proposed milestones;

(d) *Expertise and capacity.* The applicant must provide a description of the applicant's ability and capacity to administer the project. This may include evidence of past experience with projects similar in scope as defined by the NOFA, to include descriptions of the engagement model, examples of successful leadership and management of a project of similar scale and budget (or greater), or related work in this field;

(e) *Match.* If specified as a requirement in the NOFA, the applicant must provide evidence of secured cash matching (1:1) funds or of its ability to secure commitments to receive such funds;

(f) *Proposed Budget.* The applicant's proposed budget should identify all costs and proposed expenditures, to include additional compensation and honoraria (and to whom); equipment costs; production costs; and travel costs. The applicant must provide a budget that specifies costs and payments, as well as indirect and other relevant costs. The budget will be submitted in a format specified in the NOFA; and

(g) *Additional information.* Any additional information as deemed appropriate by VA and set forth in the NOFA.

(Authority: 38 U.S.C. 501(d), 2400 note and 2 CFR 200.203)

§ 38.735 Additional factors for deciding applications.

(a) *Applicant's performance on prior award.* VA may consider the applicant's noncompliance with requirements applicable to prior VA or other Federal agency awards as reflected in past written evaluation reports and memoranda on performance and the completeness of required prior submissions.

(b) *Applicant's fiscal integrity.* Applicants must meet and maintain standards of fiscal integrity for participation in Federal grant programs as reflected in 2 CFR 200.205.

(Authority: 38 U.S.C. 501(d), 2400 note and 2 CFR 200.203)

§ 38.740 Scoring and selection.

(a) *Scoring.* VA will only score complete applications received from eligible applicants by the deadline established in the NOFA. The applications must meet the minimum criteria set forth in § 38.730 and will be scored as specified in the NOFA, as set forth in § 38.725.

(b) *Selection of recipients.* All complete applications will be scored using the criteria in paragraph (a) of this section and ranked in order of highest to lowest total score. NOFA announcements may also clarify the selection criteria in paragraph (a). The relative weight (point value) for each selection will be specified in the NOFA. VA will award any VLGP grant on the primary basis of the scores but will also consider a risk assessment evaluation.

(Authority: 38 U.S.C. 501(d), 2400 note and 2 CFR 200.203)

§ 38.745 Disposition of applications.

(a) *Disposition of applications.* Upon review of an application and dependent on availability of funds, VA will:

(1) Approve the application for funding, in whole or in part, for such amount of funds, and subject to such conditions that VA deems necessary or desirable;

(2) Determine that the application is of acceptable quality for funding, in that it meets minimum criteria, but disapprove the application for funding because it does not rank sufficiently high in relation to other applications to qualify for an award based on the level of funding available, or for another reason as provided in the decision document; or

(3) Defer action on the application for such reasons as lack of funds or a need for further review.

(b) *Notification of disposition.* VA will notify the applicant in writing of the disposition of the application. A signed grant agreement form, as defined in § 38.755, will be issued to the applicant of an approved application.

(Authority: 38 U.S.C. 501(d), 2400 note and 2 CFR 200.203)

§ 38.750 Withdrawal of grant application.

Applicants may withdraw a VLGP application submitted through *Grants.gov* by writing the specified VA point of contact and including rationale for the withdrawal request within a certain number of days as determined in the NOFA.

(Authority: 38 U.S.C. 501(d), 2400 note and 2 CFR 200.203)

§ 38.755 Grant agreement.

After a grant is approved for award, VA will draft a grant agreement to be executed by VA and the grantee. Upon execution of the grant agreement, VA will obligate the grant amount. The grant agreement will provide that the recipient agrees, and will ensure that each subrecipient (if applicable) agrees, to:

(a) Operate the program in accordance with the provisions of §§ 38.710 through 38.785, 2 CFR part 200, and the applicant's VLGP application;

(b) Comply with such other terms and conditions, including recordkeeping and reports for program monitoring and evaluation purposes, as VA may establish in the Terms and Conditions of the grant agreement for purposes of carrying out the VLGP project in an effective and efficient manner; and

(c) Provide additional information that VA requests with respect to:

(1) Program effectiveness, as defined in the Terms and Conditions of the grant agreement;

(2) Compliance with the Terms and Conditions of the grant agreement; and

(3) Criteria for evaluation, as defined in the Terms and Conditions of the grant agreement.

(Authority: 38 U.S.C. 501(d), 2400 note and 2 CFR 200.203)

§ 38.760 Payments under the grant.

(a) Grantees are to be paid in accordance with the timeframes and manner set forth in the NOFA.

(b) *Availability of grant funds.* Federal financial assistance will become available subsequent to the effective date of the grant as set forth in the grant agreement. Recipients may be reimbursed for costs resulting from obligations incurred before the effective date of the grant, if such costs are authorized by VA in the NOFA or the grant agreement or authorized subsequently by VA in writing, and otherwise would be allowable as costs of the grant under applicable guidelines, regulations, and terms and conditions of the grant agreement.

(Authority: 38 U.S.C. 501(d), 2400 note and 2 CFR 200.203)

§ 38.765 Grantee reporting requirements.

(a) *Final report.* All grantees must submit to VA, not later than 60 days after the last day of grant period for which a grant is provided under this part, a final report that meets the requirement set forth in the NOFA.

(b) *Additional reporting.* Additional reporting requirements may be requested by VA to allow VA to assess program effectiveness.

(Authority: 38 U.S.C. 501(d), 2400 note and 2 CFR 200.203)

§ 38.770 Recovery of funds by VA.

(a) *Recovery of funds.* VA may recover from the grantee any funds that are not used in accordance with a grant agreement. If VA decides to recover such funds, VA will issue to the grantee a notice of intent to recover grant funds, and the grantee will then have 30 days to return the grant funds or submit documentation demonstrating why the grant funds should not be returned. After review of all submitted documentation, VA will determine whether action will be taken to recover the grant funds.

(b) *Prohibition of additional VLGP payments.* When VA makes a final decision to recover grant funds from the grantee, VA must stop further payments of grant funds under this part until the grant funds are recovered and the condition that led to the decision to recover grant funds has been resolved.

(Authority: 38 U.S.C. 501(d), 2400 note and 2 CFR 200.203)

§ 38.775 Compliance review requirements.

(a) *Site visits.* VA may conduct, as needed, site visits to grantee locations to review grantee accomplishments and management control systems.

(b) *Inspections.* VA may conduct, as needed, inspections of grantee records to determine compliance with the provisions of this part. All visits and evaluations will be performed with minimal disruption to the grantee to the extent practicable.

(Authority: 38 U.S.C. 501(d), 2400 note and 2 CFR 200.203)

§ 38.780 Financial management.

(a) *Compliance.* All recipients will comply with applicable requirements of the Single Audit Act Amendments of 1996, as implemented by 2 CFR part 200.

(b) *Financial Management.* All grantees must use a financial management system that complies with 2 CFR part 200. Grantees must meet the applicable requirements of the Office of Management and Budget's regulations on Cost Principles at 2 CFR 200.400–200.475.

(Authority: 38 U.S.C. 501(d), 2400 note and 2 CFR 200.400–200.475)

§ 38.785 Recordkeeping.

Grantees must ensure that records are maintained in accordance with 2 CFR 200.333. Grantees must produce such records at VA's request.

(Authority: 38 U.S.C. 501(d), 2400 note and 2 CFR 200.333)

[FR Doc. 2021–05721 Filed 3–25–21; 8:45 am]

BILLING CODE 8320–01–P

ENVIRONMENTAL PROTECTION AGENCY

40 CFR Part 52

[EPA–R06–OAR–2021–0177; FRL–10021–16–Region 6]

Air Plan Approval; Texas; Clean Air Act Requirements for Emissions Inventories for Nonattainment Areas for the 2015 Ozone National Ambient Air Quality Standards

AGENCY: Environmental Protection Agency (EPA).

ACTION: Proposed rule.

SUMMARY: The Environmental Protection Agency (EPA) is proposing to approve the portions of the State Implementation Plan (SIP) submitted by the State of Texas to meet the Emissions Inventory (EI) requirements of the Federal Clean Air Act (CAA or the Act), for the Dallas-Fort Worth (DFW), Houston-Galveston-Brazoria (HGB), and Bexar County ozone nonattainment areas for the 2015 8-hour ozone national ambient air quality standards (NAAQS). EPA is proposing to approve this action pursuant to section 110 and part D of the CAA and EPA's regulations.

DATES: Written comments must be received on or before April 26, 2021.

ADDRESSES: Submit your comments, identified by Docket No. EPA–R06–OAR–2021–0177, at *https://www.regulations.gov.* Follow the online instructions for submitting comments. Once submitted, comments cannot be edited or removed from *Regulations.gov.* The EPA may publish any comment received to its public docket. Do not submit electronically any information you consider to be Confidential Business Information (CBI) or other information whose disclosure is restricted by statute. Multimedia submissions (audio, video, etc.) must be accompanied by a written comment. The written comment is considered the official comment and should include discussion of all points you wish to make. The EPA will generally not consider comments or comment contents located outside of the primary submission (*i.e.,* on the web, cloud, or other file sharing system). For additional submission methods, please contact the person identified in the **FOR FURTHER INFORMATION CONTACT** section. For the full EPA public comment policy, information about CBI or multimedia submissions, and general guidance on making effective comments, please visit *https://www.epa.gov/dockets/commenting-epa-dockets.*

Docket: The index to the docket for this action is available electronically at *www.regulations.gov.* While all documents in the docket are listed in the index, some information may not be publicly available due to docket file size restrictions or content (*e.g.,* CBI).

FOR FURTHER INFORMATION CONTACT: Ms. Nevine Salem, EPA Region 6 Office, Infrastructure and Ozone Section, 214–665–7222, *salem.nevine@epa.gov.* Out of an abundance of caution for members of the public and our staff, the EPA Region 6 office will be closed to the public to reduce the risk of transmitting COVID–19. We encourage the public to submit comments via *https://www.regulations.gov,* as there will be a delay in processing mail and no courier or hand deliveries will be accepted. Please call or email the contact listed above if you need alternative access to material indexed but not provided in the docket.

SUPPLEMENTARY INFORMATION: Throughout this document wherever ''we,'' ''us,'' or ''our'' is used, we mean the EPA.

I. Background

Ozone is a gas that is formed by the reaction of Volatile Organic Compounds (VOC) and Oxides of Nitrogen (NO_X) in the atmosphere in the presence of sunlight. Therefore, an emission inventory for ozone focuses on the emissions of VOC and NO_X referred to as ozone precursors. These precursors (VOC and NO_X) are emitted by many types of pollution sources, including point sources such as power plants and industrial emissions sources; on-road and off-road mobile sources (motor vehicles and engines); and smaller residential and commercial sources, such as dry cleaners, auto body shops, and household paints, collectively referred to as nonpoint sources (also called area sources).

1. The 2015 Ozone NAAQS

On October 1, 2015 the EPA revised both the primary and secondary NAAQS [1] for ozone from concentration

[1] The primary ozone standards provide protection for children, older adults, and people with asthma or other lung diseases, and other at-risk populations against an array of adverse health effects that include reduced lung function, increased respiratory symptoms and pulmonary inflammation; effects that contribute to emergency department visits or hospital admissions; and mortality. The secondary ozone standards protect

Continued

level of 0.075 part per million (ppm) to 0.070 ppm to provide increased protection of public health and the environment (80 FR 65296, October 26, 2015). The 2015 8-hour ozone NAAQS retains the same general form and averaging time as the 0.075 ppm NAAQS set in 2008 (2008 8-hour NAAQS) but is set at a more protective level. Specifically, the 2015 8-hour ozone NAAQS is attained when the 3-year average of the annual fourth-highest daily maximum 8-hour ambient air quality ozone concentrations is less than or equal to 0.07 ppm [2].

On March 9, 2018 (83 FR 10376), the EPA published the Classifications Rule that establishes how the statutory classifications apply for the 2015 8-hr ozone NAAQS, including the air quality thresholds for each classification category and attainment deadline associated with each classification.

On June 18, 2018, the EPA classified the DFW and HGB areas as marginal nonattainment areas for 2015 ozone NAAQS with an attainment deadline of August 3, 2021. (*See* 83 FR 25776). The DFW area consists of Collin, Dallas, Denton, Ellis, Johnson, Kaufman, Parker, Tarrant and Wise counties. The HGB area consists of Brazoria, Chambers, Fort Bend, Galveston, Harris, and Montgomery counties. On July 25, 2018, Bexar county was designated as marginal nonattainment area for the 2015 ozone standard with an attainment deadline of September 24, 2021 (*See* 83 FR 35136).

2. Statutory and Regulatory Emission Inventory Requirements

An emission inventory of ozone is an estimation of actual emissions of air pollutants that contribute to the formation of ozone in an area. The emissions inventory provides emissions data for a variety of air quality planning tasks, including establishing baseline emission levels for calculating emission reduction targets needed to attain the NAAQS, determining emission inputs for ozone air quality modeling analyses, and tracking emissions over time to determine progress toward meeting Reasonable Further Progress (RFP) requirements.

CAA section 182(a)(1) and 40 CFR 51.1315(b) require states to submit a ''base year inventory'' for each ozone nonattainment area within two years of the effective date of designation. This inventory must be ''a comprehensive, accurate, current inventory of actual emissions from sources of VOC and NO_X emitted within the boundaries of the nonattainment area as required by CAA section 182(a)(1)'' (40 CFR 51.1300(p), see also CAA section 172(c)(3)). In addition, 40 CFR 51.1310(b) requires that the inventory year be selected consistent with the baseline year for the RFP plan, which is usually the most recent calendar year for which a complete triennial emissions inventory is required to be submitted to the EPA under the Air Emissions Reporting Requirements (AAER) (40 CFR part 51, subpart A).

3. State's Submittal

On June 10, 2020, Texas adopted a SIP revision addressing the 2015 ozone NAAQS emissions inventory requirements for the DFW, HGB and Bexar County nonattainment areas, and submitted it to EPA on June 24, 2020.[3] Texas has developed a 2017 base year emissions inventory for the DFW, HGB, and Bexar county nonattainment areas. The 2017 base year emissions include all point, nonpoint (area), non-road mobile, and on-road mobile source emissions. Tables 1, 2, and 3 summarize the 2017 NO_X and VOC emissions for these nonattainment areas for a typical ozone season day emission [4] (reflective of the summer period, when the highest ozone concentrations are expected in these ozone nonattainment areas).

TABLE 1—DFW 2017 EMISSIONS INVENTORY

[Tons per day]

Source type	NO_X	VOC
Point	29.90	21.04
Nonpoint (Area)	41.82	293.62
On-road Mobile	74.79	31.74
Non-road Mobile	125.13	60.56
Total	271.64	406.96

TABLE 2—HGB 2017 EMISSIONS INVENTORY

[Tons per day]

Source type	NO_X	VOC
Point	97.31	73.34
Nonpoint (Area)	32.12	287.74
On-road Mobile	86.34	32.29
Non-road Mobile	101.49	58.65
Total	317.26	452.02

TABLE 3—BEXAR COUNTY 2017 EMISSIONS INVENTORY

[Tons per day]

Source type	NO_X	VOC
Point	29.88	3.56
Nonpoint (Area)	6.62	74.61
On-road Mobile	11.42	7.09
Non-road Mobile	35.70	20.84
Total	83.62	106.10

II. EPA's Evaluation

EPA has reviewed the Texas SIP revision for consistency with the CAA and regulatory emission inventory requirements. In particular, EPA has reviewed the techniques used by state of Texas to derive and quality assure the emission estimates. EPA has also evaluated whether Texas provided the public with the opportunity to review and comment on the development of the emission estimates and whether Texas addressed the public comments received. A summary of EPA's analysis is provided below. For a full discussion for our evaluation, please see our Technical Support Document (TSD) included in the docket to this action.

Texas documented the general procedures used to estimate the emissions for each of the four major source types as referenced above. The documentation of the emission estimation procedures was adequate for us to determine that Texas followed acceptable procedures to estimate the emissions.

Texas developed a quality assurance plan and followed this plan during various phases of the emissions estimation and documentation process to quality assure the emissions for completeness and accuracy. These quality assurance procedures are summarized in the documentation describing how the emissions totals were developed. We propose to find that the quality assurance procedures followed by Texas are adequate and acceptable and that Texas has developed inventories of VOC and NO_X emissions that are comprehensive and complete.

Texas notified the public of the opportunity for comment and offered three public hearings. A full record of public notices, written and oral comments received during the state's public comment period, as well as states' responses to those comments are included in the state's submittal. A copy of the Texas SIP revision submittal is available online at *www.regulations.gov,* Docket number EPA–R06–OAR–2021–0177.

against adverse effects to the public welfare, including those related to impacts on sensitive vegetation and forested ecosystems.

[2] For a detailed explanation of the calculation of the 3-year 8-hour average, see 80 FR 65296 and 40 CFR part 50, Appendix U.

[3] A copy of the SIP revision is available online at *www.regulations.gov,* Docket number EPA–R06–OAR–2021–0177.

[4] *See* Ozone season day emission as defined in 40 CFR 51.1300(q).

III. Proposed Action

We are proposing to approve the portion of the Texas SIP revision submitted on June 24, 2020 to address the emissions inventory requirements for the DFW, HGB, and Bexar counties for the 2015 ozone NAAQS. The inventories we are proposing to approve are listed in Tables 1, 2, and 3 above. We are proposing to approve the emissions inventories because they contain comprehensive, accurate and current inventories of actual emissions for all relevant sources in accordance with CAA sections 172(c)(3) and 182(a)(1) requirements and because Texas adopted the emission inventories consistent with reasonable public notice and opportunity for a public hearing requirements. A TSD was prepared which details our evaluation. Our TSD may be accessed online at *www.regulations.gov,* Docket No. EPA–R06–OAR–2021–0177.

IV. Statutory and Executive Order Reviews

Under the CAA, the Administrator is required to approve a SIP submission that complies with the provisions of the Act and applicable Federal regulations. 42 U.S.C. 7410(k); 40 CFR 52.02(a). Thus, in reviewing SIP submissions, the EPA's role is to approve state choices, provided that they meet the criteria of the CAA. Accordingly, this action merely proposes to approve state law as meeting Federal requirements and does not impose additional requirements beyond those imposed by state law. For that reason, this action:

- Is not a ''significant regulatory action'' subject to review by the Office of Management and Budget under Executive Orders 12866 (58 FR 51735, October 4, 1993) and 13563 (76 FR 3821, January 21, 2011);
- Does not impose an information collection burden under the provisions of the Paperwork Reduction Act (44 U.S.C. 3501 *et seq.*);
- Is certified as not having a significant economic impact on a substantial number of small entities under the Regulatory Flexibility Act (5 U.S.C. 601 *et seq.*);
- Does not contain any unfunded mandate or significantly or uniquely affect small governments, as described in the Unfunded Mandates Reform Act of 1995 (Pub. L. 104–4);
- Does not have federalism implications as specified in Executive Order 13132 (64 FR 43255, August 10, 1999);
- Is not an economically significant regulatory action based on health or safety risks subject to Executive Order 13045 (62 FR 19885, April 23, 1997);
- Is not a significant regulatory action subject to Executive Order 13211 (66 FR 28355, May 22, 2001);
- Is not subject to requirements of section 12(d) of the National Technology Transfer and Advancement Act of 1995 (15 U.S.C. 272 note) because application of those requirements would be inconsistent with the CAA; and
- Does not provide EPA with the discretionary authority to address, as appropriate, disproportionate human health or environmental effects, using practicable and legally permissible methods, under Executive Order 12898 (59 FR 7629, February 16, 1994).

In addition, the SIP is not approved to apply on any Indian reservation land or in any other area where EPA or an Indian tribe has demonstrated that a tribe has jurisdiction. In those areas of Indian country, the proposed rule does not have tribal implications and will not impose substantial direct costs on tribal governments or preempt tribal law as specified by Executive Order 13175 (65 FR 67249, November 9, 2000).

List of Subjects in 40 CFR Part 52

Environmental protection, Air pollution control, Incorporation by reference, Nitrogen dioxide, Ozone, Reporting and record keeping requirements, Volatile organic compounds.

Authority: 42 U.S.C. 7401 *et seq.*

Dated: March 22, 2021.

David Gray,

Acting Regional Administrator, Region 6.

[FR Doc. 2021–06300 Filed 3–25–21; 8:45 am]

BILLING CODE 6560–50–P

ENVIRONMENTAL PROTECTION AGENCY

40 CFR Part 62

[EPA–R08–OAR–2021–0187; FRL–10021–36–Region 8]

Approval and Promulgation of State Plans for Designated Facilities and Pollutants; North Dakota; Control of Emissions From Existing Municipal Solid Waste Landfills; Control of Emissions From Existing Commercial and Industrial Solid Waste Incineration Units; Negative Declaration of Existing Hospital/Medical/Infectious Waste Incineration Units

AGENCY: Environmental Protection Agency (EPA).

ACTION: Proposed rule.

SUMMARY: Pursuant to the Federal Clean Air Act (CAA or the ''Act''), the Environmental Protection Agency (EPA or the ''Agency'') is proposing approval of a CAA section 111(d) plan submitted by the North Dakota Department of Environmental Quality (NDDEQ or the ''Department'') on July 28, 2020 to regulate landfill gas and its components from existing municipal solid waste (MSW) landfills. The EPA is also proposing approval of a CAA section 111(d)/129 plan submitted by the Department on the same date to regulate air pollutants from existing commercial and industrial solid waste incineration (CISWI) units and air curtain incinerators (ACI). These plans provide for the State's implementation and enforcement of the federal emission guidelines (EG) for existing MSW landfills, CISWI units and ACI in North Dakota. The EPA with this proposed rule is also notifying the public that the Agency has received a request from the State of North Dakota, dated May 8, 2019, for withdrawal of a previously approved CAA section 111(d)/129 plan for hospital/medical/infectious waste incineration (HMIWI) units and for Agency approval of a negative declaration of such units within the State. Approval of this negative declaration will stand in lieu of a North Dakota CAA section 111(d)/129 plan for HMIWI units.

DATES: Written comments must be received on or before April 26, 2021.

ADDRESSES: Submit your comments, identified by Docket ID No. EPA–R08–OAR–2021–0187, to the Federal Rulemaking Portal: *https://www.regulations.gov.* Follow the online instructions for submitting comments. Once submitted, comments cannot be edited or removed from *www.regulations.gov.* The EPA may publish any comment received to its public docket. Do not submit electronically any information you consider to be Confidential Business Information (CBI) or other information whose disclosure is restricted by statute. Multimedia submissions (audio, video, etc.) must be accompanied by a written comment. The written comment is considered the official comment and should include discussion of all points you wish to make. The EPA will generally not consider comments or comment contents located outside of the primary submission (*i.e.,* on the web, cloud, or other file sharing system). For additional submission methods, the full EPA public comment policy, information about CBI or multimedia submissions, and general guidance on making effective comments, please visit *http://www2.epa.gov/dockets/commenting-epa-dockets.*

Docket: All documents in the docket are listed in the *www.regulations.gov* index. Although listed in the index, some information is not publicly available, *e.g.,* CBI or other information whose disclosure is restricted by statute. Certain other material, such as copyrighted material, will be publicly available only in hard copy. Publicly available docket materials are available electronically at *www.regulations.gov.* To reduce the risk of COVID–19 transmission, for this proposed action we do not plan to offer hard copy review of the docket. Please email or call the person listed in the **FOR FURTHER INFORMATION CONTACT** section if you need to make alternative arrangements for access to the docket.

FOR FURTHER INFORMATION CONTACT: Gregory Lohrke, Air and Radiation Division, EPA, Region 8, Mailcode 8P–ARD, 1595 Wynkoop Street, Denver, Colorado 80202–1129, (303) 312–6396, *lohrke.gregory@epa.gov.*

SUPPLEMENTARY INFORMATION: Throughout this document ''we,'' ''us'' and ''our'' means the EPA.

Table of Contents

I. Background
A. MSW Landfill 111(d) State Plan
B. CISWI 111(d)/129 State Plan
C. HMIWI Negative Declaration of Sources
II. EPA's Submittal Analysis
A. MSW Landfill State Plan
B. CISWI State Plan
C. HMIWI Negative Declaration
III. Proposed Action
IV. Incorporation by Reference
V. Statutory and Executive Order Review

I. Background

A. MSW Landfill 111(d) State Plan

CAA section 111(d) requires the EPA Administrator to establish a procedure under which each state shall submit to the Agency a plan that establishes standards of performance for any 'existing' source for any air pollutant for which air quality criteria have not been issued or which is not included on a list published under CAA section 108 or emitted from a source category regulated under section 112 of the Act, but to which a standard of performance under section 111 would apply if such existing source were considered a 'new' source. The EPA established such a procedure by promulgating general guidelines for the adoption and submittal of state plans for existing affected facilities in 40 CFR part 60, subpart B. The EPA publishes specific state plan requirements for designated source categories in 40 CFR part 60. State plan requirements for such source categories are known as emission guidelines and compliance times for designated facilities (EG or the ''emission guidelines''). These EGs are promulgated following, or concurrent with, the publication of new source performance standards (NSPS) for the affected source category. Each EG requires each state with designated facilities in its jurisdiction to develop and submit to the EPA an approvable state plan that implements and enforces the performance standards and compliance times found within the particular EG.

On August 29, 2016, the EPA finalized revised NSPS for new MSW landfills and revised EG for existing MSW landfills in 40 CFR part 60, subparts XXX and Cf, respectively. See 81 FR 59332 (Aug. 29, 2016) and 81 FR 59313 (Aug. 29, 2016). In this set of actions an MSW landfill for which construction, reconstruction or modification was commenced on or before July 17, 2014 is considered an existing facility and subject to either a future 111(d) state plan adhering to the requirements of 40 CFR part 60, subpart Cf or a future federal plan for designated MSW landfills promulgated in 40 CFR part 62. The 2016 MSW landfills EG updates the control requirements and monitoring, reporting and recordkeeping provisions for existing MSW landfill sources. MSW landfills which commenced construction, reconstruction or modification after July 17, 2014 are considered new affected facilities subject to the NSPS in 40 CFR part 60, subpart XXX.

North Dakota submitted a 111(d) State plan for existing MSW landfills (the ''MSW landfill plan'') on July 28, 2020. The MSW landfill plan was submitted to fulfill requirements of 40 CFR part 60, subparts B and Cf. The EPA must now propose approval or disapproval of the State's submittal with reference to the general provisions for plan approval in 40 CFR part 60, subpart B and the requirements specific to plans for existing MSW landfills found in 40 CFR part 60, subpart Cf.

Approval of North Dakota's MSW landfill plan submitted in 2020 would replace the currently approved plan for landfill gas emissions from existing MSW landfills, found at 40 CFR 62.8600–8602. That State plan was submitted to EPA in 1997 to comply with the old State plan requirements of the EG for existing MSW landfills in 40 CFR part 60, subpart Cc, finalized by EPA on March 12, 1996 (61 FR 9919). All existing North Dakota MSW landfills subject to the old EG are now designated facilities as defined by 40 CFR part 60, subpart Cf and will be subject to the new MSW landfill plan if approved.

B. CISWI 111(d)/129 State Plan

CAA section 129 requires the EPA Administrator to establish performance standards and other requirements pursuant to section 111 of the Act for each source category of solid waste incineration units enumerated under that section of the Act. CAA section 111(a)(1)(D) establishes CISWI units as a source category subject to NSPS and EG development requirements, as outlined in the CAA section 111(d) description in section I.A of this document.

On March 21, 2011, the EPA finalized regular review and revisions to the NSPS and EG for new and existing CISWI units in 40 CFR part 60, subparts CCCC and DDDD, respectively (76 FR 15704). The most recent amendments of these subparts were finalized on April 16, 2019 (84 FR 15846). The EG at 40 CFR part 60, subpart DDDD required submittal of a CAA section 111(d)/129 state plan by August 7, 2013 from any state with operational existing CISWI or ACI units as they are defined by the subpart.

North Dakota's most recent approved CAA section 111(d)/129 State plan for CISWI and ACI units was approved on April 25, 2018 (83 FR 17923). North Dakota completed a transfer of implementing and enforcement authorities to a new State department of environmental quality since that approval. Revisions to State administrative code, creation of the NDDEQ and transfer of implementing and enforcing authorities to the Department necessitated a new approval of the State's CISWI plan. North Dakota submitted a new 111(d)/129 plan for existing CISWI units (the ''CISWI plan'') on July 28, 2020. The EPA must now propose approval or disapproval of the State's submittal with reference to the general provisions for plan approval in 40 CFR part 60, subpart B and the requirements specific to plans for existing CISWI units found in 40 CFR part 60, subpart DDDD.

C. HMIWI Negative Declaration of Sources

CAA section 129 authorizes the EPA to require states to submit a plan for the control of air pollutants from existing solid waste incineration units enumerated by that section according to emission guidelines and compliance times promulgated in 40 CFR part 60 by the EPA under the authority of CAA section 111(d). CAA section 129(a)(1)(C) requires the EPA's promulgation of an EG for HMIWI units and a state's submittal of a control plan for such units. The EG for existing HMIWI units may be found at 40 CFR part 60, subpart

Ce. However, 40 CFR 60.23(b) says that, ''if no designated facility is located within a State, the State shall submit a letter of certification to that effect to the Administrator [. . .]. Such certification shall exempt the State from the requirements of [the general provisions for adoption and submittal of state plans].''

North Dakota submitted a letter making a negative declaration of existing HMIWI units within the State (the ''negative declaration'') on May 8, 2019. The letter requests withdrawal of the State's previously approved CAA section 111(d)/129 HMIWI plan (40 CFR 62.8610) and approval of the negative declaration in lieu of a state plan. The EPA must now propose approval or disapproval of the State's negative declaration with reference to the general provisions for plan submittal in 40 CFR part 60, subpart B and the general provisions for plan approval in 40 CFR part 62, subpart A.

II. EPA's Submittal Analysis

A. MSW Landfill State Plan

The EPA has reviewed the North Dakota 111(d) MSW Landfill State plan submittal in the context of the plan completeness and approvability requirements found in 40 CFR part 60, subparts B and Cf. The EPA is proposing with this action to determine that the submitted section 111(d) plan meets the above cited requirements. The North Dakota plan submittal package includes all materials necessary to be deemed administratively and technically complete according to the criteria of the general provisions for adoption and submittal of state plans found in 40 CFR part 60, subpart B. North Dakota has chosen to author a State plan document and provide all implementation and enforcement authority for all State plan requirements through revisions to the North Dakota Administrative Code (NDAC) and existing portions of the North Dakota Century Code (NDCC). Specifically, the State has appropriately incorporated all EG performance standards and other source requirements in NDAC section 33.1–15–12–02, subpart Cf. Legal authority to implement and enforce the incorporated source requirements and State plan document is found in NDCC chapter 23.1–06. The State plan document, the relevant NDAC and NDCC sections, and all other relevant plan submittal materials may be found in the docket for today's action. A complete analysis of the State's legal authority to implement and enforce the plan and source requirements, the submittal's completeness and the approvability of the State plan document and incorporation of source requirements can be found in the technical support document (TSD) for this action. The TSD is available for review and may be found in the docket associated with this proposed rule. In this action, EPA is also proposing to incorporate by reference (IBR) Title 33.1, Article 15, Chapter 12, section 2, subparts A and Cf of the NDAC, effective as amended on July 1, 2020. This NDAC chapter includes the relevant source requirements specific to existing MSW landfills.

B. CISWI State Plan

The EPA has reviewed the North Dakota 111(d) CISWI State plan submittal in the context of the plan completeness and approvability requirements found in 40 CFR part 60, subparts B and DDDD. The EPA is proposing with this action to determine that the submitted section 111(d) plan meets the above cited requirements. The North Dakota plan submittal package includes all materials necessary to be deemed administratively and technically complete according to the criteria of the general provisions for adoption and submittal of state plans found in 40 CFR part 60, subpart B. North Dakota has chosen to author a State plan document and provide all implementation and enforcement authority for all State plan requirements through revisions to the NDAC and existing portions of the NDCC. Specifically, the State has appropriately incorporated all EG performance standards and other source requirements in NDAC section 33.1–15–12–02, subpart DDDD. Legal authority to implement and enforce the incorporated source requirements and State plan document is found in NDCC chapter 23.1–06. The State plan document, the relevant NDAC and NDCC sections, and all other relevant plan submittal materials may be found in the docket for today's action. A complete analysis of the State's legal authority to implement and enforce the plan and source requirements, the submittal's completeness and the approvability of the State plan document and incorporation of source requirements can be found in the TSD for this action. The TSD is available for review and may be found in the docket associated with this proposed rule. In this action, EPA is also proposing to incorporate by reference (IBR) Title 33.1, Article 15, Chapter 12, section 2, subparts A and DDDD of the NDAC, effective as amended on July 1, 2020. This NDAC chapter includes the relevant source requirements specific to existing CISWI.

C. HMIWI Negative Declaration

The EPA has reviewed the North Dakota negative declaration of existing HMIWI units in the context of general submittal approvability provisions found in 40 CFR part 60, subpart B and part 62, subpart A. The EPA is proposing with this action to determine that the State's negative declaration is approvable as it meets all negative declaration requirements as set forth in the previously mentioned general provisions. Analysis of the State's declaration can be found in the TSD for this action. The TSD is available for review and may be found in the docket associated with this proposed rule.

III. Proposed Action

The EPA is proposing to approve the North Dakota section 111(d) State plan for existing MSW landfills pursuant to 40 CFR part 60, subparts B and Cf. We are also proposing to approve North Dakota's section 111(d)/129 State plan for existing CISWI units pursuant to 40 CFR part 60, subparts B and DDDD. Finally, the EPA is also proposing to approve the State's negative declaration of existing HMIWI units and to publish this declaration in lieu of a state plan submitted pursuant to 40 CFR part 60, subpart Ce. Therefore, the EPA is proposing to amend 40 CFR part 62, subpart JJ to reflect these approval actions. These approvals are based on the rationale provided in section II of this preamble and discussed in detail in the TSD associated with this rulemaking action. The scope of the proposed approval is limited to the provisions of 40 CFR parts 60 and 62. The EPA's proposed approval of the North Dakota MSW landfill plan is limited to those landfills that meet the criteria established in 40 CFR part 60, subpart Cf. Our proposed approval of the North Dakota CISWI plan is limited to those incinerator units that meet the criteria established in 40 CFR part 60, subpart DDDD.

The EPA Administrator continues to retain authority for approval of alternative methods to determine the nonmethane organic compound concentration or a site-specific methane generation rate constant at existing MSW landfills, as stipulated in 40 CFR 60.30f(c). With respect to existing CISWI and ACI units, the Administrator also continues to retain the several authorities listed under 40 CFR 60.2542.

IV. Incorporation by Reference

In this document, the EPA is proposing to incorporate by reference NDDEQ rules regarding existing MSW landfills and CISWI units discussed in

section II of this preamble (NDAC section 33.1–15–12–02, subparts A, Cf and DDDD) in accordance with the requirements of 1 CFR 51.5. The EPA has made, and will continue to make, these materials available through the docket for this action, EPA–R08–OAR–2021–0187, at *https://www.regulations.gov* and at the EPA Region VIII Office (please contact the person identified in the **FOR FURTHER INFORMATION CONTACT** section of this preamble for more information).

V. Statutory and Executive Order Reviews

Under the CAA, the Administrator is required to approve section 111(d) and section 111(d)/129 state plan submittals that comply with the provisions of the Act and applicable Federal regulations. 42 U.S.C. 7411(d); 40 CFR part 60, subparts B, Cf and DDDD; and 40 CFR part 62, subpart A. Thus, in reviewing CAA section 111(d) and section 111(d)/129 state plan submittals, the EPA's role is to approve state choices, provided that they meet the approval criteria of the Act and implementing regulations. Accordingly, this action merely approves state law as meeting Federal requirements and does not impose additional requirements beyond those imposed by state law. For that reason, this action:

- Is not a ''significant regulatory action'' subject to review by the Office of Management and Budget under Executive Orders 12866 (58 FR 51735, October 4, 1993) and 13563 (76 FR 3821, January 21, 2011);
- Is not an Executive Order 13771 (82 FR 9339, February 2, 2017) regulatory action because this action is not significant under Executive Order12866;
- Does not impose an information collection burden under the provisions of the Paperwork Reduction Act (44 U.S.C. 3501 *et seq.*);
- Is certified as not having a significant economic impact on a substantial number of small entities under the Regulatory Flexibility Act (5 U.S.C. 601 *et seq.*);
- Does not contain any unfunded mandate or significantly or uniquely affect small governments, described in the Unfunded Mandates Reform Act of 1995 (Pub. L. 104–4);
- Does not have Federalism implications as specified in Executive Order 13132 (64 FR 43255, August 10, 1999);
- Is not an economically significant regulatory action based on health or safety risks subject to Executive Order 13045 (62 FR 19885, April 23, 1997);
- Is not a significant regulatory action subject to Executive Order 13211 (66 FR 28355, May 22, 2001);
- Is not subject to requirements of section 12(d) of the National Technology Transfer and Advancement Act of 1995 (15 U.S.C. 272 note) because application of those requirements would be inconsistent with the CAA; and
- Does not provide EPA with the discretionary authority to address, as appropriate, disproportionate human health or environmental effects, using practicable and legally permissible methods, under Executive Order 12898 (59 FR 7629, February 16, 1994).

In addition, the CAA section 111(d) and section 111(d)/129 plans are not approved to apply in Indian country, as defined at 18 U.S.C. 1151, located in the State. As such, this rule does not have tribal implications, as specified by Executive Order 13175 (65 FR 67249, November 9, 2000), and it will not impose substantial direct costs on tribal governments or preempt tribal law.

List of Subjects in 40 CFR Part 62

Environmental protection, Administrative practice and procedure, Air pollution control, Commercial and industrial solid waste incineration, Hospital medical and infectious waste incineration, Incorporation by reference, Intergovernmental relations, Methane, Municipal solid waste landfill, Reporting and recordkeeping requirements.

Authority: 42 U.S.C. 7401 *et seq.*

Dated: March 15, 2021.

Debra H. Thomas,

Acting Regional Administrator, Region 8.

[FR Doc. 2021–05870 Filed 3–25–21; 8:45 am]

BILLING CODE 6560–50–P

ENVIRONMENTAL PROTECTION AGENCY

40 CFR Part 62

[EPA–R04–OAR–2020–0299; FRL–10011–91–Region 4]

Georgia; Approval of State Plan for Designated Facilities and Pollutants; Hospital/Medical/Infectious Waste Incineration (HMIWI) Units

AGENCY: Environmental Protection Agency.

ACTION: Proposed rule.

SUMMARY: The Environmental Protection Agency (EPA) is proposing to approve the Clean Air Act (CAA or the Act) section 111(d)/129 state plan submitted by the State of Georgia, through the Georgia Department of Natural Resources' Environmental Protection Division on August 1, 2018, and supplemented on January 7, 2019, for implementing and enforcing the Emission Guidelines (EG) and Compliance Schedules applicable to existing Hospital/Medical/Infectious Waste Incineration (HMIWI) units. The state plan provides for implementation and enforcement of the EG, as finalized by EPA on September 15, 1997, and revised on October 6, 2009, applicable to existing HMIWI units for which construction commenced on or before December 1, 2008, or for which modification commenced on or before April 6, 2010. The state plan establishes emission limits, as well as monitoring, operating, recordkeeping, and reporting requirements for affected HMIWI units.

DATES: Comments must be received on or before April 26, 2021.

ADDRESSES: Submit your comments, identified by Docket ID No. [EPA–R04–OAR–2020–0299] at *www.regulations.gov.* Follow the online instructions for submitting comments. Once submitted, comments cannot be edited or removed from *Regulations.gov*. EPA may publish any comment received to its public docket. Do not submit electronically any information you consider to be confidential business information (CBI) or other information whose disclosure is restricted by statute. Multimedia submissions (audio, video, etc.) must be accompanied by a written comment. The written comment is considered the official comment and should include discussion of all points you wish to make. EPA will generally not consider comments or comment contents located outside of the primary submission (*i.e.,* on the web, cloud, or other file sharing system). For additional submission methods, the full EPA public comment policy, information about CBI or multimedia submissions, and general guidance on making effective comments, please visit *http://www2.epa.gov/dockets/commenting-epa-dockets.*

FOR FURTHER INFORMATION CONTACT: Mark Bloeth, Communities and Air Toxics Section, Air Analysis and Support Branch, Air and Radiation Division, U.S. Environmental Protection Agency, Region 4, 61 Forsyth Street SW, Atlanta, Georgia 30303. Mr. Bloeth can be reached via telephone at 404–562–9013 and via email at *bloeth.mark@epa.gov.*

SUPPLEMENTARY INFORMATION:

I. Background

EPA is proposing to approve Georgia's state plan for HMIWI facilities and designated pollutants developed under

sections 111(d) and 129 of the Clean Air Act (CAA) submitted on August 1, 2018, with updates and revisions dated December 19, 2018, and submitted to EPA on January 7, 2019. Georgia's state plan submittal updates requirements for emission limits, waste management plans, training, compliance and performance testing, monitoring, and reporting and recordkeeping requirements that apply to existing HMIWI facilities.

Section 111(d) of the CAA requires states to submit plans to control certain pollutants (designated pollutants) at existing facilities (designated facilities) whenever standards of performance have been established under section 111(b) for new sources of the same type and EPA has established emission guidelines for such existing sources. A designated pollutant is any pollutant for which no air quality criteria have been issued, and which is not included on a list published under section 108(a) or section 112(b)(1)(A) of the CAA, but emissions of which are subject to a standard of performance for new stationary sources.

Section 129 of the CAA directs the Administrator to establish performance standards and EGs under section 111(d) of the Act limiting emissions of nine air pollutants (particulate matter, carbon monoxide, dioxins/furans, sulfur dioxide, nitrogen oxides, hydrogen chloride, lead, mercury, and cadmium) from four categories of solid waste incineration units: Municipal solid waste; hospital/medical/infectious solid waste; commercial and industrial solid waste; and other solid waste.

Section 129 mandates that all plan requirements be at least as protective and restrictive as the promulgated EG. This includes fixed final compliance dates, fixed compliance schedules, and title V permitting requirements for all affected sources. Section 129 also requires that state plans be submitted to EPA within one year after EPA's promulgation of the EG and compliance times. Each state plan submittal must comply with the procedures for plan adoption and submittal codified at 40 CFR part 60, subpart B.

On September 15, 1997, EPA promulgated new source performance standards (NSPS) and EG to reduce air pollution from HMIWI units, which are codified at 40 CFR part 60, subparts Ec and Ce, respectively (See 65 FR 75338). A HMIWI unit as defined in 40 CFR 60.51c is any device that combusts any amount of hospital waste and/or medical/infectious waste.

On September 15, 1998, Georgia originally submitted a section 111(d) state plan for HMIWI which was approved by EPA on February 25, 2000. *See* 65 FR 10022. This 1998 submission implemented the 40 CFR Subpart Ce EG for existing HMIWI, which were promulgated through a September 15, 1997 rulemaking. *See* 62 FR 48348. The EG applied to existing HMIWI that commenced construction on or before June 20, 1996. Georgia has adopted the EG requirements into the Georgia Rule for Air Quality Control, Chapter 391–3–1–.02(2)(iii)—Hospital/Medical/Infectious Waste Incinerators and sections 2.117.2, 2.117.3, and 2.117.4 of the Georgia Department of Natural Resources' Procedures for Testing and Monitoring Sources of Air Pollutants (''PTM''). The most recent EG requirements incorporated in Georgia Rule for Air Quality Control, Chapter 391–3–1–.02(2)(iii) became state effective on March 28, 2018. The same EG requirements incorporated in the PTM became state effective on February 1, 2018.

On October 6, 2009, in accordance with sections 111 and 129 of the Act, EPA promulgated revised HMIWI EG and compliance schedules for the control of emissions from HMIWI units. *See* 74 FR 51368. EPA codified these revised EG at 40 CFR part 60, subpart Ce. EPA amended the NSPS and EG on April 4, 2011 (76 FR 18407), and again on May 13, 2013 (78 FR 28051). Under section 129(b)(2) of the Act and the revised EG at subpart Ce, states with subject sources must submit to EPA plans that implement the revised EG.

On April 4, 2011 (76 FR 18407), and May 13, 2013 (78 FR 28051), EPA promulgated amendments to the Federal HMIWI guidelines that corrected errors made in calculating the emission standard for certain classes of HMIWI and pollutants, and eliminated the startup, shutdown, and malfunction exemption. GAEPD submitted an updated state plan on August 1, 2018 and submitted a supplement on January 7, 2019, to address the above revisions promulgated by EPA.

II. Review of Georgia's HMIWI State Plan Submittal

Georgia submitted a state plan to implement and enforce the EG for existing HMIWI units in the state [1] on August 1, 2018, with a supplemental submission to EPA on January 7, 2019. Georgia adopted the EG requirements into the Georgia Rule for Air Quality Control, Chapter 391–3–1–.02(2)(iii)—Hospital/Medical/Infectious Waste Incinerators, and sections 2.117.2, 2.117.3, and 2.117.4 of the Georgia Department of Natural Resources' PTM.

EPA has reviewed the revised plan for existing HMIWI units in the context of the requirements of 40 CFR part 60, subparts B and Ce. State plans must include the following nine essential elements: Identification of legal authority; identification of mechanism for implementation; inventory of affected facilities; emissions inventory; emission limits; compliance schedules; testing, monitoring, recordkeeping, and reporting; public hearing records; and, annual state progress reports on plan enforcement. For the reasons explained below, EPA is proposing to approve GA's HMIWI state plan as consistent with those requirements.

A. Demonstration of Legal Authority

Under 40 CFR 60.26, an approvable state plan must demonstrate that the State has legal authority to adopt and implement the EG's emission standards and compliance schedule. In its submittal, Georgia cites the State Attorney General's opinion from November 1, 1993, and supplemental letter from November 10, 1994, demonstrating that Georgia's Environmental Protection Division has adequate authority to issue operating permits to all regulated sources for all regulated pollutants, including any pollutant regulated under sections 111, 112, and 129 standards.[2] Georgia also notes that it has amended Georgia Rule 391–3–1–.02(2)(iii)—Hospital/Medical/Infectious Waste Incinerators Constructed on or Before June 20, 1996 to implement and enforce its air quality program. EPA has reviewed the cited authorities and has preliminarily concluded that the State has adequately demonstrated legal authority to implement and enforce the HMIWI state plan in Georgia.

B. Identification of Enforceable State Mechanisms for Implementing the Plan

Under 40 CFR 60.24(a), a state plan must include emission standards, defined at 40 CFR 60.21(f) as ''a legally enforceable regulation setting forth an allowable rate of emissions into the atmosphere, or prescribing equipment specifications for control of air pollution emissions.'' Georgia has adopted enforceable emission standards for affected HMIWI units at Georgia Rule 391–3–1–.02(2)(iii)—Hospital/Medical/Infectious Waste Incinerators Constructed on or Before June 20, 1996, and sections 2.117.2, 2.117.3, and 2.117.4 of the Georgia Department of

[1] The submitted state plan does not apply in Indian country located in the state.

[2] This memorandum and supporting documentation are included in the docket.

Natural Resources' PTM. EPA has preliminarily concluded that these provisions meets the emission standard requirement under 40 CFR 60.24(a).

C. Inventory of Affected Units

Under 40 CFR 60.25(a), a state plan must include a complete source inventory of all HMIWI units. Georgia has submitted an inventory of all affected units within the State. Omission from this inventory of HMIWI units does not exempt an affected facility from the applicable section 111(d)/129 requirements. EPA has preliminarily concluded that Georgia has met the affected unit inventory requirements under 40 CFR 60.25(a).

D. Inventory of Emissions From Affected HMIWI Units

Under 40 CFR 60.25(a), a state plan must include an emissions inventory of the pollutants regulated by the EG. Emissions from HMIWI units may contain cadmium, carbon monoxide, dioxins/furans, hydrogen chloride, lead, mercury, nitrogen oxides, particulate matter, and sulfur dioxide. Georgia submitted an emissions inventory for HMIWI units as part of its state plan. This emissions inventory contains HMIWI unit emissions rates for each regulated pollutant. EPA has preliminarily concluded that Georgia has met the emission inventory requirements of 40 CFR 60.25(a).

E. Emission Limitations, Operator Training and Qualification, and Waste Management Plan for HMIWI Units

Under 40 CFR 60.24(a) and (c), the state plan must include emission standards that are no less stringent than the EG. Georgia requires affected units to comply with the emission limits in 40 CFR part 60, subpart Ce at Rule 391–3–1–.02(2)(iii)4.(ii). As noted above, EPA has preliminarily concluded that Georgia's state plan includes enforceable emission limitations at Georgia Rule 391–3–1–.02(2)(iii)—Hospital/Medical/Infectious Waste Incinerators and sections 2.117.2, 2.117.3, and 2.117.4 of the Georgia Department of Natural Resources' PTM.

40 CFR 60.34e also requires a state plan to include operator training and qualification requirements that are at least as protective as the NSPS requirements at 40 CFR 60.53c. 40 CFR 60.35e requires a state plan to include waste management plan requirement that are at least as protective as the NSPS requirements at 40 CFR 60.55c. Georgia's state plan incorporates the training and waste management requirements from the NSPS by reference into its state regulations at Rule 391–3–1–.02(2)(iii)4. Thus, EPA has preliminarily concluded that Georgia's state plan satisfies the requirements of 40 CFR 60.24(a), 60.24(c), 60.34e, and 60.35e.

F. Compliance Schedules

Under 40 CFR 60.24(a), (c), and (e), each state plan must include a compliance schedule, which requires affected HMIWI units to expeditiously comply with the state plan requirements. EPA has the authority to approve compliance schedule requirements that deviate from those imposed under the EG, so long as those are at least as protective as the EG. In its state plan submittal, Georgia notes that any affected source within the State was required—in the absence of an approved state plan—to comply with the Federal plan requirements no later than October 6, 2014. Because the affected sources are thus already in compliance with the EG requirements, Georgia has not included a compliance schedule in its state plan. In these circumstances, EPA has preliminarily concluded that Georgia's state plan satisfies the requirements of 40 CFR 60.24(a), (c), and (e).

G. Testing, Monitoring, Recordkeeping, and Reporting Requirements

Under 40 CFR 60.24(b)(2) and 60.25(b), an approvable state plan must require that sources conduct testing, monitoring, recordkeeping, and reporting. The EG further specifies that affected HMIWI units must comply with the following: The test methods and procedures at 40 CFR 60.37e(a) through (c); the monitoring requirements at 40 CFR 60.37e(d); and, the recordkeeping and reporting requirements at 40 CFR 60.38e.

Georgia's state plan codifies relevant requirements in section 2.117 of the PTM. Specifically, the PTM specifies applicable: Performance testing requirements at section 2.117.2; monitoring requirements at section 2.117.3; and, recordkeeping and reporting requirements at section 2.117.4. EPA has reviewed these provisions and has preliminarily concluded they are at least as stringent as the EG's testing, monitoring, recordkeeping, and reporting requirements. Accordingly, EPA has preliminarily concluded that Georgia's HMIWI plan satisfies the requirements of 40 CFR 60.24(b)(2) and 60.25(b).

H. A Record of Public Hearing on the State Plan Revision

40 CFR 60.23 sets forth the public participation requirements for each state plan. The State must conduct a public hearing; make all relevant plan materials available to the public prior to the hearing; and, provide notice of such hearing to the public, the Administrator of EPA, each local air pollution control agency, and, in the case of an interstate region, each state within the region. 40 CFR 60.23(f)(1) requires each state plan include certification that the hearing was held, a list of witnesses and their organizational affiliations, if any, appearing at the hearing, and a brief written summary of each presentation or written submission.

As part of its state plan submittal, Georgia provided a notice of the state plan revisions that was submitted to all required parties on August 1, 2018. In addition, on January 7, 2019, Georgia submitted a certification dated December 6, 2018 for a public hearing on the state plan, which was held September 6, 2018. In this proposed action, EPA has preliminarily concluded that these materials satisfy the public participation requirements at 40 CFR 60.23.

I. Annual State Progress Reports to EPA

Under 40 CFR 60.25(e) and (f), the State must provide in its state plan for annual reports to EPA on progress in enforcement of the plan. Accordingly, Georgia provides in its plan that it will submit reports on progress in plan enforcement to EPA on an annual (calendar year) basis, commencing with the first full reporting period after EPA's state plan approval. EPA has preliminarily concluded that Georgia's HMIWI plan satisfies the requirements of 40 CFR 60.25(e) and (f).

III. Incorporation by Reference

In this action, EPA is proposing to include in a final EPA rule regulatory text that includes incorporation by reference. In accordance with the requirements of 1 CFR 51.5, EPA is proposing to incorporate by reference Georgia Rule 391–3–1–.02(2)(iii), ''Hospital/Infectious Waste Incinerators Constructed on or Before June 20, 1996,'' state effective July 23, 2018. This state rule was amended to make it current with the newly updated HMIWI emissions guidelines as well as include the following additional changes: An updated definition of a HMIWI unit to include units that commenced construction on or before December 1, 2008 or that were modified on or before April 6, 2010; additional testing and compliance requirements for NO_X and SO_2; more stringent emissions limits for facilities built after June 20, 1996 but no later than December 1, 2008; and a state rule name change to reflect the aforementioned amendments.

EPA is also proposing to incorporate by reference Georgia Procedures for Testing and Monitoring (PTM) Sources of Air Pollutants section 2.117, state effective July 23, 2018. Georgia's state rule adopts the HMIWI EG by reference, with the exception of some requirements primarily related to operating limits, performance testing, monitoring, demonstration of initial and continuous compliance, and reporting and recordkeeping. These excepted requirements are being addressed by revisions to Georgia's PTM Sources of Air Pollutants in the following sections: Performance testing and compliance requirements in Section 2.117.2, monitoring requirements in Section 2.117.3, and reporting and recordkeeping requirements in Section 2.117.4 of Georgia's PTM. EPA has made, and will continue to make, these materials generally available through *www.regulations.gov* and at the EPA Region 4 office (please contact the person identified in the **FOR FURTHER INFORMATION CONTACT** section of this preamble for more information).

IV. Proposed Action

Pursuant to CAA section 111(d), CAA section 129, and 40 CFR part 60, subparts B and Ce, EPA is proposing to approve Georgia's state plan for regulation of HMIWI units as submitted on August 1, 2018 and supplemented on January 7, 2019. In addition, EPA is proposing to amend 40 CFR part 62, subpart L—Georgia—Air Emissions From Hospital/Medical/Infectious Waste Incinerators to reflect this proposed action.

V. Statutory and Executive Order Reviews

Under the CAA, the Administrator is required to approve a 111(d)/129 plan submission that complies with the provisions of the CAA and applicable Federal regulations. In reviewing 111(d)/129 plan submissions, EPA's role is to approve state choices, provided they meet the criteria and objectives of the CAA and EPA's implementing regulations. Accordingly, this action merely proposes to approve state law as meeting Federal requirements and does not impose additional requirements beyond those imposed by state law. For that reason, this proposed action:

- Is not a significant regulatory action subject to review by the Office of Management and Budget under Executive Orders 12866 (58 FR 51735, October 4, 1993) and 13563 (76 FR 3821, January 21, 2011);
- does not impose an information collection burden under the provisions of the Paperwork Reduction Act (44 U.S.C. 3501 *et seq.*);
- is certified as not having a significant economic impact on a substantial number of small entities under the Regulatory Flexibility Act (5 U.S.C. 601 *et seq.*);
- does not contain any unfunded mandate or significantly or uniquely affect small governments, as described in the Unfunded Mandates Reform Act of 1995 (Pub. L. 104–4);
- does not have Federalism implications as specified in Executive Order 13132 (64 FR 43255, August 10, 1999);
- is not an economically significant regulatory action based on health or safety risks subject to Executive Order 13045 (62 FR 19885, April 23, 1997);
- is not a significant regulatory action subject to Executive Order 13211 (66 FR 28355, May 22, 2001).

In addition, this rulemaking is not subject to requirements of section 12(d) of the National Technology Transfer and Advancement Act of 1995 (15 U.S.C. 272 note) because application of those requirements would be inconsistent with the CAA. It also does not provide EPA with the discretionary authority to address, as appropriate, disproportionate human health or environmental effects, using practicable and legally permissible methods, under Executive Order 12898 (59 FR 7629, February 16, 1994). And it does not have Tribal implications as specified by Executive Order 13175 (65 FR 67249, November 9, 2000), because EPA is not proposing to approve the submitted plan to apply in Indian country located in the state, and because the submitted plan will not impose substantial direct costs on Tribal governments or preempt Tribal law.

List of Subjects in 40 CFR Part 62

Environmental protection, Air pollution control, Administrative practice and procedure, Hospital, medical, and infectious waste incineration units, Incorporation by reference, Intergovernmental relations, Reporting and recordkeeping requirements, Sulfur oxides, Waste treatment and disposal.

Authority: 42 U.S.C. 7411.

Dated: March 16, 2021.

John Blevins,

Acting Regional Administrator, Region 4.

[FR Doc. 2021–06080 Filed 3–25–21; 8:45 am]

BILLING CODE 6560–50–P

Notices

Federal Register

Vol. 86, No. 57

Friday, March 26, 2021

This section of the FEDERAL REGISTER contains documents other than rules or proposed rules that are applicable to the public. Notices of hearings and investigations, committee meetings, agency decisions and rulings, delegations of authority, filing of petitions and applications and agency statements of organization and functions are examples of documents appearing in this section.

DEPARTMENT OF AGRICULTURE

Agricultural Marketing Service

[Doc. No. AMS–DA–21–0024]

Notice of Request for Extension and Revision of a Currently Approved Information Collection for the Dairy Product Mandatory Reporting Program

AGENCY: Agricultural Marketing Service, USDA.

ACTION: Notice and request for comments.

SUMMARY: In accordance with the Paperwork Reduction Act of 1995, this notice announces the Agricultural Marketing Service's (AMS) intention to request an extension and revision of a currently approved information collection under the Dairy Product Mandatory Reporting Program. The information collected supports the marketing of dairy products and is used to verify compliance with Federal milk marketing regulations.

DATES: Comments on this notice must be received by May 25, 2021, to be considered.

ADDRESSES: Comments should be submitted at the Federal eRulemaking portal: *www.regulations.gov.* All comments can be viewed at: *www.regulations.gov.*

FOR FURTHER INFORMATION CONTACT: Roger Cryan, Director, Economics Division, USDA/AMS/Dairy Program, STOP 0229—Room 2753, 1400 Independence Avenue SW, Washington, DC 20250–0229; *roger.cryan@usda.gov.*

SUPPLEMENTARY INFORMATION:

Title: Dairy Products Mandatory Sales Reporting.

OMB Number: 0581–0274.

Expiration Date of Approval: May 31, 2021.

Type of Request: Extension and revision of a currently approved collection.

Abstract: Under the Agricultural Marketing Act of 1946 (7 U.S.C. 1621 *et seq.*), as amended, persons engaged in manufacturing dairy products are required to provide to the Department of Agriculture (USDA) certain information, including the price, quantity, and moisture content, where applicable, of dairy products sold by the manufacturer. Manufacturers and other persons storing dairy products must also report to USDA information on the quantity of dairy products stored. This information is used by USDA to help administer Federal programs and is used by the dairy industry in planning, pricing, and projecting supplies of milk and milk products.

Under the Dairy Product Mandatory Reporting Program (7 CFR part 1170), various manufacturer reports are filed electronically on a weekly basis. USDA publishes composites of the information obtained to help industry members make informed marketing decisions regarding dairy products. The information is also used to establish minimum prices for Class III and Class IV milk under Federal milk marketing orders. Additional paper forms are filed by manufacturers on an annual basis to validate participation in the mandatory reporting program. USDA uses the information collected to verify compliance with applicable regulations.

Only authorized representatives of USDA, including AMS Dairy Program's regional and headquarters staff, have access to information provided on the forms.

Requesting public comments on the information collection and forms described below is part of the process to obtain approval through the Office of Management and Budget (OMB). Forms needing OMB approval are contained in OMB No. 0581–0274 and include forms for reporting cheddar cheese price, volume, and moisture content (DY–202 and DY–203); butter price and volume (DY–201); nonfat dry milk price and volume (DY–205); and dry whey price and volume (DY–204). Annual validation information is reported on Forms DA–230 and DA–230–S. Manufacturers and others who are required to file reports under this program must also maintain original records associated with the sale and storage of dairy products for two years and must make those records available to USDA upon request. Manufacturers who produce and annually market less than one million pounds of cheddar cheese, butter, nonfat dry milk, or dry whey are exempt from the reporting requirements for those products.

Information collection requirements included in this request for an extension are as follows:

(1) Dairy Products Sales, Cheddar Cheese, 40-Pound Blocks

Estimate of Burden: The public reporting burden for this collection of information is estimated to average 20 minutes per week for each report submitted.

Respondents: Cheddar cheese manufacturers of 40-pound blocks. Each reporting entity may report for a single cheddar cheese plant or it may report for more than one cheddar cheese plant, depending upon how the business is structured.

Estimated Number of Respondents: 17.

Estimated Number of Responses per Respondent: 52.

Estimated Total Annual Burden on Respondents: 295 hours.

(2) Dairy Products Sales, Cheddar Cheese, 500-Pound Barrels

Estimate of Burden: The public reporting burden for this collection of information is estimated to average 20 minutes per week for each report submitted.

Respondents: Cheddar cheese manufacturers of 500-pound barrels. Each reporting entity may report for a single cheddar cheese plant or it may report for more than one cheddar cheese plant, depending upon how the business is structured.

Estimated Number of Respondents: 11.

Estimated Number of Responses per Respondent: 52.

Estimated Total Annual Burden on Respondents: 191 hours.

(3) Dairy Products Sales, Butter

Estimate of Burden: The public reporting burden for this collection of information is estimated to average 20 minutes per week for each report submitted.

Respondents: Butter manufacturers. Each reporting entity may report for a single butter plant or it may report for more than one butter plant, depending upon how the business is structured.

Estimated Number of Respondents: 18.

Estimated Number of Responses per Respondent: 52.

Estimated Total Annual Burden on Respondents: 312 hours.

(4) Dairy Products Sales, Nonfat Dry Milk

Estimate of Burden: The public reporting burden for this collection of information is estimated to average 20 minutes per week for each report submitted.

Respondents: Nonfat dry milk (NFDM) manufacturers. Each reporting entity may report for a single NFDM plant or it may report for more than one NFDM plant, depending upon how the business is structured.

Estimated Number of Respondents: 26.

Estimated Number of Responses per Respondent: 52.

Estimated Total Annual Burden on Respondents: 451 hours.

(5) Dairy Products Sales, Dry Whey

Estimate of Burden: The public reporting burden for this collection of information is estimated to average 20 minutes per week for each report submitted.

Respondents: Dry whey manufacturers. Each reporting entity may report for a single dry whey plant or it may report for more than one dry whey plant, depending upon how the business is structured.

Estimated Number of Respondents: 14.

Estimated Number of Responses per Respondent: 52.

Estimated Total Annual Burden on Respondents: 243 hours.

(6) Annual Validation Survey

Estimate of Burden: The public reporting burden for this collection of information is estimated to average 20 minutes per year for each report submitted.

Respondents: Dairy manufacturers. Each reporting entity may report for a single plant or it may report for more than one plant, depending upon how the business is structured.

Estimated Number of Respondents: 105.

Estimated Number of Responses per Respondent: 1.

Estimated Total Annual Burden on Respondents: 35 hours.

(7) Survey Follow-Up, Verification

Estimate of Burden: The public reporting burden for this collection of information is estimated to average 5 minutes for each contact from AMS.

Respondents: Dairy manufacturers. Each reporting entity may report for a single plant or it may report for more than one plant, depending upon how the business is structured. AMS may contact manufacturers as necessary to follow up on missing or incomplete reports and ensure that accurate information is provided by manufacturers.

Estimated Number of Respondents: 7.

Estimated Number of Responses per Respondent: 52.

Estimated Total Annual Burden on Respondents: 30 hours.

Comments are invited on: (1) Whether the proposed collection of the information is necessary for the proper performance of the functions of the agency, including whether the information will have practical utility; (2) the accuracy of the agency's estimate of the burden of the proposed collection of information, including the validity of the methodology and assumptions used; (3) ways to enhance the quality, utility, and clarity of the information to be collected; and (4) ways to minimize the burden of the collection of information on those who are to respond, including through the use of appropriate automated, electronic, mechanical, or other technological collection techniques or other forms of information technology. All responses to this notice will be summarized and included in the request for OMB approval. All comments will also become a matter of public record.

Bruce Summers,

Administrator, Agricultural Marketing Service.

[FR Doc. 2021–06225 Filed 3–25–21; 8:45 am]

BILLING CODE P

DEPARTMENT OF AGRICULTURE

Agricultural Marketing Service

[Doc. No. AMS–FGIS–21–0010]

United States Standards for Sorghum

AGENCY: Agricultural Marketing Service, USDA.

ACTION: Request for information.

SUMMARY: The United States Department of Agriculture's (USDA) Agricultural Marketing Service (AMS) is seeking comments from the public regarding the United States (U.S.) Standards for Sorghum under the United States Grain Standards Act (USGSA). To ensure that standards and official grading practices remain relevant, AMS invites interested parties to comment on whether the current sorghum standards and grading practices need to be changed.

DATES: We will consider comments we receive by June 24, 2021.

ADDRESSES: Interested persons are invited to submit written comments concerning this notice. All comments must be submitted through the Federal e-rulemaking portal at *http://www.regulations.gov* and should reference the document number and the date and page number of this issue of the **Federal Register**. Instructions for submitting and reading comments are detailed on the site. All comments submitted in response to this notice will be included in the record and will be made available to the public. Please be advised that the identity of the individuals or entities submitting comments will be made public on the internet at the address provided above.

FOR FURTHER INFORMATION CONTACT: Loren Almond, USDA AMS; Telephone: (816) 891–0422; email: *Loren.L.Almond@usda.gov.*

SUPPLEMENTARY INFORMATION: Section 4 of the USGSA (7 U.S.C. 76(a)) grants the Secretary of Agriculture the authority to establish standards for sorghum and other grains regarding kind, class, quality, and condition. The sorghum standards, established by USDA on December 1, 1924, were last revised in 2007 (72 FR 39732) and appear in the USGSA regulations at 7 CFR 810.1401–810.1405. The standards facilitate sorghum marketing and define U.S. sorghum quality in the domestic and global marketplace. The standards define commonly used industry terms; contain basic principles governing the application of standards, such as the type of sample used for a particular quality analysis; define the basis of determination; and specify grades and grade requirements. Official procedures for determining grading factors are provided in the Grain Inspection Handbook, Book II, Chapter 9, ''Sorghum.'' Together, the grading standards and official procedures allow buyers and sellers to communicate quality requirements, compare sorghum quality using equivalent forms of measurement, and assist in price discovery.

FGIS grading and inspection services are provided through a network of Federal, state, and private laboratories that conduct tests to determine the quality and condition of sorghum. These tests are conducted in accordance with applicable standards using approved methodologies and can be applied at any point in the marketing chain. Furthermore, the tests yield rapid, reliable, and consistent results. In addition, FGIS-issued certificates describing the quality and condition of

graded sorghum are accepted as *prima facie* evidence in all federal courts. U.S. Standards for Sorghum and the affiliated grading and testing services offered by FGIS verify that a seller's sorghum meet specified requirements, and ensure that customers receive the quality of sorghum they purchased.

In order for U.S. standards and grading procedures for sorghum to remain relevant, AMS is issuing this request for information to invite interested parties to submit comments, ideas, and suggestions on all aspects of the U.S. Standards for Sorghum and official procedures.

Authority: 7 U.S.C. 71–87k.

Bruce Summers,

Administrator, Agricultural Marketing Service.

[FR Doc. 2021–06230 Filed 3–25–21; 8:45 am]

BILLING CODE P

DEPARTMENT OF AGRICULTURE

Agricultural Marketing Service

[Doc. No. AMS–LP–20–0103]

Request for Extension and Revision of a Currently Approved Information Collection

AGENCY: Agricultural Marketing Service, USDA.

ACTION: Notice and request for comments.

SUMMARY: In accordance with the Paperwork Reduction Act of 1995, this notice announces the U.S. Department of Agriculture (USDA) Agricultural Marketing Service's (AMS) intent to request approval from the Office of Management and Budget (OMB) for an extension of and revision to the currently approved information collection used in support of the Regulations Governing the Inspection of Eggs (as authorized by the Egg Products Inspection Act (EPIA)), which is commonly referred to as the Shell Egg Surveillance Program (OMB: 0581–0113).

DATES: Comments must be received by May 25, 2021.

ADDRESSES: Interested persons are invited to submit comments concerning this notice by using the electronic process available at *www.regulations.gov.* Written comments may also be submitted to Quality Assessment Division; Livestock and Poultry Program; AMS, USDA; 1400 Independence Avenue SW, Stop 0258; Washington, DC 20250–0258. All comments should reference the docket number AMS–LP–20–0103, the date of submission, and the page number of this issue of the **Federal Register**. All comments received will be posted without change, including any personal information provided, at *www.regulations.gov* and will be made available for public inspection at the above physical address during regular business hours.

FOR FURTHER INFORMATION CONTACT: Julie Hartley, Branch Chief, Quality Assessment Division; (202) 720–7316; or *Julie.hartley@usda.gov.*

SUPPLEMENTARY INFORMATION:

Overview of This Information Collection

(1) *Agency:* USDA, AMS.

(2) *Title:* Regulations for the Inspection of Eggs (Egg Products Inspection Act).

(3) *OMB Number:* 0581–0113.

(4) *Expiration Date of Approval:* June 30, 2021.

(5) *Type of Request:* Request for extension of and revision of a currently approved information collection.

(6) *Abstract:* Congress enacted the EPIA (21 U.S.C. 1031–1056) to provide, in part, a mandatory inspection program to control the disposition of dirty and checked shell eggs; to control unwholesome, adulterated, and inedible shell eggs that are unfit for human consumption; and to control the movement and disposition of imported shell eggs.

The EPIA authorized USDA to issue regulations describing how this function would be carried out to ensure that only eggs fit for human consumption are used for such purposes. To this end, USDA published the EPIA, commonly referred to as the Shell Egg Surveillance Program, in 7 CFR part 57.

Under the Shell Egg Surveillance Program, shell egg handlers and hatcheries are required to register with USDA. A State or Federal surveillance inspector visits each registered handler quarterly to verify that shell eggs packed for consumer use are in compliance with the regulations (*e.g.,* restricted eggs are not used for human consumption, storage temperatures are maintained at 45 degrees ambient, etc.), that restricted eggs are being disposed of properly, and that adequate records are being maintained.

The information and recordkeeping requirements in this request are essential to carry out the intent of Congress, to administer the mandatory inspection program, and to take regulatory action, in accordance with the regulations and the EPIA. The forms within this collection package require the minimum information necessary to effectively carry out the requirements of the regulations, and their use is necessary to fulfill the intent of the EPIA.

The information collected is used only by authorized representatives of the AMS Livestock and Poultry Program's Quality Assessment Division, which includes State agencies authorized to conduct inspections on AMS' behalf. The information is only used to verify compliance with the EPIA and the regulations, and it is used to facilitate regulatory action. AMS is the primary user of the information; secondary users include each authorized State agency that has a cooperative agreement with AMS. There have been no changes in the Shell Egg Surveillance Program or in the information collection requirements. There is an overall decrease of −462.85 burden hours and a decrease of 45 respondents from the previous submission primarily due to industry consolidation.

(7) *Estimate of Burden:* Public reporting burden for this collection of information is estimated to average .28 hours per response.

(8) *Respondents:* Businesses or other for-profits, and small businesses or organizations.

(9) *Estimated Number of Respondents:* 760.

(10) *Estimated Number of Responses per Respondent:* 7.

(11) *Estimated Total Annual Responses:* 5,235.50.

(12) *Estimated Total Annual Burden on Respondents:* 1,479.43 hours.

Comments are invited on: (1) Whether the proposed collection of information is necessary for the proper performance of the functions of AMS, including whether the information will have practical utility; (2) the accuracy of AMS' estimate of the burden of the proposed collection of information including the validity of the methodology and assumptions used; (3) ways to enhance the quality, utility, and clarity of the information to be collected; and (4) ways to minimize the burden of the collection of information on those who are to respond, including the use of appropriate automated, electronic, mechanical, or other technological collection techniques or other forms of information technology.

All responses to this notice will be summarized and included in the request for OMB approval. All responses will become a matter of public record,

including any personal information provided.

Bruce Summers,

Administrator, Agricultural Marketing Service.

[FR Doc. 2021–06226 Filed 3–25–21; 8:45 am]

BILLING CODE P

CHEMICAL SAFETY AND HAZARD INVESTIGATION BOARD

Sunshine Act Meeting

TIME AND DATE: April 2, 2021, 11:00 a.m. EDT.

PLACE: Public Meeting Hosted via Audio Conference.

STATUS: Open to the public.

MATTERS TO BE CONSIDERED: The Chemical Safety and Hazard Investigation Board (CSB) will convene a public meeting on Friday, April 2, 2021, at 11:00 a.m. EDT. This meeting serves to fulfill its quarterly Spring public meeting requirement. The Board will review the CSB's progress in meeting its mission and highlight safety products newly released through investigations and safety recommendations.

Additional Information

This meeting will only be available via the following call-in number. If you require a translator or interpreter, please notify the individual listed below as the ''Contact Person for Further Information,'' at least three business days prior to the meeting. Audience members should use the following information to access the meeting:

Dial-In: 1 (800) 697–5978 Audience US Toll Free; 1 (630) 691–2750 Audience US Toll

Passcode: 9464 051#

Please dial the phone number five minutes prior to the start of the conference call and enter your passcode.

The CSB is an independent federal agency charged with investigating incidents and hazards that result, or may result, in the catastrophic release of extremely hazardous substances. The agency's Board Members are appointed by the President and confirmed by the Senate. CSB investigations look into all aspects of chemical accidents and hazards, including physical causes such as equipment failure as well as inadequacies in regulations, industry standards, and safety management systems.

Contact Person for Further Information

Hillary Cohen, Communications Manager, at *public@csb.gov* or (202) 446–8094. Further information about this public meeting can be found on the CSB website at: *www.csb.gov.*

Dated: March 24, 2021.

Sabrina Morris,

Board Affairs Specialist, Chemical Safety and Hazard Investigation Board.

[FR Doc. 2021–06441 Filed 3–24–21; 4:15 pm]

BILLING CODE 6350–01–P

COMMISSION ON CIVIL RIGHTS

Notice of Public Meeting of the Hawai'i Advisory Committee

AGENCY: U.S. Commission on Civil Rights.

ACTION: Announcement of meeting.

SUMMARY: Notice is hereby given, pursuant to the provisions of the rules and regulations of the U.S. Commission on Civil Rights (Commission) and the Federal Advisory Committee Act (FACA) that a teleconference meeting of the Hawai'i Advisory Committee to the Commission will be held from 10:00 a.m. to 11:30 p.m. on Wednesday, April 28, 2021 (Hawaiian Time). The purpose of the meeting is to review a draft of their report findings and recommendations focused on COVID–19 and its impact on Pacific Islander communities.

DATES: The meeting will be held on Wednesday, April 28, 2021 from 10:00 a.m.–11:30 p.m. HST.

FOR FURTHER INFORMATION CONTACT: Ana Victoria Fortes, Designated Federal Officer (DFO) at *afortes@usccr.gov* or by phone at (202) 681–0857.

SUPPLEMENTARY INFORMATION:

Public Call Information: Dial: 800–367–2403; Conference ID: 1559261.

For copies of meeting documents, email *afortes@usccr.gov.* This meeting is available to the public through the following toll-free call-in number: 800–367–2403, conference ID number: 1559261. Any interested member of the public may call this number and listen to the meeting. Callers can expect to incur charges for calls they initiate over wireless lines, and the Commission will not refund any incurred charges. Callers will incur no charge for calls they initiate over land-line connections to the toll-free telephone number. Persons with hearing impairments may also follow the proceedings by first calling the Federal Relay Service at 1–800–877–8339 and providing the Service with the conference call number and conference ID number.

Members of the public are entitled to make comments during the open period at the end of the meeting. Members of the public may also submit written comments; the comments must be received in the Regional Programs Unit within 30 days following the meeting. Written comments may be emailed to Ana Victoria Fortes at *afortes@usccr.gov.*

Records and documents discussed during the meeting will be available for public viewing prior to and after the meeting at *https://www.facadatabase.gov/FACA/FACAPublicViewCommitteeDetails?id=a10t0000001gzl0AAA.*

Please click on ''Committee Meetings'' tab. Records generated from this meeting may also be inspected and reproduced at the Regional Programs Unit, as they become available, both before and after the meeting. Persons interested in the work of this Committee are directed to the Commission's website, *https://www.usccr.gov,* or may contact the Regional Programs Unit at the above email or street address.

Agenda

Welcome
II. Review Report
—Findings and Recommendations
III. Public Comment
VI. Adjournment

Dated: March 22, 2021.

David Mussatt,

Supervisory Chief, Regional Programs Unit.

[FR Doc. 2021–06218 Filed 3–25–21; 8:45 am]

BILLING CODE P

DEPARTMENT OF COMMERCE

Foreign-Trade Zones Board

[B–25–2021]

Foreign-Trade Zone 149—Freeport, Texas; Application for Expansion and Modification of Subzone 149C; Phillips 66 Company, Brazoria County, Texas

An application has been submitted to the Foreign-Trade Zones (FTZ) Board by Port Freeport, grantee of FTZ 149, requesting authority to modify the boundaries of Subzone 149C on behalf of Phillips 66 Company located in Brazoria County, Texas. The application was submitted pursuant to the provisions of the Foreign-Trade Zones Act, as amended (19 U.S.C. 81a-81u), and the regulations of the FTZ Board (15 CFR part 400). It was formally docketed on March 22, 2021.

Subzone 149C was approved by the Board on September 25, 1997 (Board Order 920, 62 FR 51830, October 3, 1997) and expanded on August 2, 2016 (Board Order 2010, 81 FR 52823–52824, August 10, 2016). The subzone currently

consists of six sites totaling 2,170 acres: *Site 1* (1,315 acres)—main refinery and petrochemical complex located at 8189 Old FM 524 Road, Old Ocean; *Site 2* (160 acres)—Freeport I Terminal and storage facility located at County Road 731, some 28 miles southeast of the refinery; *Site 3* (183 acres)—six crude oil storage tanks at Jones Creek Terminal located at 6215 State Highway 36, some 17 miles southeast of the refinery; *Site 4* (34 acres)—San Bernard Terminal and storage facility located at County Road 378, 5 miles southeast of the refinery; *Site 5* (478 acres)—Clemens Terminal underground LPG storage located at County Road 314, 15 miles east of the refinery; and, *Site 6*—consisting of a six-mile pipeline.

The applicant is requesting authority to modify the boundaries of the subzone's Site 1 as follows: (1) Expand the site by adding 490 acres; and, 2) remove 220 acres from the site. Modified Site 1 would consist of 1,585 acres. No additional authorization for production activity has been requested at this time.

In accordance with the FTZ Board's regulations, Camille Evans of the FTZ Staff is designated examiner to review the application and make recommendations to the FTZ Board.

Public comment is invited from interested parties. Submissions shall be addressed to the FTZ Board's Executive Secretary and sent to: *ftz@trade.gov.* The closing period for their receipt is May 3, 2021. Rebuttal comments in response to material submitted during the foregoing period may be submitted during the subsequent 15-day period to May 18, 2021.

A copy of the application will be available for public inspection in the ''Reading Room'' section of the FTZ Board's website, which is accessible via *www.trade.gov/ftz.*

For further information, contact Camille Evans at *Camille.Evans@trade.gov.*

Dated: March 22, 2021.

Andrew McGilvray,

Executive Secretary.

[FR Doc. 2021–06294 Filed 3–25–21; 8:45 am]

BILLING CODE 3510–DS–P

DEPARTMENT OF COMMERCE

International Trade Administration

[A–533–840]

Certain Frozen Warmwater Shrimp from India: Notice of Final Results of Antidumping Duty Changed Circumstances Review

AGENCY: Enforcement and Compliance, International Trade Administration, Department of Commerce.

SUMMARY: On December 16, 2020, the Department of Commerce (Commerce) published the preliminary results of a changed circumstances review of the antidumping duty order on certain frozen warmwater shrimp from India. For these final results, Commerce continues to find that LNSK Greenhouse Agro Products LLP (LNSK Greenhouse Agro) is the successor-in-interest to Green House Agro Products (Greenhouse Agro) in the context of the antidumping duty order on certain frozen warmwater shrimp from India.

DATES: Applicable March 26, 2021.

FOR FURTHER INFORMATION CONTACT: Adam Simons, AD/CVD Operations, Office II, Enforcement and Compliance, International Trade Administration, U.S. Department of Commerce, 1401 Constitution Avenue NW, Washington, DC 20230; telephone: (202) 482–6172.

SUPPLEMENTARY INFORMATION:

Background

On August 17, 2020, LNSK Greenhouse Agro requested that Commerce conduct an expedited changed circumstances review, pursuant to section 751(b)(1) of the Tariff Act of 1930, as amended (the Act), 19 CFR 351.216, and 19 CFR 351.221(c)(3), to confirm that LNSK Greenhouse Agro is the successor-in-interest to Greenhouse Agro for purposes of determining antidumping duty cash deposits and liabilities.[1] In its submission, LNSK Greenhouse Agro stated that Greenhouse Agro converted its corporate structure from a partnership to a limited liability partnership and changed the company's name to LNSK Greenhouse Agro, but is otherwise unchanged with respect to the production and sale of subject merchandise.[2]

On October 7, 2020, Commerce initiated this changed circumstances review.[3] On December 16, 2020, Commerce published the *Preliminary Results,* preliminarily determining that LNSK Greenhouse Agro is the successor-in-interest to Greenhouse Agro.[4] In the *Preliminary Results,* we provided all interested parties with an opportunity to comment.[5] However, we received no comments.

Scope of the Order

The merchandise subject to the order is certain frozen warmwater shrimp.[6] The product is currently classified under the following Harmonized Tariff Schedule of the United States (HTSUS) numbers: 0306.17.00.03, 0306.17.00.06, 0306.17.00.09, 0306.17.00.12, 0306.17.00.15, 0306.17.00.18, 0306.17.00.21, 0306.17.00.24, 0306.17.00.27, 0306.17.00.40, 1605.21.10.30, and 1605.29.10.10. Although the HTSUS numbers are provided for convenience and customs purposes, the written product description remains dispositive.

Final Results of Changed Circumstances Review

For the reasons stated in the *Preliminary Results,* Commerce continues to find that LNSK Greenhouse Agro is the successor-in-interest to Greenhouse Agro. As a result of this determination and consistent with established practice, we find that LNSK Greenhouse Agro should receive the cash deposit rate previously assigned to Greenhouse Agro. Consequently, Commerce will instruct U.S. Customs and Border Protection to suspend liquidation of all shipments of subject merchandise produced or exported by LNSK Greenhouse Agro and entered, or withdrawn from warehouse, for consumption on or after the publication date of this notice in the **Federal Register** at 3.06 percent, which is the current antidumping duty cash deposit rate for Greenhouse Agro.[7] This cash deposit requirement shall remain in effect until further notice.

[1] *See* LNSK Greenhouse Agro's Letter, ''LNSK Greenhouse Agro's Request for a Changed Circumstances Review in Certain Frozen Warmwater Shrimp from India, Case No. A–533–840,'' dated August 17, 2020.

[2] *Id.*

[3] *See Certain Frozen Warmwater Shrimp from India: Notice of Initiation of Antidumping Duty Changed Circumstances Review,* 85 FR 63252 (October 7, 2020).

[4] *See Certain Frozen Warmwater Shrimp from India: Preliminary Results of Antidumping Duty Changed Circumstances Review,* 85 FR 81449 (December 16, 2020) (*Preliminary Results*).

[5] *Id.*

[6] For a complete description of the scope of the order, *see Certain Frozen Warmwater Shrimp from India: Final Results of Antidumping Duty Administrative Review and Final Determination of No Shipments; 2018–2019,* 85 FR 85580 (December 29, 2020), and accompanying Issues and Decision Memorandum at ''Scope of the Order'' section.

[7] *Id.,* 85 FR at 85582.

Notification to Interested Parties

We are issuing this determination and publishing these final results and notice in accordance with sections 751(b)(1) and 777(i)(1) and (2) of the Act and 19 CFR 351.216(e), 351.221(b), and 351.221(c)(3).

Dated: March 22, 2021.

Christian Marsh,

Acting Assistant Secretary for Enforcement and Compliance.

[FR Doc. 2021–06297 Filed 3–25–21; 8:45 am]

BILLING CODE 3510–DS–P

DEPARTMENT OF COMMERCE

International Trade Administration

[A–570–026]

Corrosion-Resistant Steel Products From the People's Republic of China: Final Determination of No Shipments in the Antidumping Duty Administrative Review; 2018–2019

AGENCY: Enforcement and Compliance, International Trade Administration, Department of Commerce.

SUMMARY: The Department of Commerce (Commerce) continues to find that Nippon Steel and Sumikin Sales Vietnam Co., Ltd. (NSSVC), Hoa Sen Group (HSG), and Ton Dong A Corporation (TDA) made no shipments of corrosion-resistant steel products (CORE) from the People's Republic of China (subject merchandise) during the period of review (POR) July 1, 2018, through June 30, 2019.

DATES: Applicable March 26, 2021.

FOR FURTHER INFORMATION CONTACT: Gene H. Calvert, AD/CVD Operations, Office VII, Enforcement and Compliance, International Trade Administration, U.S. Department of Commerce, 1401 Constitution Avenue NW, Washington, DC 20230; telephone: (202) 482–3586.

SUPPLEMENTARY INFORMATION:

Background

On November 25, 2020, Commerce published the *Preliminary Results* of this administrative review in the **Federal Register**.[1] Commerce invited parties to submit comments on the *Preliminary Results.* No interested party submitted comments concerning the *Preliminary Results* or requested a hearing in this administrative review. Accordingly, the final results of this administrative review remain unchanged from the *Preliminary Results.* The current deadline for these final results is March 25, 2021. Commerce conducted this review in accordance with section 751(a)(1)(B) of the Tariff Act of 1930, as amended (the Act).

Scope of the Order

The products covered by this order are certain flat-rolled steel products, either clad, plated, or coated with corrosion-resistant metals such as zinc, aluminum, or zinc-, aluminum-, nickel—or iron-based alloys, whether or not corrugated or painted, varnished, laminated, or coated with plastics or other non-metallic substances in addition to the metallic coating. The products covered include coils that have a width of 12.7 mm or greater, regardless of form of coil (*e.g.,* in successively superimposed layers, spirally oscillating, *etc.*). The products covered also include products not in coils (*e.g.,* in straight lengths) of a thickness less than 4.75 mm and a width that is 12.7 mm or greater and that measures at least 10 times the thickness. The products covered also include products not in coils (*e.g.,* in straight lengths) of a thickness of 4.75 mm or more and a width exceeding 150 mm and measuring at least twice the thickness. The products described above may be rectangular, square, circular, or other shape and include products of either rectangular or non-rectangular cross-section where such cross-section is achieved subsequent to the rolling process, *i.e.,* products which have been ''worked after rolling'' (*e.g.,* products which have been beveled or rounded at the edges). For purposes of the width and thickness requirements referenced above:

(1) Where the nominal and actual measurements vary, a product is within the scope if application of either the nominal or actual measurement would place it within the scope based on the definitions set forth above, and

(2) where the width and thickness vary for a specific product (*e.g.,* the thickness of certain products with non-rectangular cross-section, the width of certain products with non-rectangular shape, *etc.*), the measurement at its greatest width or thickness applies.

Steel products included in the scope of this order are products in which: (1) Iron predominates, by weight, over each of the other contained elements; (2) the carbon content is 2 percent or less, by weight; and (3) none of the elements listed below exceeds the quantity, by weight, respectively indicated:

- 2.50 percent of manganese, or
- 3.30 percent of silicon, or
- 1.50 percent of copper, or
- 1.50 percent of aluminum, or
- 1.25 percent of chromium, or
- 0.30 percent of cobalt, or
- 0.40 percent of lead, or
- 2.00 percent of nickel, or
- 0.30 percent of tungsten (also called wolfram), or
- 0.80 percent of molybdenum, or
- 0.10 percent of niobium (also called columbium), or
- 0.30 percent of vanadium, or
- 0.30 percent of zirconium

Unless specifically excluded, products are included in this scope regardless of levels of boron and titanium.

For example, specifically included in this scope are vacuum degassed, fully stabilized (commonly referred to as interstitial-free (IF)) steels and high strength low alloy (HSLA) steels. IF steels are recognized as low carbon steels with micro-alloying levels of elements such as titanium and/or niobium added to stabilize carbon and nitrogen elements. HSLA steels are recognized as steels with micro-alloying levels of elements such as chromium, copper, niobium, titanium, vanadium, and molybdenum.

Furthermore, this scope also includes Advanced High Strength Steels (AHSS) and Ultra High Strength Steels (UHSS), both of which are considered high tensile strength and high elongation steels.

Subject merchandise also includes corrosion-resistant steel that has been further processed in a third country, including but not limited to annealing, tempering, painting, varnishing, trimming, cutting, punching and/or slitting or any other processing that would not otherwise remove the merchandise from the scope of the order if performed in the country of manufacture of the in-scope corrosion resistant steel.

All products that meet the written physical description, and in which the chemistry quantities do not exceed any one of the noted element levels listed above, are within the scope of this order unless specifically excluded. The following products are outside of and/or specifically excluded from the scope of this order:

- Flat-rolled steel products either plated or coated with tin, lead, chromium, chromium oxides, both tin and lead (''terne plate''), or both chromium and chromium oxides (''tin free steel''), whether or not painted, varnished or coated with plastics or other non-metallic substances in addition to the metallic coating;

[1] *See Corrosion-Resistant Steel Products from the People's Republic of China: Preliminary Determination of No Shipments in the Antidumping Duty Administrative Review and Rescission, in Part; 2018–2019,* 85 FR 75299 (November 25, 2020) (*Preliminary Results*).

• Clad products in straight lengths of 4.7625 mm or more in composite thickness and of a width which exceeds 150 mm and measures at least twice the thickness; and

• Certain clad stainless flat-rolled products, which are three-layered corrosion-resistant flat-rolled steel products less than 4.75 mm in composite thickness that consist of a flat-rolled steel product clad on both sides with stainless steel in a 20%–60%–20% ratio.

The products subject to the order are currently classified in the Harmonized Tariff Schedule of the United States (HTSUS) under item numbers: 7210.30.0030, 7210.30.0060, 7210.41.0000, 7210.49.0030, 7210.49.0091, 7210.49.0095, 7210.61.0000, 7210.69.0000, 7210.70.6030, 7210.70.6060, 7210.70.6090, 7210.90.6000, 7210.90.9000, 7212.20.0000, 7212.30.1030, 7212.30.1090, 7212.30.3000, 7212.30.5000, 7212.40.1000, 7212.40.5000, 7212.50.0000, and 7212.60.0000.

The products subject to the order may also enter under the following HTSUS item numbers: 7210.90.1000, 7215.90.1000, 7215.90.3000, 7215.90.5000, 7217.20.1500, 7217.30.1530, 7217.30.1560, 7217.90.1000, 7217.90.5030, 7217.90.5060, 7217.90.5090, 7225.91.0000, 7225.92.0000, 7225.99.0090, 7226.99.0110, 7226.99.0130, 7226.99.0180, 7228.60.6000, 7228.60.8000, and 7229.90.1000.

The HTSUS subheadings above are provided for convenience and customs purposes only. The written description of the scope of the order is dispositive.

Final Determination of No Shipments

In the *Preliminary Results,* Commerce determined that NSSVC, HSG, and TDA had no shipments of subject merchandise during the POR.[2] As Commerce did not receive any comments on its preliminary finding, Commerce continues to find that NSSVC, HSG, and TDA did not have any shipments of subject merchandise during the POR and intends to instruct U.S. Customs and Border Protection (CBP) to liquidate any suspended entries that entered under that exporter's case number (*i.e.,* at that exporter's cash deposit rate) at the China-wide entity rate, 199.43 percent.[3] Commerce intends to issue appropriate assessment instructions directly to CBP no earlier than 35 days after the date of publication of this notice in the **Federal Register**.

Notification to Importers

This notice serves as a final reminder to importers of their responsibility under 19 CFR 351.402(f)(2) to file a certificate regarding the reimbursement of antidumping duties prior to liquidation of the relevant entries during this review period. Failure to comply with this requirement could result in Commerce's presumption that reimbursement of antidumping duties occurred and the subsequent assessment of doubled antidumping duties.

Notification Regarding Administrative Protection Order

This notice also serves as the only reminder to parties subject to administrative protective order (APO) of their responsibility concerning the disposition of proprietary information disclosed under APO in accordance with 19 CFR 351.305(a)(3). Timely written notification of the return of destruction of APO materials or conversion to judicial protective order is hereby requested. Failure to comply with the regulations and the terms of an APO is a sanctionable violation.

Notification to Interested Parties

This notice is issued and published in accordance with sections 751(a) and 777(i) of the Act, and 19 CFR 351.213(h).

Dated: March 22, 2021.

Christian Marsh,

Acting Assistant Secretary for Enforcement and Compliance.

[FR Doc. 2021–06296 Filed 3–25–21; 8:45 am]

BILLING CODE 3510–DS–P

[2] *Id.*

[3] *See Non-Market Economy Antidumping Proceedings: Assessment of Antidumping Duties,* 76 FR 65694, 65695 (October 24, 2011); *see also Certain Corrosion-Resistant Steel Products from the People's Republic of China: Final Determination of Sales at Less Than Fair Value, and Final Affirmative Critical Circumstances Determination, in Part,* 81 FR 35316 (June 2, 2016).

DEPARTMENT OF COMMERCE

International Trade Administration

[A–570–067]

Forged Steel Fittings From the People's Republic of China: Preliminary Results of Antidumping Duty Administrative Review and Preliminary Determination of No Shipments; 2018–2019

AGENCY: Enforcement and Compliance, International Trade Administration, Department of Commerce.

SUMMARY: The Department of Commerce (Commerce) preliminarily determines that Both-Well (Taizhou) Steel Fittings Co., Ltd., an exporter of forged steel fittings from the People's Republic of China (China), did not sell subject merchandise in the United States at prices below normal value (NV) during the period of review (POR) May 17, 2018, through October 31, 2019. We also preliminarily find that Ningbo Zhongan Forging Co., Ltd. (Ningbo Zhongan) is not eligible for a separate rate and is, therefore, part of the China-wide entity. Interested parties are invited to comment on these preliminary results.

DATES: Applicable March 26, 2021.

FOR FURTHER INFORMATION CONTACT: Jinny Ahn, AD/CVD Operations, Office VIII, Enforcement and Compliance, International Trade Administration, Department of Commerce, 1401 Constitution Avenue NW, Washington, DC 20230; telephone: (202) 482–0339.

SUPPLEMENTARY INFORMATION:

Background

This administrative review is being conducted in accordance with section 751(a) of the Tariff Act of 1930, as amended (the Act). On January 17, 2020, Commerce published the notice of initiation of this administrative review, covering 26 companies.[1] On February 13, 2020, Commerce selected as mandatory respondents Both-Well (Taizhou) Steel Fittings Co., Ltd. (Both-Well) and Ningbo Zhongan Forging Co., Ltd. (Ningbo Zhongan), the two companies accounting for the largest volume of U.S. entries of subject merchandise into the United States as reported by U.S. Customs and Border Protection (CBP).[2] On February 18, 2020, Commerce issued the non-market economy (NME) antidumping duty (AD) questionnaire to Both-Well and Ningbo Zhongan. On March 4, 2020, Ningbo Zhongan notified Commerce that it did not intend to respond to the NME AD questionnaire.[3]

[1] *See Initiation of Antidumping and Countervailing Duty Administrative Reviews,* 85 FR 3014 (January 17, 2020) (*Initiation Notice*). We note that the *Initiation Notice* identifies 27 companies initiated for review, but for purposes of respondent selection, we considered two of the initiated companies as the same company: Both-Well (Taizhou) Steel Fittings Co., Ltd. and Both-Well Taizhou Steel Fittings Co., Ltd. *See* Memorandum, ''Antidumping Duty Administrative Review of Forged Steel Fittings from the People's Republic of China: Selection of Respondents for Individual Examination,'' dated February 13, 2020 (Respondent Selection Memo).

[2] *See* Respondent Selection Memo.

[3] *See* Ningbo Zhongan's Letter, ''Ningbo Zhongan Notice of No Intent to Respond to Questionnaire for Administrative Review of the Antidumping Duty Order on Forged Steel Fittings from the People's Republic of China,'' dated March 4, 2020.

On April 24, 2020, Commerce tolled all deadlines in administrative reviews by 50 days.[4] On July 21, 2020, Commerce tolled all deadlines in administrative reviews by an additional 60 days.[5] On November 3, 2020, Commerce extended the preliminary results deadline by 60 days.[6] On January 4, 2021, Commerce extended the preliminary results deadline by an additional 60 days until March 19, 2021. For a complete description of the events that followed the initiation of this administrative review, *see* the Preliminary Decision Memorandum.[7]

Scope of the Order [8]

The merchandise covered by the *Order* is carbon and alloy forged steel fittings, whether unfinished (commonly known as blanks or rough forgings) or finished. Subject carbon and alloy forged steel fittings are normally entered under Harmonized Tariff Schedule of the United States (HTSUS) subheadings 7307.99.1000, 7307.99.3000, 7307.99.5045, and 7307.99.5060. They also may be entered under HTSUS subheadings 7307.92.3010, 7307.92.3030, 7307.92.9000, and 7326.19.0010. The HTSUS subheadings and specifications are provided for convenience and customs purposes; the written description of the scope is dispositive. For a complete description of the scope of the *Order, see* the Preliminary Decision Memorandum.

Methodology

Commerce is conducting this review in accordance with section 751(a)(1)(B) of the Act and 19 CFR 351.213. We calculated export prices in accordance with section 772 of the Act. Because China is an NME country within the meaning of section 771(18) of the Act, NV has been calculated in accordance with section 773(c) of the Act.

For a full description of the methodology underlying our conclusions, *see* the Preliminary Decision Memorandum. A list of the topics included in the Preliminary Decision Memorandum is included in Appendix I to this notice. The Preliminary Decision Memorandum is a public document and is made available to the public via Enforcement and Compliance's Antidumping and Countervailing Duty Centralized Electronic Service System (ACCESS). ACCESS is available to registered users at *https://access.trade.gov.* In addition, a complete version of the Preliminary Decision Memorandum is available at *http://enforcement.trade.gov/frn/.*

Preliminary Determination of No Shipments

Based on our analysis of CBP information and the no-shipment certifications submitted by Dalian Guangming Pipe Fittings Co., Ltd., Jiangsu Forged Pipe Fittings Co., Ltd., Lianfa Stainless Steel Pipes & Valves (Qingyun) Co., Ltd., and Qingdao Bestflow Industrial Co., Ltd., Commerce preliminarily determines that these four companies had no shipments of subject merchandise during the POR. For additional information regarding this determination, *see* the Preliminary Decision Memorandum.

Consistent with our practice, we are not rescinding this review with respect to these companies but, instead, intend to complete the review and issue appropriate instructions to CBP based on the final results of the review.[9]

Separate Rates

Commerce preliminary finds that Ningbo Zhongan has not established its eligibility for a separate rate. Moreover, Commerce preliminarily finds that 14 other companies for which a review was initiated did not establish their eligibility for a separate rate because they failed to provide a separate rate application, a separate rate certification, or a no-shipment certification if they were already eligible for a separate rate.[10] As such, we preliminarily determine that Ningbo Zhongan and these 14 companies are part of the China-wide entity.

Additionally, Commerce preliminarily finds that the information placed on the record by six companies in addition to Both-Well demonstrates that these companies are eligible for a separate rate. These six companies are: Ningbo Long Teng Metal Manufacturing Co., Ltd.; Ningbo Save Technology Co., Ltd.; Q.C. Witness International Co., Ltd.; Xin Yi International Trade Co., Limited; Yingkou Guangming Pipeline Industry Co., Ltd.; and Yuyao Wanlei Pipe Fitting Manufacturing Co., Ltd. For additional information, *see* the Preliminary Decision Memorandum.

Dumping Margin for Non-Individually Examined Companies Granted a Separate Rate

In these preliminary results, because the only participating mandatory respondent (*i.e.,* Both-Well) eligible for a separate rate has received a weighted-average dumping margin of zero percent, we look to section 753(c)(5)(B) of the Act for guidance, which instructs Commerce to use any ''reasonable method'' to determine the rate for exporters that are not being individually examined and found to be entitled to a separate rate. Accordingly, for these preliminary results, we find it appropriate to assign the calculated weighted-average dumping margin of the sole participating mandatory respondent, Both-Well (*i.e.,* zero percent) as the weighted-average dumping margin for the non-selected, separate rate respondents. For additional information, *see* the Preliminary Decision Memorandum.

The China-Wide Entity

Commerce's policy regarding conditional review of the China-wide entity applies to this administrative review.[11] Under this policy, the China-wide entity will not be under review unless a party specifically requests, or Commerce self-initiates, a review of the China-wide entity.[12] Because no party requested a review of the China-wide entity in this review, the China-wide entity is not under review and the China-wide entity's rate (*i.e.,* 142.72 percent) is not subject to change.[13] For additional information, *see* the Preliminary Decision Memorandum.

[4] *See* Memorandum, ''Tolling of Deadlines for Antidumping and Countervailing Duty Administrative Reviews in Response to Operational Adjustments Due to COVID–19,'' dated April 24, 2020.

[5] *See* Memorandum, ''Tolling of Deadlines for Antidumping and Countervailing Duty Administrative Reviews,'' dated July 21, 2020.

[6] *See* Memorandum, ''Forged Steel Fittings from the People's Republic of China: Extension of Deadline for Preliminary Results of the First Antidumping Duty Administrative Review,'' dated November 3, 2020.

[7] *See* Memorandum, ''Decision Memorandum for the Preliminary Results of Antidumping Duty Administrative Review and Preliminary Determination of No Shipments: Forged Steel Fittings from the People's Republic of China; 2018–2019,'' dated concurrently with, and hereby adopted by, this notice (Preliminary Decision Memorandum).

[8] *See Forged Steel Fittings From Italy and the People's Republic of China: Antidumping Duty Orders,* 83 FR 60397, dated November 26, 2018 (*Order*).

[9] *See Non-Market Economy Antidumping Proceedings: Assessment of Antidumping Duties,* 76 FR 65694, 65694–95 (October 24, 2011) (*NME Assessment of Duties*).

[10] *See* Appendix II of this notice which identifies these 14 companies along with Ningbo Zhongan.

[11] *See Antidumping Proceedings: Announcement of Change in Department Practice for Respondent Selection in Antidumping Proceedings and Conditional Review of the Nonmarket Economy Entity in NME Antidumping Duty Proceedings,* 78 FR 65963 (November 4, 2013).

[12] *Id.*

[13] *See Order,* 83 FR at 60397.

Preliminary Results of the Review

Commerce preliminarily determines that the following weighted-average dumping margins exist for the POR:

Exporter	Weighted-average dumping margin (percent)
Both-Well (Taizhou) Steel Fittings Co., Ltd	0.00
Review-Specific Rate Applicable to the Following Companies	
Ningbo Long Teng Metal Manufacturing Co., Ltd	0.00
Ningbo Save Technology Co., Ltd	0.00
Q.C. Witness International Co., Ltd	0.00
Yingkou Guangming Pipeline Industry Co., Ltd	0.00
Yuyao Wanlei Pipe Fitting Manufacturing Co., Ltd	0.00
Xin Yi International Trade Co., Limited	0.00

Disclosure and Public Comment

Commerce intends to disclose the calculations performed for these preliminary results to the parties within five days of the date of publication of this notice in accordance with 19 CFR 351.224(b).

Pursuant to 19 CFR 351.309(c)(ii), interested parties may submit case briefs no later than 30 days after the date of publication of this notice. Parties who submit case briefs or rebuttal briefs in this proceeding are encouraged to submit with each argument: (1) A statement of the issue; (2) a brief summary of the argument; and (3) a table of authorities. Rebuttal briefs, limited to issues raised in the case briefs, may be filed no later than seven days after the case briefs are filed.[14]

Pursuant to 19 CFR 351.310(c), interested parties who wish to request a hearing must submit a written request to the Assistant Secretary for Enforcement and Compliance within 30 days of the date of publication of this notice. Requests should contain: (1) The party's name, address and telephone number; (2) the number of participants; and (3) a list of issues parties intend to discuss. Issues raised in the hearing will be limited to those raised in the respective case and rebuttal briefs.[15] If a request for a hearing is made, Commerce will announce the date and time of the hearing.

All submissions to Commerce must be filed electronically using Enforcement and Compliance's electronic records system, ACCESS,[16] and must also be served on interested parties.[17] An electronically filed document must be received successfully in its entirety by ACCESS, by 5 p.m. Eastern Time (ET) on the date that the document is due. Note that Commerce has temporarily modified certain of its requirements for serving documents containing business proprietary information, until further notice.[18]

Unless otherwise extended, Commerce intends to issue the final results of this administrative review, which will include the results of its analysis of issues raised in any briefs, within 120 days of publication of these preliminary results, pursuant to section 751(a)(3)(A) of the Act.

Assessment Rates

In accordance with section 751(a)(2)(C) of the Act, the final results of this review shall be the basis for the assessment of antidumping duties on entries of merchandise covered by this review. Upon issuance of the final results, Commerce will determine, and CBP shall assess, antidumping duties on all appropriate entries covered by this review.[19] Commerce intends to issue assessment instructions to CBP no earlier than 35 days after the date of publication of the final results of this review. If a timely summons is filed at the U.S. Court of International Trade, the assessment instructions will direct CBP not to liquidate relevant entries until the time for parties to file a request for a statutory injunction has expired (*i.e.,* within 90 days of publication).

We will instruct CBP to assess antidumping duties on all appropriate entries covered by this review when the company-specific weighted-average dumping margin is not zero or *de minimis,* and, for Both-Well, when the importer-specific assessment rate calculated in the final results of this review is not zero or *de minimis* (*i.e.,* less than 0.50 percent). Where either a company's weighted-average dumping margin is zero or *de minimis,* or an importer-specific assessment rate is zero or *de minimis,*[20] we will instruct CBP to liquidate the appropriate entries without regard to antidumping duties. If Both-Well's weighted-average dumping margin is not zero or *de minimis* in the final results of this review, Commerce will instruct CBP to collect the appropriate duties at the time of liquidation, in accordance with 19 CFR 351.212(b)(1).[21]

We intend to instruct CBP to take into account the ''provisional measures deposit cap,'' in accordance with 19 CFR 351.212(d).

For the respondents that were not selected for individual examination in this administrative review but qualified for a separate rate, the assessment rate will be equal to the weighted-average dumping margin assigned to Both-Well in the final results of this review.

For the final results, if we continue to find that Ningbo Zhongan and the 14 companies, identified in Appendix II, are ineligible for a separate rate and are, therefore, considered part of the China-wide entity, we will instruct CBP to apply an assessment rate of 147.72 percent (the China-wide entity rate) to all entries of subject merchandise during the POR which were exported by those companies.

[14] *See* 19 CFR 351.309(d).

[15] *See* 19 CFR 351.310(c).

[16] *See* 19 CFR 351.303.

[17] *See* 19 CFR 351.303(f).

[18] *See Temporary Rule Modifying AD/CVD Service Requirements Due to COVID–19,* 85 FR 41363 (July 10, 2020).

[19] *See* 19 CFR 351.212(b)(1).

[20] *See* 19 CFR 351.106(c)(2).

[21] Commerce will apply the assessment rate calculation method adopted in *Antidumping Proceedings: Calculation of the Weighted-Average Dumping Margin and Assessment Rate in Certain Antidumping Proceedings: Final Modification,* 77 FR 8101 (February 14, 2012).

For entries that were not reported in the U.S. sales data submitted by Both-Well during this review, Commerce will instruct CBP to liquidate such entries at the rate for the China-wide entity.[22] Additionally, if Commerce determines that an exporter under review had no shipments of the subject merchandise, any suspended entries that entered under that exporter's case number (*i.e.,* at that exporter's cash deposit rate) will be liquidated at the rate for the China-wide entity.

Cash Deposit Requirements

The following cash deposit requirements will be effective upon publication of the final results of this administrative review for shipments of the subject merchandise from China entered, or withdrawn from warehouse, for consumption on or after the publication date, as provided by section 751(a)(2)(C) of the Act: (1) For each company listed in the final results of this review, the cash deposit rate will be equal to the weighted-average dumping margin established in the final results of this review (except, if the rate is *de minimis,* then the cash deposit rate will be zero); (2) for previously examined Chinese and non-Chinese exporters not listed above that received a separate rate in a prior completed segment of this proceeding, the cash deposit rate will continue to be the existing exporter-specific cash deposit rate; (3) for all Chinese exporters of subject merchandise that have not been found to be entitled to a separate rate, the cash deposit rate will be the rate for the China-wide entity (*i.e.,* 147.72 percent); and (4) for all non-Chinese exporters of subject merchandise which have not received their own separate rate, the cash deposit rate will be the rate applicable to the Chinese exporter that supplied that non-Chinese exporter.

These cash deposit requirements, when imposed, shall remain in effect until further notice.

Notification to Importers

This notice also serves as a preliminary reminder to importers of their responsibility under 19 CFR 351.402(f)(2) to file a certificate regarding the reimbursement of antidumping duties prior to liquidation of the relevant entries during this POR. Failure to comply with this requirement could result in Commerce's presumption that reimbursement of antidumping duties occurred and the subsequent assessment of double antidumping duties.

[22] *See NME Assessment of Duties,* 76 FR, at 65694–65695, for a full discussion of this practice.

Notification to Interested Parties

This administrative review and notice are issued and published in accordance with sections 751(a)(1) and 777(i)(1) of the Act, 19 CFR 351.213, and 19 CFR 351.221(b)(4).

Dated: March 19, 2021.

Christian Marsh,

Acting Assistant Secretary for Enforcement and Compliance.

Appendix I

List of Topics Discussed in the Preliminary Decision Memorandum

I. Summary
II. Background
III. Scope of the Order
IV. Discussion of the Methodology
V. Date of Sale
VI. Comparisons to Normal Value
VII. U.S. Price
VIII. Normal Value
IX. Currency Conversion
X. Adjustment Under Section 777A(f) of the Act
XI. Recommendation

Appendix II

Companies Preliminarily Not Eligible for a Separate Rate and Treated as Part of China-Wide Entity

1. Cixi Baicheng Hardware Tools, Ltd.
2. Eaton Hydraulics (Luzhou) Co., Ltd.
3. Eaton Hydraulics (Ningbo) Co., Ltd.
4. Jiangsu Haida Pipe Fittings Group Co.
5. Jinan Mech Piping Technology Co., Ltd.
6. Jining Dingguan Precision Parts Manufacturing Co., Ltd.
7. Luzhou City Chengrun Mechanics Co., Ltd.
8. Ningbo HongTe Industrial Co., Ltd.
9. Ningbo Zhongan Forging Co., Ltd.
10. Shanghai Lon Au Stainless Steel Materials Co., Ltd.
11. Witness International Co., Ltd.
12. Yancheng Boyue Tube Co., Ltd.
13. Yancheng Haohui Pipe Fittings Co., Ltd.
14. Yancheng Jiuwei Pipe Fittings Co., Ltd.
15. Yancheng Manda Pipe Industry Co., Ltd

[FR Doc. 2021–06298 Filed 3–25–21; 8:45 am]

BILLING CODE 3510–DS–P

DEPARTMENT OF COMMERCE

International Trade Administration

[A–570–985]

Xanthan Gum From the People's Republic of China: Final Results of Antidumping Duty Administrative Review; 2018–2019

AGENCY: Enforcement and Compliance, International Trade Administration, Department of Commerce.

SUMMARY: The Department of Commerce (Commerce) determines that Meihua Group International Trading (Hong Kong) Limited, Langfang Meihua Biotechnology Co., Ltd., and Xinjiang Meihua Amino Acid Co., Ltd. (collectively, Meihua) did not make sales of subject merchandise below normal value during the period of review (POR) July 1, 2018, through June 30, 2019.

DATES: Applicable March 26, 2021.

FOR FURTHER INFORMATION CONTACT: Abdul Alnoor or Aleks Nakutis, AD/CVD Operations, Office IV, Enforcement and Compliance, International Trade Administration, U.S. Department of Commerce, 1401 Constitution Avenue NW, Washington, DC 20230; telephone: (202) 482–4554 or (202) 482–3147, respectively.

SUPPLEMENTARY INFORMATION:

Background

After Commerce published the *Preliminary Results* on November 23, 2020,[1] interested parties commented on those results. For details regarding the events that occurred subsequent to the *Preliminary Results, see* the Issues and Decision Memorandum.[2] Commerce conducted this administrative review in accordance with section 751 of the Tariff Act of 1930, as amended (the Act).

Scope of the Order

The scope of the order covers dry xanthan gum, whether or not coated or blended with other products. Further, xanthan gum is included in this order regardless of physical form, including, but not limited to, solutions, slurries, dry powders of any particle size, or unground fiber. Merchandise covered by the scope of this order is classified in the Harmonized Tariff Schedule of the United States at subheading 3913.90.20. Although this tariff classification is provided for convenience and customs purposes, the written description of the scope is dispositive.[3]

Analysis of Comments Received

We addressed all issues raised in the case and rebuttal briefs submitted by parties in this review in the Issues and Decision Memorandum. A list of the issues addressed in the Issues and Decision Memorandum is provided in the appendix to this notice. The Issues and Decision Memorandum is a public

[1] *See Xanthan Gum from the People's Republic of China: Preliminary Results of the Antidumping Duty Administrative Review, and Partial Rescission; 2018–2019,* 85 FR 74686 (November 23, 2020) (*Preliminary Results*), and accompanying Preliminary Decision Memorandum.

[2] *See* Memorandum, ''Issue and Decision Memorandum for the Final Results of the Antidumping Duty Administrative Review: Xanthan Gum from the People's Republic of China; 2018–2019,'' dated concurrently with, and hereby adopted by, this notice (Issues and Decision Memorandum).

[3] For the full text of the scope of the order, *see* Issues and Decision Memorandum.

document and is on file electronically via Enforcement and Compliance's Antidumping and Countervailing Duty Centralized Electronic Service System (ACCESS). ACCESS is available to registered users at *http://access.trade.gov.* In addition, a complete version of the Issues and Decision Memorandum can be accessed directly on the internet at *http://enforcement.trade.gov/frn/.*

Changes Since the Preliminary Results

Other than revising certain customer/importer names in the liquidation instructions for Meihua, we made no changes since the *Preliminary Results.*

Separate Rates

In the *Preliminary Results,* Commerce found that Meihua and CP Kelco (Shandong) Biological Company Limited (CP Kelco (Shandong)) demonstrated their eligibility for a separate rate.[4] No parties commented on, nor did we receive information that contradicts, this preliminary determination. Thus, for the final results of review, we continued to grant Meihua and CP Kelco (Shandong) separate rate status.

Dumping Margin for Non-Individually Examined Respondents Granted Separate Rate Status

The statute and Commerce's regulations do not address the rate to apply to respondents not selected for individual examination when Commerce limits its examination in an administrative review pursuant to section 777A(c)(2) of the Act. Generally, Commerce looks to section 735(c)(5) of the Act, which provides instructions for calculating the all-others rate in an investigation, for guidance when calculating the rate for non-selected respondents that are not individually examined in an administrative review. Section 735(c)(5)(A) of the Act states that the all-others rate should be calculated by averaging the weighted-average dumping margins determined for individually-examined respondents, excluding dumping margins that are zero, *de minimis,* or based entirely on facts available. When the dumping margins for individually examined companies are all zero, *de minimis,* or based entirely on facts available, section 735(c)(5)(B) of the Act provides that Commerce may use ''any reasonable method'' to establish the all others rate. Consistent with the *Preliminary Results,* because the dumping margin for the sole mandatory respondent, Meihua, is zero percent, we assigned a zero percent dumping margin to CP Kelco (Shandong).

Final Results of Administrative Review

We are assigning the following dumping margins to the firms listed below for the period July 1, 2018, through June 30, 2019:

Exporter	Weighted-average dumping margin (percent)
Meihua Group International Trading (Hong Kong) Limited/Langfang Meihua Biotechnology Co., Ltd./Xinjiang Meihua Amino Acid Co., Ltd	0.00
Review-Specific Rate Applicable to the Following Company	
CP Kelco (Shandong) Biological Company Limited	0.00

We intend to disclose to parties the calculations performed in this review within five days of the date of publication of this notice, in accordance with 19 CFR 351.224(b).

Assessment Rates

Pursuant to section 751(a)(2)(A) of the Act and 19 CFR 351.212(b), Commerce has determined, and U.S. Customs and Border Protection (CBP) shall assess, antidumping duties on all appropriate entries of subject merchandise in accordance with the final results of this review. Consistent with its recent notice,[5] Commerce intends to issue assessment instructions to CBP no earlier than 35 days after the date of publication of the final results of this review in the **Federal Register**. If a timely summons is filed at the U.S. Court of International Trade, the assessment instructions will direct CBP not to liquidate relevant entries until the time for parties to file a request for a statutory injunction has expired (*i.e.,* within 90 days of publication). Because the dumping margins for Meihua and CP Kelco (Shandong) are zero, Commerce will instruct CBP to liquidate the appropriate entries without regard to antidumping duties.[6]

For entries that were not reported in Meihua's U.S. sales database, but the entries were made under Meihua's case number (*i.e.,* entered at Meihua's cash deposit rate), Commerce will instruct CBP to liquidate such entries at the China-wide rate (*i.e.,* 154.07 percent) (*see* ''China-Wide Entity'' section below).

China-Wide Entity

Commerce's policy regarding the conditional review of the China-wide entity applies to this administrative review.[7] Under this policy, the China-wide entity will not be under review unless a party specifically requests, or Commerce self-initiates, a review of the entity. Because no party requested a review of the China-wide entity, we did not review the entity in this segment of the proceeding. Thus, the China-wide entity's rate (*i.e.,* 154.07 percent) did not change.

Cash Deposit Requirements

The following cash deposit requirements will be effective for shipments of the subject merchandise entered, or withdrawn from warehouse, for consumption on or after the publication date of this notice in the **Federal Register**, as provided for by section 751(a)(2)(C) of the Act: (1) For the exporters listed in the table above, the cash deposit rate will be the rate listed for the exporter in the table; (2) For previously investigated or reviewed China and non-China exporters not listed in the table above that have separate rates, the cash deposit rate will continue to be the existing exporter-specific rate published for the most

[4] *See Preliminary Results,* 85 FR at 74686.

[5] *See Notice of Discontinuation of Policy to Issue Liquidation Instructions After 15 Days in Applicable Antidumping and Countervailing Duty Administrative Proceedings,* 86 FR 3995 (January 15, 2021).

[6] *See Antidumping Proceedings: Calculation of the Weighted-Average Dumping Margin and Assessment Rate in Certain Antidumping Proceedings: Final Modification,* 77 FR 8101, 8103 (February 14, 2012).

[7] *See Antidumping Proceedings: Announcement of Change in Department Practice for Respondent Selection in Antidumping Duty Proceedings and Conditional Review of the Nonmarket Economy Entity in NME Antidumping Duty Proceedings,* 78 FR 65963 (November 4, 2013).

recent period; (3) for all China exporters of subject merchandise that have not been found to be entitled to a separate rate, the cash deposit rate will be the rate previously established for the China-wide entity, which is 154.07 percent; and (4) for all non-China exporters of subject merchandise which have not received their own rate, the cash deposit rate will be the rate applicable to the China exporter that supplied that non-China exporter. These cash deposit requirements, when imposed, shall remain in effect until further notice.

Notification to Importers Regarding the Reimbursement of Duties

This notice also serves as a final reminder to importers of their responsibility under 19 CFR 351.402(f) to file a certificate regarding the reimbursement of antidumping duties prior to liquidation of the relevant entries during this POR. Failure to comply with this requirement could result in Commerce's presumption that reimbursement of antidumping duties occurred and the subsequent assessment of double antidumping duties.

Notification Regarding Administrative Protective Order (APO)

This notice also serves as a reminder to parties subject to APO of their responsibility concerning the return or destruction of proprietary information disclosed under APO in accordance with 19 CFR 351.305, which continues to govern business proprietary information in this segment of the proceeding. Timely written notification of the return or destruction of APO materials, or conversion to judicial protective order, is hereby requested. Failure to comply with the regulations and terms of an APO is a violation which is subject to sanction.

Notification to Interested Parties

We are issuing these final results of administrative review and publishing this notice in accordance with sections 751(a)(1) and 777(i) of the Act.

Dated: March 22, 2021.

Christian Marsh,

Acting Assistant Secretary for Enforcement and Compliance.

Appendix

List of Sections in the Issues and Decision Memorandum

I. Summary
II. Background
III. Scope of the Order
IV. Discussion of Issues
Comment 1: Whether Commerce Should Have Granted C.P. Kelco Voluntary Respondent Status
Comment 2: Whether Commerce Should Revise its Draft Liquidation Instructions
Comment 3: Whether Commerce Should Continue to Deduct Section 301 Duties from U.S. Sales Prices
V. Recommendation

[FR Doc. 2021–06323 Filed 3–25–21; 8:45 am]

BILLING CODE 3510–DS–P

DEPARTMENT OF COMMERCE

International Trade Administration

[A–523–810]

Polyethylene Terephthalate Resin From the Sultanate of Oman: Rescission of 2019–2020 Antidumping Duty Administrative Review

AGENCY: Enforcement and Compliance, International Trade Administration, Department of Commerce.

SUMMARY: The Department of Commerce (Commerce) is rescinding the administrative review of the antidumping duty order on polyethylene terephthalate resin (PET resin) from the Sultanate of Oman (Oman) covering the period May 1, 2019, through April 30, 2020 (POR), based on the timely withdrawal of the sole request for review.

DATES: Applicable March 26, 2021.

FOR FURTHER INFORMATION CONTACT: Jonathan Hill, AD/CVD Operations, Office IV, Enforcement and Compliance, International Trade Administration, U.S. Department of Commerce, 1401 Constitution Avenue NW, Washington, DC 20230; telephone: (202) 482–3518.

SUPPLEMENTARY INFORMATION:

Background

On May 1, 2020, Commerce published a notice in the **Federal Register** in which it announced the opportunity for interested parties to request an administrative review of the order covering the POR.[1] In accordance with section 751(a)(1) of the Tariff Act of 1930, as amended (the Act), and 19 CFR 351.213(b), on May 29, 2020, OCTAL SAOC—FZC (OCTAL) requested a review of the order with respect to itself.[2] On July 10, 2020, in accordance with section 751(a) of the Act and 19 CFR 351.221(c)(1)(i), Commerce initiated an administrative review of the order with respect to OCTAL.[3] On August 14, 2020, OCTAL timely withdrew its review request.[4]

Rescission of Review

Pursuant to 19 CFR 351.213(d)(1), Commerce will rescind an administrative review, in whole or in part, if the parties that requested the review withdraw their requests within 90 days of the publication date of the notice of initiation of the requested review. OCTAL withdrew its request for a review within the 90-day deadline. Because Commerce did not receive any other requests to review the order for the period May 1, 2019, through April 30, 2020, we are rescinding this administrative review in its entirety, in accordance with 19 CFR 351.213(d)(1).

Assessment

Commerce will instruct U.S. Customs and Border Protection (CBP) to assess antidumping duties on all appropriate entries of PET resin from Oman during the period May 1, 2019, through April 30, 2020, at rates equal to the cash deposit rates for estimated antidumping duties that were required at the time of entry, or withdrawal from warehouse, for consumption, in accordance with 19 CFR 351.212(c)(1)(i). Commerce intends to issue assessment instructions to CBP no earlier than 35 days after the date of publication of this rescission notice in the **Federal Register**.

Notification to Importers

This notice serves as the only reminder to importers of their responsibility under 19 CFR 351.402(f)(2) to file a certificate regarding the reimbursement of antidumping duties prior to liquidation of the relevant entries during this review period. Failure to comply with this requirement could result in the presumption that reimbursement of antidumping duties occurred and the subsequent assessment of doubled antidumping duties.

Notification Regarding Administrative Protective Order

This notice also serves as the only reminder to parties subject to administrative protective orders (APO) of their responsibility concerning the disposition of proprietary information disclosed under APO in accordance with 19 CFR 351.305(a)(3), which continues to govern business proprietary information in this segment of the proceeding. Timely written notification of the return or destruction

[1] *See Antidumping or Countervailing Duty Order, Finding, or Suspended Investigation; Opportunity to Request Administrative Review,* 85 FR 25394 (May 1, 2020).

[2] *See* OCTAL's Letter ''OCTAL's Request for AD Administrative Review,'' dated May 29, 2020.

[3] *See Initiation of Antidumping and Countervailing Duty Administrative Reviews,* 85 FR 41540 (July 10, 2020).

[4] *See* OCTAL's letter ''*OCTAL's Withdrawal of Request for AD Review Certain Polyethylene Terephthalate (PET) Resin from the Sultanate of Oman,*'' dated August 14, 2020.

of APO materials or conversion to judicial protective order is hereby requested. Failure to comply with the regulations and the terms of an APO is a sanctionable violation.

This notice is issued and published in accordance with sections 751(a)(1) and 777(i)(1) of the Act and 19 CFR 351.213(d)(4).

Dated: March 18, 2021.

James Maeder,

Deputy Assistant Secretary for Antidumping and Countervailing Duty Operations.

[FR Doc. 2021–06299 Filed 3–25–21; 8:45 am]

BILLING CODE 3510–DS–P

DEPARTMENT OF COMMERCE

National Oceanic and Atmospheric Administration

[RTID XA971]

New England Fishery Management Council; Public Meeting

AGENCY: National Marine Fisheries Service (NMFS), National Oceanic and Atmospheric Administration (NOAA), Commerce.

ACTION: Notice of public meeting.

SUMMARY: The New England Fishery Management Council (Council, NEFMC) will hold a three-day meeting to consider actions affecting New England fisheries in the exclusive economic zone (EEZ). Due to federal and state travel restrictions and updated guidance from the Centers for Disease Control and Prevention related to COVID–19, this meeting will be conducted entirely by webinar.

DATES: The webinar meeting will be held on Tuesday, Wednesday, and Thursday, April 13–15, 2021, beginning at 12 p.m. on April 13 and 9 a.m. on April 14 and April 15.

ADDRESSES: All meeting participants and interested parties can register to join the webinar at *https://register.gotowebinar.com/register/1904697600653229067.*

Council address: New England Fishery Management Council, 50 Water Street, Mill 2, Newburyport, MA 01950; telephone (978) 465–0492; *www.nefmc.org.*

FOR FURTHER INFORMATION CONTACT: Thomas A. Nies, Executive Director, New England Fishery Management Council; telephone: (978) 465–0492, ext. 113.

SUPPLEMENTARY INFORMATION:

Agenda

Tuesday, April 13, 2021

After introductions and brief announcements, the Council will receive reports on recent activities from its Chairman and Executive Director, NMFS's Greater Atlantic Regional Fisheries Office (GARFO) Regional Administrator, the Northeast Fisheries Science Center (NEFSC) Director, the Mid-Atlantic Fishery Management Council liaison, staff from the Atlantic States Marine Fisheries Commission (ASMFC), and representatives from NOAA General Counsel, NOAA's Office of Law Enforcement, the U.S. Coast Guard, and the South Atlantic Council's Dolphin/Wahoo Committee. Next, the Northeast Fisheries Science Center will provide an overview of its efforts to address climate change impacts on fisheries. This briefing will be followed by a progress report on the Northeast Region Coordinating Council's scenario planning initiative to address climate change impacts and implications. At 3:00 p.m., NMFS will hold a listening session on Executive Order 14008, Tackling the Climate Crisis at Home and Abroad, focusing on Section 216(c), which is specific to making fisheries and protected resources more resilient to climate change. The Council and public will have the opportunity to provide recommendations and comments directly to NMFS, which is also known as NOAA Fisheries. As the final order of business for the day, the Council will receive an update on congressional activities.

Wednesday, April 14, 2021

The Council will begin the day with a progress report from its Atlantic Herring Committee. The Council will discuss next steps on actions to: (1) Develop a rebuilding plan to address the overfished status of the Atlantic herring resource; (2) potentially adjust herring accountability measures; and (3) consider spawning closures on Georges Bank under Framework Adjustment 7. Next, the Council will hear from its Skate Committee, which first will provide a summary of comments received during the recent supplemental scoping period for Amendment 5 to the Northeast Skate Complex Fishery Management Plan. The amendment considers establishing limited access in the skate wing and/or bait fisheries and other measures to address several issues in the fishery. The Council will discuss next steps for this action and also receive an update on other 2021 skate priorities.

Following the lunch break, the Council will hear from its Habitat Committee on three items. First, the Council will receive a progress report on work being done to assess possible revisions to the Habitat Management Area on the Northern Edge of Georges Bank. Second, the Council will discuss and provide feedback to the Habitat Committee on a strategy for ongoing engagement and coordination with NOAA Fisheries on aquaculture issues. Third, the Council will receive an update on offshore wind developments in the Greater Atlantic Region.

Following the habitat discussion, the Greater Atlantic Regional Fisheries Office will provide a short progress report on the status of the 2021 Atlantic Sea Scallop Biological Opinion to address turtle interactions in the scallop fishery. Also related to scallops, the Council will receive updates on: (1) The formation of the new Scallop Survey Working Group and its recent activities; and (2) other 2021 Council scallop priorities. The Council will close out the day with a report on and discussion of the Northeast Trawl Advisory Panel's March 19, 2021 meeting.

Thursday, April 15, 2021

The Council will begin the third day of its meeting with a presentation on the NEFSC's State of the Ecosystem 2021 Report for New England. Next, the Council will hear the Scientific and Statistical Committee's recommendations on the State of the Ecosystem 2021 Report and have an opportunity to ask questions and discuss the report's contents. After that, the Ecosystem-Based Fishery Management (EBFM) Management Strategy Evaluation (MSE) Steering Committee will provide an update on its EBFM public information workshop planning efforts. Following this update, members of the public will have the opportunity to speak during an open comment period on issues that relate to Council business but are not included on the published agenda for this meeting. The Council asks the public to limit remarks to 3–5 minutes. These comments will be received through the webinar. A guide for how to publicly comment through the webinar is available on the Council website at *https://s3.amazonaws.com/nefmc.org/NEFMC-meeting-remote-participation_generic.pdf.* Next, the Council will go into its Groundfish Report, which will focus on next steps in response to public feedback received on a recreational groundfish party/charter fishery limited entry strawman. The Council then will close out the meeting with other business.

Although non-emergency issues not contained on this agenda may come

before the Council for discussion, those issues may not be the subject of formal action during this meeting. Council action will be restricted to those issues specifically listed in this notice and any issues arising after publication of this notice that require emergency action under section 305(c) of the Magnuson-Stevens Fishery Conservation and Management Act, provided the public has been notified of the Council's intent to take final action to address the emergency. The public also should be aware that the meeting will be recorded. Consistent with 16 U.S.C. 1852, a copy of the recording is available upon request.

Special Accommodations

This meeting is being conducted entirely by webinar. Requests for auxiliary aids should be directed to Thomas A. Nies (see **ADDRESSES**) at least 5 days prior to the meeting date.

Authority: 16 U.S.C. 1801 *et seq.*

Dated: March 23, 2021.

Tracey L. Thompson,

Acting Deputy Director, Office of Sustainable Fisheries, National Marine Fisheries Service.

[FR Doc. 2021–06314 Filed 3–25–21; 8:45 am]

BILLING CODE 3510–22–P

DEPARTMENT OF COMMERCE

National Oceanic and Atmospheric Administration

[RTID 0648–XA931]

Gulf of Mexico Fishery Management Council; Public Meetings

AGENCY: National Marine Fisheries Service (NMFS), National Oceanic and Atmospheric Administration (NOAA), Commerce.

ACTION: Notice of a public meeting.

SUMMARY: The Gulf of Mexico Fishery Management Council (Council) will hold a four-day webinar meeting to consider actions affecting the Gulf of Mexico fisheries in the exclusive economic zone (EEZ).

DATES: The webinar will convene Monday, April 12, 2021 through Wednesday, April 14, 2021, from 9 a.m. until 5:30 p.m. EDT. On Thursday, April 15, 2021, the meeting will convene at 9 a.m. until 4:30 p.m. EDT.

ADDRESSES: The meeting will take place via webinar; you may access the log-on information at *www.gulfcouncil.org.*

Council address: Gulf of Mexico Fishery Management Council, 4107 W Spruce Street, Suite 200, Tampa, FL 33607; telephone: (813) 348–1630.

FOR FURTHER INFORMATION CONTACT: Dr. Carrie Simmons, Executive Director, Gulf of Mexico Fishery Management Council; telephone: (813) 348–1630.

SUPPLEMENTARY INFORMATION:

Agenda

Monday, April 12, 2021; 9 a.m.–5:30 p.m.

The meeting will begin in a *Full Council—Closed Session* to discuss the selection of Reef Fish Advisory Panel Members; selection of Shrimp Advisory Panel Members; and selection of the 2020 Law Enforcement Officer/Team of the Year.

Committee sessions, open to the public will begin approximately 10:15 a.m. with Shrimp Committee reviewing the Biological Review of the Texas Closure, Gulf Shrimp Fishery Effort and Landings, 2019 Royal Red Shrimp Index, an update on Effort Data Collection; and, discuss any remaining Summary items from the Shrimp Advisory Panel Meeting.

Following lunch, the Mackerel Committee will receive an update on Coastal Migratory Pelagics Landings; review Amendment 32: Modifications to the Gulf of Mexico Migratory Group Cobia Catch Limits, Possession Limits, Size Limits, and Framework Procedure and South Atlantic Recommendations, the remaining Coastal Migratory Pelagics AP Recommendations; and, discuss individual fishing quota for the Gulf King Mackerel Commercial Southern Gillnet Zone.

The Data Collection Committee will review the AP Recommendations for Proposed Commercial e-logbook Requirements; receive an update on Southeast For-hire Electronic Reporting (SEFHIER) Program; and, a presentation on Methodology Used for Red Snapper Recreational and Commercial Discards Used in Stock Assessments and Annual Catch Level Monitoring.

Tuesday, April 13, 2021; 9 a.m.–5:30 p.m.

Reef Fish Committee will receive a presentation on 2020 Recreational Landings Imputation; review Reef Fish Landings and the Great Red Snapper Count (GRSC) Project and SSC Recommendations. The Committee will review Final Action items: Framework Action: Modify Gulf of Mexico Red Snapper Catch Limits and SSC review of the Red Snapper Catch analysis and Framework Action: Modify Gulf of Mexico Red Snapper Recreational Data Calibration and Recreational Catch Limits. The Committee will review the revised Public Hearing Draft Amendment 53: Red Grouper Allocations and Annual Catch Levels and Targets; and, review and discuss remaining items from January 2021 Statistical and Scientific Committee (SSC); February 2021 Reef Fish Advisory Panel (AP) Summary Reports; and the implementation of the DESCEND Act of 2020.

The Gulf of Mexico Fishery Management Council and National Oceanic and Atmospheric Administration/National Marine Fisheries Service (NOAA/NMFS) will hold an informal Question and Answer session immediately following the Reef Fish Committee.

Wednesday, April 14, 2021; 9 a.m.–5:30 p.m.

The Habitat Protection and Restoration Committee will receive a presentation and outline on Generic Essential Fish Habitat (EFH) Amendment; receive an overview of E.O. 14008 Sec 216c: Conserving Our Nations Lands and Waters.

The Full Council will reconvene approximately 11:15 a.m. with a Call to Order, Announcements and Introductions; and Announcement of the 2020 Officer of the Year/Team of the Year Award. The Council will continue with Adoption of Agenda, Approval of Minutes; and receive a presentation on Exploring Unexplained Variability in Stock-Recruitment Relationship Estimates for the Gulf of Mexico's Greater Amberjack (Seriola dumerili).

Following lunch, the Council will receive a presentation on recommendations to the Gulf of Mexico Fishery Management Council: Coordinating data and approaches to conduct a Kemp's ridley sea turtle stock assessment.

The Council will hold public testimony 2 p.m.–5:30 p.m., EDT for comments on Final Action items: Framework Action: Modify Gulf of Mexico Red Snapper Catch Limits and Framework Action: Gulf of Mexico Red Snapper Recreational Data Calibration and Recreational Catch Limits; comments on E.O. 14008 Sec 216c: Conserving Our Nations Lands and Waters; and, open testimony on other fishery issues or concerns. Public comment may begin earlier than 2 p.m. EDT, but will not conclude before that time. Persons wishing to give public testimony must follow the instructions on the Council website before the start of the public comment period at 2 p.m. EDT.

Thursday, April 15, 2021; 8:30 a.m.–4:30 p.m.

The Council will receive committee reports from Shrimp, Mackerel, Data

Collection, Habitat Protection and Restoration, and Reef Fish Committees.

The Council will receive updates from the following supporting agencies: South Atlantic Fishery Management Council; NOAA Office of Law Enforcement (OLE); Mississippi Law Enforcement Efforts; Gulf States Marine Fisheries Commission; U.S. Coast Guard; U.S. Fish and Wildlife Service; and Department of State.

Finally, the Council will discuss Other Business items; USDA Dietary Guidelines from Department of Health and Human Services and Background Information on Other Executive Orders from NMFS headquarters.

—Meeting Adjourns

The meeting will be broadcast via webinar. You may register for the webinar by visiting *www.gulfcouncil.org* and clicking on the Council meeting on the calendar.

The timing and order in which agenda items are addressed may change as required to effectively address the issue, and the latest version along with other meeting materials will be posted on the website as they become available.

Although other non-emergency issues not contained in this agenda may come before this group for discussion, in accordance with the Magnuson-Stevens Fishery Conservation and Management Act (Magnuson-Stevens Act), those issues may not be the subject of formal action during these meeting. Actions will be restricted to those issues specifically listed in this notice and any issues arising after publication of this notice that require emergency action under Section 305(c) of the Magnuson-Stevens Act, provided that the public has been notified of the Council's intent to take final action to address the emergency.

(Authority: 16 U.S.C. 1801 *et seq.*)

Dated: March 23, 2021.

Tracey L. Thompson,

Acting Deputy Director, Office of Sustainable Fisheries, National Marine Fisheries Service.

[FR Doc. 2021–06278 Filed 3–25–21; 8:45 am]

BILLING CODE 3510–22–P

DEPARTMENT OF COMMERCE

National Oceanic and Atmospheric Administration

[RTID 0648–XA970]

Western Pacific Fishery Management Council; Public Meetings

AGENCY: National Marine Fisheries Service (NMFS), National Oceanic and Atmospheric Administration (NOAA), Commerce.

ACTION: Notice of a public meeting.

SUMMARY: The Western Pacific Fishery Management Council (Council) will hold a meeting of the Social Science Planning Committee (SSPC).

DATES: The SSPC meeting will be held on April 8, 2021, from 1:30 p.m. to 5 p.m., Hawaii Standard Time (HST). See **SUPPLEMENTARY INFORMATION** for the agenda.

ADDRESSES: The meeting will be held by web conference. Audio and visual portions of the web conference can be accessed at: *https://wprfmc.webex.com/wprfmc/onstage/g.php?MTID=edb1473e4ec204f07e79460e1ec8db3bd.* Event number (if prompted): 133 266 1276. Event password (if prompted): SSPC2021mtg. Instructions for connecting to the web conference and providing oral public comments will also be posted on the Council's website at *www.wpcouncil.org.* For assistance with the web conference connection, contact the Council office at (808) 522–8220.

FOR FURTHER INFORMATION CONTACT: Kitty M. Simonds, Executive Director, Western Pacific Fishery Management Council; telephone: (808) 522–8220.

SUPPLEMENTARY INFORMATION: A public comment period will be provided in the agenda. The order in which agenda items are addressed may change. The meeting will run as late as necessary to complete scheduled business.

Agenda

Thursday, April 8, 2021, 1:30 p.m. to 5 p.m. HST

1. Welcome and Introductions
2. Approval of Agenda
3. SSPC Working Group on Integrating Socioeconomic Considerations for Council Actions
4. Socioeconomic Modules for the 2020 Annual Stock Assessment and Fishery Evaluation Reports
   A. COVID Impacts Narrative
   B. Publication and Data Collection Updates
5. Baseline Demographic Data Collection for Regional Surveys
6. National Economics/Human Dimensions Research Strategy
7. Review of SSPC Research Plan and Priorities
8. Project Updates
9. Public Comment
10. Discussion and Recommendations
11. Other Business

Special Accommodations

The meeting is physically accessible to people with disabilities. Requests for sign language interpretation or other auxiliary aids should be directed to Kitty M. Simonds, (808) 522–8220 (voice) or (808) 522–8226 (fax), at least 5 days prior to the meeting date.

Authority: 16 U.S.C. 1801 *et seq.*

Dated: March 23, 2021.

Tracey L. Thompson,

Acting Deputy Director, Office of Sustainable Fisheries, National Marine Fisheries Service.

[FR Doc. 2021–06315 Filed 3–25–21; 8:45 am]

BILLING CODE 3510–22–P

COMMITTEE FOR PURCHASE FROM PEOPLE WHO ARE BLIND OR SEVERELY DISABLED

Public Meeting

AGENCY: Committee for Purchase From People Who Are Blind or Severely Disabled.

ACTION: Notice of public meeting.

SUMMARY: The Committee is announcing a public meeting to be held April 8, 2021.

DATES: *Registration is due no later than:* April 6, 2021.

ADDRESSES: Committee for Purchase From People Who Are Blind or Severely Disabled, 1401 S Clark Street, Suite 715, Arlington, Virginia 22202–4149.

FOR FURTHER INFORMATION CONTACT: For further information or to submit comments contact: Angela Phifer, Telephone: (703) 798–5873 or email *CMTEFedReg@AbilityOne.gov.*

SUPPLEMENTARY INFORMATION: This notice is published pursuant to 41 U.S.C. 8503(a)(2) and 41 CFR 51–2.3. Its purpose is to provide interested persons an opportunity to register to attend a public meeting.

Summary: This notice provides information to access and participate in the April 8, 2021 regular quarterly public meeting of the Committee for Purchase From People Who Are Blind or Severely Disabled, operating as the U.S. AbilityOne Commission (Commission), via webinar. The AbilityOne Program employs people who are blind or have significant disabilities through federal contracts. The Javits-Wagner-O'Day Act (41 U.S.C. Chapter 85) authorizes the contracts and established 15 Presidential appointees, including private citizens conversant with the employment interests and concerns of people who are blind or significantly disabled. Presidential appointees also include representatives of federal agencies. The public meetings include updates from the Commission and staff.

Date and Time: April 8, 2021, from 9:00 a.m. to 12:00 p.m., EDT.

Place: This meeting will occur via Zoom webinar.

Commission Statement: As the Commission implements new strategies and priorities, we are committed to public meetings that provide substantive information. These meetings also provide an opportunity for input from the disability community and other stakeholders. On April 8, 2021, the Commission will hold a listening session, and requests input on the following questions:

(1) How can the AbilityOne Program contribute to objectives of Executive Order 13985 on Advancing Racial Equity and Support for Underserved Communities Through the Federal Government? (The Executive Order includes people with disabilities, and may be accessed here: Executive Order On Advancing Racial Equity and Support for Underserved Communities Through the Federal Government | The White House).

(2) What future Commission meeting topics or presentations would members of the public like to see to better understand the AbilityOne Program?

(3) How can the Commission increase transparency in its administration of the AbilityOne Program and/or its own operations?

Registration: Attendees must register not later than 11:59 p.m. on Tuesday, April 6, 2021 EDT. The registration link will be accessible on the Commission's home page, *www.abilityone.gov,* not later than March 29, 2021. During registration, you may choose to make comments or a statement. Comments will be shared at the meeting, and speakers will be identified, based on registrations received.

Personal Information: Do not include any personally identifiable information that you do not want publicly disclosed—*e.g.,* address, phone number or other contact information, or confidential business information.

For Further Information, Contact: Angela Phifer, (703) 798–5873.

The Commission is not subject to the requirements of 5 U.S.C. 552b; however, the Commission published this notice to encourage the broadest possible participation in its April 8, 2021 public meeting.

Michael R. Jurkowski,

Deputy Director, Business & PL Operations.

[FR Doc. 2021–06318 Filed 3–25–21; 8:45 am]

BILLING CODE 6353–01–P

COMMITTEE FOR PURCHASE FROM PEOPLE WHO ARE BLIND OR SEVERELY DISABLED

Procurement List; Proposed Deletions

AGENCY: Committee for Purchase From People Who Are Blind or Severely Disabled.

ACTION: Proposed deletions from the Procurement List.

SUMMARY: The Committee is proposing to delete product(s) and service(s) from the Procurement List that were furnished by nonprofit agencies employing persons who are blind or have other severe disabilities.

DATES: Comments must be received on or before: April 25, 2021.

ADDRESSES: Committee for Purchase From People Who Are Blind or Severely Disabled, 1401 S Clark Street, Suite 715, Arlington, Virginia 22202–4149.

FOR FURTHER INFORMATION CONTACT: For further information or to submit comments contact: Michael R. Jurkowski, Telephone: (703) 603–2117, Fax: (703) 603–0655, or email *CMTEFedReg@AbilityOne.gov.*

SUPPLEMENTARY INFORMATION: This notice is published pursuant to 41 U.S.C. 8503(a)(2) and 41 CFR 51–2.3. Its purpose is to provide interested persons an opportunity to submit comments on the proposed actions.

Deletions

The following product(s) and service(s) are proposed for deletion from the Procurement List:

Product(s)

NSN(s)—Product Name(s): MR 858—Extra Life
Designated Source of Supply: Industries of the Blind, Inc., Greensboro, NC
Contracting Activity: Military Resale-Defense Commissary Agency

NSN(s)—Product Name(s):
MR 1172—Sweeper Set, Wet and Dry
MR 1174—Refill, Sweeper Set, Dry Cloths, 30 Count
Designated Source of Supply: LC Industries, Inc., Durham, NC
Contracting Activity: Military Resale-Defense Commissary Agency

NSN(s)—Product Name(s):
MR 804—Grill Basket
MR 889—Ergo Garlic Press
Designated Source of Supply: Cincinnati Association for the Blind, Cincinnati, OH
Contracting Activity: Military Resale-Defense Commissary Agency

Service(s)

Service Type: Transcription Services
Mandatory for: Equal Employment Office: Federal Bureau of Prisons, Washington, DC
Designated Source of Supply: Lighthouse for the Blind of Houston, Houston, TX
Contracting Activity: FEDERAL PRISON SYSTEM, CENTRAL OFFICE

Service Type: Preservation and Packaging
Mandatory for: New Cumberland Army Depot, New Cumberland, PA
Designated Source of Supply: ForSight Vision, York, PA
Contracting Activity: DEFENSE LOGISTICS AGENCY, DLA SUPPORT SERVICES—DSS

Michael R. Jurkowski,

Deputy Director, Business & PL Operations.

[FR Doc. 2021–06303 Filed 3–25–21; 8:45 am]

BILLING CODE 6353–01–P

DEPARTMENT OF EDUCATION

Privacy Act of 1974; Matching Program; Correction

AGENCY: Office of Federal Student Aid, Department of Education.

ACTION: Notice; correction.

SUMMARY: On March 8, 2021, the Department of Education (Department) published in the **Federal Register** a notice announcing the reestablishment of a matching program between the Department and the Social Security Administration (SSA) to assist the Department in its obligation to ensure that applicants for student financial assistance under title IV of the Higher Education Act of 1965, as amended, satisfy eligibility requirements. This notice corrects language in that notice by removing references to an SSA-restricted data field, date of death, and by more closely mirroring the description of the purpose in the computer matching agreement. All other information in the March 8, 2021 **Federal Register** notice, remains the same.

DATES: This correction is applicable on March 26, 2021.

FOR FURTHER INFORMATION CONTACT: Gerard Duffey, Management and Program Analyst, Wanamaker Building, U.S. Department of Education, Federal Student Aid, 100 Penn Square East, Suite 509.B10, Philadelphia, PA 19107. Telephone: (215) 656–3249.

If you use a telecommunications device for the deaf (TDD) or a text telephone (TTY), call the Federal Relay Service (FRS), toll-free, at 1–800–877–8339.

SUPPLEMENTARY INFORMATION:

Corrections:

In FR Doc 2021–04710 appearing on page 13355–13356 in the **Federal Register** of March 8, 2021 (86 FR 13355), the following corrections are made:

1. On page 13356, in the first column, the two paragraphs under the heading ''Purpose(s)'' are revised to read as follows:

The purpose of this matching program is to assist the U.S. Department of Education (ED) in its obligation to ensure that applicants for student financial assistance under Title IV of the Higher Education Act of 1965, as amended (HEA) (20 U.S.C. 1070 *et seq.*), satisfy eligibility requirements. This matching program establishes the terms, safeguards, and procedures under which the Social Security Administration (SSA) will provide ED Social Security number (SSN) verification, citizenship status as recorded in SSA records, and death indicators (when applicable).

2. On page 13356, in the second column, in the second paragraph that follows the heading ''Categories of Records'', in the fourth sentence, remove ''date of death'' and, in its place, add ''death indicator''.

Accessible Format: On request to the program contact person listed under **FOR FURTHER INFORMATION CONTACT**, individuals with disabilities can obtain this document in an accessible format. The Department will provide the requestor with an accessible format that may include Rich Text Format (RTF) or text format (txt), a thumb drive, an MP3 file, braille, large print, audiotape, or compact disc, or other accessible format.

Electronic Access to This Document: The official version of this document is the document published in the **Federal Register**. You may access the official edition of the **Federal Register** and the Code of Federal Regulations at *www.govinfo.gov.* At this site you can view this document, as well as all other documents of this Department published in the **Federal Register**, in text or Portable Document Format (PDF). To use PDF you must have Adobe Acrobat Reader, which is available free at the site.

You may also access documents of the Department published in the **Federal Register** by using the article search feature at *www.federalregister.gov.* Specifically, through the advanced search feature at this site, you can limit your search to documents published by the Department.

Robin Minor,

Acting Chief Operating Officer, Federal Student Aid.

[FR Doc. 2021–06262 Filed 3–25–21; 8:45 am]

BILLING CODE 4000–01–P

DEPARTMENT OF EDUCATION

[Docket No.: ED–2021–SCC–0008]

Agency Information Collection Activities; Submission to the Office of Management and Budget for Review and Approval; Comment Request; Trends in International Mathematics and Science Study (TIMSS 2023) Field Test Sampling and Recruitment

AGENCY: Institute of Education Sciences (IES), Department of Education (ED).

ACTION: Notice.

SUMMARY: In accordance with the Paperwork Reduction Act of 1995, ED is proposing a revision of a currently approved information collection.

DATES: Interested persons are invited to submit comments on or before April 26, 2021.

ADDRESSES: Written comments and recommendations for proposed information collection requests should be sent within 30 days of publication of this notice to *www.reginfo.gov/public/do/PRAMain.* Find this information collection request by selecting ''Department of Education'' under ''Currently Under Review,'' then check ''Only Show ICR for Public Comment'' checkbox. Comments may also be sent to *ICDocketmgr@ed.gov.*

FOR FURTHER INFORMATION CONTACT: For specific questions related to collection activities, please contact Carrie Clarady, 202–245–6347.

SUPPLEMENTARY INFORMATION: The Department of Education (ED), in accordance with the Paperwork Reduction Act of 1995 (PRA) (44 U.S.C. 3506(c)(2)(A)), provides the general public and Federal agencies with an opportunity to comment on proposed, revised, and continuing collections of information. This helps the Department assess the impact of its information collection requirements and minimize the public's reporting burden. It also helps the public understand the Department's information collection requirements and provide the requested data in the desired format. ED is soliciting comments on the proposed information collection request (ICR) that is described below. The Department of Education is especially interested in public comment addressing the following issues: (1) Is this collection necessary to the proper functions of the Department; (2) will this information be processed and used in a timely manner; (3) is the estimate of burden accurate; (4) how might the Department enhance the quality, utility, and clarity of the information to be collected; and (5) how might the Department minimize the burden of this collection on the respondents, including through the use of information technology. Please note that written comments received in response to this notice will be considered public records.

Title of Collection: Trends in International Mathematics and Science Study (TIMSS 2023) Field Test Sampling and Recruitment.

OMB Control Number: 1850–0695.

Type of Review: A revision of a currently approved information collection.

Respondents/Affected Public: Individuals and Households.

Total Estimated Number of Annual Responses: 3,199.

Total Estimated Number of Annual Burden Hours: 1,040.

Abstract: The Trends in International Mathematics and Science Study (TIMSS), conducted by the National Center for Education Statistics (NCES), within the U.S. Department of Education (ED), is an international assessment of fourth and eighth grade students' achievement in mathematics and science. Since its inception in 1995, TIMSS has continued to assess students every 4 years (1995, 1999, 2003, 2007, 2011, 2015, and 2019), with the next TIMSS assessment, TIMSS 2023, being the eighth iteration of the study. In TIMSS 2023, approximately 65 countries or education systems will participate. The United States will participate in TIMSS 2023 to continue to monitor the progress of its students compared to that of other nations and to provide data on factors that may influence student achievement.

TIMSS is led by the International Association for the Evaluation of Educational Achievement (IEA), an international collective of research organizations and government agencies that create the frameworks used to develop the assessment, the survey instruments, and the study timeline. IEA decides and agrees upon a common set of standards, procedures, and timelines for collecting and reporting data, all of which must be followed by all participating countries. As a result, TIMSS is able to provide a reliable and comparable measure of student skills in participating countries. In the U.S., NCES conducts this study in collaboration with the IEA and a number of contractors to ensure proper implementation of the study and adoption of practices in adherence to the IEA's standards. Participation in TIMSS is consistent with NCES's mandate of acquiring and disseminating data on educational activities and student achievement in the United States compared with foreign nations

[The Educational Sciences Reform Act of 2002 (ESRA 2002, 20 U.S.C. 9543)].

TIMSS 2023 will be a computer-based assessment (referred to as ''eTIMSS''), administered using the eTIMSS player via Chromebook tablets with attached keyboards. TIMSS 2023 builds on the work of TIMSS 2019, which primarily used an electronic assessment format but included a bridge study to examine the effect of administering the assessment on tablet versus paper and establish the link to maintain trends. TIMSS 2023 will be the second eTIMSS assessment in the United States.

Because TIMSS is a collaborative effort among many parties, the United States must adhere to the international schedule set forth by the IEA, including the availability of final field test and main study plans as well as draft and final questionnaires. In order to meet the international data collection schedule, to align with recruitment for other NCES studies (*e.g.,* the National Assessment of Education Progress, NAEP), and for schools to put the TIMSS 2023 field test assessment on their Spring 2022 calendars, recruitment activities for the field test will begin in June of 2021. This package requests approval to conduct sampling and recruitment activities associated with the TIMSS 2023 field test, which will be conducted in March and April 2022. A separate 60-day package will be submitted in August 2021 to request approval for the field test data collection materials and the main study sampling and recruiting plan.

Dated: March 23, 2021.

Stephanie Valentine,

PRA Coordinator, Strategic Collections and Clearance Governance and Strategy Division, Office of Chief Data Officer, Office of Planning, Evaluation and Policy Development.

[FR Doc. 2021–06279 Filed 3–25–21; 8:45 am]

BILLING CODE 4000–01–P

DEPARTMENT OF EDUCATION

[Docket No. ED–2021–SCC–0048]

Agency Information Collection Activities; Comment Request; Private School Universe Survey (PSS) 2019–20 and 2021–22

AGENCY: Institute of Education Sciences (IES), Department of Education (ED).

ACTION: Notice.

SUMMARY: In accordance with the Paperwork Reduction Act of 1995, ED is proposing an extension without change of a currently approved collection.

DATES: Interested persons are invited to submit comments on or before May 25, 2021.

ADDRESSES: To access and review all the documents related to the information collection listed in this notice, please use *http://www.regulations.gov* by searching the Docket ID number ED–2021–SCC–0048. Comments submitted in response to this notice should be submitted electronically through the Federal eRulemaking Portal at *http://www.regulations.gov* by selecting the Docket ID number or via postal mail, commercial delivery, or hand delivery. If the *regulations.gov* site is not available to the public for any reason, ED will temporarily accept comments at *ICDocketMgr@ed.gov.* Please include the docket ID number and the title of the information collection request when requesting documents or submitting comments. *Please note that comments submitted by fax or email and those submitted after the comment period will not be accepted.* Written requests for information or comments submitted by postal mail or delivery should be addressed to the PRA Coordinator of the Strategic Collections and Clearance Governance and Strategy Division, U.S. Department of Education, 400 Maryland Ave. SW, LBJ, Room 6W208C, Washington, DC 20202–8240.

FOR FURTHER INFORMATION CONTACT: For specific questions related to collection activities, please contact Carrie Clarady, (202) 245–6347.

SUPPLEMENTARY INFORMATION: The Department of Education (ED), in accordance with the Paperwork Reduction Act of 1995 (PRA) (44 U.S.C. 3506(c)(2)(A)), provides the general public and Federal agencies with an opportunity to comment on proposed, revised, and continuing collections of information. This helps the Department assess the impact of its information collection requirements and minimize the public's reporting burden. It also helps the public understand the Department's information collection requirements and provide the requested data in the desired format. ED is soliciting comments on the proposed information collection request (ICR) that is described below. The Department of Education is especially interested in public comment addressing the following issues: (1) Is this collection necessary to the proper functions of the Department; (2) will this information be processed and used in a timely manner; (3) is the estimate of burden accurate; (4) how might the Department enhance the quality, utility, and clarity of the information to be collected; and (5) how might the Department minimize the burden of this collection on the respondents, including through the use of information technology. Please note that written comments received in response to this notice will be considered public records.

Title of Collection: Private School Universe Survey (PSS) 2019–20 and 2021–22.

OMB Control Number: 1850–0641.

Type of Review: Extension without change of a currently approved collection.

Respondents/Affected Public: Individuals and Households.

Total Estimated Number of Annual Responses: 32,677.

Total Estimated Number of Annual Burden Hours: 6,577.

Abstract: The Private School Universe Survey (PSS) is conducted by the National Center for Education Statistics (NCES) to collect basic information from the universe of private elementary and secondary schools in the United States. The PSS is designed to gather biennial data on the total number of private schools, teachers, and students, along with a variety of related data, including: Religious orientation; grade-levels taught and size of school; length of school year and of school day; total student enrollment by gender (K–12); number of high school graduates; whether a school is single-sexed or coeducational; number of teachers employed; program emphasis; and existence and type of its kindergarten program. The PSS includes all schools that are not supported primarily by public funds, that provide classroom instruction for one or more of grades K–12 or comparable ungraded levels, and that have one or more teachers. The PSS is also used to create a universe list of private schools for use as a sampling frame for NCES surveys of private schools. The request to conduct the 2019–20 and 2021–22 PSS data collections, and the 2021–22 PSS list frame building operations, was approved in April 2019 (OMB #1850–0641 v.9), and the last change was approved in June 2020 (OMB #1850–0641 v.12). This submission is materially unchanged from previous submissions and is submitted solely to request an extension for data collection activities. The current OMB clearance expires in April 2022, but data collection activities are currently scheduled to extend into late May 2022. There are no changes to burden or cost to the Federal Government.

Dated: March 22, 2021.

Juliana Pearson,

PRA Coordinator, Strategic Collections and Clearance, Governance and Strategy Division, Office of Chief Data Officer, Office of Planning, Evaluation and Policy Development.

[FR Doc. 2021–06238 Filed 3–25–21; 8:45 am]

BILLING CODE 4000–01–P

DEPARTMENT OF EDUCATION

[Docket No.: ED–2021–SCC–0047]

Agency Information Collection Activities; Comment Request; US Department of Education Pre-Authorized Debit Account Brochure and Application

AGENCY: Federal Student Aid (FSA), Department of Education (ED).

ACTION: Notice.

SUMMARY: In accordance with the Paperwork Reduction Act of 1995, ED is proposing an extension without change of a currently approved collection.

DATES: Interested persons are invited to submit comments on or before May 25, 2021.

ADDRESSES: To access and review all the documents related to the information collection listed in this notice, please use *http://www.regulations.gov* by searching the Docket ID number ED–2021–SCC–0047. Comments submitted in response to this notice should be submitted electronically through the Federal eRulemaking Portal at *http://www.regulations.gov* by selecting the Docket ID number or via postal mail, commercial delivery, or hand delivery. If the *regulations.gov* site is not available to the public for any reason, ED will temporarily accept comments at *ICDocketMgr@ed.gov.* Please include the docket ID number and the title of the information collection request when requesting documents or submitting comments. *Please note that comments submitted by fax or email and those submitted after the comment period will not be accepted.* Written requests for information or comments submitted by postal mail or delivery should be addressed to the PRA Coordinator of the Strategic Collections and Clearance Governance and Strategy Division, U.S. Department of Education, 400 Maryland Ave. SW, LBJ, Room 208C, Washington, DC 20202–8240.

FOR FURTHER INFORMATION CONTACT: For specific questions related to collection activities, please contact Beth Grebeldinger, 202–377–4018.

SUPPLEMENTARY INFORMATION: The Department of Education (ED), in accordance with the Paperwork Reduction Act of 1995 (PRA) (44 U.S.C. 3506(c)(2)(A)), provides the general public and Federal agencies with an opportunity to comment on proposed, revised, and continuing collections of information. This helps the Department assess the impact of its information collection requirements and minimize the public's reporting burden. It also helps the public understand the Department's information collection requirements and provide the requested data in the desired format. ED is soliciting comments on the proposed information collection request (ICR) that is described below. The Department of Education is especially interested in public comment addressing the following issues: (1) Is this collection necessary to the proper functions of the Department; (2) will this information be processed and used in a timely manner; (3) is the estimate of burden accurate; (4) how might the Department enhance the quality, utility, and clarity of the information to be collected; and (5) how might the Department minimize the burden of this collection on the respondents, including through the use of information technology. Please note that written comments received in response to this notice will be considered public records.

Title of Collection: US Department of Education Pre-Authorized Debit Account Brochure and Application.

OMB Control Number: 1845–0025.

Type of Review: An extension without change of a currently approved collection.

Respondents/Affected Public: Individuals and Households.

Total Estimated Number of Annual Responses: 1,667.

Total Estimated Number of Annual Burden Hours: 138.

Abstract: The Pre-authorized Debit Account Brochure and Application (PDA Application) serves as the means by which an individual with a defaulted federal education debt (student loan or grant overpayment) that is held by the U.S. Department of Education (ED) requests and authorizes the automatic debiting of payments toward satisfaction of the debt from the borrower's checking or savings account. The PDA Application explains the automatic debiting process and collects the individual's authorization for the automatic debiting and the bank account information needed by ED to debit the individual's account.

Dated: March 22, 2021.

Juliana Pearson,

PRA Coordinator, Strategic Collections and Clearance, Governance and Strategy Division, Office of Chief Data Officer, Office of Planning, Evaluation and Policy Development.

[FR Doc. 2021–06217 Filed 3–25–21; 8:45 am]

BILLING CODE 4000–01–P

DEPARTMENT OF EDUCATION

[Docket No.: ED–2020–SCC–0183]

Agency Information Collection Activities; Submission to the Office of Management and Budget for Review and Approval; Comment Request; Application for the U.S. Presidential Scholars Program

AGENCY: Office of Communication and Outreach (OCO), Department of Education (ED).

ACTION: Notice.

SUMMARY: In accordance with the Paperwork Reduction Act of 1995, ED is proposing an extension of a currently approved information collection.

DATES: Interested persons are invited to submit comments on or before April 26, 2021.

ADDRESSES: Written comments and recommendations for proposed information collection requests should be sent within 30 days of publication of this notice to *www.reginfo.gov/public/do/PRAMain.* Find this information collection request by selecting ''Department of Education'' under ''Currently Under Review,'' then check ''Only Show ICR for Public Comment'' checkbox. Comments may also be sent to *ICDocketmgr@ed.gov.*

FOR FURTHER INFORMATION CONTACT: For specific questions related to collection activities, please contact Simone Olson, 202–205–8719.

SUPPLEMENTARY INFORMATION: The Department of Education (ED), in accordance with the Paperwork Reduction Act of 1995 (PRA) (44 U.S.C. 3506(c)(2)(A)), provides the general public and Federal agencies with an opportunity to comment on proposed, revised, and continuing collections of information. This helps the Department assess the impact of its information collection requirements and minimize the public's reporting burden. It also helps the public understand the Department's information collection requirements and provide the requested data in the desired format. ED is soliciting comments on the proposed information collection request (ICR) that is described below. The Department of

Education is especially interested in public comment addressing the following issues: (1) Is this collection necessary to the proper functions of the Department; (2) will this information be processed and used in a timely manner; (3) is the estimate of burden accurate; (4) how might the Department enhance the quality, utility, and clarity of the information to be collected; and (5) how might the Department minimize the burden of this collection on the respondents, including through the use of information technology. Please note that written comments received in response to this notice will be considered public records.

Title of Collection: Application for the U.S. Presidential Scholars Program.

OMB Control Number: 1860–0504.

Type of Review: An extension of a currently approved information collection.

Respondents/Affected Public: Individuals and Households.

Total Estimated Number of Annual Responses: 3,300.

Total Estimated Number of Annual Burden Hours: 52,800.

Abstract: The United States Presidential Scholars Program is a national recognition program to honor outstanding graduating high school seniors. Candidates are invited to apply based on academic achievements on the SAT or ACT assessments, through nomination from Chief State School Officers, other recognition program partner organizations, on artistic merits based on participation in a national talent program and achievement in career and technical education programs. This program was established by Presidential Executive Orders 11155, 12158 and 13697.

Dated: March 23, 2021.

Stephanie Valentine,

PRA Coordinator, Strategic Collections and Clearance Governance and Strategy Division Office of Chief Data Officer, Office of Planning, Evaluation and Policy Development.

[FR Doc. 2021–06272 Filed 3–25–21; 8:45 am]

BILLING CODE 4000–01–P

DEPARTMENT OF ENERGY

Agency Information Collection Extension

AGENCY: U.S. Department of Energy.

ACTION: Notice of request for comments.

SUMMARY: The Department of Energy (DOE), pursuant to the Paperwork Reduction Act of 1995, intends to extend for three years, an information collection request with the Office of Management and Budget (OMB).

DATES: Comments regarding this proposed information collection must be received on or before May 24, 2021. If you anticipate any difficulty in submitting comments within that period, contact the person listed in the **FOR FURTHER INFORMATION CONTACT** section as soon as possible.

ADDRESSES: Written comments may be sent to Alesia Harmon, U.S. Department of Energy, 1000 Independence Avenue SW, Washington, DC 20585 –1615, or by email at *alesia.gant@hq.doe.gov;* Mrs. Harmon may also be contacted at (202) 287–1476.

FOR FURTHER INFORMATION CONTACT: Alesia Harmon at (202) 287–1476, or at the address listed in ADDRESSES. Reporting requirements can be found at: *https://energy.gov/sites/prod/files/2016/01/f28/Policy%20Flash%202016-11%20-%20Model%20H-Clause%201-14-16.pdf.*

SUPPLEMENTARY INFORMATION: Comments are invited on: (a) Whether the extended collection of information is necessary for the proper performance of the functions of the agency, including whether the information shall have practical utility; (b) the accuracy of the agency's estimate of the burden of the proposed collection of information, including the validity of the methodology and assumptions used; (c) ways to enhance the quality, utility, and clarity of the information to be collected; and (d) ways to minimize the burden of the collection of information on respondents, including through the use of automated collection techniques or other forms of information technology.

This information collection request contains:

(1) *OMB No.* 1910–0600.

(2) *Information Collection Request Titled:* Industrial Relations.

(3) *Type of Review:* Renewal.

(4) *Purpose:* This information is required for management oversight of the Department of Energy's Facilities Management Contractors and to ensure that the programmatic and administrative management requirements of the contract are managed efficiently and effectively.

(5) *Annual Estimated Number of Respondents:* 39.

(6) *Annual Estimated Number of Total Responses:* 282.

(7) *Annual Estimated Number of Burden Hours:* 3530.

(8) *Annual Estimated Reporting and Recordkeeping Cost Burden:* $0.

Authority: 42 U.S.C. 7256; 48 CFR 970.0370–1.

Signing Authority

This document of the Department of Energy was signed on March 15, 2021, by John Bashista, Director, Office of Acquisition Management, pursuant to delegated authority from the Secretary of Energy. That document with the original signature and date is maintained by DOE. For administrative purposes only, and in compliance with requirements of the Office of the Federal Register, the undersigned DOE Federal Register Liaison Officer has been authorized to sign and submit the document in electronic format for publication, as an official document of the Department of Energy. This administrative process in no way alters the legal effect of this document upon publication in the **Federal Register**.

Signed in Washington, DC, on March 23, 2021.

Treena V. Garrett,

Federal Register Liaison Officer, U.S. Department of Energy.

[FR Doc. 2021–06277 Filed 3–25–21; 8:45 am]

BILLING CODE 6450–01–P

DEPARTMENT OF ENERGY

Energy Information Administration

Agency Information Collection Proposed Extension

AGENCY: U.S. Energy Information Administration (EIA), Department of Energy (DOE).

ACTION: Notice and request for comments.

SUMMARY: EIA invites public comment on the proposed three-year extension, with changes, to the Petroleum Marketing Program (PMP) as required under the Paperwork Reduction Act of 1995. EIA's PMP collects volumetric and price information needed for determining the supply of and demand for crude oil and refined petroleum products. PMP consists of 10 surveys that collect data on petroleum products. EIA uses this information to monitor volumes and prices for crude oil and petroleum products.

DATES: EIA must receive all comments on this proposed information collection no later than May 25, 2021. If you anticipate any difficulties in submitting your comments by the deadline, contact the person listed in the **ADDRESSES** section of this notice as soon as possible.

ADDRESSES: Submit comments electronically to Tammy Heppner by email at *tammy.heppner@eia.gov.*

FOR FURTHER INFORMATION CONTACT: Tammy Heppner, U.S. Energy Information Administration, telephone (202) 586–4748, or by email at *tammy.heppner@eia.gov.* The forms and instructions are available on EIA's website at *http://www.eia.gov/survey/notice/marketing2021.php.*

SUPPLEMENTARY INFORMATION: This information collection request contains:

(1) *OMB No.:* 1905–0174;

(2) *Information Collection Request Title:* Petroleum Marketing Program;

(3) *Type of Request:* Three year extension with changes;

(4) *Purpose:* The surveys included in the Petroleum Marketing Program collect volume and price information needed for determining the supply of and demand for crude oil and refined petroleum products. These surveys provide a basic set of data pertaining to the structure, efficiency, and behavior of petroleum markets. These data are published by EIA on its website, at *http://www.eia.gov.* The Petroleum Marketing Program consists of the following surveys:

Form EIA–14 *Refiners' Monthly Cost Report;*

Form EIA–182 *Domestic Crude Oil First Purchase Report;*

Form EIA–782A *Refiners'/Gas Plant Operators' Monthly Petroleum Product Sales Report;*

Form EIA–782C *Monthly Report of Prime Supplier Sales of Petroleum Products Sold For Local Consumption;*

Form EIA–821 *Annual Fuel Oil and Kerosene Sales Report;*

Form EIA–856 *Monthly Foreign Crude Oil Acquisition Report;*

Form EIA–863 *Petroleum Product Sales Identification Survey;*

Form EIA–877 *Winter Heating Fuels Telephone Survey;*

Form EIA–878 *Motor Gasoline Price Survey;*

Form EIA–888 *On-Highway Diesel Fuel Price Survey.;*

(4a) *Proposed Changes to Information Collection:*

Form EIA–888, On-Highway Diesel Fuel Price Survey

EIA is proposing to collect annual sales volumes of on-highway diesel fuel on Form EIA–888, *On-Highway Diesel Fuel Price Survey.* This survey collects weekly retail on-highway diesel fuel prices from a sample of truck stops and service stations and publishes price estimates at various regional levels and the State of California. EIA is updating its frame of retail diesel fuel outlets and proposing to redesign the sample of retail outlets using a new sample design. The new sample will replace the current sample that reports on Form EIA–888. EIA will continue to use Form EIA–888, Schedule A to collect weekly prices from the new sample and will use the new Form EIA–888, Schedule B to collect annual sales volume information and station characteristics that will be used to determine eligibility and size. EIA will use annual sales volumes of on-highway diesel fuel to determine the measure of size used for weighting data reported by the outlets selected in the new sample and are collected one time from newly sampled outlets.

Form EIA–878, Motor Gasoline Price Survey

EIA proposes to modify Schedule B of Form EIA–878, *Motor Gasoline Price Survey* to further clarify the collection of gasoline octane levels and ethanol content by grade for annual gasoline sales volumes. These volumes are used to determine a measure of size used for weighting data reported by the sampled outlets and are collected one time from newly sampled outlets.

Form EIA–877, Winter Heating Fuels Telephone Survey

EIA proposes to collect residential heating oil and propane prices on a monthly basis during the off-heating season (April to September) beginning April 2023 on Form EIA–877, *Winter Heating Fuels Telephone Survey.* This survey collects weekly residential heating oil and propane prices during the heating season, October to March, from a sample of retail outlets that sell these heating fuels. EIA receives many requests for EIA–877 summer prices each year because many heating oil and propane customers fill their tanks before the winter heating season starts, when prices are generally lower than during the winter months. Collecting monthly prices during the summer will meet the needs of these customers, as well as provide a data series for more comprehensive EIA analysis on these markets.

(5) *Annual Estimated Number of Respondents:* 22,516;

(6) *Annual Estimated Number of Total Responses:* 196,032;

(7) *Annual Estimated Number of Burden Hours:* 63,226;

(8) *Annual Estimated Reporting and Recordkeeping Cost Burden:* $5,162,403 (63,226 annual burden hours multiplied by $81.65 per hour). EIA estimates that respondents will have no additional costs associated with the surveys other than the burden hours and the maintenance of the information during the normal course of business.

Comments are invited on whether or not: (a) The proposed collection of information is necessary for the proper performance of agency functions, including whether the information will have a practical utility; (b) EIA's estimate of the burden of the proposed collection of information, including the validity of the methodology and assumptions used, is accurate; (c) EIA can improve the quality, utility, and clarity of the information it will collect; and (d) EIA can minimize the burden of the collection of information on respondents, such as automated collection techniques or other forms of information technology.

Statutory Authority: 15 U.S.C. 772(b) and 42 U.S.C. 7101 *et seq.*

Signed in Washington, DC, on March 22, 2021.

Samson A. Adeshiyan,

Director, Office of Statistical Methods and Research, U.S. Energy Information Administration.

[FR Doc. 2021–06270 Filed 3–25–21; 8:45 am]

BILLING CODE 6450–01–P

DEPARTMENT OF ENERGY

Federal Energy Regulatory Commission

[Docket No. CP17–101–000]

Transcontinental Gas Pipe Line Company, LLC; Notice of Request for Extension of Time

Take notice that on March 19, 2021, Transcontinental Gas Pipe Line Company, LLC (Transco) requested that the Federal Energy Regulatory Commission (Commission) grant an extension of time until May 3, 2023 to complete construction of, and place into service, its Northeast Supply Enhancement (NESE) Project located in Pennsylvania, onshore and offshore New Jersey, and offshore New York as authorized in the Order Issuing Certificate (Order) on May 3, 2019.[1] Ordering Paragraph (B)(1) of the Order required Transco to complete the construction of the NESE Project facilities and make them available for service within two years of the date of the Order, or by May 3, 2021.

On May 15, 2020, the New York State Department of Environmental Conservation (NYSDEC) denied Transco's application for a water quality certification under section 401 of the Clean Water Act. Simultaneously, the New Jersey Department of Environmental Protection denied Transco's application for a water quality certification and other individual permits. As part of its denial, NYSDEC

[1] *Transcontinental Gas Pipe Line Company, LLC,* 167 FERC ¶ 61,110 (2019).

cites lack of demand for the NESE Project. Transco asserts that the market disruption caused by the COVID–19 pandemic is temporary and a need for additional firm transportation remains. Transco states that its binding precedent agreement with National Grid remains in full force and effect and Transco remains fully committed to constructing the NESE Project. Transco avers the COVID–19 pandemic is also having a direct and adverse impact on state and local areas resources and Transco's development of the NESE Project. Moreover, Transco states that it plans to refile its section 401 applications later this year. Transco avers that postponement of the in-service date for the NESE Project has no impact on the public interest findings in the Order and the environmental record is current and relevant. Accordingly, Transco now requests an additional two years, or until May 3, 2023, to complete the construction of the NESE Project and make it available for service.

This notice establishes a 15-calendar day intervention and comment period deadline. Any person wishing to comment on Transco's request for an extension of time may do so. No reply comments or answers will be considered. If you wish to obtain legal status by becoming a party to the proceedings for this request, you should, on or before the comment date stated below, file a motion to intervene in accordance with the requirements of the Commission's Rules of Practice and Procedure (18 CFR 385.214 or 385.211) and the Regulations under the Natural Gas Act (18 CFR 157.10).[2]

As a matter of practice, the Commission itself generally acts on requests for extensions of time to complete construction for Natural Gas Act facilities when such requests are contested before order issuance. For those extension requests that are contested,[3] the Commission will aim to issue an order acting on the request within 45 days.[4] The Commission will address all arguments relating to whether the applicant has demonstrated there is good cause to grant the extension.[5] The Commission will not consider arguments that re-litigate the issuance of the Order, including whether the Commission properly found the project to be in the public convenience and necessity and whether the Commission's environmental analysis for the certificate complied with the National Environmental Policy Act.[6] At the time a pipeline requests an extension of time, orders on certificates of public convenience and necessity are final and the Commission will not re-litigate their issuance.[7] The OEP Director, or his or her designee, will act on those extension requests that are uncontested.

In addition to publishing the full text of this document in the **Federal Register**, the Commission provides all interested persons an opportunity to view and/or print the contents of this document via the internet through the Commission's Home Page (*http://ferc.gov*) using the ''eLibrary'' link. Enter the docket number excluding the last three digits in the docket number field to access the document. At this time, the Commission has suspended access to the Commission's Public Reference Room, due to the proclamation declaring a National Emergency concerning COVID–19, issued by the President on March 13, 2020. For assistance, contact FERC at *FERCOnlineSupport@ferc.gov* or call toll-free, (886) 208–3676 or TYY, (202) 502–8659.

The Commission strongly encourages electronic filings of comments, protests and interventions in lieu of paper using the ''eFile'' link at *http://www.ferc.gov.* Persons unable to file electronically may mail similar pleadings to the Federal Energy Regulatory Commission. To mail via USPS, use the following address: Kimberly D. Bose, Secretary, Federal Energy Regulatory Commission, 888 First Street NE, Washington, DC 20426. To mail via any other courier, use the following address: Kimberly D. Bose, Secretary, Federal Energy Regulatory Commission, 12225 Wilkins Avenue, Rockville, Maryland 20852.

Comment Date: 5:00 p.m. Eastern Time on April 6, 2021.

Dated: March 22, 2021.

Kimberly D. Bose,

Secretary.

[FR Doc. 2021–06302 Filed 3–25–21; 8:45 am]

BILLING CODE 6717–01–P

[2] Only motions to intervene from entities that were party to the underlying proceeding will be accepted. *Algonquin Gas Transmission, LLC,* 170 FERC ¶ 61,144, at P 39 (2020).

[3] Contested proceedings are those where an intervenor disputes any material issue of the filing. 18 CFR 385.2201(c)(1) (2020).

[4] *Algonquin Gas Transmission, LLC,* 170 FERC ¶ 61,144, at P 40 (2020).

[5] *Id.* P 40.

[6] Similarly, the Commission will not re-litigate the issuance of an NGA section 3 authorization, including whether a proposed project is not inconsistent with the public interest and whether the Commission's environmental analysis for the permit order complied with NEPA.

[7] *Algonquin Gas Transmission, LLC,* 170 FERC ¶ 61,144, at P 40 (2020).

DEPARTMENT OF ENERGY

Federal Energy Regulatory Commission

[Project No. 2615–054]

Brookfield White Pine Hydro, LLC, Merimil Limited Partnership, and Eagle Creek Kennebec Hydro, LLC; Notice of Application Accepted for Filing and Soliciting Comments, Motions To Intervene, and Protests

Take notice that the following hydroelectric application has been filed with the Commission and is available for public inspection:

a. *Type of Application:* Temporary variance of reservoir elevation and minimum flow requirements.

b. *Project No.:* 2615–054.

c. *Date Filed:* February 26, 2021.

d. *Applicant:* Brookfield White Pine Hydro, LLC, Merimil Limited Partnership, and Eagle Creek Kennebec Hydro, LLC.

e. *Name of Project:* Brassua Hydroelectric Project.

f. *Location:* The project is located on the Moose River in Somerset County, Maine.

g. *Filed Pursuant to:* Federal Power Act 16 U.S.C. 791a–825r.

h. *Applicant Contact:* Mr. Jason Seyfried, Brookfield Renewable, 150 Main Street, Lewiston, ME 04240; telephone (207) 312–8323 and email *Jason.Seyfried@brookfieldrenewable.com.*

i. *FERC Contact:* Linda Stewart, (202) 502–8184, *linda.stewart@ferc.gov.*

j. Deadline for filing comments, motions to intervene, and protests is 30 days from the issuance date of this notice by the Commission.

The Commission strongly encourages electronic filing. Please file comments, motions to intervene, and protests using the Commission's eFiling system at *http://www.ferc.gov/docs-filing/efiling.asp.* Commenters can submit brief comments up to 6,000 characters, without prior registration, using the eComment system at *http://www.ferc.gov/docs-filing/ecomment.asp.* You must include your name and contact information at the end of your comments. For assistance, please contact FERC Online Support at *FERCOnlineSupport@ferc.gov,* (866) 208–3676 (toll free), or (202) 502–8659 (TTY). In lieu of electronic filing, you may submit a paper copy. Submissions sent via the U.S. Postal Service must be addressed to: Kimberly D. Bose, Secretary, Federal Energy Regulatory Commission, 888 First Street NE, Room 1A, Washington, DC 20426. Submissions sent via any other carrier

must be addressed to: Kimberly D. Bose, Secretary, Federal Energy Regulatory Commission, 12225 Wilkins Avenue, Rockville, Maryland 20852. The first page of any filing should include docket number P–2615–054. Comments emailed to Commission staff are not considered part of the Commission record.

The Commission's Rules of Practice and Procedure require all intervenors filing documents with the Commission to serve a copy of that document on each person whose name appears on the official service list for the project. Further, if an intervenor files comments or documents with the Commission relating to the merits of an issue that may affect the responsibilities of a particular resource agency, it must also serve a copy of the document on that resource agency.

k. *Description of Request:* Brookfield White Pine Hydro, LLC, Merimil Limited Partnership, and Eagle Creek Kennebec Hydro, LLC (licensees) request a temporary variance to deviate from the reservoir elevation and minimum flow requirements pursuant to Article 401 of the license. The variance would allow the licensees to draw down the reservoir in order to perform embankment slope remediation work at the dam. The variance would also allow the licensees to modify the minimum flow releases in order to prioritize the salmonid attraction and spawning flows downstream of the project. Because the embankment slope remediation work will require two construction seasons to complete, the licensees propose to draw down the reservoir and modify the minimum flows during the fall of 2021 and the fall of 2022.

l. In addition to publishing the full text of this document in the **Federal Register**, the Commission provides all interested persons an opportunity to view and/or print the contents of this document via the internet through the Commission's Home Page (*http://www.ferc.gov*) using the ''eLibrary'' link. Enter the docket number excluding the last three digits in the docket number field to access the document. At this time, the Commission has suspended access to the Commission's Public Reference Room, due to the proclamation declaring a National Emergency concerning the Novel Coronavirus Disease (COVID–19), issued by the President on March 13, 2020. For assistance, contact FERC at *FERCOnlineSupport@ferc.gov* or call toll-free, (886) 208–3676 or TYY, (202) 502–8659. Agencies may obtain copies of the application directly from the applicant.

m. Individuals desiring to be included on the Commission's mailing list should so indicate by writing to the Secretary of the Commission.

n. *Comments, Protests, or Motions to Intervene:* Anyone may submit comments, a protest, or a motion to intervene in accordance with the requirements of Rules of Practice and Procedure, 18 CFR 385.210, .211, and .214. In determining the appropriate action to take, the Commission will consider all protests or other comments filed, but only those who file a motion to intervene in accordance with the Commission's Rules may become a party to the proceeding. Any comments, protests, or motions to intervene must be received on or before the specified deadline date for the particular application.

o. *Filing and Service of Responsive Documents:* Any filing must (1) bear in all capital letters the title ''COMMENTS'', ''PROTEST'', or ''MOTION TO INTERVENE'' as applicable; (2) set forth in the heading the name of the applicant and the project number of the application to which the filing responds; (3) furnish the name, address, and telephone number of the person commenting, protesting, or intervening; and (4) otherwise comply with the requirements of 18 CFR 385.2001 through 385.2005. All comments, motions to intervene, or protests must set forth their evidentiary basis. Any filing made by an intervenor must be accompanied by proof of service on all persons listed in the service list prepared by the Commission in this proceeding, in accordance with 18 CFR 385.2010.

Dated: March 19, 2021.

Kimberly D. Bose,

Secretary.

[FR Doc. 2021–06254 Filed 3–25–21; 8:45 am]

BILLING CODE 6717–01–P

DEPARTMENT OF ENERGY

Federal Energy Regulatory Commission

[Project No. 11478–021]

Green Mountain Power; Notice of Application Accepted for Filing and Soliciting Comments, Motions To Intervene, and Protests

Take notice that the following hydroelectric application has been filed with the Commission and is available for public inspection:

a. *Application Type:* Amend license to temporarily lower reservoir and replace outlet conduit.

b. *Project No:* 11478–021.

c. *Date Filed:* March 18, 2021.

d. *Applicant:* Green Mountain Power.

e. *Name of Project:* Silver Lake.

f. *Location:* Sucker Brook, Addison County, Vermont.

g. *Filed Pursuant to:* Federal Power Act, 16 U.S.C. 791a–825r.

h. *Applicant Contact:* John Greenan, Green Mountain Power Corporation, 2152 Post Road, Rutland, VT 05701, (802) 770–2195.

i. *FERC Contact:* David Rudisail, (202) 502–6376, *david.rudisail@ferc.gov*.

j. *Deadline for filing comments, motions to intervene, and protests:* April 6, 2021.

The Commission strongly encourages electronic filing. Please file comments, motions to intervene, and protests using the Commission's eFiling system at *http://www.ferc.gov/docs-filing/efiling.asp.* Commenters can submit brief comments up to 6,000 characters, without prior registration, using the eComment system at *http://www.ferc.gov/docs-filing/ecomment.asp.* You must include your name and contact information at the end of your comments. For assistance, please contact FERC Online Support at *FERCOnlineSupport@ferc.gov,* (866) 208–3676 (toll free), or (202) 502–8659 (TTY). In lieu of electronic filing, you may submit a paper copy. Submissions sent via the U.S. Postal Service must be addressed to: Kimberly D. Bose, Secretary, Federal Energy Regulatory Commission, 888 First Street NE, Room 1A, Washington, DC 20426. Submissions sent via any other carrier must be addressed to: Kimberly D. Bose, Secretary, Federal Energy Regulatory Commission, 12225 Wilkins Avenue, Rockville, Maryland 20852. The first page of any filing should include the docket number P–11478–021. Comments emailed to Commission staff are not considered part of the Commission record.

The Commission's Rules of Practice and Procedure require all intervenors filing documents with the Commission to serve a copy of that document on each person whose name appears on the official service list for the project. Further, if an intervenor files comments or documents with the Commission relating to the merits of an issue that may affect the responsibilities of a particular resource agency, they must also serve a copy of the document on that resource agency.

k. Green Mountain Power proposes to temporarily lower the Sugar Hill Reservoir approximately 27.5 feet from the current elevation to allow replacement of the outlet conduit.

l. *Locations of the Application:* This filing may be viewed on the Commission's website at *http://www.ferc.gov* using the ''eLibrary'' link. Enter the docket number excluding the last three digits in the docket number field to access the document. You may also register online at *http://www.ferc.gov/docs-filing/esubscription.asp* to be notified via email of new filings and issuances related to this or other pending projects. For assistance, call 1–866–208–3676 or email *FERCOnlineSupport@ferc.gov,* for TTY, call (202) 502–8659. Agencies may obtain copies of the application directly from the applicant.

m. Individuals desiring to be included on the Commission's mailing list should so indicate by writing to the Secretary of the Commission.

n. *Comments, Protests, or Motions to Intervene:* Anyone may submit comments, a protest, or a motion to intervene in accordance with the requirements of Rules of Practice and Procedure, 18 CFR 385.210, .211, .214, respectively. In determining the appropriate action to take, the Commission will consider all protests or other comments filed, but only those who file a motion to intervene in accordance with the Commission's Rules may become a party to the proceeding. Any comments, protests, or motions to intervene must be received on or before the specified comment date for the particular application.

o. *Filing and Service of Documents:* Any filing must (1) bear in all capital letters the title ''COMMENTS'', ''PROTEST'', or ''MOTION TO INTERVENE'' as applicable; (2) set forth in the heading the name of the applicant and the project number of the application to which the filing responds; (3) furnish the name, address, and telephone number of the person commenting, protesting or intervening; and (4) otherwise comply with the requirements of 18 CFR 385.2001 through 385.2005. All comments, motions to intervene, or protests must set forth their evidentiary basis. Any filing made by an intervenor must be accompanied by proof of service on all persons listed in the service list prepared by the Commission in this proceeding, in accordance with 18 CFR 385.2010.

Dated: March 22, 2021.

Kimberly D. Bose,

Secretary.

[FR Doc. 2021–06305 Filed 3–25–21; 8:45 am]

BILLING CODE 6717–01–P

DEPARTMENT OF ENERGY

Federal Energy Regulatory Commission

Combined Notice of Filings

Take notice that the Commission has received the following Natural Gas Pipeline Rate and Refund Report filings:

Docket Numbers: RP21–625–000.
Applicants: Venture Global Calcasieu Pass, LLC.
Description: Petition For Temporary Waiver of Capacity Release Regulations, et al. of Venture Global Calcasieu Pass, LLC.
Filed Date: 3/17/21.
Accession Number: 20210317–5182.
Comments Due: 5 p.m. ET 3/29/21.

Docket Numbers: RP21–626–000.
Applicants: Elba Express Company, L.L.C.
Description: Compliance filing Annual Interruptible Revenue Crediting Report 2021.
Filed Date: 3/18/21.
Accession Number: 20210318–5039.
Comments Due: 5 p.m. ET 3/30/21.

Docket Numbers: RP21–627–000.
Applicants: Iroquois Gas Transmission System, L.P.
Description: § 4(d) Rate Filing: 3.18.21 Negotiated Rates—Macquarie Energy LLC R–4090–22 to be effective 4/1/2021.
Filed Date: 3/18/21.
Accession Number: 20210318–5056.
Comments Due: 5 p.m. ET 3/30/21.

Docket Numbers: RP21–629–000.
Applicants: Enable Gas Transmission, LLC.
Description: Annual Revenue Crediting Filing of Enable Gas Transmission.
Filed Date: 3/18/21.
Accession Number: 20210318–5268.
Comments Due: 5 p.m. ET 3/30/21.

The filings are accessible in the Commission's eLibrary system (*https://elibrary.ferc.gov/idmws/search/fercgensearch.asp*) by querying the docket number.

Any person desiring to intervene or protest in any of the above proceedings must file in accordance with Rules 211 and 214 of the Commission's Regulations (18 CFR 385.211 and 385.214) on or before 5:00 p.m. Eastern time on the specified comment date. Protests may be considered, but intervention is necessary to become a party to the proceeding.

eFiling is encouraged. More detailed information relating to filing requirements, interventions, protests, service, and qualifying facilities filings can be found at: *http://www.ferc.gov/docs-filing/efiling/filing-req.pdf.* For other information, call (866) 208–3676 (toll free). For TTY, call (202) 502–8659.

Dated: March 19, 2021.

Kimberly D. Bose,

Secretary.

[FR Doc. 2021–06260 Filed 3–25–21; 8:45 am]

BILLING CODE 6717–01–P

DEPARTMENT OF ENERGY

Federal Energy Regulatory Commission

[Docket Nos. RM16–17–000; RM16–17–001]

Data Collection for Analytics and Surveillance and Market-Based Rate Purposes; Supplemental Notice of Technical Workshop

As first announced in the Notice of Technical Workshop issued in this proceeding on February 25, 2021, the Federal Energy Regulatory Commission (Commission) will convene a staff-led technical workshop in the above-referenced proceeding. The technical workshop will now be held on April 22, 2021, approximately from 10:00 a.m. to 3:00 p.m. (ET), which is a change in the date set by the prior notice. The technical workshop will still be held electronically.

This workshop will discuss the timelines, functionalities, and features of the relational database through which the Commission will begin collecting certain market-based rate (MBR) information in accordance with Order No. 860 (MBR Database).[1] This workshop will provide a forum for dialogue between Commission staff and interested entities to discuss the general features of the MBR Database and the process for submitting information into this database through the MBR Portal. For reference, interested entities can access the MBR Database at *https://mbrweb.ferc.gov/.* Attached to this Supplemental Notice is an agenda for the technical workshop.

There is no fee for attendance, and the workshop is open for the public to attend electronically via Webex. Individuals must register to attend the workshop. Individuals who are interested in registering for and attending the workshop can do so here: *https://ferc.webex.com/ferc/j.php?MTID=e6dd18def200b281ff165e57325102ee0.*

For more information about this technical workshop, please contact:

[1] *Data Collection for Analytics and Surveillance and Market-Based Rate Purposes,* Order No. 860, 168 FERC ¶ 61,039 (2019), *order on reh'g,* Order No. 860–A, 170 FERC ¶ 61,129 (2020).

Sarah McKinley (Logistical Information), Office of External Affairs, (202) 502–8004, *sarah.mckinley@ferc.gov.*
Ryan Stertz (Technical Information), Office of Energy Market Regulation, (202) 502–6473, *mbrdatabase@ferc.gov.*

Dated: March 19, 2021.

Kimberly D. Bose,

Secretary.

Staff-Led Technical Workshop on the MBR Database

Docket Nos. RM16–17–000 and RM16–17–001

April 22, 2021

Agenda

10:00 a.m.–10:15 a.m.: Welcome and Opening Remarks
10:15 a.m.–11:00 a.m.: Topic 1—Timelines and Transitions to the Database
1. *Review common terms and definitions used when interfacing with the MBR Portal*
2. *Provide greater detail about filing and submission timelines in light of recent Commission issuances*
3. *How to reference submissions made to the MBR Portal in filings*
4. *How to reference asset appendices in filings*
5. *Overview of differences in requirements for the XML submissions to the MBR Portal and the filing requirements*

11:00 a.m.–11:15 a.m.: Break
11:15 a.m.–12:00 p.m.: Topic 2—Overview of MBR Portal and the Submission Process
1. *General walk-through of the MBR Portal*
2. *How to find and create identifiers*
3. *Review available resources such as lookup tables and available documentation*

12:00 p.m.–1:00 p.m.: Lunch Break
1:00 p.m.–1:45 p.m.: Topic 3—Submission Examples
1. *How to make test submissions when the MBR Database goes live*
2. *Examples of successful submissions*
3. *Examples of failed submissions and troubleshooting error messages*

1:45 p.m.–2:00 p.m.: Break
2:00 p.m.–2:30 p.m.: Topic 4—Reports and Downloading Information
1. *Overview of interacting with the submitted data in the MBR Portal*
2. *Instruction of how to use the report functionalities*
3. *How to verify submission data by reviewing exported information*

2:30 p.m.–3:00 p.m.: Closing Remarks and Final Questions

[FR Doc. 2021–06255 Filed 3–25–21; 8:45 am]

BILLING CODE 6717–01–P

DEPARTMENT OF ENERGY

Federal Energy Regulatory Commission

Combined Notice of Filings 1

Take notice that the Commission received the following exempt wholesale generator filings:

Docket Numbers: EG21–110–000.
Applicants: Swoose LLC.
Description: Notice of Self-Certification of Exempt Wholesale Generator Status of Swoose LLC.
Filed Date: 3/18/21.
Accession Number: 20210318–5279.
Comments Due: 5 p.m. ET 4/8/21.

Docket Numbers: EG21–111–000.
Applicants: Flower Valley LLC.
Description: Flower Valley LLC Notice of Self-Certification of Exempt Wholesale Generator Status.
Filed Date: 3/18/21.
Accession Number: 20210318–5287.
Comments Due: 5 p.m. ET 4/8/21.

Take notice that the Commission received the following electric rate filings:

Docket Numbers: ER19–2547–002.
Applicants: Pheasant Run Wind, LLC.
Description: Compliance filing: Compliance filing for Docket ER19–2547 to be effective 10/1/2019.
Filed Date: 3/19/21.
Accession Number: 20210319–5076.
Comments Due: 5 p.m. ET 4/9/21.

Docket Numbers: ER20–1936–003.
Applicants: Walnut Ridge Wind, LLC.
Description: Compliance filing: Reactive Power Compliance Filing to be effective 6/1/2020.
Filed Date: 3/18/21.
Accession Number: 20210318–5184.
Comments Due: 5 p.m. ET 4/8/21.

Docket Numbers: ER20–1970–001.
Applicants: Diamond Spring, LLC.
Description: Supplement to January 28, 2021 Notice of Change in Status of Diamond Spring, LLC.
Filed Date: 3/19/21.
Accession Number: 20210319–5155.
Comments Due: 5 p.m. ET 4/9/21.

Docket Numbers: ER20–2125–000.
Applicants: WGP Redwood Holdings, LLC.
Description: Response to the January 15, 2021 Order of WGP Redwood Holdings, LLC tariff filing.
Filed Date: 3/18/21.
Accession Number: 20210318–5183.
Comments Due: 5 p.m. ET 4/8/21.

Docket Numbers: ER21–682–001.
Applicants: Basin Electric Power Cooperative.
Description: Tariff Amendment: Basin Electric Response to February 16, 2021 Deficiency Letter to be effective 1/1/2021.
Filed Date: 3/18/21.
Accession Number: 20210318–5203.
Comments Due: 5 p.m. ET 4/8/21.

Docket Numbers: ER21–768–001.
Applicants: Basin Electric Power Cooperative.
Description: Tariff Amendment: Basin Electric Response to February 16, 2021 Deficiency Letter to be effective 1/1/2021.
Filed Date: 3/18/21.
Accession Number: 20210318–5187.
Comments Due: 5 p.m. ET 4/8/21.

Docket Numbers: ER21–1473–000.
Applicants: The Empire District Electric Company.
Description: § 205(d) Rate Filing: Amendment to Transmission Formula Rate to be effective 5/14/2021.
Filed Date: 3/18/21.
Accession Number: 20210318–5176.
Comments Due: 5 p.m. ET 4/8/21.

Docket Numbers: ER21–1474–000.
Applicants: KEI MASS ENERGY STORAGE I, LLC.
Description: Baseline eTariff Filing: Market-Based Rate Application and Request for Expedited Action to be effective 3/19/2021.
Filed Date: 3/18/21.
Accession Number: 20210318–5194.
Comments Due: 5 p.m. ET 4/8/21.

Docket Numbers: ER21–1475–000.
Applicants: Orange and Rockland Utilities, Inc.
Description: § 205(d) Rate Filing: Attachment J—Municipal Underground Surcharge Revision to be effective 4/1/2021.
Filed Date: 3/19/21.
Accession Number: 20210319–5032.
Comments Due: 5 p.m. ET 4/9/21.

Docket Numbers: ER21–1476–000.
Applicants: Sierra Pacific Power Company.
Description: § 205(d) Rate Filing: Service Agreement No. 21–00011; SPPC Liberty to be effective 5/19/2021.
Filed Date: 3/19/21.
Accession Number: 20210319–5088.
Comments Due: 5 p.m. ET 4/9/21.

Docket Numbers: ER21–1477–000.
Applicants: Southern California Edison Company.
Description: § 205(d) Rate Filing: Letter Agreement Placerita Energy Storage Project SA No. 1138 to be effective 3/20/2021.
Filed Date: 3/19/21.
Accession Number: 20210319–5089.
Comments Due: 5 p.m. ET 4/9/21.

Docket Numbers: ER21–1478–000.
Applicants: PJM Interconnection, L.L.C.
Description: § 205(d) Rate Filing: Amendment to ISA/CSA Nos. 4810 & 4811; Queue No. AA2–103 to be effective 9/27/2017.

Filed Date: 3/19/21.
Accession Number: 20210319–5102.
Comments Due: 5 p.m. ET 4/9/21.

Docket Numbers: ER21–1479–000.
Applicants: Southern California Edison Company.
Description: Tariff Cancellation: Notice of Termination of Service Agreement No. 258 Terra-Gen, Sanborn Hybrid 3 to be effective 3/12/2021.
Filed Date: 3/19/21.
Accession Number: 20210319–5105.
Comments Due: 5 p.m. ET 4/9/21.

Docket Numbers: ER21–1480–000.
Applicants: Tri-State Generation and Transmission Association, Inc.
Description: Tariff Cancellation: Notice of Cancellation of Rate Schedule No. 232 to be effective 6/30/2021.
Filed Date: 3/19/21.
Accession Number: 20210319–5110.
Comments Due: 5 p.m. ET 4/9/21.

Docket Numbers: ER21–1481–000.
Applicants: Idaho Power Company.
Description: § 205(d) Rate Filing: CF Conversion to Bridge—Part II, Section 15 and 22 to be effective 5/28/2021.
Filed Date: 3/19/21.
Accession Number: 20210319–5116.
Comments Due: 5 p.m. ET 4/9/21.

Docket Numbers: ER21–1482–000.
Applicants: Riverstart Solar Park LLC.
Description: § 205(d) Rate Filing: Revised Market-Based Rate Tariff to be effective 3/20/2021.
Filed Date: 3/19/21.
Accession Number: 20210319–5122.
Comments Due: 5 p.m. ET 4/9/21.

Docket Numbers: ER21–1483–000.
Applicants: Tri-State Generation and Transmission Association, Inc.
Description: § 205(d) Rate Filing: Rate Schedule FERC No. 324 between Tri-State and SLVREC to be effective 7/1/2021.
Filed Date: 3/19/21.
Accession Number: 20210319–5134.
Comments Due: 5 p.m. ET 4/9/21.

Docket Numbers: ER21–1484–000.
Applicants: Duke Energy Carolinas, LLC, Duke Energy Progress, LLC.
Description: § 205(d) Rate Filing: Revisions to Joint OATT Formula Rates—Recovery of DEP 2019 Storm Costs to be effective 5/19/2021.
Filed Date: 3/19/21.
Accession Number: 20210319–5149.
Comments Due: 5 p.m. ET 4/9/21.

Docket Numbers: ER21–1485–000.
Applicants: California Independent System Operator Corporation.
Description: § 205(d) Rate Filing: 2021–03–19 ESDER 4 to be effective 5/19/2021.
Filed Date: 3/19/21.
Accession Number: 20210319–5156.
Comments Due: 5 p.m. ET 4/9/21.

Docket Numbers: ER21–1486–000.
Applicants: Duke Energy Carolinas, LLC.
Description: § 205(d) Rate Filing: Wholesale Contract Revisions to Rate Schedule No. 326 to be effective 1/1/2021.
Filed Date: 3/19/21.
Accession Number: 20210319–5181.
Comments Due: 5 p.m. ET 4/9/21.

Docket Numbers: ER21–1487–000.
Applicants: California Independent System Operator Corporation.
Description: § 205(d) Rate Filing: 2021–03–19 ESDER Phase 4 to be effective 5/19/2021.
Filed Date: 3/19/21.
Accession Number: 20210319–5190.
Comments Due: 5 p.m. ET 4/9/21.

Docket Numbers: ER21–1488–000.
Applicants: Luna Storage, LLC.
Description: Baseline eTariff Filing: Luna Storage, LLC MBR Tariff to be effective 3/20/2021.
Filed Date: 3/19/21.
Accession Number: 20210319–5211.
Comments Due: 5 p.m. ET 4/9/21.

The filings are accessible in the Commission's eLibrary system by clicking on the links or querying the docket number.

Any person desiring to intervene or protest in any of the above proceedings must file in accordance with Rules 211 and 214 of the Commission's Regulations (18 CFR 385.211 and § 385.214) on or before 5:00 p.m. Eastern time on the specified comment date. Protests may be considered, but intervention is necessary to become a party to the proceeding.

eFiling is encouraged. More detailed information relating to filing requirements, interventions, protests, service, and qualifying facilities filings can be found at: *http://www.ferc.gov/docs-filing/efiling/filing-req.pdf.* For other information, call (866) 208–3676 (toll free). For TTY, call (202) 502–8659.

Dated: March 19, 2021.

Kimberly D. Bose,

Secretary.

[FR Doc. 2021–06253 Filed 3–25–21; 8:45 am]

BILLING CODE 6717–01–P

DEPARTMENT OF ENERGY

Federal Energy Regulatory Commission

[Project No. 11478–021]

Green Mountain Power; Notice of Application Accepted for Filing and Soliciting Comments, Motions To Intervene, and Protests

Take notice that the following hydroelectric application has been filed with the Commission and is available for public inspection:

a. *Application Type:* Amend license to temporarily lower reservoir and replace outlet conduit.
b. *Project No:* 11478–021.
c. *Date Filed:* March 18, 2021.
d. *Applicant:* Green Mountain Power.
e. *Name of Project:* Silver Lake.
f. *Location:* Sucker Brook, Addison County, Vermont.
g. *Filed Pursuant to:* Federal Power Act, 16 U.S.C. 791a–825r.
h. *Applicant Contact:* John Greenan, Green Mountain Power Corporation, 2152 Post Road, Rutland, VT 05701, (802) 770–2195.
i. *FERC Contact:* David Rudisail, (202) 502–6376, *david.rudisail@ferc.gov.*
j. *Deadline for filing comments, motions to intervene, and protests:* April 6, 2021.

The Commission strongly encourages electronic filing. Please file comments, motions to intervene, and protests using the Commission's eFiling system at *http://www.ferc.gov/docs-filing/efiling.asp.* Commenters can submit brief comments up to 6,000 characters, without prior registration, using the eComment system at *http://www.ferc.gov/docs-filing/ecomment.asp.* You must include your name and contact information at the end of your comments. For assistance, please contact FERC Online Support at *FERCOnlineSupport@ferc.gov,* (866) 208–3676 (toll free), or (202) 502–8659 (TTY). In lieu of electronic filing, you may submit a paper copy. Submissions sent via the U.S. Postal Service must be addressed to: Kimberly D. Bose, Secretary, Federal Energy Regulatory Commission, 888 First Street NE, Room 1A, Washington, DC 20426. Submissions sent via any other carrier must be addressed to: Kimberly D. Bose, Secretary, Federal Energy Regulatory Commission, 12225 Wilkins Avenue, Rockville, Maryland 20852. The first page of any filing should include the docket number P–11478–021. Comments emailed to Commission staff are not considered part of the Commission record.

The Commission's Rules of Practice and Procedure require all intervenors filing documents with the Commission to serve a copy of that document on each person whose name appears on the official service list for the project. Further, if an intervenor files comments or documents with the Commission relating to the merits of an issue that may affect the responsibilities of a particular resource agency, they must also serve a copy of the document on that resource agency.

k. Green Mountain Power proposes to temporarily lower the Sugar Hill Reservoir approximately 27.5 feet from the current elevation to allow replacement of the outlet conduit.

l. *Locations of the Application:* This filing may be viewed on the Commission's website at *http://www.ferc.gov* using the ''eLibrary'' link. Enter the docket number excluding the last three digits in the docket number field to access the document. You may also register online at *http://www.ferc.gov/docs-filing/esubscription.asp* to be notified via email of new filings and issuances related to this or other pending projects. For assistance, call 1–866–208–3676 or email *FERCOnlineSupport@ferc.gov,* for TTY, call (202) 502–8659. Agencies may obtain copies of the application directly from the applicant.

m. Individuals desiring to be included on the Commission's mailing list should so indicate by writing to the Secretary of the Commission.

n. *Comments, Protests, or Motions to Intervene:* Anyone may submit comments, a protest, or a motion to intervene in accordance with the requirements of Rules of Practice and Procedure, 18 CFR 385.210, .211, .214, respectively. In determining the appropriate action to take, the Commission will consider all protests or other comments filed, but only those who file a motion to intervene in accordance with the Commission's Rules may become a party to the proceeding. Any comments, protests, or motions to intervene must be received on or before the specified comment date for the particular application.

o. *Filing and Service of Documents:* Any filing must (1) bear in all capital letters the title ''COMMENTS'', ''PROTEST'', or ''MOTION TO INTERVENE'' as applicable; (2) set forth in the heading the name of the applicant and the project number of the application to which the filing responds; (3) furnish the name, address, and telephone number of the person commenting, protesting or intervening; and (4) otherwise comply with the requirements of 18 CFR 385.2001 through 385.2005. All comments, motions to intervene, or protests must set forth their evidentiary basis. Any filing made by an intervenor must be accompanied by proof of service on all persons listed in the service list prepared by the Commission in this proceeding, in accordance with 18 CFR 385.2010.

Dated: March 22, 2021.

Kimberly D. Bose,

Secretary.

[FR Doc. 2021–06304 Filed 3–25–21; 8:45 am]

BILLING CODE 6717–01–P

DEPARTMENT OF ENERGY

Federal Energy Regulatory Commission

[Docket No. CP17–101–000]

Transcontinental Gas Pipe Line Company, LLC; Notice of Request for Extension of Time

Take notice that on March 19, 2021, Transcontinental Gas Pipe Line Company, LLC (Transco) requested that the Federal Energy Regulatory Commission (Commission) grant an extension of time until May 3, 2023 to complete construction of, and place into service, its Northeast Supply Enhancement (NESE) Project located in Pennsylvania, onshore and offshore New Jersey, and offshore New York as authorized in the Order Issuing Certificate (Order) on May 3, 2019.[1] Ordering Paragraph (B)(1) of the Order required Transco to complete the construction of the NESE Project facilities and make them available for service within two years of the date of the Order, or by May 3, 2021.

On May 15, 2020, the New York State Department of Environmental Conservation (NYSDEC) denied Transco's application for a water quality certification under section 401 of the Clean Water Act. Simultaneously, the New Jersey Department of Environmental Protection denied Transco's application for a water quality certification and other individual permits. As part of its denial, NYSDEC cites lack of demand for the NESE Project. Transco asserts that the market disruption caused by the COVID–19 pandemic is temporary and a need for additional firm transportation remains. Transco states that its binding precedent agreement with National Grid remains in full force and effect and Transco remains fully committed to constructing the NESE Project. Transco avers the COVID–19 pandemic is also having a direct and adverse impact on state and local areas resources and Transco's development of the NESE Project. Moreover, Transco states that it plans to refile its section 401 applications later this year. Transco avers that postponement of the in-service date for the NESE Project has no impact on the public interest findings in the Order and the environmental record is current and relevant. Accordingly, Transco now requests an additional two years, or until May 3, 2023, to complete the construction of the NESE Project and make it available for service.

This notice establishes a 15-calendar day intervention and comment period deadline. Any person wishing to comment on Transco's request for an extension of time may do so. No reply comments or answers will be considered. If you wish to obtain legal status by becoming a party to the proceedings for this request, you should, on or before the comment date stated below, file a motion to intervene in accordance with the requirements of the Commission's Rules of Practice and Procedure (18 CFR 385.214 or 385.211) and the Regulations under the Natural Gas Act (18 CFR 157.10).[2]

As a matter of practice, the Commission itself generally acts on requests for extensions of time to complete construction for Natural Gas Act facilities when such requests are contested before order issuance. For those extension requests that are contested,[3] the Commission will aim to issue an order acting on the request within 45 days.[4] The Commission will address all arguments relating to whether the applicant has demonstrated there is good cause to grant the extension.[5] The Commission will not consider arguments that re-litigate the issuance of the Order, including whether the Commission properly found the project to be in the public convenience and necessity and whether the Commission's environmental analysis for the certificate complied with the National Environmental Policy Act.[6] At the time a pipeline requests an extension of time, orders on certificates of public convenience and necessity are final and the Commission will not re-litigate their issuance.[7] The OEP Director, or his or her designee, will act

[1] *Transcontinental Gas Pipe Line Company, LLC,* 167 FERC ¶ 61,110 (2019).

[2] Only motions to intervene from entities that were party to the underlying proceeding will be accepted. *Algonquin Gas Transmission, LLC,* 170 FERC ¶ 61,144, at P 39 (2020).

[3] Contested proceedings are those where an intervenor disputes any material issue of the filing. 18 CFR 385.2201(c)(1) (2020).

[4] *Algonquin Gas Transmission, LLC,* 170 FERC ¶ 61,144, at P 40 (2020).

[5] *Id.* P 40.

[6] Similarly, the Commission will not re-litigate the issuance of an NGA section 3 authorization, including whether a proposed project is not inconsistent with the public interest and whether the Commission's environmental analysis for the permit order complied with NEPA.

[7] *Algonquin Gas Transmission, LLC,* 170 FERC ¶ 61,144, at P 40 (2020).

on those extension requests that are uncontested.

In addition to publishing the full text of this document in the **Federal Register**, the Commission provides all interested persons an opportunity to view and/or print the contents of this document via the internet through the Commission's Home Page (*http://ferc.gov*) using the ''eLibrary'' link. Enter the docket number excluding the last three digits in the docket number field to access the document. At this time, the Commission has suspended access to the Commission's Public Reference Room, due to the proclamation declaring a National Emergency concerning COVID–19, issued by the President on March 13, 2020. For assistance, contact FERC at *FERCOnlineSupport@ferc.gov* or call toll-free, (886) 208–3676 or TYY, (202) 502–8659.

The Commission strongly encourages electronic filings of comments, protests and interventions in lieu of paper using the ''eFile'' link at *http://www.ferc.gov.* Persons unable to file electronically may mail similar pleadings to the Federal Energy Regulatory Commission. To mail via USPS, use the following address: Kimberly D. Bose, Secretary, Federal Energy Regulatory Commission, 888 First Street NE, Washington, DC 20426. To mail via any other courier, use the following address: Kimberly D. Bose, Secretary, Federal Energy Regulatory Commission, 12225 Wilkins Avenue, Rockville, Maryland 20852.

Comment Date: 5:00 p.m. Eastern Time on April 6, 2021.

Dated: March 22, 2021.

Kimberly D. Bose,

Secretary.

[FR Doc. 2021–06309 Filed 3–25–21; 8:45 am]

BILLING CODE 6717–01–P

ENVIRONMENTAL PROTECTION AGENCY

[ER–FRL–9055–8]

Environmental Impact Statements; Notice of Availability

Responsible Agency: Office of Federal Activities, General Information 202–564–5632 or *https://www.epa.gov/nepa.*

Weekly receipt of Environmental Impact Statements (EIS)

Filed March 15, 2021 10 a.m. EST Through March 22, 2021 10 a.m. EST

Pursuant to 40 CFR 1506.9.

Notice: Section 309(a) of the Clean Air Act requires that EPA make public its comments on EISs issued by other Federal agencies. EPA's comment letters on EISs are available at: *https://cdxnodengn.epa.gov/cdx-enepa-public/action/eis/search.*

EIS No. 20210034, Final, NPS, NY, Adoption—Fire Island Inlet to Montauk Point Reformulation Study, Contact: Joe Neubauer 215–597–1903.

The National Park Service (NPS) has adopted the Army Corps of Engineers Final EIS No. 20200043, filed 2/14/2020 with EPA. NPS was a cooperating agency on this project. Therefore, republication of the document is not necessary under Section 1506.3(b)(2) of the CEQ regulations.

EIS No. 20210035, Final, NPS, NC, Cape Hatteras National Seashore Sediment Management Framework, Review Period Ends: 04/26/2021, Contact: Dave Hallac 252–475–9032.

EIS No. 20210036, Final, BR, WA, Leavenworth National Fish Hatchery Surface Water Intake Fish Screens and Fish Passage Project, Review Period Ends: 04/26/2021, Contact: Jason Sutter 208–378–5390.

EIS No. 20210037, Draft, USACE, MT, Fort Peck Dam Test Releases, Comment Period Ends: 05/25/2021, Contact: Aaron Quinn 402–995–2669.

Dated: March 22, 2021.

Cindy S. Barger,

Director, NEPA Compliance Division, Office of Federal Activities.

[FR Doc. 2021–06280 Filed 3–25–21; 8:45 am]

BILLING CODE 6560–50–P

ENVIRONMENTAL PROTECTION AGENCY

[FRL 10022–02–Region 3]

Notice of Administrative Settlement Agreement and Order on Consent for Response Action by Prospective Purchaser

AGENCY: Environmental Protection Agency (EPA).

ACTION: Notice; request for public comment.

SUMMARY: In accordance with the requirements of the Resource Conservation and Recovery Act, as amended by the Hazardous and Solid Waste Amendments (RCRA), and the Comprehensive Environmental Response, Compensation, and Liability Act of 1980, as amended (CERLCA), notice is hereby given by the U.S. Environmental Protection Agency (EPA), of an Administrative Settlement Agreement and Order on Consent for Response Action by Prospective Purchaser (Settlement Agreement), with NP Falls Township Industrial 2, LLC (Purchaser). The Settlement Agreement pertains to Purchaser's acquisition of a 342.97-acre property (Property) at the 2799-acre U.S. Steel Mon Valley Works—Fairless Hills Facility, located at S Pennsylvania Avenue, Fairless Hills, PA (Facility). The Settlement Agreement requires performance of specified cleanup activities pursuant to EPA's RCRA corrective action program at the Property and establishment of financial assurance for the benefit of EPA to ensure completion of the cleanup work. In return, the Settlement Agreement will resolve potential claims of the United States government for cleanup at the Facility under RCRA and CERCLA.

DATES: Comments must be submitted on or before April 26, 2021.

ADDRESSES: The proposed Settlement Agreement is available at: *https://www.epa.gov/sites/production/files/2020-12/documents/us_steel_northpoint_2_ppa_final_.pdf.* Comments should be submitted to Linda Matyskiela, Remedial Project Manager, EPA Region 3, Mail Code 3LD20, 1650 Arch Street, Philadelphia, PA 19103, (215) 814–3420, *Matyskiela.Linda@epa.gov* and should reference the Settlement Agreement.

You may also send comments, identified by Docket ID No. CERCLA–RCRA–03–2021–0051PP to *http://www.regulations.gov.* Follow the online instructions for submitting comments.

FOR FURTHER INFORMATION CONTACT: Thomas A. Cinti, Senior Assistant Regional Counsel, Office of Regional Counsel, EPA Region III, Mail Code 3RC20, 1650 Arch Street, Philadelphia, PA 19103, (215) 814–2634, *Cinti.Thomas@epa.gov.*

SUPPLEMENTARY INFORMATION: EPA will receive written comments relating to the Settlement Agreement. EPA will consider all comments received and may modify or withdraw its consent to the Settlement Agreement if comments received disclose facts or considerations that indicate that the Settlement Agreement is inappropriate, improper, or inadequate. Once submitted, comments cannot be edited or removed from *Regulations.gov.* EPA may publish any comment received to its public docket. Do not submit electronically any information you consider to be Confidential Business Information (CBI) or other information whose disclosure is restricted by statute. If CBI exists, please contact Ms. Linda Matyskiela. Multimedia submissions (audio, video, etc.) must be accompanied by a written comment. The written comment is considered the official comment and should include discussion of all points

you wish to make. EPA will generally not consider comments or comment contents located outside of the primary submission (*i.e.,* on the web, cloud, or other file sharing system). For additional submission methods, the full EPA public comment policy, information about CBI or multimedia submissions, and general guidance on making effective comments, please visit *https://www.epa.gov/dockets/commenting-epa-dockets.* EPA's response to any comments received will be available for public inspection at EPA Region III, 1650 Arch Street, Philadelphia, PA 19103.

Stacie Driscoll,

Acting Director, Land, Chemicals and Redevelopment Division, EPA Region III.

[FR Doc. 2021–06308 Filed 3–25–21; 8:45 am]

BILLING CODE 6560–50–P

ENVIRONMENTAL PROTECTION AGENCY

[EPA–HQ–OEI–2017–0380; FRL–10022–20–OMS]

Information Collection Request Submitted to OMB for Review and Approval; Comment Request; Generic Clearance for the Collection of Qualitative Feedback on Agency Service Delivery (Renewal)

AGENCY: Environmental Protection Agency (EPA).

ACTION: Notice.

SUMMARY: The Environmental Protection Agency (EPA) has submitted an information collection request (ICR), Generic Clearance for the Collection of Qualitative Feedback on Agency Service Delivery (EPA ICR Number 2434.99, OMB Control Number 2010–0042) to the Office of Management and Budget (OMB) for review and approval in accordance with the Paperwork Reduction Act. This is a proposed extension of the ICR, which is currently approved through March 31, 2021. Public comments were previously requested via the **Federal Register** on July 16, 2020 during a 60-day comment period. This notice allows for an additional 30 days for public comments. A fuller description of the ICR is given below, including its estimated burden and cost to the public. An agency may not conduct or sponsor and a person is not required to respond to a collection of information unless it displays a currently valid OMB control number.

DATES: Additional comments may be submitted on or before April 26, 2021.

ADDRESSES: Submit your comments to EPA, referencing Docket ID No. EPA–HQ–OEI–2017–0380, online using *www.regulations.gov* (our preferred method), by email to *docket_oms@epa.gov,* or by mail to: EPA Docket Center, Environmental Protection Agency, Mail Code 28221T, 1200 Pennsylvania Ave. NW, Washington, DC 20460. EPA's policy is that all comments received will be included in the public docket without change including any personal information provided, unless the comment includes profanity, threats, information claimed to be Confidential Business Information (CBI), or other information whose disclosure is restricted by statute.

Submit written comments and recommendations to OMB for the proposed information collection within 30 days of publication of this notice to *www.reginfo.gov/public/do/PRAMain.* Find this particular information collection by selecting ''Currently under 30-day Review—Open for Public Comments'' or by using the search function.

FOR FURTHER INFORMATION CONTACT: Mark Purdy, Office of Mission Support, Regulatory Support Division, 2822T, Environmental Protection Agency, 1200 Pennsylvania Ave. NW, Washington, DC 20460; telephone number: 202–566–2792; email address: *mpurdy@epa.gov.*

SUPPLEMENTARY INFORMATION: Supporting documents which explain in detail the information that the EPA will be collecting are available in the public docket for this ICR. The docket can be viewed online at *www.regulations.gov* or in person at the EPA Docket Center, WJC West, Room 3334, 1301 Constitution Ave. NW, Washington, DC. The telephone number for the Docket Center is 202–566–1744. For additional information about EPA's public docket, visit *http://www.epa.gov/dockets.*

Abstract: The information collection activity provides the Agency with an opportunity to efficiently engage its customers and stakeholders by gathering qualitative information about their interaction with Agency. Getting such feedback in a timely manner is critical if the Agency is to know how and where it should focus while seeking to improve, or expand upon, its products and services.

The Agency will submit a collection request for approval under this generic clearance only if the collections are: Voluntary; low burden and low-cost for both the respondents and the Federal Government; noncontroversial; targeted to respondents who have experience with the program or may have experience with the program in the near future; and abstain from collecting personally identifiable information (PII) to the greatest extent possible. Information gathered will be used internally for general service improvement and program management purposes and released publicly only in an anonymized or aggregated fashion. It will not be used in statistical analysis intended to yield results that can be generalized to the population of study nor will it be used to substantially inform influential policy decisions.

Form Numbers: None.

Respondents/affected entities: Individuals and Households; Businesses and Organizations; State, Local or Tribal Government.

Respondent's obligation to respond: Voluntary.

Estimated number of respondents: 180,000 (total).

Frequency of response: Once per request.

Total estimated burden: 45,000 hours (total). Burden is defined at 5 CFR 1320.03(b).

Total estimated cost: There are no annualized capital or operation & maintenance costs.

Changes in the estimates: There is an increase of 15,000 hours in the total estimated respondent burden compared with the ICR currently approved by OMB. This requested increase is made in anticipation of continued growth in the Agency's use this collection to survey the public on its delivery of services.

Courtney Kerwin,

Director, Regulatory Support Division.

[FR Doc. 2021–06312 Filed 3–25–21; 8:45 am]

BILLING CODE 6560–50–P

ENVIRONMENTAL PROTECTION AGENCY

[FRL 10022–01–Region 3]

Notice of Administrative Settlement Agreement and Order on Consent for Response Action by Prospective Purchaser

AGENCY: Environmental Protection Agency (EPA).

ACTION: Notice; request for public comment.

SUMMARY: In accordance with the requirements of the Resource Conservation and Recovery Act, as amended by the Hazardous and Solid Waste Amendments (RCRA), and the Comprehensive Environmental Response, Compensation, and Liability Act of 1980, as amended (CERLCA), notice is hereby given by the U.S. Environmental Protection Agency (EPA), of an Administrative Settlement

Agreement and Order on Consent for Response Action by Prospective Purchaser (Settlement Agreement), with NP Falls Township Industrial, LLC (Purchaser). The Settlement Agreement pertains to Purchaser's acquisition of a 1517.15-acre property (Property) at the 2799-acre U.S. Steel Mon Valley Works—Fairless Hills Facility, located at S Pennsylvania Avenue, Fairless Hills, PA (Facility). The Settlement Agreement requires performance of specified cleanup activities pursuant to EPA's RCRA corrective action program at the Property and establishment of financial assurance for the benefit of EPA to ensure completion of the cleanup work. In return, the Settlement Agreement will resolve potential claims of the United States government for cleanup at the Facility under RCRA and CERCLA.

DATES: Comments must be submitted on or before April 26, 2021.

ADDRESSES: The proposed Settlement Agreement is available at: *https://www.epa.gov/sites/production/files/2020-12/documents/us_steel_northpoint_1_ppa_final.pdf.* Comments should be submitted to Linda Matyskiela, Remedial Project Manager, EPA Region 3, Mail Code 3LD20, 1650 Arch Street, Philadelphia, PA 19103, (215) 814–3420, *Matyskiela.Linda@epa.gov* and should reference the Settlement Agreement.

You may also send comments, identified by Docket ID No. CERCLA–RCRA–03–2021–0050PP to *http://www.regulations.gov.* Follow the online instructions for submitting comments.

FOR FURTHER INFORMATION CONTACT: Thomas A. Cinti, Senior Assistant Regional Counsel, Office of Regional Counsel, EPA Region III, Mail Code 3RC20, 1650 Arch Street, Philadelphia, PA 19103, (215) 814–2634, *Cinti.Thomas@epa.gov.*

SUPPLEMENTARY INFORMATION: EPA will receive written comments relating to the Settlement Agreement. EPA will consider all comments received and may modify or withdraw its consent to the Settlement Agreement if comments received disclose facts or considerations that indicate that the Settlement Agreement is inappropriate, improper, or inadequate. Once submitted, comments cannot be edited or removed from *Regulations.gov.* EPA may publish any comment received to its public docket. Do not submit electronically any information you consider to be Confidential Business Information (CBI) or other information whose disclosure is restricted by statute. If CBI exists, please contact Ms. Linda Matyskiela. Multimedia submissions (audio, video, etc.) must be accompanied by a written comment. The written comment is considered the official comment and should include discussion of all points you wish to make. EPA will generally not consider comments or comment contents located outside of the primary submission (*i.e.,* on the web, cloud, or other file sharing system). For additional submission methods, the full EPA public comment policy, information about CBI or multimedia submissions, and general guidance on making effective comments, please visit *https://www.epa.gov/dockets/commenting-epa-dockets.* EPA's response to any comments received will be available for public inspection at EPA Region III, 1650 Arch Street, Philadelphia, PA 19103.

Stacie Driscoll,

Acting Director, Land, Chemicals and Redevelopment Division, EPA Region III.

[FR Doc. 2021–06307 Filed 3–25–21; 8:45 am]

BILLING CODE 6560–50–P

FEDERAL DEPOSIT INSURANCE CORPORATION

FDIC Advisory Committee on Community Banking; Notice of Meeting

AGENCY: Federal Deposit Insurance Corporation (FDIC).

ACTION: Notice of Open Meeting.

SUMMARY: In accordance with the Federal Advisory Committee Act, notice is hereby given of a meeting of the FDIC Advisory Committee on Community Banking. The Advisory Committee will provide advice and recommendations on a broad range of policy issues that have particular impact on small community banks throughout the United States and the local communities they serve. The meeting is open to the public. Out of an abundance of caution related to current and potential coronavirus developments, the public's means to observe this Community Banking Advisory Committee meeting will be via a Webcast live on the internet. In addition, the meeting will be recorded and subsequently made available on-demand approximately two weeks after the event. To view the live event, visit *http://fdic.windrosemedia.com.* To view the recording, visit *http://fdic.windrosemedia.com/index.php?category=Community+Banking+Advisory+Committee.* If you require a reasonable accommodation to participate, please contact *DisabilityProgram@fdic.gov* or call 703–562–2096 to make necessary arrangements.

DATES: Tuesday, April 13, 2021, from 1:00 p.m. to 5:00 p.m.

FOR FURTHER INFORMATION CONTACT: Requests for further information concerning the meeting may be directed to Debra A. Decker, Committee Management Officer of the FDIC, at (202) 898–8748.

SUPPLEMENTARY INFORMATION:

Agenda: The agenda will include a discussion of current issues affecting community banking. The agenda is subject to change. Any changes to the agenda will be announced at the beginning of the meeting.

Type of Meeting: This meeting of the Advisory Committee on Community Banking will be Webcast live via the internet *http://fdic.windrosemedia.com.* For optimal viewing, a high-speed internet connection is recommended.

Federal Deposit Insurance Corporation.

Dated at Washington, DC, on March 23, 2021.

James P. Sheesley,

Assistant Executive Secretary.

[FR Doc. 2021–06268 Filed 3–25–21; 8:45 am]

BILLING CODE 6714–01–P

FEDERAL MINE SAFETY AND HEALTH REVIEW COMMISSION

Sunshine Act Meeting

TIME AND DATE: 10:00 a.m., Thursday, April 8, 2021.

PLACE: This meeting will be conducted through a videoconference involving all Commissioners. Any person wishing to listen to the proceeding may call the number listed below.

STATUS: Open.

MATTERS TO BE CONSIDERED: The Commission will consider and act upon the following in open session: *Secretary of Labor* v. *Peabody Midwest Mining, LLC,* Docket No. LAKE 2017–0450 (Questions to be considered include justiciability issues regarding the application of the ''significant and substantial'' test in this case.)

Any person attending this meeting who requires special accessibility features and/or auxiliary aids, such as sign language interpreters, must inform the Commission in advance of those needs. Subject to 29 CFR 2706.150(a)(3) and 2706.160(d).

CONTACT PERSON FOR MORE INFORMATION: Emogene Johnson, (202) 434–9935/(202) 708–9300 for TDD Relay/1–800–877–8339 for toll free.

Phone Number for Listening to Meeting: 1–(866) 236–7472.

Passcode: 678–100.

Authority: 5 U.S.C. 552b.

Dated: March 24, 2021.

Sarah L. Stewart,

Deputy General Counsel.

[FR Doc. 2021–06427 Filed 3–24–21; 4:15 pm]

BILLING CODE 6735–01–P

FEDERAL RESERVE SYSTEM

Change in Bank Control Notices; Acquisitions of Shares of a Bank or Bank Holding Company

The notificants listed below have applied under the Change in Bank Control Act (Act) (12 U.S.C. 1817(j)) and § 225.41 of the Board's Regulation Y (12 CFR 225.41) to acquire shares of a bank or bank holding company. The factors that are considered in acting on the applications are set forth in paragraph 7 of the Act (12 U.S.C. 1817(j)(7)).

The public portions of the applications listed below, as well as other related filings required by the Board, if any, are available for immediate inspection at the Federal Reserve Bank(s) indicated below and at the offices of the Board of Governors. This information may also be obtained on an expedited basis, upon request, by contacting the appropriate Federal Reserve Bank and from the Board's Freedom of Information Office at *https://www.federalreserve.gov/foia/request.htm.* Interested persons may express their views in writing on the standards enumerated in paragraph 7 of the Act.

Comments regarding each of these applications must be received at the Reserve Bank indicated or the offices of the Board of Governors, Ann E. Misback, Secretary of the Board, 20th Street and Constitution Avenue NW, Washington DC 20551–0001, not later than April 9, 2021.

A. Federal Reserve Bank of Minneapolis (Chris P. Wangen, Assistant Vice President), 90 Hennepin Avenue, Minneapolis, Minnesota 55480–0291:

1. *Debra Cheryl Connolly, Danvers, Minnesota;* to retain voting shares of West 12 Bancorporation, Inc., and thereby indirectly retain voting shares of State Bank of Danvers, both of Benson, Minnesota.

Board of Governors of the Federal Reserve System, March 23, 2021.

Michele Taylor Fennell,

Deputy Associate Secretary of the Board.

[FR Doc. 2021–06276 Filed 3–25–21; 8:45 am]

BILLING CODE P

GENERAL SERVICES ADMINISTRATION

[Notice–CRE–2021–01; Docket No. 2021–0002; Sequence No. 4]

Office of Human Resources Management; SES Performance Review Board

AGENCY: Office of Human Resources Management (OHRM), General Services Administration (GSA).

ACTION: Notice.

SUMMARY: Notice is hereby given of the appointment of new members to the GSA Senior Executive Service Performance Review Board. The Performance Review Board assures consistency, stability, and objectivity in the performance appraisal process.

DATES: *Applicable:* March 26, 2021.

FOR FURTHER INFORMATION CONTACT: Ms. Shonna James, Director, Executive Resources HR Services Center, Office of Human Resources Management, General Services Administration, 1800 F Street NW, Washington, DC 20405, (202)809–2745.

SUPPLEMENTARY INFORMATION: Section 4314(c)(1) through (5) of title 5 U.S.C. requires each agency to establish, in accordance with regulation prescribed by the Office of Personnel Management, one or more SES performance review board(s). The board is responsible for making recommendations to the appointing and awarding authority on the performance appraisal ratings and performance awards for employees in the Senior Executive Service.

The following have been designated as members of the Performance Review Board of GSA:

- Katy Kale, Deputy Administrator—PRB Chair.
- Christopher Bennethum, Assistant Commissioner for Assisted Acquisition Services, Federal Acquisition Service.
- Lesley Briante, Associate CIO for Enterprise Planning & Governance, Office of GSA IT.
- Krystal Brumfield, Associate Administrator for Governmentwide Policy, Office of Governmentwide Policy.
- Traci DiMartini, Chief Human Capital Officer, Office of Human Resources Management.
- Tiffany Hixson, Regional Commissioner, Federal Acquisition Service, Northwest/Arctic Region.
- Flavio Peres, Assistant Commissioner for Real Property Utilization and Disposal, Public Buildings Service.
- Joanna Rosato, Regional Commissioner, Public Buildings Service, Mid-Atlantic Region.
- Kevin Rothmier, Regional Commissioner, Public Buildings Service, The Heartland Region.
- Camille Sabbakhan, Associate General Counsel for Real Property, Office of General Counsel.
- Houston Taylor, Regional Commissioner, Federal Acquisition Service, National Capital Region.

Katy Kale,

Acting Administrator, General Services Administration.

[FR Doc. 2021–06317 Filed 3–25–21; 8:45 am]

BILLING CODE 6820–FM–P

GENERAL SERVICES ADMINISTRATION

[Notice–MG–2021–02; Docket No. 2021–0002; Sequence No. 5]

Office of Federal High-Performance Green Buildings; Green Building Advisory Committee; Notification of Upcoming Web-Based Meetings

AGENCY: Office of Government-wide Policy, General Services Administration (GSA).

ACTION: Notice of public meetings.

SUMMARY: Notice of these web-based public meetings/conference calls is being provided according to the requirements of the Federal Advisory Committee Act. This notice provides the schedule for a series of web-based meetings for two task groups of the Green Building Advisory Committee (Committee), as well as one full Committee meeting, which are all open to the public. Interested individuals must register to attend and provide public comment as instructed below under **SUPPLEMENTARY INFORMATION**.

DATES: The Environmental Justice and Equity for Federal Green Buildings Task Group will hold recurring web-based meetings on Tuesdays from April 6, 2021, through November 16, 2021, from 4:00 p.m. to 5:00 p.m., Eastern Time (ET).

The Federal Building Decarbonization Task Group will hold recurring web-based meetings on Mondays from April 5, 2021, through November 15, 2021, from 3:00 p.m. to 4:00 p.m., ET.

The Green Building Advisory Committee will hold a web-based meeting on Wednesday, June 23, 2021, from 2:00 p.m. to 5:00 p.m.

FOR FURTHER INFORMATION CONTACT: Dr. Ken Sandler, Designated Federal Officer, Office of Federal High-Performance Green Buildings, Office of Government-wide Policy, General Services Administration, 1800 F Street NW, (Mail-code: MG), Washington, DC

20405, at *ken.sandler@gsa.gov* or 202–219–1121. Additional information about the Committee, including meeting materials and agendas, will be available on-line at *http://www.gsa.gov/gbac.*

SUPPLEMENTARY INFORMATION:

Procedures for Attendance and Public Comment

Contact Dr. Ken Sandler, at *ken.sandler@gsa.gov,* to register to attend any of these public web-based meetings. To register, submit your full name, organization, email address, phone number, and which meeting(s) you would like to attend. Requests to attend the web-based meetings must be received by 5:00 p.m. ET, on Monday, April 5, 2021. Meeting call-in information will be provided to interested parties who register by the deadline. (GSA will be unable to provide technical assistance to any listener experiencing technical difficulties. Testing access to the web-based meeting site before the meetings is recommended.) Contact Dr. Sandler to register to provide public comment during the June 23, 2021 meeting public comment period. Registered speakers/organizations will be allowed a maximum of five minutes each and will need to provide written copies of their presentations. Requests to provide public comment at the Committee meeting must be received by 5:00 p.m., ET, on Monday, June 7, 2021.

Background

The Administrator of GSA established the Committee on June 20, 2011 (**Federal Register**/Vol. 76, No. 118) pursuant to Section 494 of the Energy Independence and Security Act of 2007 (EISA, 42 U.S.C. 17123). Under this authority, the Committee provides independent policy advice and recommendations to GSA to advance federal building innovations in planning, design, and operations to reduce costs, enable agency missions, enhance human health and performance, and minimize environmental impacts.

The Environmental Justice and Equity for Federal Green Buildings Task Group will identify and propose effective approaches to improve environmental justice and equity in federal sustainable building processes, enhancing engagement with communities and key partners throughout the building lifecycle.

The Federal Building Decarbonization Task Group will explore opportunities and challenges for reducing greenhouse gas emissions, in alignment with national climate goals and action plans, through the use of renewable energy, energy efficiency, electrification and smart building technologies at federal facilities.

These web-based meetings will allow the task groups to develop consensus recommendations for deliberation by the full Committee, which will, in turn, decide whether to proceed with formal advice to GSA based upon these recommendations.

June 23, 2021 Meeting Agenda

- Updates and introductions
- Energy Storage Task Group: Findings & recommendations
- Environmental Justice and Equity Task Group: Interim findings
- Federal Building Decarbonization Task Group: Interim findings
- Public comment
- Next steps and closing comments

Kevin Kampschroer,

Federal Director, Office of Federal High-Performance Green Buildings, Office of Government-wide Policy, General Services Administration.

[FR Doc. 2021–06221 Filed 3–25–21; 8:45 am]

BILLING CODE 6820–14–P

GOVERNMENT ACCOUNTABILITY OFFICE

Notice of Methodology for Estimating Lump Sum Catch-Up Payments to Eligible 9/11 Victims, 9/11 Spouses and 9/11 Dependents; Request for Comment

AGENCY: U.S. Government Accountability Office (GAO).

ACTION: Notice of methodology; request for comment.

SUMMARY: GAO is now accepting comments on our methodology for estimating potential lump sum catch-up payments to certain 9/11 victims, 9/11 spouses, and 9/11 dependents who have submitted eligible claims for payment from the United States Victims of State Sponsored Terrorism Fund. GAO is conducting an audit and publishing this notice pursuant to the Sudan Claims Resolution Act. Comments should be sent to the email address below.

DATES: Interested persons are invited to submit comments on or before April 26, 2021.

ADDRESSES: Submit comments to *FundPaymentComments@gao.gov* or in writing to Mr. Charles Michael Johnson, Jr. at 441 G Street NW, Washington, DC 20548.

FOR FURTHER INFORMATION CONTACT: Charles Michael Johnson Jr. at (202) 512–7500 or *JohnsonCM@gao.gov* if you need additional information. For general information, contact GAO's Office of Public Affairs, 202–512–4800.

SUPPLEMENTARY INFORMATION: Pursuant to Section 1705 of the Sudan Claims Resolution Act, GAO is conducting an audit and publishing this notice of our methodology for estimating potential lump sum catch-up payments to 9/11 victims, 9/11 spouses, and 9/11 dependents [1] who have eligible claims for payment from the United States Victims of State Sponsored Terrorism Fund (Fund), established in 2015 by the Justice for United States Victims of State Sponsored Terrorism Act (Terrorism Act).[2] While the Terrorism Act, as amended, contains a provision for us to estimate these catch-up payments, it does not currently authorize such catch-up payments to be made. The Fund is administered by a Special Master appointed by the Attorney General and supported by Department of Justice personnel.[3]

For purposes of the Fund, the term ''claim'' generally refers to a claim based on compensatory damages awarded to a United States person in a final judgment issued by a United States district court under State or Federal law against a foreign state that has been designated a state sponsor of terrorism and arising from acts of international terrorism.[4] In general, a claim is determined eligible for payment from the Fund if the Special Master determines that the judgment holder (referred to as a ''claimant'') is a United States person, that the claim at issue meets the definition of claim above, and that the claim was submitted timely.[5] The first round of payments was distributed in early 2017 and the second round in early 2019.[6] As of March 2021, the Fund had allocated $1.075 billion for third-round payments and was in the process of distributing payments on a rolling basis.[7]

As enacted, the Terrorism Act precluded claimants (generally 9/11 victims, spouses, and dependents) who had received an award from the

[1] See 34 U.S.C. 20144(j)(10)–(14) (defining the terms ''9/11 victim,'' ''9/11 spouse,'' and ''9/11 dependent,'' among others); see also 28 CFR 104.2, 104.3.

[2] Public Law 116–260, div. FF, tit. XVII, 134 Stat. 1182, 3293–3294, amending Public Law 114–113, div. O, tit. IV, 404, 129 Stat. 2242, 3007–3017 (classified as amended at 34 U.S.C. 20144(d)(4)(C)).

[3] See 34 U.S.C. 20144(b)(1).

[4] 34 U.S.C. 20144(c)(2).

[5] 34 U.S.C. 20144(c)(1).

[6] The Fund allocated $1.1 billion for initial-round payments and $1.095 billion for second-round payments. See U.S. Victims of State Sponsored Terrorism Fund, ''Special Master Report Regarding the Third Distribution,'' at 2 (June 2020).

[7] See id.; U.S. Victims of State Sponsored Terrorism Fund, *http://www.usvsst.com/* (last accessed Mar. 15, 2021).

September 11th Victim Compensation Fund (VCF) from receiving payments from the United States Victims of State Sponsored Terrorism Fund, even if their claims were determined eligible by the Special Master.[8] Because 9/11 family members (*i.e.,* immediate family members of 9/11 victims who are not spouses or dependents, such as non-dependent parents and siblings) generally did not receive awards from the VCF, they were not precluded from receiving payments from the Fund if their claims were determined eligible. In 2019, the United States Victims of State Sponsored Terrorism Fund Clarification Act (Clarification Act) removed the language precluding 9/11-related claimants (*i.e.,* 9/11 victims, spouses, and dependents) who received awards from the VCF from receiving payments from the Fund.[9]

Section 1705 of the Sudan Claims Resolution Act contains a provision for GAO to conduct an audit and publish a notice estimating potential lump sum catch-up payments to 9/11 victims, 9/11 spouses, and 9/11 dependents who have eligible claims from the Fund. Specifically, we are publishing for comment our methodology for estimating potential lump-sum catch up payments in ''amounts that, after receiving the lump sum catch-up payments, would result in the percentage of the claims of 9/11 victims, 9/11 spouses, and 9/11 dependents received from the Fund being equal to the percentage of the claims of 9/11 family members received from the Fund, as of the date of enactment.'' [10] For the purpose of this analysis, ''9/11 family members'' are eligible claimants who received payments from the Fund in the first and second rounds of payments in 2017 and 2019, respectively; and ''9/11 victims, 9/11 spouses, and 9/11 dependents'' are claimants who had eligible claims (based on eligible final judgments) prior to the Clarification Act, but were precluded from receiving payments from the Fund because they had received awards from the VCF.[11]

To estimate the amount(s) called for in the mandate, GAO plans to utilize data from the Fund on the following amounts: (1) Payments received by 9/11 family members in rounds one and two; (2) net eligible claims [12] of 9/11 family members who received payments in rounds one and two; and (3) net eligible claims [13] of 9/11 victims, spouses, and dependents. Using these amounts, we plan to calculate the percentage of 9/11 family members' net eligible claims that were paid from the Fund in rounds one and two. We will then apply this percentage to net eligible claims of 9/11 victims, spouses, and dependents to generate the lump sum catch-up payment amount for 9/11 victims, spouses, and dependents, in an equal percentage.

After consideration of comments from this notice, we will issue a second **Federal Register** notice, utilizing data from the Fund to report estimated lump sum catch-up payments based on this methodology with any changes we determine appropriate. We will again seek public comment on the second **Federal Register** notice.

Authority: Pub. L. 116–260, div. FF, tit. XVII, 1705, 134 Stat. 1182, 3293–3294 (34 U.S.C. 20144(d)(4)(C)).

Charles Michael Johnson, Jr.,

Managing Director, Homeland Security and Justice, U.S. Government Accountability Office.

[FR Doc. 2021–06084 Filed 3–25–21; 8:45 am]

BILLING CODE 1610–02–P

[8] See Public Law 114–113, div. O, tit. IV, 404, 129 Stat. 2242, 3010–3011.

[9] Public Law 116–69, div. B, tit. VII, 1701, 133 Stat. 1134, 1140–1141.

[10] 34 U.S.C. 20144(d)(4)(C)(i). Further, section 1705 provides for GAO to conduct this audit in accordance with 34 U.S.C. 20144(d)(3)(A), which generally places limits on the amount of eligible claims (referred to as ''statutory caps''). For example, for individuals, the cap is generally $20,000,000 and for claims of family members when aggregated, the cap is generally $35,000,000. As such, we plan to utilize data from the Fund on the claim amounts after the application of statutory caps.

[11] In the context of the overall statutory scheme of the Fund, the population for which we are estimating ''catch-up payments'' are 9/11 victims, spouses, and dependents who applied for payments in the first, second, or third round of payments from the Fund; whose final judgment date was prior to the close of the application period for the second round of payments (September 14, 2018); and who did not receive payments from the Fund in rounds one or two. See 34 U.S.C. 20144(c), (d)(4)(C); U.S. Victims of State Sponsored Terrorism Fund, ''Special Master Report Regarding the Third Distribution,'' at 2 (June 2020). According to the Fund's June 2020 congressional report, the applications of eligible claimants who applied in rounds one or two are carried forward into subsequent payment rounds.

[12] For the purposes of our analysis, ''net eligible claims'' refers to the monetary amount of all eligible claims after the application of statutory caps by the Fund, if applicable. 34 U.S.C. 20144(d)(3)(A). In accordance with GAO standards, we will assess the reliability and completeness of the data from the Fund to ensure that it is appropriate for these purposes.

[13] As discussed in footnote 11 above, a 9/11 victim, dependent, or spouse's net eligible claim would be included if they applied for payments in the first, second, or third round of payments from the Fund; if the date of their final judgment was prior to the close of the application period for the second round of payments (September 14, 2018); and if they did not receive a payment from the Fund in rounds one or two.

DEPARTMENT OF HEALTH AND HUMAN SERVICES

Agency for Toxic Substances and Disease Registry

[60Day–21–0047; Docket No. ATSDR–2021–0003]

Proposed Data Collection Submitted for Public Comment and Recommendations

AGENCY: Agency for Toxic Substances and Disease Registry (ATSDR), Department of Health and Human Services (HHS).

ACTION: Notice with comment period.

SUMMARY: The Agency for Toxic Substances and Disease Registry (ATSDR), as part of its continuing effort to reduce public burden and maximize the utility of government information, invites the general public and other Federal agencies the opportunity to comment on a proposed and/or continuing information collection, as required by the Paperwork Reduction Act of 1995. This notice invites comment on a proposed information collection project titled ''Generic Clearance for the Collection of Qualitative Feedback on Agency Service Delivery.'' The information collection activity provides a means to garner qualitative customer and stakeholder feedback in an efficient, timely manner, in accordance with the Federal government's commitment to improving service delivery.

DATES: ATSDR must receive written comments on or before May 25, 2021.

ADDRESSES: You may submit comments, identified by Docket No. ATSDR–2021–0003 by any of the following methods:

- *Federal eRulemaking Portal: Regulations.gov.* Follow the instructions for submitting comments.
- *Mail:* Jeffrey M. Zirger, Information Collection Review Office, Centers for Disease Control and Prevention, 1600 Clifton Road NE, MS–D74, Atlanta, Georgia 30329.

Instructions: All submissions received must include the agency name and Docket Number. ATSDR will post, without change, all relevant comments to *Regulations.gov.*

Please note: Submit all comments through the Federal eRulemaking portal (regulations.gov) or by U.S. mail to the address listed above.

FOR FURTHER INFORMATION CONTACT: To request more information on the proposed project or to obtain a copy of the information collection plan and instruments, contact Jeffrey M. Zirger, Information Collection Review Office,

Centers for Disease Control and Prevention, 1600 Clifton Road NE, MS–D74, Atlanta, Georgia 30329; phone: 404–639–7118; Email: *omb@cdc.gov.*

SUPPLEMENTARY INFORMATION: Under the Paperwork Reduction Act of 1995 (PRA) (44 U.S.C. 3501–3520), Federal agencies must obtain approval from the Office of Management and Budget (OMB) for each collection of information they conduct or sponsor. In addition, the PRA also requires Federal agencies to provide a 60-day notice in the **Federal Register** concerning each proposed collection of information, including each new proposed collection, each proposed extension of existing collection of information, and each reinstatement of previously approved information collection before submitting the collection to the OMB for approval. To comply with this requirement, we are publishing this notice of a proposed data collection as described below.

The OMB is particularly interested in comments that will help:

1. Evaluate whether the proposed collection of information is necessary for the proper performance of the functions of the agency, including whether the information will have practical utility;
2. Evaluate the accuracy of the agency's estimate of the burden of the proposed collection of information, including the validity of the methodology and assumptions used;
3. Enhance the quality, utility, and clarity of the information to be collected; and
4. Minimize the burden of the collection of information on those who are to respond, including through the use of appropriate automated, electronic, mechanical, or other technological collection techniques or other forms of information technology, *e.g.,* permitting electronic submissions of responses.
5. Assess information collection costs.

Proposed Project

Generic Clearance for the Collection of Qualitative Feedback on Agency Service Delivery (OMB Control No. 0923–0047, Exp. 01/31/2022)—Extension—Agency for Toxic Substances and Disease Registry (ATSDR).

Background and Brief Description

The information collection activity provides a means to garner qualitative customer and stakeholder feedback in an efficient, timely manner, in accordance with the Federal government's commitment to improving service delivery. By qualitative feedback we mean information that provides useful insights on perceptions and opinions, but are not statistical surveys that yield quantitative results that can be generalized to the population of study.

This feedback will provide insights into customer or stakeholder perceptions, experiences and expectations, provide an early warning of issues with service, or focus attention on areas where communication, training or changes in operations might improve delivery of products or services. These collections will allow for ongoing, collaborative and actionable communications between the Agency and its customers and stakeholders. It will also allow feedback to contribute directly to the improvement of program management.

The solicitation of feedback will target areas such as: timeliness, appropriateness, accuracy of information, courtesy, efficiency of service delivery, and resolution of issues with service delivery. Responses will be assessed to plan and inform efforts to improve or maintain the quality of service offered to the public. If this information is not collected, vital feedback from customers and stakeholders on the Agency's services will be unavailable.

ATSDR will only submit a collection for approval under this generic clearance if it meets the following conditions:

- The collections are voluntary;
- The collections are low-burden for respondents (based on considerations of total burden hours, total number of respondents, or burden-hours per respondent) and are low-cost for both the respondents and the Federal Government;
- The collections are noncontroversial and do not raise issues of concern to other Federal agencies;
- Any collection is targeted to the solicitation of opinions from respondents who have experience with the program or may have experience with the program in the near future;
- Personally identifiable information (PII) is collected only to the extent necessary and is not retained;
- Information gathered is intended to be used only internally for general service improvement and program management purposes and is not intended for release outside of the agency (if released, the agency must indicate the qualitative nature of the information);
- Information gathered will not be used for the purpose of substantially informing influential policy decisions; and
- Information gathered will yield qualitative information; the collections will not be designed or expected to yield statistically reliable results or used as though the results are generalizable to the population of study.

Feedback collected under this generic clearance provides useful information, but it does not yield data that can be generalized to the overall population. This type of generic clearance for qualitative information will not be used for quantitative information collections that are designed to yield reliably actionable results, such as monitoring trends over time or documenting program performance. Such data uses require more rigorous designs that address: The target population to which generalizations will be made, the sampling frame, the sample design (including stratification and clustering), the precision requirements or power calculations that justify the proposed sample size, the expected response rate, methods for assessing potential nonresponse bias, the protocols for data collection, and any testing procedures that were or will be undertaken prior to fielding the study. Depending on the degree of influence the results are likely to have, such collections may still be eligible for submission for other generic mechanisms that are designed to yield quantitative results.

As a general matter, information collections will not result in any new system of records containing privacy information and will not ask questions of a sensitive nature, such as sexual behavior and attitudes, religious beliefs, and other matters that are commonly considered private.

This is an extension of the previously approved collection of 7,075 annualized burden hours. The respondents are Individuals and Households; Businesses and Organizations; and State, Local, or Tribal Government. There is no cost to respondents other than their time.

ESTIMATED ANNUALIZED BURDEN HOURS

Type of respondent	Type of collection	Number of respondents	Number of responses per respondent	Hours per response	Total burden (in hours)
Individuals and Households; Businesses and Organizations; and State, Local, or Tribal Government.	Small discussion groups	300	1	90/60	450
	Request for customer comment cards/complaint forms/post-conference or training surveys.	1,500	1	15/60	375
	Focus groups of customers, potential customers, delivery partners, or other stakeholders.	2,000	1	2	4,000
	Qualitative customer satisfaction surveys or interviews.	3,000	1	30/60	1,500
	Usability testing/in-person observation testing.	1,500	1	30/60	750
Total					7,075

Jeffrey M. Zirger,

Lead, Information Collection Review Office, Office of Scientific Integrity, Office of Science, Centers for Disease Control and Prevention.

[FR Doc. 2021–06290 Filed 3–25–21; 8:45 am]

BILLING CODE 4163–70–P

DEPARTMENT OF HEALTH AND HUMAN SERVICES

Centers for Disease Control and Prevention

[30Day–21–21AT]

Agency Forms Undergoing Paperwork Reduction Act Review

In accordance with the Paperwork Reduction Act of 1995, the Centers for Disease Control and Prevention (CDC) has submitted the information collection request titled Evaluation of Venous Thromboembolism Prevention Practices in U.S. Hospitals to the Office of Management and Budget (OMB) for review and approval. CDC previously published a ''Proposed Data Collection Submitted for Public Comment and Recommendations'' notice on November 19, 2020 to obtain comments from the public and affected agencies. CDC did not receive comments related to the previous notice. This notice serves to allow an additional 30 days for public and affected agency comments.

CDC will accept all comments for this proposed information collection project. The Office of Management and Budget is particularly interested in comments that:

(a) Evaluate whether the proposed collection of information is necessary for the proper performance of the functions of the agency, including whether the information will have practical utility;

(b) Evaluate the accuracy of the agencies estimate of the burden of the proposed collection of information, including the validity of the methodology and assumptions used;

(c) Enhance the quality, utility, and clarity of the information to be collected;

(d) Minimize the burden of the collection of information on those who are to respond, including, through the use of appropriate automated, electronic, mechanical, or other technological collection techniques or other forms of information technology, *e.g.,* permitting electronic submission of responses; and

(e) Assess information collection costs.

To request additional information on the proposed project or to obtain a copy of the information collection plan and instruments, call (404) 639–7570. Comments and recommendations for the proposed information collection should be sent within 30 days of publication of this notice to *www.reginfo.gov/public/do/PRAMain* Find this particular information collection by selecting ''Currently under 30-day Review—Open for Public Comments'' or by using the search function. Direct written comments and/or suggestions regarding the items contained in this notice to the Attention: CDC Desk Officer, Office of Management and Budget, 725 17th Street NW, Washington, DC 20503 or by fax to (202) 395–5806. Provide written comments within 30 days of notice publication.

Proposed Project

Evaluation of Venous Thromboembolism Prevention Practices in U.S. Hospitals—New—National Center on Birth Defects and Developmental Disabilities (NCBDDD), Centers for Disease Control and Prevention (CDC).

Background and Brief Description

The National Center on Birth Defects and Disabilities (NCBDDD) is submitting a New Information Collection Request for one-year approval. Venous thromboembolism (VTE) is an important and growing public health problem. Over half of VTE events are associated with recent hospitalization and most occur after discharge. Hospital-associated VTE is often preventable but VTE prevention strategies are not applied uniformly or systematically across U.S. hospitals. The framework for VTE prevention in hospitalized patients includes a hospital VTE prevention policy, an interdisciplinary VTE team, a VTE prevention protocol, monitoring of processes and outcomes, and VTE prevention education for providers and patients. A VTE prevention protocol includes VTE risk assessment, bleeding risk assessment, and clinical decision support for appropriate VTE prophylaxis. Increase in VTE risk assessment rates have been associated with improvements in VTE prophylaxis.

An implementation gap exists between evidence-based guidelines for VTE prophylaxis in hospitalized adult patients and implementation of those guidelines in real-world hospital settings. However, data on VTE prevention practices in U.S. hospitals is lacking. To address this gap, CDC, in collaboration with The Joint Commission, developed a survey on hospital VTE prevention practices. The survey will be implemented by The Joint Commission as an electronic one-time data collection in a nationally representative sample of U.S. adult general medical and surgical hospitals. The target respondent will be the

hospital Director of Patient Safety and Quality or similar position. The survey will be voluntary. No individual-level data will be collected. CDC will not receive any individual or hospital identifiable information.

The information collected will improve understanding of hospital VTE prevention practices to guide efforts and inform interventions to reduce the burden of hospital-associated VTE. Information on the capacity of hospitals to collect data on VTE risk assessment will be helpful in determining the feasibility of VTE risk assessment as a VTE prevention performance measure. The data collected can also serve as a baseline for evaluation of future hospital-associated VTE prevention initiatives. The estimated annual burden is 384 hours, based on a pilot of the electronic survey at 9 hospitals. There is no cost to respondents other than their time.

ESTIMATED ANNUALIZED BURDEN HOURS

Type of respondents	Form name	Number of respondents	Number of responses per respondent	Average burden per response (in hours)
The Director of Patient Safety and Quality, the Chairperson of the Patient Safety Committee, other quality improvement professional.	Evaluation of Venous Thrombo-embolism Prevention Practices in U.S. Hospitals Questionnaire.	384	1	1

Jeffrey M. Zirger,

Lead, Information Collection Review Office, Office of Scientific Integrity, Office of Science, Centers for Disease Control and Prevention.

[FR Doc. 2021–06288 Filed 3–25–21; 8:45 am]

BILLING CODE 4163–18–P

DEPARTMENT OF HEALTH AND HUMAN SERVICES

Centers for Disease Control and Prevention

[30Day–21–0740]

Agency Forms Undergoing Paperwork Reduction Act Review

In accordance with the Paperwork Reduction Act of 1995, the Centers for Disease Control and Prevention (CDC) has submitted the information collection request titled Medical Monitoring Project (MMP) to the Office of Management and Budget (OMB) for review and approval. CDC previously published a ''Proposed Data Collection Submitted for Public Comment and Recommendations'' notice on September 8, 2020 to obtain comments from the public and affected agencies. CDC received no comments related to the previous notice. This notice serves to allow an additional 30 days for public and affected agency comments.

CDC will accept all comments for this proposed information collection project. The Office of Management and Budget is particularly interested in comments that:

(a) Evaluate whether the proposed collection of information is necessary for the proper performance of the functions of the agency, including whether the information will have practical utility;

(b) Evaluate the accuracy of the agencies estimate of the burden of the proposed collection of information, including the validity of the methodology and assumptions used;

(c) Enhance the quality, utility, and clarity of the information to be collected;

(d) Minimize the burden of the collection of information on those who are to respond, including, through the use of appropriate automated, electronic, mechanical, or other technological collection techniques or other forms of information technology, *e.g.,* permitting electronic submission of responses; and

(e) Assess information collection costs.

To request additional information on the proposed project or to obtain a copy of the information collection plan and instruments, call (404) 639–7570. Comments and recommendations for the proposed information collection should be sent within 30 days of publication of this notice to *www.reginfo.gov/public/do/PRAMain* Find this particular information collection by selecting ''Currently under 30-day Review—Open for Public Comments'' or by using the search function. Direct written comments and/or suggestions regarding the items contained in this notice to the Attention: CDC Desk Officer, Office of Management and Budget, 725 17th Street NW, Washington, DC 20503 or by fax to (202) 395–5806. Provide written comments within 30 days of notice publication.

Proposed Project

Medical Monitoring Project (MMP)—(OMB Control No. 0920–0740, Exp. 6/30/2021)—Revision—National Center for HIV/AIDS, Viral Hepatitis, STD, and TB Prevention (NCHHSTP), Centers for Disease Control and Prevention (CDC).

Background and Brief Description

The Centers for Disease Control and Prevention (CDC), Division of HIV/AIDS Prevention (DHAP) requests a Revision of the currently approved Information Collection Request: ''Medical Monitoring Project'' expiring June 30, 2021. This data collection addresses the need for national estimates of access to, and utilization of, HIV-related medical care and services, the quality of HIV-related ambulatory care, and HIV-related behaviors and clinical outcomes.

For the proposed project, the same data collection methods will be used as for the currently approved project. Data would be collected from a probability sample of HIV-diagnosed adults in the U.S. who consent to an interview and abstraction of their medical records. As for the currently approved project, de-identified information would also be extracted from HIV case surveillance records for a dataset, referred to as the minimum dataset, which is used to assess non-response bias, for quality control, to improve the ability of MMP to monitor ongoing care and treatment of HIV-infected persons, and to make inferences from the MMP sample to HIV-diagnosed persons nationally. No other Federal agency collects such nationally representative population-based information from HIV-diagnosed adults. The data are expected to have significant implications for policy, program development, and resource allocation at the state/local and national levels.

The changes proposed in this request update the data collection system to meet prevailing information needs and enhance the value of MMP data, while remaining within the scope of the currently approved project purpose. The result is a 10% reduction in burden, or a reduction of 647 total burden hours annually. The reduction in burden was a result of revisions to the interview questionnaire that were made to improve coherence, boost the efficiency

of the data collection, and increase the relevance and value of the information, which decreased the time of interview from 45 minutes to 40 minutes.

Changes were made that did not affect the burden, listed below:

• Non-substantive changes have been made to the respondent consent form to decrease the reading comprehension level and make the form more visual.

• Nine data elements were removed from and three data elements were added to the Minimum Dataset. Because these data elements are extracted from the HIV surveillance system from which they are sampled, these changes do not affect the burden of the project.

• Seven data elements were added to the medical record abstraction data elements to collect information on SARS–CoV–2 (COVID–19) testing. Because the medical records are abstracted by MMP staff, these changes do not affect the burden of the project.

This proposed data collection would supplement the National HIV Surveillance System (NHSS, OMB Control No. 0920–0573, Exp. 11/30/2022) in 23 selected state and local health departments, which collect information on persons diagnosed with, living with, and dying from HIV infection and AIDS. Through their participation, respondents will help to improve programs to prevent HIV infection as well as services for those who already have HIV. The participation of respondents is voluntary. There is no cost to the respondents other than their time. Total estimated annual burden requested is 5,707 hours.

ESTIMATED ANNUALIZED BURDEN HOURS

Respondent type	Form name	Number of respondents	Number of responses per respondent	Average hours per response
Sampled, Eligible HIV-Infected Persons	Interview Questionnaire	7,760	1	40/60
Facility office staff looking up contact information.	Look up contact information	1,940	1	2/60
Facility office staff approaching sampled persons for enrollment.	Approach persons for enrollment	970	1	5/60
Facility office staff pulling medical records	Pull medical records	7,760	1	3/60

Jeffrey M. Zirger,

Lead, Information Collection Review Office, Office of Scientific Integrity, Office of Science, Centers for Disease Control and Prevention.

[FR Doc. 2021–06289 Filed 3–25–21; 8:45 am]

BILLING CODE 4163–18–P

DEPARTMENT OF HEALTH AND HUMAN SERVICES

Centers for Disease Control and Prevention

[60Day–2021–0706; Docket No. CDC–2021–0030]

Proposed Data Collection Submitted for Public Comment and Recommendations

AGENCY: Centers for Disease Control and Prevention (CDC), Department of Health and Human Services (HHS).

ACTION: Notice with comment period.

SUMMARY: The Centers for Disease Control and Prevention (CDC), as part of its continuing effort to reduce public burden and maximize the utility of government information, invites the general public and other Federal agencies the opportunity to comment on a proposed and/or continuing information collection, as required by the Paperwork Reduction Act of 1995. This notice invites comment on a proposed information collection project titled National Program of Cancer Registries Program Evaluation Instrument (NPCR–PEI). The NPCR Program Evaluation Instrument (PEI) is a web-based survey instrument designed to evaluate NPCR-funded registries' operational attributes and their progress towards meeting program standards. The PEI monitors the integration of surveillance, registry operations and health information systems, the utilization of established data standards, and the electronic exchange of health data. The PEI serves to inform CDC and NPCR Program Consultants where technical assistance is most needed to continue to improve and enhance the NPCR.

DATES: CDC must receive written comments on or before May 25, 2021.

ADDRESSES: You may submit comments, identified by Docket No. CDC–2021–0030 by any of the following methods:

• *Federal eRulemaking Portal: Regulations.gov*. Follow the instructions for submitting comments.

• *Mail:* Jeffrey M. Zirger, Information Collection Review Office, Centers for Disease Control and Prevention, 1600 Clifton Road NE, MS–D74, Atlanta, Georgia 30329.

Instructions: All submissions received must include the agency name and Docket Number. CDC will post, without change, all relevant comments to *Regulations.gov*.

Please note: Submit all comments through the Federal eRulemaking portal (regulations.gov) or by U.S. mail to the address listed above.

FOR FURTHER INFORMATION CONTACT: To request more information on the proposed project or to obtain a copy of the information collection plan and instruments, contact Jeffrey M. Zirger, Information Collection Review Office, Centers for Disease Control and Prevention, 1600 Clifton Road NE, MS–D74, Atlanta, Georgia 30329; phone: 404–639–7118; Email: *omb@cdc.gov.*

SUPPLEMENTARY INFORMATION: Under the Paperwork Reduction Act of 1995 (PRA) (44 U.S.C. 3501–3520), Federal agencies must obtain approval from the Office of Management and Budget (OMB) for each collection of information they conduct or sponsor. In addition, the PRA also requires Federal agencies to provide a 60-day notice in the **Federal Register** concerning each proposed collection of information, including each new proposed collection, each proposed extension of existing collection of information, and each reinstatement of previously approved information collection before submitting the collection to the OMB for approval. To comply with this requirement, we are publishing this notice of a proposed data collection as described below.

The OMB is particularly interested in comments that will help:

1. Evaluate whether the proposed collection of information is necessary for the proper performance of the functions of the agency, including whether the information will have practical utility;

2. Evaluate the accuracy of the agency's estimate of the burden of the proposed collection of information, including the validity of the methodology and assumptions used;

3. Enhance the quality, utility, and clarity of the information to be collected;

4. Minimize the burden of the collection of information on those who are to respond, including through the use of appropriate automated, electronic, mechanical, or other technological collection techniques or other forms of information technology, *e.g.,* permitting electronic submissions of responses; and

5. Assess information collection costs.

Proposed Project

National Program of Cancer Registries Program Evaluation Instrument (NPCR–PEI) (OMB Control No. 0920–0706, Exp. 02/28/2021)—Reinstatement—National Center for Chronic Disease Prevention and Health Promotion (NCCDPHP), Centers for Disease Control and Prevention (CDC).

Background and Brief Description

CDC is responsible for administering and monitoring the National Program of Cancer Registries (NPCR). The NPCR provides technical assistance and funding, and sets program standards to assure that complete local, state, regional, and national cancer incidence data are available for national and state cancer control and prevention activities and health planning activities. The Program Evaluation Instrument (PEI) has been used for 28 years to monitor the performance of NPCR grantees in meeting the required Program Standards.

CDC currently supports 50 population-based cancer registries (CCR) in 46 states, two territories, the District of Columbia, and the Pacific Islands. The National Cancer Institute supports the operations of CCRs in the four remaining states. The Program Evaluation Instrument (NCPR–PEI) includes questions about the following categories of registry operations: (1) Staffing, (2) legislation, (3) administration, (4) reporting completeness, (5) data exchange, (6) data content and format, (7) data quality assurance, (8) data use, (9) collaborative relationships, (10) advanced activities, and (11) survey feedback.

Examples of information that can be obtained from various questions include, but are not limited to: (1) Number of filled staff full-time positions by position responsibility; (2) revision to cancer reporting legislation; (3) various data quality control activities; (4) data collection activities as they relate to achieving NPCR program standards for data completeness; (5) whether registry data is being used for comprehensive cancer control programs, needs assessment/program planning, clinical studies, or incidence and mortality estimates.

The NPCR–PEI is needed to receive, process, evaluate, aggregate, and disseminate NPCR program information. The information is used by CDC and the NPCR-funded registries to monitor progress toward meeting established program standards, goals, and objectives; to evaluate various attributes of the registries funded by NPCR; and to respond to data inquiries made by CDC and other agencies of the federal government. CDC requests OMB approval for a period of three years to collect information in the winter of 2022 and 2024.

The current burden estimate is based on the current 50 NPCR awardees. The new project period begins July 1, 2022. If the number of awardees changes, then a change request will be submitted to accurately reflect the burden hours. There are no costs to the respondents other than their time. CDC requests approval for an estimated 66 annualized burden hours. This is summarized in the table below.

ESTIMATED ANNUALIZED BURDEN HOURS

Type of respondents	Form name	Number of respondents	Number of responses per respondent	Average burden per response (in hours)	Total burden (in hours)
NPCR Awardees	PEI (Online)	30	1	2	60
NPCR Awardees	PEI (Paper)	3	1	2	6
Total		33	1	2	66

Jeffrey M. Zirger,

Lead, Information Collection Review Office, Office of Scientific Integrity, Office of Science, Centers for Disease Control and Prevention.

[FR Doc. 2021–06291 Filed 3–25–21; 8:45 am]

BILLING CODE 4163–18–P

DEPARTMENT OF HEALTH AND HUMAN SERVICES

Centers for Medicare & Medicaid Services

Privacy Act of 1974; Matching Program

AGENCY: Centers for Medicare & Medicaid Services (CMS), Department of Health and Human Services (HHS).

ACTION: Notice of new matching program.

SUMMARY: In accordance with the Privacy Act of 1974, as amended, the Department of Health and Human Services (HHS), Centers for Medicare & Medicaid Services (CMS) is providing notice of a new matching program between CMS and the Department of Defense, Defense Manpower Data Center for ''The Verification of Eligibility for Minimum Essential Coverage Under the Patient Protection and Affordable Care Act through a Department of Defense Health Benefits Plan.''

DATES: The deadline for comments on this notice is April 26, 2021. The re-established matching program will commence not sooner than 30 days after publication of this notice, provided no comments are received that warrant a change to this notice. The matching program will be conducted for an initial term of 18 months (from approximately May 30, 2021 to November 29, 2022) and within 3 months of expiration may be renewed for one additional year if the parties make no change to the matching program and certify that the program has been conducted in compliance with the matching agreement.

ADDRESSES: Interested parties may submit comments as follows:

1. *Electronically.* You may send your comments electronically to *http://www.regulations.gov.* Follow the instructions for ''Comment or Submission'' or ''More Search Options'' to find the information collection document(s) that are accepting comments.

2. *By Regular Mail.* You may mail written comments to the following address: Centers for Medicare & Medicaid Services, Division of Security, Privacy Policy & Governance, Information Security & Privacy Group, Office of Information Technology,

Location: N1–14–56, 7500 Security Blvd., Baltimore, MD 21244–1850.

FOR FURTHER INFORMATION CONTACT: If you have questions about the matching program, you may contact Anne Pesto, Senior Advisor, Marketplace Eligibility and Enrollment Group, Center for Consumer Information and Insurance Oversight, Centers for Medicare & Medicaid Services, at 410–786–3492, by email at *anne.pesto@cms.hhs.gov,* or by mail at 7500 Security Blvd., Baltimore, MD 21244.

SUPPLEMENTARY INFORMATION: The Privacy Act of 1974, as amended (5 U.S.C. 552a) provides certain protections for individuals applying for and receiving federal benefits. The law governs the use of computer matching by federal agencies when records in a system of records (meaning, federal agency records about individuals retrieved by name or other personal identifier) are matched with records of other federal or non-federal agencies. The Privacy Act requires agencies involved in a matching program to:

1. Enter into a written agreement, which must be prepared in accordance with the Privacy Act, approved by the Data Integrity Board of each source and recipient federal agency, provided to Congress and the Office of Management and Budget (OMB), and made available to the public, as required by 5 U.S.C. 552a(o), (u)(3)(A), and (u)(4).
2. Notify the individuals whose information will be used in the matching program that the information they provide is subject to verification through matching, as required by 5 U.S.C. 552a(o)(1)(D).
3. Verify match findings before suspending, terminating, reducing, or making a final denial of an individual's benefits or payments or taking other adverse action against the individual, as required by 5 U.S.C. 552a(p).
4. Report the matching program to Congress and the OMB, in advance and annually, as required by 5 U.S.C. 552a(o)(2)(A)(i), (r), and (u)(3)(D).
5. Publish advance notice of the matching program in the **Federal Register** as required by 5 U.S.C. 552a(e)(12).

This matching program meets these requirements.

Barbara Demopulos,

Privacy Advisor, Division of Security, Privacy Policy and Governance, Office of Information Technology, Centers for Medicare & Medicaid Services.

Participating Agencies

The Department of Health and Human Services (HHS), Centers for Medicare & Medicaid Services (CMS) is the recipient agency, and the Department of Defense (DoD), Defense Manpower Data Center (DMDC) is the source agency.

Authority for Conducting the Matching Program

The statutory authority for the matching program is 42 U.S.C. 18081 and 42 U.S.C. 18083.

Purpose(s)

The purpose of the matching program is to provide CMS with DoD data verifying individuals' eligibility for coverage under a DoD health benefits plan (*i.e.,* TRICARE), when requested by CMS and state-based administering entities (AE) for the purpose of determining the individuals' eligibility for insurance affordability programs under the Patient Protection and Affordable Care Act (PPACA). CMS and the requesting AE will use the DoD data to determine whether an enrollee in private health coverage under a qualified health plan through a federally-facilitated or state-based health insurance exchange is eligible for coverage under TRICARE, and the dates the individual was eligible for TRICARE coverage. DoD health benefit plans provide minimum essential coverage (MEC), and eligibility for such plans precludes eligibility for financial assistance in paying for private coverage. CMS and AE will use the DoD data to authenticate identity, determine eligibility for financial assistance (including an advance tax credit and cost-sharing reduction, which are types of insurance affordability programs), and determine the amount of any financial assistance.

Categories of Individuals

The categories of individuals whose information is involved in the matching program are active duty service members and their family members and retirees and their family members whose TRICARE eligibility records at DoD match data provided to DoD by CMS (submitted by AEs) about individual consumers who are applying for or are enrolled in private health insurance coverage under a qualified health plan through a federally-facilitated or state-based health insurance exchange.

Categories of Records

The categories of records used in the matching program are identity records and minimum essential coverage (MEC) period records. To request information from DoD, CMS will submit a request to DoD that may contain, but is not limited to, the following specified data elements in a fixed record format: Last name, middle name, first name, date of birth, gender, Social Security Number (SSN), requested Qualified Health Plan (QHP) coverage effective date and end date, and transaction ID. When DoD is able to match the SSN and name provided by CMS and information is available, DoD will provide CMS with the following about each individual, as relevant: SSN, response code indicating enrollment in MEC under a TRICARE plan, and, as applicable, end date of enrollment in MEC under a TRICARE plan.

A. System of Records Maintained by CMS

CMS Health Insurance Exchanges System (HIX), CMS System No. 09–70–0560, last published in full at 78 FR 63211 (Oct. 23, 2013), as amended at 83 FR 6591 (Feb. 14, 2018). Routine use 3 authorizes CMS' disclosures of identifying information about applicants to DoD for use in this matching program.

B. System of Records Maintained by DoD

The DoD system of records and routine use that support this matching program are Routine Use h in DMDC 02 DoD, Defense Enrollment Eligibility Reporting Systems (DEERS), published at 84 FR 55293 (Oct. 16, 2019) and corrected at 84 FR 65975 (Dec. 2, 2019).

[FR Doc. 2021–06313 Filed 3–25–21; 8:45 am]

BILLING CODE 4120–03–P

DEPARTMENT OF HEALTH AND HUMAN SERVICES

Centers for Medicare & Medicaid Services

[Document Identifier: CMS–10657]

Agency Information Collection Activities: Proposed Collection; Comment Request

AGENCY: Centers for Medicare & Medicaid Services, Health and Human Services (HHS).

ACTION: Notice.

SUMMARY: The Centers for Medicare & Medicaid Services (CMS) is announcing an opportunity for the public to comment on CMS' intention to collect information from the public. Under the Paperwork Reduction Act of 1995 (the PRA), federal agencies are required to publish notice in the **Federal Register** concerning each proposed collection of information (including each proposed extension or reinstatement of an existing collection of information) and to allow 60 days for public comment on the proposed action. Interested persons are

invited to send comments regarding our burden estimates or any other aspect of this collection of information, including the necessity and utility of the proposed information collection for the proper performance of the agency's functions, the accuracy of the estimated burden, ways to enhance the quality, utility, and clarity of the information to be collected, and the use of automated collection techniques or other forms of information technology to minimize the information collection burden.

DATES: Comments must be received by May 25, 2021.

ADDRESSES: When commenting, please reference the document identifier or OMB control number. To be assured consideration, comments and recommendations must be submitted in any one of the following ways:

1. *Electronically.* You may send your comments electronically to *http://www.regulations.gov.* Follow the instructions for ''Comment or Submission'' or ''More Search Options'' to find the information collection document(s) that are accepting comments.

2. *By regular mail.* You may mail written comments to the following address: CMS, Office of Strategic Operations and Regulatory Affairs, Division of Regulations Development, Attention: Document Identifier/OMB Control Number: CMS–P–0015A, Room C4–26–05, 7500 Security Boulevard, Baltimore, Maryland 21244–1850.

To obtain copies of a supporting statement and any related forms for the proposed collection(s) summarized in this notice, you may make your request using one of following:

1. Access CMS' website address at website address at *https://www.cms.gov/Regulations-and-Guidance/Legislation/PaperworkReductionActof1995/PRA-Listing.html.*

FOR FURTHER INFORMATION CONTACT: William N. Parham at (410) 786–4669.

SUPPLEMENTARY INFORMATION:

Contents

This notice sets out a summary of the use and burden associated with the following information collections. More detailed information can be found in each collection's supporting statement and associated materials (see **ADDRESSES**).

CMS–10657—The State Flexibility to Stabilize the Market Grant Program

Under the PRA (44 U.S.C. 3501–3520), federal agencies must obtain approval from the Office of Management and Budget (OMB) for each collection of information they conduct or sponsor. The term ''collection of information'' is defined in 44 U.S.C. 3502(3) and 5 CFR 1320.3(c) and includes agency requests or requirements that members of the public submit reports, keep records, or provide information to a third party. Section 3506(c)(2)(A) of the PRA requires federal agencies to publish a 60-day notice in the **Federal Register** concerning each proposed collection of information, including each proposed extension or reinstatement of an existing collection of information, before submitting the collection to OMB for approval. To comply with this requirement, CMS is publishing this notice.

Information Collection

1. *Type of Information Collection Request:* Revision of a currently approved collection; *Title of Information Collection:* The State Flexibility to Stabilize the Market Cycle Grant Program; *Use:* Section 1003 of the Affordable Care Act (ACA) adds a new section 2794 to the Public Health Service Act (PHS Act) entitled, ''Ensuring That Consumers Get Value for Their Dollars.'' Specifically, section 2794(a) requires the Secretary of the Department of Health and Human Services (the Secretary) (HHS), in conjunction with the States, to establish a process for the annual review of health insurance premiums to protect consumers from unreasonable rate increases. Section 2794(c) directs the Secretary to carry out a program to award grants to States. Section 2794(c)(2)(B) specifies that any appropriated Rate Review Grant funds that are not fully obligated by the end of FY 2014 shall remain available to the Secretary for grants to States for planning and implementing the insurance market reforms and consumer protections under Part A of title XXVII of the (PHS Act. States that are awarded funds under this funding opportunity are required to provide CMS with four quarterly reports and one annual report (except for the last year of the grant) until the end of the grant period detailing the state's progression towards planning and/or implementing the pre-selected market reforms under Part A of Title XXVII of the PHS Act. A final report is due at the end of the grant period. *Form Number:* CMS–10657 (OMB control number: 0938–1366); *Frequency:* Annually and Quarterly; *Affected Public:* State, Local or Tribal Governments; *Number of Respondents:* 40; *Total Annual Responses:* 200; *Total Annual Hours:* 2,720. (For policy questions regarding this collection contact Jim Taing at *James.Taing@cms.hhs.gov.*)

Dated: March 23, 2021.

William N. Parham, III,

Director, Paperwork Reduction Staff, Office of Strategic Operations and Regulatory Affairs.

[FR Doc. 2021–06284 Filed 3–25–21; 8:45 am]

BILLING CODE 4120–01–P

DEPARTMENT OF HEALTH AND HUMAN SERVICES

Centers for Medicare & Medicaid Services

Privacy Act of 1974; Matching Program

AGENCY: Centers for Medicare & Medicaid Services (CMS), Department of Health and Human Services (HHS).

ACTION: Notice of new matching program.

SUMMARY: In accordance with the Privacy Act of 1974, as amended, the Department of Health and Human Services (HHS), Centers for Medicare & Medicaid Services (CMS) is providing notice of a new matching program between CMS and the Peace Corps for ''Verification of Eligibility for Minimum Essential Coverage Under the Patient Protection and Affordable Care Act through a Peace Corps Health Benefits Plan.''

DATES: The deadline for comments on this notice is April 26, 2021. The re-established matching program will commence not sooner than 30 days after publication of this notice, provided no comments are received that warrant a change to this notice. The matching program will be conducted for an initial term of 18 months (from approximately July 1, 2021 to December 31, 2022) and within 3 months of expiration may be renewed for one additional year if the parties make no change to the matching program and certify that the program has been conducted in compliance with the matching agreement.

ADDRESSES: Interested parties may submit comments as follows:

1. *Electronically.* You may send your comments electronically to *http://www.regulations.gov.* Follow the instructions for ''Comment or Submission'' or ''More Search Options'' to find the information collection document(s) that are accepting comments.

2. *By Regular Mail.* You may mail written comments to the following address: Centers for Medicare & Medicaid Services, Division of Security, Privacy Policy & Governance, Information Security & Privacy Group, Office of Information Technology,

Location: N1–14–56, 7500 Security Blvd., Baltimore, MD 21244–1850.

FOR FURTHER INFORMATION CONTACT: If you have questions about the matching program, you may contact Anne Pesto, Senior Advisor, Marketplace Eligibility and Enrollment Group, Center for Consumer Information and Insurance Oversight, Centers for Medicare & Medicaid Services, at 410–786–3492, by email at *anne.pesto@cms.hhs.gov,* or by mail at 7500 Security Blvd., Baltimore, MD 21244.

SUPPLEMENTARY INFORMATION: The Privacy Act of 1974, as amended (5 U.S.C. 552a) provides certain protections for individuals applying for and receiving federal benefits. The law governs the use of computer matching by federal agencies when records in a system of records (meaning, federal agency records about individuals retrieved by name or other personal identifier) are matched with records of other federal or non-federal agencies. The Privacy Act requires agencies involved in a matching program to:

1. Enter into a written agreement, which must be prepared in accordance with the Privacy Act, approved by the Data Integrity Board of each source and recipient federal agency, provided to Congress and the Office of Management and Budget (OMB), and made available to the public, as required by 5 U.S.C. 552a(o), (u)(3)(A), and (u)(4).
2. Notify the individuals whose information will be used in the matching program that the information they provide is subject to verification through matching, as required by 5 U.S.C. 552a(o)(1)(D).
3. Verify match findings before suspending, terminating, reducing, or making a final denial of an individual's benefits or payments or taking other adverse action against the individual, as required by 5 U.S.C. 552a(p).
4. Report the matching program to Congress and the OMB, in advance and annually, as required by 5 U.S.C. 552a(o) (2)(A)(i), (r), and (u)(3)(D).
5. Publish advance notice of the matching program in the **Federal Register** as required by 5 U.S.C. 552a(e)(12).

This matching program meets these requirements.

Barbara Demopulos,

Privacy Advisor, Division of Security, Privacy Policy and Governance, Office of Information Technology, Centers for Medicare & Medicaid Services.

Participating Agencies

The Department of Health and Human Services (HHS), Centers for Medicare & Medicaid Services (CMS) is the recipient agency, and the Peace Corps is the source agency.

Authority for Conducting the Matching Program

The principal statutory authority for the matching program is 42 U.S.C. 18001, *et seq.*

Purpose(s)

The purpose of the matching program is to assist CMS in determining individuals' eligibility for financial assistance in paying for private health insurance coverage. In this matching program, the Peace Corps provides CMS with data identifying all Peace Corps volunteers, which CMS makes available to state administering entities (AEs) through a data services hub, under a separate matching agreement. CMS and AEs use the Peace Corps data to verify whether an individual who is applying for or is enrolled in private health insurance coverage under a qualified health plan through a federally-facilitated or state-based health insurance exchange is eligible for coverage under a Peace Corps health benefit plan, for the purpose of determining the individual's eligibility for financial assistance (including an advance tax credit and cost sharing reduction, which are types of insurance affordability programs) in paying for private health insurance coverage. Peace Corps health benefit plans provide minimum essential coverage, and eligibility for such plans precludes eligibility for financial assistance in paying for private coverage. The data provided by the Peace Corps under this matching program will be used by CMS and AEs to authenticate identity, determine eligibility for financial assistance, and determine the amount of any financial assistance.

Categories of Individuals

The categories of individuals whose information is involved in the matching program are:

- Active and recently separated Peace Corps volunteers, identified in data CMS receives from the Peace Corps; and
- Consumers who apply for or are enrolled in private insurance coverage under a qualified health plan through a federally-facilitated health insurance exchange (and other relevant individuals, such as applicants' and enrollees' household members), whose records are matched against the data CMS receives from the Peace Corps.

Categories of Records

The categories of records which will be provided by the Peace Corps to CMS in this matching program are identity records and minimum essential coverage period records, consisting of these data elements: Last name, middle initial, first name, and date of birth. CMS will not send any data about individual applicants/enrollees to the Peace Corps in order to receive this data about Peace Corps volunteers.

A. System of Records Maintained by CMS

CMS Health Insurance Exchanges System (HIX), CMS System No. 09–70–0560, last published in full at 78 FR 63211 (Oct. 23, 2013), as amended at 83 FR 6591 (Feb. 14, 2018).

B. System of Records Maintained by Peace Corps

The Peace Corps SORN that supports this matching program is PC–17 Peace Corps, Volunteer Applicant and Service Records System, published at 50 FR 1950 (Jan. 14, 1985) and partially amended at 65 FR 63641 (Oct. 24, 2000), 72 FR 44878 (Aug. 9, 2007), 75 FR 53000 (Aug. 30, 2010), and 79 FR 41599 (July 16, 2014). Routine Use (i) published at 50 FR 1950 (Jan. 14, 1985), which permits disclosures ''to verify active or former volunteer service,'' authorizes the Peace Corps' disclosures to CMS.

[FR Doc. 2021–06321 Filed 3–25–21; 8:45 am]

BILLING CODE 4120–03–P

DEPARTMENT OF HEALTH AND HUMAN SERVICES

Food and Drug Administration

[Docket No. FDA–2019–N–0573]

Request for Nominations for Voting Members on a Public Advisory Committee; Blood Products Advisory Committee

AGENCY: Food and Drug Administration, HHS.

ACTION: Notice.

SUMMARY: The Food and Drug Administration (FDA) is requesting nominations for voting members to serve on the Blood Products Advisory Committee (the Committee) in the Center for Biologics Evaluation and Research. Nominations will be accepted for upcoming vacancies effective with this notice. FDA seeks to include the views of women and men, members of all racial and ethnic groups, and individuals with and without disabilities on its advisory committees and, therefore, encourages nominations of appropriately qualified candidates from these groups. This notice is not for

nominations for non-voting industry representatives.

DATES: Nominations received on or before May 25, 2021 will be given first consideration for membership on the Blood Products Advisory Committee. Nominations received after May 25, 2021 will be considered for nomination to the Committee as later vacancies occur.

ADDRESSES: All nominations for membership should be sent electronically by logging into the FDA Advisory Nomination Portal: *https://www.accessdata.fda.gov/scripts/factrsportal/factrs/index.cfm.* Information about becoming a member on an FDA advisory committee can also be obtained by visiting FDA's website at *https://www.fda.gov/advisory-committees.*

FOR FURTHER INFORMATION CONTACT: Christina Vert, Center for Biologics Evaluation and Research, Food and Drug Administration, 10903 New Hampshire Ave., Bldg. 71, Rm. 6268, Silver Spring, MD 20993–0002, 240–402–8054, Fax: 301–595–1309, email: *BPAC@fda.hhs.gov.*

SUPPLEMENTARY INFORMATION: FDA is requesting nominations for voting members to fill upcoming vacancies on the Blood Products Advisory Committee.

I. General Description of the Committee Duties

The Committee reviews and evaluates available data concerning the safety, effectiveness, and appropriate use of blood, products derived from blood and serum or biotechnology that are intended for use in the diagnosis, prevention, or treatment of human diseases, and, as required, any other product for which FDA has regulatory responsibility. The Committee also advises the Commissioner of Food and Drugs (the Commissioner) of its findings regarding screening and testing (to determine eligibility) of donors and labeling of the products, on clinical and laboratory studies involving such products, on the affirmation or revocation of biological products licenses, and on the quality and relevance of FDA's research program that provides the scientific support for regulating these agents. The Committee will function at times as a medical device panel under the Federal Food, Drug, and Cosmetic Act (FD&C Act) Medical Device Amendments of 1976. As such, the Committee recommends classification of devices subject to its review into regulatory categories; recommends the assignment of a priority for the application of regulatory requirements for devices classified in the standards or premarket approval category; advises on formulation of product development protocols and reviews premarket approval applications for those devices to recommend changes in classification as appropriate; recommends exemption of certain devices from the application of portions of the FD&C Act; advises on the necessity to ban a device; and responds to requests from the Agency to review and make recommendations on specific issues or problems concerning the safety and effectiveness of devices.

II. Criteria for Voting Members

The Committee consists of a core of 17 voting members, including the Chair. Members and the Chair are selected by the Commissioner or designee from among authorities knowledgeable in the fields of clinical and administrative medicine, hematology, immunology, blood banking, surgery, internal medicine, biochemistry, engineering, biological and physical sciences, biotechnology, computer technology, statistics, epidemiology, sociology/ethics, and other related professions. Almost all non-Federal members of this committee serve as Special Government Employees. Members will be invited to serve for terms of up to 4 years.

III. Nomination Procedures

Any interested person may nominate one or more qualified persons for membership on the advisory committee. Self-nominations are also accepted. Nominations must include a current, complete résumé or curriculum vitae for each nominee, including current business address, telephone number, and email address if available and a signed copy of the Acknowledgement and Consent form available at the FDA Advisory Nomination Portal (see **ADDRESSES**). Nominations must specify the advisory committee for which the nominee is recommended. Nominations must also acknowledge that the nominee is aware of the nomination unless self-nominated. FDA will ask potential candidates to provide detailed information concerning such matters related to financial holdings, employment, and research grants and/or contracts to permit evaluation of possible sources of conflicts of interest.

This notice is issued under the Federal Advisory Committee Act (5 U.S.C. app. 2) and 21 CFR part 14, relating to advisory committees.

Dated: March 19, 2021.

Lauren K. Roth,

Acting Principal Associate Commissioner for Policy.

[FR Doc. 2021–06259 Filed 3–25–21; 8:45 am]

BILLING CODE 4164–01–P

DEPARTMENT OF HEALTH AND HUMAN SERVICES

Food and Drug Administration

[Docket Nos. FDA–2020–N–1671, FDA–2014–N–0386, FDA–2011–N–0076, FDA–2008–N–0312, FDA–2020–N–1677, FDA–2014–N–1072, and FDA–2019–N–5900]

Agency Information Collection Activities; Announcement of Office of Management and Budget Approvals

AGENCY: Food and Drug Administration, HHS.

ACTION: Notice.

SUMMARY: The Food and Drug Administration (FDA) is publishing a list of information collections that have been approved by the Office of Management and Budget (OMB) under the Paperwork Reduction Act of 1995.

FOR FURTHER INFORMATION CONTACT: Ila S. Mizrachi, Office of Operations, Food and Drug Administration, Three White Flint North, 10A–12M, 11601 Landsdown St., North Bethesda, MD 20852, 301–796–7726, *PRAStaff@fda.hhs.gov.*

SUPPLEMENTARY INFORMATION: The following is a list of FDA information collections recently approved by OMB under section 3507 of the Paperwork Reduction Act of 1995 (44 U.S.C. 3507). The OMB control number and expiration date of OMB approval for each information collection are shown in table 1. Copies of the supporting statements for the information collections are available on the internet at *https://www.reginfo.gov/public/do/PRAMain.* An Agency may not conduct or sponsor, and a person is not required to respond to, a collection of information unless it displays a currently valid OMB control number.

TABLE 1—LIST OF INFORMATION COLLECTIONS APPROVED BY OMB

Title of collection	OMB Control No.	Date approval expires
Good Laboratory Practice (GLP) Regulations for Nonclinical Laboratory Studies	0910–0119	02/29/2024
Orphan Drugs	0910–0167	02/29/2024
Electronic Records: Electronic Signatures	0910–0303	02/29/2024
Extra Label Drug Use in Animals	0910–0325	02/29/2024
Reporting and Recordkeeping Requirements for Human Food and Cosmetics Manufactured from, Processed With, or Otherwise Containing, Material from Cattle	0910–0623	02/29/2024
Application for Participation in Food and Drug Administration Fellowship Programs	0910–0780	02/29/2024
Endorser Status and Explicitness of Payment in Direct-to-Consumer Promotion	0910–0894	02/29/2024

Dated: March 22, 2021.

Lauren K. Roth,

Acting Principal Associate Commissioner for Policy.

[FR Doc. 2021–06266 Filed 3–25–21; 8:45 am]

BILLING CODE 4164–01–P

DEPARTMENT OF HEALTH AND HUMAN SERVICES

Food and Drug Administration

[Docket No. FDA–2020–N–2002]

Thomas J. Whalen: Final Debarment Order

AGENCY: Food and Drug Administration, HHS.

ACTION: Notice.

SUMMARY: The Food and Drug Administration (FDA) is issuing an order under the Federal Food, Drug, and Cosmetic Act (FD&C Act) debarring Thomas J. Whalen for a period of 10 years from importing or offering for import any drug into the United States. FDA bases this order on a finding that Mr. Whalen was convicted of multiple offenses; two of these are relevant to this debarment: One count of importation contrary of law-aiding and abetting and one count of healthcare fraud-aiding and abetting. The factual basis supporting Mr. Whalen's conviction is conduct relating to the importation into the United States of a drug or controlled substance. Mr. Whalen was given notice of the proposed debarment and was given an opportunity to request a hearing to show why he should not be debarred. As of January 13, 2021 (30 days after receipt of the notice), Mr. Whalen had not responded. Mr. Whalen's failure to respond and request a hearing constitutes a waiver of his right to a hearing concerning this matter.

DATES: This order is applicable March 26, 2021.

ADDRESSES: Submit applications for termination of debarment to the Dockets Management Staff (HFA–305), Food and Drug Administration, 5630 Fishers Lane, Rm. 1061, Rockville, MD 20852, 240–402–7500, or at *https://www.regulations.gov.*

FOR FURTHER INFORMATION CONTACT: Jaime Espinosa, Division of Enforcement (ELEM–4029), Office of Strategic Planning and Operational Policy, Office of Regulatory Affairs, Food and Drug Administration, 12420 Parklawn Dr., Rockville, MD 20857, 240–402–8743, or at *debarments@fda.hhs.gov.*

SUPPLEMENTARY INFORMATION:

I. Background

Section 306(b)(1)(D) of the FD&C Act (21 U.S.C. 335a(b)(1)(D)) permits debarment of an individual from importing or offering for import any drug into the United States if FDA finds, as required by section 306(b)(3)(C) of the FD&C Act, that the individual has been convicted of a felony for conduct relating to the importation into the United States of any drug or controlled substance. On September 15, 2020, Mr. Whalen was convicted, as defined in section 306(l)(1) of the FD&C Act, in the U.S. District Court for the Eastern District of Pennsylvania, when the court entered judgment against him for multiple offenses, two of which are relevant to this debarment: One count of importation contrary to law-aiding and abetting in violation of 18 U.S.C. 545 and 2, and one count of healthcare fraud-aiding and abetting in violation of 18 U.S.C. 1347 and 2.

FDA's finding that debarment is appropriate is based on the felony convictions referenced herein. The factual basis for this conviction is as follows: As contained in the information in Mr. Whalen's case, filed on October 25, 2019, to which he pleaded guilty, he was a doctor of osteopathy in the Commonwealth of Pennsylvania and the State of Delaware. From about January 2014 to about March 2018, Mr. Whalen engaged in a scheme to defraud Medicare, the U.S. Office of Personnel Management (OPM), and the Independence Blue Cross insurance company (IBC). Specifically, he purchased, imported into the United States, and distributed misbranded and non-FDA-approved injectable versions of REMICADE (infliximab), SYNVISC/SYNVISC ONE (hyaluronan), ORENCIA (abatacept), PROLIA/XGEVA (denosumab), and BONIVA (ibandronate sodium). He then injected his patients with these non-FDA-approved versions of these medications. Mr. Whalen billed Medicare, OPM, and IBC for the provision of the FDA-approved versions of these products.

As a result of this conviction, FDA sent Mr. Whalen, by United Parcel Service, on December 11, 2020, a notice proposing to debar him for a 10-year period from importing or offering for import any drug into the United States. The proposal was based on a finding under section 306(b)(3)(C) of the FD&C Act that Mr. Whalen's felony conviction for two felony counts under Federal law related to this debarment, specifically for one count of importation contrary to law-aiding and abetting and one count of healthcare fraud-aiding and abetting, was for conduct relating to the importation into the United States of any drug or controlled substance, because he illegally imported unapproved and misbranded drugs into the United States and then distributed those misbranded and unapproved drugs to consumers in the United States.

In proposing a debarment period, FDA weighed the considerations set forth in section 306(c)(3) of the FD&C Act that it considered applicable to Mr. Whalen's offenses and concluded that each felony offense warranted the imposition of a 5-year period of debarment, for a total debarment period of 10 years. The proposal informed Mr. Whalen of the proposed debarment and offered him an opportunity to request a hearing, providing him 30 days from the date of receipt of the letter in which to file the request, and advised him that failure to request a hearing constituted a waiver of the opportunity for a hearing and of any contentions concerning this action. Mr. Whalen received the proposal and notice of opportunity for

a hearing on December 14, 2020. Mr. Whalen failed to request a hearing within the timeframe prescribed by regulation and has, therefore, waived his opportunity for a hearing and waived any contentions concerning his debarment (21 CFR part 12).

II. Findings and Order

Therefore, the Assistant Commissioner, Office of Human and Animal Food Operations, under section 306(b)(3)(C) of the FD&C Act, under authority delegated to the Assistant Commissioner, finds that Mr. Whalen has been convicted of felonies under Federal law for conduct relating to the importation into the United States of any drug or controlled substance. FDA finds that the offenses should be accorded a debarment period of 10 years as provided by section 306(c)(2)(A)(iii) of the FD&C Act.

As a result of the foregoing finding, Mr. Whalen is debarred for a period of 10 years from importing or offering for import any drug into the United States, effective (see **DATES**). Pursuant to section 301(cc) of the FD&C Act (21 U.S.C. 331(cc)), the importing or offering for import into the United States of any drug or controlled substance by, with the assistance of, or at the direction of Mr. Whalen is a prohibited act.

Any application by Mr. Whalen for termination of debarment under section 306(d)(1) of the FD&C Act should be identified with Docket No. FDA–2020–N–2002 and sent to the Dockets Management Staff (see **ADDRESSES**). The public availability of information in these submissions is governed by 21 CFR 10.20(j).

Publicly available submissions will be placed in the docket and will be viewable at *https://www.regulations.gov* or at the Dockets Management Staff (see **ADDRESSES**) between 9 a.m. and 4 p.m., Monday through Friday, 240–402–7500.

Dated: March 19, 2021.

Lauren K. Roth,

Acting Principal Associate Commissioner for Policy.

[FR Doc. 2021–06219 Filed 3–25–21; 8:45 am]

BILLING CODE 4164–01–P

DEPARTMENT OF HEALTH AND HUMAN SERVICES

Food and Drug Administration

[Docket No. FDA–2020–N–2246]

Fee Rates Under the Over-the-Counter Monograph Drug User Fee Program for Fiscal Year 2021

AGENCY: Food and Drug Administration, HHS.

ACTION: Notice.

SUMMARY: The Food and Drug Administration (FDA or the Agency) is announcing the fee rates under the Over-the-Counter (OTC) Monograph Drug user fee program for fiscal year (FY) 2021. On March 27, 2020, new provisions were added to the Federal Food, Drug, and Cosmetic Act (FD&C Act) by the Coronavirus Aid, Relief, and Economic Security (CARES) Act, which authorize FDA to assess and collect user fees from qualifying manufacturers of OTC monograph drugs and submitters of OTC monograph order requests. FDA refers to the OTC Monograph Drug user fee program as ''OMUFA'' throughout this document. This notice publishes the OMUFA fee rates for FY 2021.

FOR FURTHER INFORMATION CONTACT: David Haas, Office of Financial Management, Food and Drug Administration, 4041 Powder Mill Rd., Rm. 61075, Beltsville, MD 20705–4304, 240–402–9845.

SUPPLEMENTARY INFORMATION:

I. Background

Section 744M of the FD&C Act (21 U.S.C. 379j-72), as added by the CARES Act, authorizes FDA to assess and collect: (1) Facility fees from qualifying owners of OTC monograph drug facilities and (2) fees from submitters of qualifying OTC monograph order requests. These fees are to support FDA's OTC monograph drug activities, which are detailed in section 744L(6) of the FD&C Act and include various FDA activities associated with OTC monograph drugs and inspection of facilities associated with such products. For OMUFA purposes:

- An OTC monograph drug is a nonprescription drug without an approved new drug application which is governed by the provisions of section 505G of the FD&C Act (21 U.S.C. 355h) (see section 744L(5) of the FD&C Act);
- An OTC monograph drug facility (MDF) is a foreign or domestic business or other entity that, in addition to meeting other criteria, is engaged in manufacturing or processing the finished dosage form of an OTC monograph drug (see section 744L(10) of the FD&C Act);
- A contract manufacturing organization (CMO) facility is an OTC monograph drug facility where neither the owner nor any affiliate of the owner or facility sells the OTC monograph drug produced at such facility directly to wholesalers, retailers, or consumers in the United States (see section 744L(2) of the FD&C Act); and
- An OTC Monograph Order Request (OMOR) is a request for an administrative order, with respect to an OTC monograph drug, which is submitted under section 505G(b)(5) of the FD&C Act (see section 744L(7) of the FD&C Act).

Under section 744M(a)(1)(A) of the FD&C Act, a facility fee for FY 2021 shall be assessed with respect to each facility that is identified as an OTC monograph drug facility during the period from January 2020 through December 2020. Consistent with the statute, FDA will assess and collect facility fees with respect to the two types of OTC monograph drug facilities—MDF and CMO facilities. A full facility fee will be assessed to each qualifying person that owns a facility identified as an MDF (see section 744M(a)(1)(A) of the FD&C Act), and a reduced facility fee of two-thirds will be assessed to each qualifying person that owns a facility identified as a CMO facility (see section 744M(a)(1)(B)(ii) of the FD&C Act). The facility fees are due 45 days after the date of publication of this notice (see section 744M(a)(1)(D)(i) of the FD&C Act).[1]

As discussed in greater detail below:

- OTC monograph drug facilities are exempt from FY 2021 facility fees if they had ceased OTC monograph drug activities, and updated their registration with FDA to that effect, prior to December 31, 2019 (see section 744M(a)(1)(B)(i) of the FD&C Act).
- Entities that registered with FDA during the Coronavirus Disease 2019 (COVID–19) pandemic whose sole activity with respect to OTC monograph drugs during the pandemic consists (or had consisted) of manufacturing OTC hand sanitizer products are not identified as OTC monograph drug facilities subject to OMUFA facility fees.[2]

In addition to facility fees, the Agency is authorized to assess and collect fees from submitters of OMORs, except for OMORs which request certain safety-related changes (as discussed below).

---

[1] FDA is required to publish OMUFA fee rates under section 744M(a)(4) of the FD&C Act. FDA published an earlier version of this notice in the **Federal Register** on December 29, 2020. That notice was withdrawn by the Department of Health and Human Services (HHS) on January 6, 2021 (see *https://www.federalregister.gov/documents/2021/01/06/2021-00030/withdrawal-of-fda-notice-regarding-fee-rates-under-the-over-the-counter-monograph-drug-user-fee*). FDA has updated and is republishing the OMUFA fee rates for FY 2021 consistent with the January 12, 2021, HHS notice described below (and with the concurrence of HHS that publication of this fee-setting notice does not require prior notice and comment).

[2] See HHS **Federal Register** notice of January 12, 2021, *https://www.federalregister.gov/documents/2021/01/12/2021-00237/notice-that-persons-that-entered-the-over-the-counter-drug-market-to-supply-hand-sanitizer-during.*

There are two levels of OMOR fees, based on whether the OMOR at issue is a Tier 1 or Tier 2 OMOR.[3]

For FY 2021, the OMUFA fee rates are as follows: Tier 1 OMOR fees ($500,000), Tier 2 OMOR fees ($100,000), MDF facility fees ($20,322), and CMO facility fees ($13,548). These fees are for the period from October 1, 2020, through September 30, 2021.[4] This document is issued pursuant to sections 744M(a)(4) and (c)(4)(A)[5] of the FD&C Act and describes the calculations used to set the OMUFA facility fees and OMOR fees for FY 2021 in accordance with the directives in the statute.

II. Facility Fee Revenue Amount for FY 2021

A. Base Fee Revenue Amount

Under OMUFA, FDA sets annual facility fees to generate the total facility fee revenues for each fiscal year established by section 744M(b) of the FD&C Act. The yearly base revenue amount is the starting point for setting annual facility fee rates. The base revenue amount for FY 2021 is $8,000,000 (see section 744M(b)(3)(A) of the FD&C Act).

B. Fee Revenue Adjustment for Inflation

Under OMUFA, the annual base revenue amount for facility fees is adjusted for inflation for FY 2022 and each subsequent FY (see section 744M(c)(1) of the FD&C Act). Because the adjustment for inflation does not apply until FY 2022, the FY 2021 facility fee revenue is not subject to an inflation adjustment by FDA.

C. Fee Revenue Adjustment for Additional Direct Cost

Under OMUFA, $14,000,000 is added to the facility fee revenues for FY 2021 to account for additional direct costs (see section 744M(c)(3)(A) of the FD&C Act).

D. Fee Revenue Adjustment for Operating Reserve

Under OMUFA, FDA may further increase the FY 2021 facility fee revenue and fees if such an adjustment is necessary in order to provide up to 3 weeks of operating reserves of carryover user fees for OTC monograph drug activities (see section 744M(c)(2)(A) of the FD&C Act). However, under the statute, if the carryover balance exceeds 10 weeks of operating reserves, FDA is required to decrease fees to provide for not more than 10 weeks of operating reserves of carryover user fees (see section 744M(c)(2)(C) of the FD&C Act).

FDA is applying the operating reserve adjustment to increase the FY 2021 facility fee revenue and fees to enable the Agency to maintain 3 weeks of operating reserves of carryover user fees. To determine the 3-week operating reserve amount, the FY 2021 annual base revenue adjusted for additional direct costs (*i.e.,* $8,000,000 + $14,000,000 = $22,000,000), is divided by 52, and then multiplied by 3. The 3-week operating reserve amount for FY 2021 is $1,269,231.

As a result of the above calculations, the final FY 2021 OMUFA target facility fee revenue is $23,269,000 (rounded to the nearest thousand dollars).

III. Determination of FY 2021 OMOR Fees

Under OMUFA, the FY 2021 Tier 1 OMOR fee is $500,000 and the Tier 2 OMOR fee is $100,000 (see section 744M(a)(2)(A)(i) and (ii) of the FD&C Act, respectively). OMOR fees are not included in the OMUFA target revenue calculation, which is based on the facility fees (see section 744M(b)(1) of the FD&C Act).

An OMOR fee is generally assessed to each person who submits an OMOR (see section 744M(a)(2)(A) of the FD&C Act). OMOR fees are due on the date of the submission of the OMOR (see section 744M(a)(2)(B) of the FD&C Act). The payor should submit the OMOR fee that applies to the type of OMOR they are submitting (*i.e.,* Tier 1 or Tier 2). FDA will determine whether the requestor has submitted the appropriate OMOR fee following receipt of the OMOR and the fee.

An OMOR fee will not be assessed if the OMOR seeks to make certain safety changes with respect to an OTC monograph drug. Specifically, no fee will be assessed if FDA finds that the OMOR seeks to change the drug facts labeling of an OTC monograph drug in a way that would add to or strengthen: (1) A contraindication, warning, or precaution; (2) a statement about risk associated with misuse or abuse; or (3) an instruction about dosage and administration that is intended to increase the safe use of the OTC monograph drug (see section 744M(a)(2)(C) of the FD&C Act).

IV. Facility Fee Calculations

A. Facility Fee Revenues and Fees

For FY 2021, facility fee rates are being established to generate a total target revenue amount, as determined under the statute, equal to $23,269,000 (rounded to the nearest thousand dollars). FDA used the methodology described below to determine the appropriate number of MDF and CMO facilities to be used in setting the OMUFA facility fees for FY 2021. FDA took into consideration that the CMO facility fee is equal to two-thirds of the amount of the MDF facility fee (see section 744M(a)(1)(B)(ii) of the FD&C Act).

B. Calculating the Number of Qualifying Facilities and Setting the Facility Fees

Under the statute, certain information submitted to FDA for drug establishment registration purposes under section 510 of the FD&C Act is also used for OMUFA fee-setting (see section 744M(d) of the FD&C Act). Thus, for FY 2021, FDA utilized the Agency's Electronic Drug Registration and Listing System (eDRLS) to calculate the number of qualifying MDF or CMO facilities that engage in the manufacturing or processing of the finished dosage form of an OTC monograph drug. In order to apply the statutory fee-setting calculations, FDA assessed which OTC monograph drug facilities had selected in eDRLS the business operation qualifiers of ''manufactures human over-the-counter drug products produced under a monograph'' or ''contract manufacturing for human over-the-counter drug products produced under a monograph'' and indicated at least one of the following business operations: finished dosage form manufacture, label, manufacture, pack, relabel, or repack.[6] FDA analyzed eDRLS

[3] Under OMUFA, a Tier 1 OMOR is defined as any OMOR which is not a Tier 2 OMOR (see section 744L(8) of the FD&C Act). Tier 2 OMORs are detailed in section 744L(9) of the FD&C Act.

[4] These OMUFA fees are for FY 2021, per section 744M(a) of the FD&C Act.

[5] Although under section 744M(c)(4)(A) of the FD&C Act, FDA was to publish this notice not later than the second Monday in May 2020, we note that under section 744M(f)(1) of the FD&C Act, OMUFA fees ''shall be collected and available for obligation only to the extent and in the amount provided in advance in appropriations Acts.'' An appropriation of FY 2021 OMUFA fees was provided under section 123 of the Continuing Appropriations Act, 2021, Division A of Public Law 116–159 (October 1, 2020). Additionally, as described above, this notice republishes the FY 2021 OMUFA fees following withdrawal of the Agency's earlier December 29, 2020, fee notice.

[6] *See* section 744L(10)(A); see also section 744L(10)(A)(iii) of the FD&C Act, excluding from the definition of ''OTC monograph drug facility'' those facilities whose manufacturing or processing consists solely of a narrow range of specified activities (*e.g.,* placement of outer overpackaging on products already in final packaged form); *cf* section 744A(6)(A)(ii) of the FD&C Act. *See also* 21 CFR 207.1 (addressing drug establishment registration), stating that ''[m]anufacture means each step in the manufacture, preparation, propagation, compounding, or processing of a drug,'' and indicating that ''the term 'manufacture, preparation, propagation, compounding, or processing,' as used in section 510 of the Federal Food, Drug, and Cosmetic Act, includes relabeling, repackaging, and salvaging activities.''

registration data from January 1, 2020, through December 31, 2020,[7] based on information provided by facilities in eDRLS.

Those facilities that only manufacture the Active Pharmaceutical Ingredient (API) of an OTC monograph drug do not meet the definition of an OTC monograph drug facility (see section 744L(10)(A)(i)(II)) of the FD&C Act). Likewise, a facility is not an OTC monograph drug facility if its only manufacturing or processing activities are one or more of the following: (1) Production of clinical research supplies; (2) testing; or (3) placement of outer packaging on packages containing multiple products, for such purposes as creating multipacks, when each monograph drug product contained within the overpackaging is already in a final packaged form prior to placement in the outer overpackaging (see section 744L(10)(A)(iii) of the FD&C Act).

Further, in a January 12, 2021, **Federal Register** notice, the Department of Health and Human Services (HHS) clarified that ''persons that entered into the over-the-counter drug industry for the first time in order to supply hand sanitizers during the COVID–19 Public Health Emergency are not persons subject to the facility fee the Secretary is authorized to collect'' under section 744M of the FD&C Act.[8] As the January 12, 2021, HHS notice explained, persons that were not registered with FDA as drug manufacturers prior to the COVID–19 Public Health Emergency, which then later registered with FDA for the purpose of producing hand sanitizers, ''are not 'identified . . .facilit[ies]' under section 744M of the FD&C Act, 21 U.S.C. 379j-72, and are thus not subject to the facility fee contained therein'' (86 FR 2421). As further explained in the HHS notice, ''imposing facility fees on these entities is inconsistent with Congress' stated intent elsewhere in the CARES Act.'' Section 2308 of the CARES Act provides a temporary exemption from excise taxes for distilled spirits ''use[d] in or contained in hand sanitizer produced and distributed in a manner consistent with any guidance issued by the Food and Drug Administration that is related to the outbreak of [COVID–19].'' As stated in the HHS notice, ''[i]t is unlikely Congress intended to save these entities from excise taxes only to impose tens of thousands of dollars in facility fees from an unfamiliar regulator.'' (86 FR 2420 at 2421)

Accordingly, as stated in the January 12, 2021, HHS Notice, FDA will not assess OMUFA facility fees upon those firms that first registered with FDA on or after the January 27, 2020 declaration of the COVID–19 Public Health Emergency (PHE),[9] *solely* for purposes of manufacturing hand sanitizer products[10] during the PHE.[11] We note, however, that under the FD&C Act, whether an entity is subject to OMUFA fees has no bearing on whether the entity or the entity's products are subject to other requirements under the FD&C Act. FDA will continue to use its regulatory compliance and enforcement tools to protect consumers, including from potentially dangerous or subpotent hand sanitizers.

In addition, FDA will not assess a facility fee if the identified OTC monograph drug facility: (1) Has ceased all activities related to OTC monograph drugs prior to December 31 of the year immediately preceding the applicable fiscal year and (2) has updated its eDRLS registration to reflect that change (per section 744M(a)(1)(B)(i) of the FD&C Act). As the applicable fiscal year for fee-setting under this notice is FY 2021, the year immediately preceding the applicable fiscal year is FY 2020. December 31 of FY 2020 is December 31, 2019. Thus, FDA will not assess a FY 2021 facility fee with respect to an OTC monograph drug facility that, prior to December 31, 2019, had ceased all activities related to OTC monograph drugs and updated its eDRLS registration to that effect.

FDA considered a number of factors that could affect collection of the target revenue, including that FY 2021 is the first year of this new user fee program and uncertainties related to the effects of the COVID–19 PHE. In undertaking the statutorily-directed fee calculations, the Agency made certain assumptions, including that: (1) Facilities using expired business operation qualifier codes within their electronic registration (also known as Structured Product Labeling) codes in eDRLS were no longer manufacturing and marketing OTC monograph drugs; (2) facilities that have deregistered in eDRLS have exited the market; (3) facilities that FDA believes registered incorrectly as OTC monograph drug facilities (for example, because the associated drug listings for these facilities did not include OTC monograph drugs but instead indicated such products as OTC drug products under an approved drug application or OTC animal drug products) were not engaged in manufacturing or processing the finished dosage form of an OTC monograph drug; and (4) facilities that registered but did not have an active OTC monograph drug product listing associated in their registration profile were not manufacturing or processing such drug products.

Each establishment paying the facility fee is counted as one fee-paying unit. The total estimate of fee-paying units is further analyzed to determine the number of respective MDF and CMO fee-paying units.

Based on the data obtained from eDRLS, FDA estimates there will be 1,184 fee-paying units. The Agency estimates that 90 percent (1,184 × .90 = 1,066, rounded) will incur the MDF fee and 10 percent (1,184 × .10 = 118, rounded) will incur the CMO fee.

To determine the number of full fee-paying equivalents (the denominator) to be used in setting the OMUFA fees, FDA assigns a value of 1 to each MDF (1,066) and a value of ⅔ to each CMO (118 × ⅔ = 79) for a full facility equivalent of 1,145 (rounded). The target fee revenue of $23,269,000 is then divided by 1,145 for an MDF fee of $20,322 and a CMO fee of $13,548.

V. Fee Schedule for FY 2021

The fee rates for FY 2021 are displayed in table 1.

[7] Under section 744M(a)(1) of the FD&C Act, ''Each person that owns a facility identified as an OTC monograph drug facility on December 31 of the fiscal year or at any time during the preceding 12-month period shall be assessed an annual fee for each such facility.'' For purposes of FY 2021 facility fees, that time period is January 1, 2020, through December 31, 2020.

[8] See *https://www.federalregister.gov/documents/2021/01/12/2021-00237/notice-that-persons-that-entered-the-over-the-counter-drug-market-to-supply-hand-sanitizer-during* (86 FR 2420).

[9] See *https://www.phe.gov/emergency/news/healthactions/phe/Pages/2019-nCoV.aspx.*

[10] The term ''hand sanitizer'' commonly refers to consumer antiseptic rubs. However, because the HHS notice referred to ''persons that entered the over-the-counter drug market to supply hand sanitizer products in response to the COVID–19 Public Health Emergency'' (86 FR 2420), we are using the same terminology—''hand sanitizer products''—to refer to OTC monograph drug products intended for use (without water) as antiseptic hand rubs or antiseptic hand wipes by consumers or health care personnel, including products manufactured or prepared consistent with the Agency's ''Temporary Policy for Preparation of Certain Alcohol-Based Hand Sanitizer Products During the Public Health Emergency (COVID–19) Guidance for Industry'' (see *https://www.fda.gov/media/136289/download*). Our use of the term ''hand sanitizer products'' in this notice to refer to antiseptic hand rubs and antiseptic hand wipes intended for use by consumers or health care personnel does not alter any existing regulatory distinctions between these products.

[11] *See* 86 FR 2420. The January 12, 2021, HHS notice explained that fees would be assessed on entities that ''manufacture, distribute, and sell over-the-counter drugs in addition to hand sanitizer'' and entities that ''continue to manufacture (as opposed to hold, distribute, or sell existing inventories) hand sanitizer products as of December 31 of the year immediately following the year during which the COVID–19 Public Health Emergency is terminated.''

TABLE 1—FEE SCHEDULE FOR FY 2021

Fee category	FY 2021 fee rates
OMOR:	
Tier 1	$500,000
Tier 2	100,000
Facility Fees:	
MDF	20,322
CMO	13,548

VI. Fee Payment Options and Procedures

The new fee rates are for the period from October 1, 2020, through September 30, 2021. To pay the OMOR, MDF, and CMO fees, complete an OTC Monograph User Fee Cover Sheet, available at: *https://userfees.fda.gov/OA_HTML/omufaCAcdLogin.jsp.* A user fee identification (ID) number will be generated. Payment must be made in U.S. currency by electronic check or wire transfer, payable to the order of the Food and Drug Administration. The preferred payment method is online using electronic check (Automated Clearing House (ACH) also known as eCheck) or credit card for payments under $25,000 (Discover, VISA, MasterCard, American Express).

FDA has partnered with the U.S. Department of the Treasury to use *Pay.gov*, a web-based payment application, for online electronic payment. The *Pay.gov* feature is available on the FDA website after completing the OTC Monograph User Fee Cover Sheet and generating the user fee ID number. Secure electronic payments can be submitted using the User Fees Payment Portal at *https://userfees.fda.gov/pay* (*Note:* only full payments are accepted. No partial payments can be made online). Once an invoice is located, ''Pay Now'' should be selected to be redirected to *Pay.gov*. Electronic payment options are based on the balance due. Payment by credit card is available for balances that are less than $25,000. If the balance exceeds this amount, only the ACH option is available. Payments must be made using U.S. bank accounts as well as U.S. credit cards.

For payments made by wire transfer, include the unique user fee ID number to ensure that the payment is applied to the correct fee(s). Without the unique user fee ID number, the payment may not be applied, which could result in FDA not filing an OMOR request, for example, and other penalties. The originating financial institution may charge a wire transfer fee. Applicable wire transfer fees must be included with payment to ensure fees are fully paid. Questions about wire transfer fees should be addressed to the financial institution. The account information for wire transfers is as follows: U.S. Department of the Treasury, TREAS NYC, 33 Liberty St., New York, NY 10045, Acct. No.: 75060099, Routing No.: 021030004, SWIFT: FRNYUS33. If needed, FDA's tax identification number is 53–0196965.

If you are assessed an FY 2021 OMUFA facility fee and believe your facility is not an OTC monograph drug facility as described in this notice, please contact *CDERCollections@fda.hhs.gov.*

Dated: March 23, 2021.

Lauren K. Roth,

Acting Principal Associate Commissioner for Policy.

[FR Doc. 2021–06361 Filed 3–25–21; 8:45 am]

BILLING CODE 4164–01–P

DEPARTMENT OF HEALTH AND HUMAN SERVICES

Food and Drug Administration

[Docket No. FDA–2020–N–1682]

Ursula Wing: Final Debarment Order

AGENCY: Food and Drug Administration, HHS.

ACTION: Notice.

SUMMARY: The Food and Drug Administration (FDA) is issuing an order under the Federal Food, Drug, and Cosmetic Act (FD&C Act) debarring Ursula Wing for a period of 5 years from importing or offering for import any drug into the United States. FDA bases this order on a finding that Ms. Wing was convicted of one felony count under Federal law for conspiracy to defraud the United States. Ms. Wing was given notice of the proposed debarment and an opportunity to request a hearing to show why she should not be debarred within the timeframe prescribed by regulation. Ms. Wing failed to request a hearing. Ms. Wing's failure to respond and request a hearing constitutes a waiver of her right to a hearing concerning this matter.

DATES: This order is applicable March 26, 2021.

ADDRESSES: Submit applications for termination of debarment to the Dockets Management Staff (HFA–305), Food and Drug Administration, 5630 Fishers Lane, Rm. 1061, Rockville, MD 20852, 240–402–7500, or at *https://www.regulations.gov.*

FOR FURTHER INFORMATION CONTACT: Jaime Espinosa, Division of Enforcement (ELEM–4029), Office of Strategic Planning and Operational Policy, Office of Regulatory Affairs, Food and Drug Administration, 12420 Parklawn Dr., Rockville, MD 20857, 240–402–8743, or at *debarments@fda.hhs.gov.*

SUPPLEMENTARY INFORMATION:

I. Background

Section 306(b)(1)(D) of the FD&C Act (21 U.S.C. 335a(b)(1)(D)) permits debarment of an individual from importing or offering for import any drug into the United States if FDA finds, as required by section 306(b)(3)(C) of the FD&C Act, that the individual has been convicted of a felony for conduct relating to the importation into the United States of any drug or controlled substance. On July 10, 2020, Ms. Wing was convicted, as defined in section 306(l)(1) of the FD&C Act, in the U.S. District Court for the Western District of Wisconsin, when the court accepted her plea of guilty and entered judgment against her for the felony offense of conspiracy to defraud the United States in violation of 18 U.S.C. 371.

FDA's finding that debarment is appropriate is based on this felony conviction referenced herein. The factual basis for this conviction is as follows: As contained in count 1 of the indictment in Ms. Wing's case, filed on June 26, 2019, to which she pleaded guilty, from in or about June 2016 and continuing to on or about June 21, 2018, she operated a blog under the name ''the Macrobiotic Stoner'' and a fake jewelry business under the name ''Morocco International Inc.'' Ms. Wing used both entities to sell unapproved and misbranded prescription drugs to consumers in the United States and around the world and to process payments for those drugs. Throughout the course of this conspiracy Ms. Wing did not possess a valid wholesale drug distribution license, pharmacy license, or a license to prescribe prescription drugs. She was also not registered under section 510 of the FD&C Act (21 U.S.C. 360) as a person who owns or operates an establishment engaged in the manufacture, preparation, propagation, compounding, or processing of a drug.

As part of this conspiracy, Ms. Wing imported foreign-sourced prescription drugs in wholesale quantities from India into the United States. The imported drugs contained U.S. Customs Declaration Forms falsely stating that the contents were ''personal supply medication'' and did not contain any dangerous articles or articles prohibited by postal or customs regulations. The drugs Ms. Wing imported were foreign versions of mifepristone and misoprostol. There are two 200 mg mifepristone tablets that are FDA-

approved for use in a regimen with misoprostol for the medical termination of early pregnancy. There are no approved drug applications pursuant to section 505 of the FD&C Act (21 U.S.C. 355) in effect for the mifepristone and misoprostol Ms. Wing imported and sold via her website. In addition to being unapproved, the drugs sold via Ms. Wing's website were also misbranded because they failed to bear adequate directions for their intended use (see 21 U.S.C. 352(f)(1) and 21 CFR 201.5) and are prescription medications that were dispensed without a prescription from a practitioner licensed by law to administer such drugs (21 U.S.C. 353(b)(1) and 331(k)).

Ms. Wing broke down the bulk shipments of unapproved and misbranded drugs she received from India and repackaged them into retail quantities which she then shipped to customers in the United States and around the world via U.S. mail. To disguise her sales, Ms. Wing created a fake company called ''Fatima's Bread Basket,'' which she listed as the shipper on the envelope going to the customer. Ms. Wing then inserted a piece of jewelry in the shipping envelope to serve as the cover piece of merchandise being mailed to the customer. She packaged the unapproved and misbranded prescription drugs in a smaller packet that was in a hidden panel and taped to the inside of the shipping envelope. Ms. Wing disguised the nature of the item being purchased by listing on the invoice alternate jewelry product names, each of which had a code to indicate the actual item (unapproved and misbranded drug(s)) being ordered.

As a result of this conviction, FDA sent Ms. Wing, by certified mail on October 15, 2020, a notice proposing to debar her for a 5-year period from importing or offering for import any drug into the United States. The proposal was based on a finding under section 306(b)(3)(C) of the FD&C Act that Ms. Wing's conviction for one felony count under Federal law, for conspiracy to defraud the United States, was for conduct relating to the importation into the United States of any drug or controlled substance because she illegally smuggled unapproved and misbranded prescription drugs from India into the United States and then distributed those misbranded and unapproved drugs to consumers both in the United States and abroad.

In proposing a debarment period, FDA weighed the considerations set forth in section 306(c)(3) of the FD&C Act that it considered applicable to Ms. Wing's offense, and concluded that this felony offense warranted the imposition of a 5-year period of debarment. The proposal informed Ms. Wing of the proposed debarment and offered her an opportunity to request a hearing, providing her 30 days from the date of receipt of the letter in which to file the request, and advised her that failure to request a hearing constituted a waiver of the opportunity for a hearing and of any contentions concerning this action. Ms. Wing received the proposal and notice of opportunity for a hearing on October 19, 2020. Ms. Wing failed to request a hearing within the timeframe prescribed by regulation and has, therefore, waived her opportunity for a hearing and waived any contentions concerning her debarment (21 CFR part 12).

II. Findings and Order

Therefore, the Assistant Commissioner, Office of Human and Animal Food Operations, under section 306(b)(3)(C) of the FD&C Act, under authority delegated to the Assistant Commissioner, finds that Ms. Ursula Wing has been convicted of a felony under Federal law for conduct relating to the importation into the United States of any drug or controlled substance. FDA finds that the offense should be accorded a debarment period of 5 years as provided by section 306(c)(2)(A)(iii) of the FD&C Act.

As a result of the foregoing finding, Ms. Wing is debarred for a period of 5 years from importing or offering for import any drug into the United States, effective (see **DATES**). Pursuant to section 301(cc) of the FD&C Act (21 U.S.C. 331(cc)), the importing or offering for import into the United States of any drug or controlled substance by, with the assistance of, or at the direction of Ms. Wing is a prohibited act.

Any application by Ms. Wing for termination of debarment under section 306(d)(1) of the FD&C Act should be identified with Docket No. FDA–2020–N–1682 and sent to the Dockets Management Staff (see **ADDRESSES**). The public availability of information in these submissions is governed by 21 CFR 10.20(j).

Publicly available submissions will be placed in the docket and will be viewable at *https://www.regulations.gov* or at the Dockets Management Staff (see **ADDRESSES**) between 9 a.m. and 4 p.m., Monday through Friday, 240–402–7500.

Dated: March 19, 2021.

Lauren K. Roth,

Acting Principal Associate Commissioner for Policy.

[FR Doc. 2021–06258 Filed 3–25–21; 8:45 am]

BILLING CODE 4164–01–P

DEPARTMENT OF HEALTH AND HUMAN SERVICES

Food and Drug Administration

[Docket No. FDA–2021–N–0273]

Arthritis Advisory Committee; Notice of Meeting; Establishment of a Public Docket; Request for Comments

AGENCY: Food and Drug Administration, HHS.

ACTION: Notice; establishment of a public docket; request for comments.

SUMMARY: The Food and Drug Administration (FDA) announces a forthcoming public advisory committee meeting of the Arthritis Advisory Committee. The general function of the committee is to provide advice and recommendations to FDA on regulatory issues. The meeting will be open to the public. FDA is establishing a docket for public comment on this document.

DATES: The meeting will take place virtually on May 6, 2021, from 10 a.m. to 4:15 p.m. Eastern Time.

ADDRESSES: Please note that due to the impact of this COVID–19 pandemic, all meeting participants will be joining this advisory committee meeting via an online teleconferencing platform. Answers to commonly asked questions about FDA advisory committee meetings may be accessed at: *https://www.fda.gov/AdvisoryCommittees/AboutAdvisoryCommittees/ucm408555.htm.*

FDA is establishing a docket for public comment on this meeting. The docket number is FDA–2021–N–0273. The docket will close May 5, 2021. Submit either electronic or written comments on this public meeting by May 5, 2021. Please note that late, untimely filed comments will not be considered. Electronic comments must be submitted on or before May 5, 2021. The *https://www.regulations.gov* electronic filing system will accept comments until 11:59 p.m. Eastern Time at the end of May 5, 2021. Comments received by mail/hand delivery/courier (for written/paper submissions) will be considered timely if they are postmarked or the delivery service acceptance receipt is on or before that date.

Comments received on or before April 22, 2021, will be provided to the committee. Comments received after that date will be taken into consideration by FDA. In the event that the meeting is cancelled, FDA will continue to evaluate any relevant applications or information, and consider any comments submitted to the docket, as appropriate.

You may submit comments as follows:

Electronic Submissions

Submit electronic comments in the following way:

• *Federal eRulemaking Portal: https://www.regulations.gov.* Follow the instructions for submitting comments. Comments submitted electronically, including attachments, to *https://www.regulations.gov* will be posted to the docket unchanged. Because your comment will be made public, you are solely responsible for ensuring that your comment does not include any confidential information that you or a third party may not wish to be posted, such as medical information, your or anyone else's Social Security number, or confidential business information, such as a manufacturing process. Please note that if you include your name, contact information, or other information that identifies you in the body of your comments, that information will be posted on *https://www.regulations.gov.*

• If you want to submit a comment with confidential information that you do not wish to be made available to the public, submit the comment as a written/paper submission and in the manner detailed (see ''Written/Paper Submissions'' and ''Instructions'').

Written/Paper Submissions

Submit written/paper submissions as follows:

• *Mail/Hand Delivery/Courier (for written/paper submissions):* Dockets Management Staff (HFA–305), Food and Drug Administration, 5630 Fishers Lane, Rm. 1061, Rockville, MD 20852.

• For written/paper comments submitted to the Dockets Management Staff, FDA will post your comment, as well as any attachments, except for information submitted, marked and identified, as confidential, if submitted as detailed in ''Instructions.''

Instructions: All submissions received must include the Docket No. FDA–2021–N–0273 for ''Arthritis Advisory Committee; Notice of Meeting; Establishment of a Public Docket; Request for Comments.'' Received comments, those filed in a timely manner (see **ADDRESSES**), will be placed in the docket and, except for those submitted as ''Confidential Submissions,'' publicly viewable at *https://www.regulations.gov* or at the Dockets Management Staff between 9 a.m. and 4 p.m., Monday through Friday, 240–402–7500.

• Confidential Submissions—To submit a comment with confidential information that you do not wish to be made publicly available, submit your comments only as a written/paper submission. You should submit two copies total. One copy will include the information you claim to be confidential with a heading or cover note that states ''THIS DOCUMENT CONTAINS CONFIDENTIAL INFORMATION.'' FDA will review this copy, including the claimed confidential information, in its consideration of comments. The second copy, which will have the claimed confidential information redacted/blacked out, will be available for public viewing and posted on *https://www.regulations.gov.* Submit both copies to the Dockets Management Staff. If you do not wish your name and contact information be made publicly available, you can provide this information on the cover sheet and not in the body of your comments and you must identify the information as ''confidential.'' Any information marked as ''confidential'' will not be disclosed except in accordance with 21 CFR 10.20 and other applicable disclosure law. For more information about FDA's posting of comments to public dockets, see 80 FR 56469, September 18, 2015, or access the information at: *https://www.govinfo.gov/content/pkg/FR-2015-09-18/pdf/2015-23389.pdf.*

Docket: For access to the docket to read background documents or the electronic and written/paper comments received, go to *https://www.regulations.gov* and insert the docket number, found in brackets in the heading of this document, into the ''Search'' box and follow the prompts and/or go to the Dockets Management Staff, 5630 Fishers Lane, Rm. 1061, Rockville, MD 20852, 240–402–7500.

FOR FURTHER INFORMATION CONTACT: Moon Hee V. Choi, Center for Drug Evaluation and Research, Food and Drug Administration, 10903 New Hampshire Ave., Bldg. 31, Rm. 2417, Silver Spring, MD 20993–0002, email: *AAC@fda.hhs.gov,* 301–796–2894, or FDA Advisory Committee Information Line, 1–800–741–8138 (301–443–0572 in the Washington, DC area). A notice in the **Federal Register** about last-minute modifications that impact a previously announced advisory committee meeting cannot always be published quickly enough to provide timely notice. Therefore, you should always check FDA's website at *https://www.fda.gov/AdvisoryCommittees/default.htm* and scroll down to the appropriate advisory committee meeting link, or call the advisory committee information line to learn about possible modifications before coming to the meeting.

SUPPLEMENTARY INFORMATION:

Agenda: The meeting presentations will be heard, viewed, captioned, and recorded through an online teleconferencing platform. The committee will discuss new drug application (NDA) 214487, for avacopan oral capsules, submitted by ChemoCentryx, Inc., for the treatment of anti-neutrophil cytoplasmic antibody-associated vasculitis.

FDA intends to make the meeting's background material and pre-recorded presentations available to the public no later than 2 business days before the meeting. The pre-recorded presentations will be viewed by the committee prior to the meeting and will not be replayed on meeting day. If FDA is unable to post the background material and/or pre-recorded presentations on its website prior to the meeting, the background material and/or pre-recorded presentations will be made publicly available on FDA's website at the time of the advisory committee meeting. The meeting will include brief summaries of the pre-recorded presentations. The pre-recorded presentations and brief summaries will include slide presentations with audio components to allow the presentation of materials in a manner that most closely resembles an in-person advisory committee meeting. Background material and the link to the online teleconference meeting room will be available at *https://www.fda.gov/AdvisoryCommittees/Calendar/default.htm.* Scroll down to the appropriate advisory committee meeting link.

Procedure: Interested persons may present data, information, or views, orally or in writing, on issues pending before the committee. All electronic and written submissions submitted to the Docket (see **ADDRESSES**) on or before April 22, 2021, will be provided to the committee. Oral presentations from the public will be scheduled between approximately 1:15 p.m. and 2:15 p.m. Eastern Time on May 6, 2021. Those individuals interested in making formal oral presentations should notify the contact person and submit a brief statement of the general nature of the evidence or arguments they wish to present, the names and addresses of proposed participants, and an indication of the approximate time requested to make their presentation on or before April 14, 2021. Time allotted for each presentation may be limited. If the number of registrants requesting to speak is greater than can be reasonably accommodated during the scheduled open public hearing session, FDA may conduct a lottery to determine the speakers for the scheduled open public hearing session. The contact person will

notify interested persons regarding their request to speak by April 15, 2021.

For press inquiries, please contact the Office of Media Affairs at *fdaoma@fda.hhs.gov* or 301–796–4540.

FDA welcomes the attendance of the public at its advisory committee meetings and will make every effort to accommodate persons with disabilities. If you require accommodations due to a disability, please contact Moon Hee V. Choi (see **FOR FURTHER INFORMATION CONTACT**) at least 7 days in advance of the meeting.

FDA is committed to the orderly conduct of its advisory committee meetings. Please visit our website at *https://www.fda.gov/AdvisoryCommittees/AboutAdvisoryCommittees/ucm111462.htm* for procedures on public conduct during advisory committee meetings.

Notice of this meeting is given under the Federal Advisory Committee Act (5 U.S.C. app. 2).

Dated: March 22, 2021.

Lauren K. Roth,

Acting Principal Associate Commissioner for Policy.

[FR Doc. 2021–06265 Filed 3–25–21; 8:45 am]

BILLING CODE 4164–01–P

DEPARTMENT OF HEALTH AND HUMAN SERVICES

National Institutes of Health

National Institute of Allergy and Infectious Diseases; Notice of Closed Meeting

Pursuant to section 10(d) of the Federal Advisory Committee Act, as amended, notice is hereby given of the following meeting.

The meeting will be closed to the public in accordance with the provisions set forth in sections 552b(c)(4) and 552b(c)(6), Title 5 U.S.C., as amended. The grant applications and the discussions could disclose confidential trade secrets or commercial property such as patentable material, and personal information concerning individuals associated with the grant applications, the disclosure of which would constitute a clearly unwarranted invasion of personal privacy.

Name of Committee: National Institute of Allergy and Infectious Diseases Special Emphasis Panel; Clinical Trials in Organ Transplantation in Children and Adults (CTOT–CA) (U01 Clinical Trial Optional).

Date: April 22–23, 2021.

Time: 9:00 a.m. to 5:00 p.m.

Agenda: To review and evaluate grant applications.

Place: National Institute of Allergy and Infectious Diseases, National Institutes of Health, 5601 Fishers Lane, Room 3G31B, Rockville, MD 20892 (Virtual Meeting).

Contact Person: James T. Snyder, Ph.D., Scientific Review Officer, Scientific Review Program, Division of Extramural Activities, National Institute of Allergy and Infectious Diseases, National Institutes of Health, 5601 Fishers Lane, Room 3G31B, Rockville, MD 20852, (240) 669–5060, *james.snyder@nih.gov.*

(Catalogue of Federal Domestic Assistance Program Nos. 93.855, Allergy, Immunology, and Transplantation Research; 93.856, Microbiology and Infectious Diseases Research, National Institutes of Health, HHS)

Dated: March 22, 2021.

Tyeshia M. Roberson,

Program Analyst, Office of Federal Advisory Committee Policy.

[FR Doc. 2021–06282 Filed 3–25–21; 8:45 am]

BILLING CODE 4140–01–P

DEPARTMENT OF HEALTH AND HUMAN SERVICES

National Institutes of Health

National Cancer Institute; Notice of Closed Meetings

Pursuant to section 10(d) of the Federal Advisory Committee Act, as amended, notice is hereby given of the following meetings.

The meetings will be closed to the public in accordance with the provisions set forth in sections 552b(c)(4) and 552b(c)(6), Title 5 U.S.C., as amended. The grant applications and the discussions could disclose confidential trade secrets or commercial property such as patentable material, and personal information concerning individuals associated with the grant applications, the disclosure of which would constitute a clearly unwarranted invasion of personal privacy.

Name of Committee: National Cancer Institute Special Emphasis Panel; Cancer Center Support Grant (P30).

Date: May 5, 2021.

Time: 12:00 p.m. to 2:00 p.m.

Agenda: To review and evaluate grant applications.

Place: National Cancer Institute at Shady Grove, 9609 Medical Center Drive, Room 7W124, Rockville, Maryland 20850 (Telephone Conference Call).

Contact Person: David G. Ransom, Ph.D., Chief, Special Review Branch, Resources and Training Review Branch, Division of Extramural Activities, National Cancer Institute, NIH, 9609 Medical Center Drive, Room 7W124, Rockville, Maryland 20850, 240–276–6351, *david.ransom@nih.gov.*

Name of Committee: National Cancer Institute Special Emphasis Panel; Assay Validation of High-Quality Markers for Clinical Studies in Cancer (UH2/UH3).

Date: May 12, 2021.

Time: 10:00 a.m. to 4:00 p.m.

Agenda: To review and evaluate grant applications.

Place: National Cancer Institute at Shady Grove, 9609 Medical Center Drive, Room 7W264, Rockville, Maryland 20850 (Telephone Conference Call).

Contact Person: Ombretta Salvucci, Ph.D., Scientific Review Officer, Special Review Branch, Division of Extramural Activities, National Cancer Institute, NIH, 9609 Medical Center Drive, Room 7W264, Rockville, Maryland 20850, 240–276–7286, *salvucco@mail.nih.gov.*

Name of Committee: National Cancer Institute Special Emphasis Panel; Engineered Biology for Cancer Applications.

Date: May 13, 2021.

Time: 10:00 a.m. to 5:00 p.m.

Agenda: To review and evaluate grant applications.

Place: National Cancer Institute at Shady Grove, 9609 Medical Center Drive, Room 7W114, Rockville, Maryland 20850 (Telephone Conference Call).

Contact Person: Jeffrey E. DeClue, Ph.D., Scientific Review Officer, Research Technology and Contract Review Branch, Division of Extramural Activities, 9609 Medical Center Drive, Room 7W114, National Cancer Institute, NIH, Rockville, Maryland 20850, 240–276–6371, *decluej@mail.nih.gov.*

Name of Committee: National Cancer Institute Special Emphasis Panel; Cancer Intervention and Surveillance Modeling Network (CISNET) Incubator Program for New Cancer Sites (U01).

Date: May 17, 2021.

Time: 12:00 p.m. to 3:00 p.m.

Agenda: To review and evaluate grant applications.

Place: National Cancer Institute at Shady Grove, 9609 Medical Center Drive, Room 7W248, Rockville, Maryland 20850 (Telephone Conference Call).

Contact Person: Shree Ram Singh, Ph.D., Scientific Review Officer, Special Review Branch, Division of Extramural Activities, 9609 Medical Center Drive, Room 7W248, National Cancer Institute, NIH, Rockville, Maryland 20850, 240–672–6175, *singhshr@mail.nih.gov.*

Name of Committee: National Cancer Institute Special Emphasis Panel; NCI SPORE (P50) Review I.

Date: May 25–26, 2021.

Time: 9:00 a.m. to 7:00 p.m.

Agenda: To review and evaluate grant applications.

Place: National Cancer Institute at Shady Grove, 9609 Medical Center Drive, Room 7W244, Rockville, Maryland 20850 (Telephone Conference Call).

Contact Person: John Paul Cairns, Ph.D., Scientific Review Officer, Research Programs Review Branch, Division of Extramural Activities, National Cancer Institute, NIH, 9609 Medical Center Drive, Room 7W244, Rockville, Maryland 20850, 240–276–5415, *paul.cairns@nih.gov.*

Name of Committee: National Cancer Institute Special Emphasis Panel; NCI SPORE (P50) Review II.

Date: May 26–27, 2021.

Time: 9:00 a.m. to 6:00 p.m.
Agenda: To review and evaluate grant applications.
Place: National Cancer Institute at Shady Grove, 9609 Medical Center Drive, Room 7W248, Rockville, Maryland 20850 (Telephone Conference Call).
Contact Person: Anita T. Tandle, Ph.D., Scientific Review Officer, Research Programs Review Branch, Division of Extramural Activities, National Cancer Institute, NIH, 9609 Medical Center Drive, Room 7W248, Rockville, Maryland 20850, 240–276–5085, *tandlea@mail.nih.gov.*

Name of Committee: National Cancer Institute Special Emphasis Panel; NCI Program Project I (P01).
Date: June 8–9, 2021.
Time: 10:00 a.m. to 6:00 p.m.
Agenda: To review and evaluate grant applications.
Place: National Cancer Institute at Shady Grove, 9609 Medical Center Drive, Room 7W120, Rockville, Maryland 20850 (Telephone Conference Call).
Contact Person: Klaus B. Piontek, Ph.D., Scientific Review Officer, Research Programs Review Branch, Division of Extramural Activities, National Cancer Institute, NIH, 9609 Medical Center Drive, Room 7W120, Rockville, Maryland 20850, 240–276–5415, *klaus.piontek@nih.gov.*

Name of Committee: National Cancer Institute Special Emphasis Panel; NCI Program Project II (P01).
Date: June 16–17, 2021.
Time: 9:00 a.m. to 6:00 p.m.
Agenda: To review and evaluate grant applications.
Place: National Cancer Institute at Shady Grove, 9609 Medical Center Drive, Room 7W648, Rockville, Maryland 20850 (Telephone Conference Call).
Contact Person: Michael E. Lindquist, Ph.D., Scientific Review Officer, Research Programs Review Branch, Division of Extramural Activities, National Cancer Institute, NIH, 9609 Medical Center Drive, 7W648, Rockville, Maryland 20850, *mike.lindquist@nih.gov.*

Name of Committee: National Cancer Institute Special Emphasis Panel; NCI Program Project III (P01).
Date: June 17–18, 2021.
Time: 10:00 a.m. to 3:00 p.m.
Agenda: To review and evaluate grant applications.
Place: National Cancer Institute at Shady Grove, 9609 Medical Center Drive, Room 7W618, Rockville, Maryland 20850 (Telephone Conference Call).
Contact Person: Mukesh Kumar, Ph.D., Scientific Review Officer, Research Program Review Branch, Division of Extramural Activities, National Cancer Institute, NIH, 9609 Medical Center Drive, Room 7W618, Rockville, Maryland 20850, 240–276–6611, *mukesh.kumar3@nih.gov.*

Name of Committee: National Cancer Institute Special Emphasis Panel; Technologies for Cancer Research.
Date: June 18, 2021.
Time: 11:00 a.m. to 5:00 p.m.
Agenda: To review and evaluate grant applications.
Place: National Cancer Institute at Shady Grove, 9609 Medical Center Drive, Room 7W608, Rockville, Maryland 20850 (Telephone Conference Call).
Contact Person: Nadeem Khan, Ph.D., Scientific Review Officer, Research Technology and Contract Review Branch, Division of Extramural Activities, National Cancer Institute, NIH, 9609 Medical Center Drive, Room 7W608, Rockville, Maryland 20850, 240–276–5856, *nadeem.khan@nih.gov.*

Name of Committee: National Cancer Institute Special Emphasis Panel; NCI Program Project IV (P01).
Date: June 24–25, 2021.
Time: 10:00 a.m. to 6:00 p.m.
Agenda: To review and evaluate grant applications.
Place: National Cancer Institute at Shady Grove, 9609 Medical Center Drive, Room 7W120, Rockville, Maryland 20850 (Telephone Conference Call).
Contact Person: Majed M. Hamawy, Ph.D., Scientific Review Officer, Research Programs Review Branch, Division of Extramural Activities, National Cancer Institute, NIH, 9609 Medical Center Drive, Room 7W120, Rockville, Maryland 20850, 240–276–6457, *mh101v@nih.gov.*

(Catalogue of Federal Domestic Assistance Program Nos. 93.392, Cancer Construction; 93.393, Cancer Cause and Prevention Research; 93.394, Cancer Detection and Diagnosis Research; 93.395, Cancer Treatment Research; 93.396, Cancer Biology Research; 93.397, Cancer Centers Support; 93.398, Cancer Research Manpower; 93.399, Cancer Control, National Institutes of Health, HHS)

Dated: March 22, 2021.

Melanie J. Pantoja,

Program Analyst, Office of Federal Advisory Committee Policy.

[FR Doc. 2021–06228 Filed 3–25–21; 8:45 am]

BILLING CODE 4140–01–P

DEPARTMENT OF HEALTH AND HUMAN SERVICES

National Institutes of Health

National Institute of Allergy and Infectious Diseases; Notice of Closed Meeting

Pursuant to section 10(d) of the Federal Advisory Committee Act, as amended, notice is hereby given of the following meeting.

The meeting will be closed to the public in accordance with the provisions set forth in sections 552b(c)(4) and 552b(c)(6), Title 5 U.S.C., as amended. The grant applications and the discussions could disclose confidential trade secrets or commercial property such as patentable material, and personal information concerning individuals associated with the grant applications, the disclosure of which would constitute a clearly unwarranted invasion of personal privacy.

Name of Committee: National Institute of Allergy and Infectious Diseases Special Emphasis Panel Emergency Awards: Notice of Special Interest (NOSI) on Pan-Coronavirus Vaccine Development Program Projects.
Date: April 22, 2021.
Time: 10:00 a.m. to 5:00 p.m.
Agenda: To review and evaluate grant applications.
Place: National Institute of Allergy and Infectious Diseases, National Institutes of Health, 5601 Fishers Lane, Room 3G42B, Rockville, MD 20892 (Virtual Meeting).
Contact Person: Louis A. Rosenthal, Ph.D., Scientific Review Officer, Scientific Review Program, Division of Extramural Activities, National Institute of Allergy and Infectious Diseases, National Institutes of Health, 5601 Fishers Lane, Room 3G42B, Rockville, MD 20852, (240) 669–5070, *rosenthalla@niaid.nih.gov.*

(Catalogue of Federal Domestic Assistance Program Nos. 93.855, Allergy, Immunology, and Transplantation Research; 93.856, Microbiology and Infectious Diseases Research, National Institutes of Health, HHS)

Dated: March 22, 2021.

Tyeshia M. Roberson,

Program Analyst, Office of Federal Advisory Committee Policy.

[FR Doc. 2021–06281 Filed 3–25–21; 8:45 am]

BILLING CODE 4140–01–P

DEPARTMENT OF HEALTH AND HUMAN SERVICES

National Institutes of Health

National Institute on Aging; Notice of Closed Meeting

Pursuant to section 10(d) of the Federal Advisory Committee Act, as amended, notice is hereby given of the following meeting.

The meeting will be closed to the public in accordance with the provisions set forth in sections 552b(c)(4) and 552b(c)(6), Title 5 U.S.C., as amended. The grant applications and the discussions could disclose confidential trade secrets or commercial property such as patentable material, and personal information concerning individuals associated with the grant applications, the disclosure of which would constitute a clearly unwarranted invasion of personal privacy.

Name of Committee: National Institute on Aging Special Emphasis Panel NIAC1.
Date: March 25, 2021.
Time: 10:00 a.m. to 11:00 a.m.
Agenda: To review and evaluate grant applications.
Place: National Institutes of Health, Gateway Building, 6707 Democracy Boulevard, Bethesda, MD 20892 (Virtual Meeting).

Contact Person: Isis S. Mikhail, MD, MPH, DRPH, Scientific Review Officer, Scientific Review Branch, National Institute on Aging, National Institutes of Health, 7201 Wisconsin Avenue, Gateway Building, Suite 2W200, Bethesda, MD 20892, (301) 402–7704, *MikhailI@mail.nih.gov.*

This notice is being published less than 15 days prior to the meeting due to the timing limitations imposed by the review and funding cycle.

(Catalogue of Federal Domestic Assistance Program Nos. 93.866, Aging Research, National Institutes of Health, HHS)

Dated: March 22, 2021.

Miguelina Perez,

Program Analyst, Office of Federal Advisory Committee Policy.

[FR Doc. 2021–06227 Filed 3–25–21; 8:45 am]

BILLING CODE 4140–01–P

DEPARTMENT OF HEALTH AND HUMAN SERVICES

National Institutes of Health

National Institute of Neurological Disorders and Stroke; Notice of Closed Meeting

Pursuant to section 10(d) of the Federal Advisory Committee Act, as amended, notice is hereby given of the following meeting.

The meeting will be closed to the public in accordance with the provisions set forth in sections 552b(c)(4) and 552b(c)(6), Title 5 U.S.C., as amended. The grant applications and the discussions could disclose confidential trade secrets or commercial property such as patentable material, and personal information concerning individuals associated with the grant applications, the disclosure of which would constitute a clearly unwarranted invasion of personal privacy.

Name of Committee: National Institute of Neurological Disorders and Stroke Special Emphasis Panel; Exploratory Clinical Trials and Comparative Effectiveness Studies.

Date: April 12, 2021.

Time: 11:30 a.m. to 4:30 p.m.

Agenda: To review and evaluate grant applications.

Place: National Institutes of Health, Neuroscience Center, 6001 Executive Boulevard, Rockville, MD 20852 (Virtual Meeting).

Contact Person: Shanta Rajaram, Ph.D., Scientific Review Officer, Scientific Review Branch, Division of Extramural Activities, NINDS/NIH, NSC, 6001 Executive Blvd., Suite 3208, MSC 9529, Rockville, MD 20852, (301) 435–6033, *rajarams@mail.nih.gov.*

This notice is being published less than 15 days prior to the meeting due to the timing limitations imposed by the review and funding cycle.

(Catalogue of Federal Domestic Assistance Program Nos. 93.853, Clinical Research Related to Neurological Disorders; 93.854, Biological Basis Research in the Neurosciences, National Institutes of Health, HHS)

Dated: March 22, 2021.

Tyeshia M. Roberson,

Program Analyst, Office of Federal Advisory Committee Policy.

[FR Doc. 2021–06283 Filed 3–25–21; 8:45 am]

BILLING CODE 4140–01–P

DEPARTMENT OF HEALTH AND HUMAN SERVICES

Substance Abuse and Mental Health Services Administration

Advisory Committee for Women's Services; Notice of Meeting Cancellation

The Substance Abuse and Mental Health Services Administration published a notice in the **Federal Register** concerning a meeting of the Advisory Committee for Women's Services. The meeting scheduled for Wednesday, March 31, 2021 at 1 p.m. is cancelled. The notice is in the **Federal Register** of Wednesday, March 10, 2021, in FR Doc. 2021–04935, on page 13725.

For further information, contact Valerie Kolick or Carlos Castillo below.

Contacts:

Valerie Kolick, Designated Federal Officer, SAMHSA's Advisory Committee for Women's Services, 5600 Fishers Lane, Rockville, MD 20857, Telephone: (240) 276–1738, Email: *Valerie.kolick@samhsa.hhs.gov*

Carlos Castillo, SAMHSA's Committee Management Officer, 5600 Fishers Lane, Rockville, MD 20857, Telephone: (240) 276–2787, Email: *Carlos.Castillo@samhsa.hhss.gov*

Dated: March 22, 2021.

Carlos Castillo,

Committee Management Officer, Substance Abuse and Mental Health, Services Administration.

[FR Doc. 2021–06256 Filed 3–25–21; 8:45 am]

BILLING CODE 4162–20–P

DEPARTMENT OF HOMELAND SECURITY

Coast Guard

[Docket No. USCG–2021–0185]

Information Collection Request to Office of Management and Budget; OMB Control Number: 1625–0120

AGENCY: Coast Guard, DHS.

ACTION: Sixty-day notice requesting comments.

SUMMARY: In compliance with the Paperwork Reduction Act of 1995, the U.S. Coast Guard intends to submit an Information Collection Request (ICR) to the Office of Management and Budget (OMB), Office of Information and Regulatory Affairs (OIRA), requesting an extension of its approval for the following collection of information: 1625–0120, U.S. Coast Guard Exchange Non-Appropriated Fund Employment Application; without change. Our ICR describes the information we seek to collect from the public. Before submitting this ICR to OIRA, the Coast Guard is inviting comments as described below.

DATES: Comments must reach the Coast Guard on or before May 25, 2021.

ADDRESSES: You may submit comments identified by Coast Guard docket number [USCG–2021–0185] to the Coast Guard using the Federal eRulemaking Portal at *https://www.regulations.gov.* See the ''Public participation and request for comments'' portion of the **SUPPLEMENTARY INFORMATION** section for further instructions on submitting comments.

A copy of the ICR is available through the docket on the internet at *https://www.regulations.gov.* Additionally, copies are available from: Commandant (CG–6P), Attn: Paperwork Reduction Act Manager, U.S. Coast Guard, 2703 Martin Luther King Jr. Ave. SE, Stop 7710, Washington, DC 20593–7710.

FOR FURTHER INFORMATION CONTACT: A.L. Craig, Office of Privacy Management, telephone 202–475–3528, or fax 202–372–8405, for questions on these documents.

SUPPLEMENTARY INFORMATION:

Public Participation and Request for Comments

This notice relies on the authority of the Paperwork Reduction Act of 1995; 44 U.S.C. chapter 35, as amended. An ICR is an application to OIRA seeking the approval, extension, or renewal of a Coast Guard collection of information (Collection). The ICR contains information describing the Collection's purpose, the Collection's likely burden on the affected public, an explanation of the necessity of the Collection, and other important information describing the Collection. There is one ICR for each Collection.

The Coast Guard invites comments on whether this ICR should be granted based on the Collection being necessary for the proper performance of Departmental functions. In particular, the Coast Guard would appreciate comments addressing: (1) The practical utility of the Collection; (2) the accuracy

of the estimated burden of the Collection; (3) ways to enhance the quality, utility, and clarity of information subject to the Collection; and (4) ways to minimize the burden of the Collection on respondents, including the use of automated collection techniques or other forms of information technology.

In response to your comments, we may revise this ICR or decide not to seek an extension of approval for the Collection. We will consider all comments and material received during the comment period.

We encourage you to respond to this request by submitting comments and related materials. Comments must contain the OMB Control Number of the ICR and the docket number of this request, [USCG–2021–0185], and must be received by May 25, 2021.

Submitting Comments

We encourage you to submit comments through the Federal eRulemaking Portal at *https://www.regulations.gov.* If your material cannot be submitted using *https://www.regulations.gov,* contact the person in the **FOR FURTHER INFORMATION CONTACT** section of this document for alternate instructions. Documents mentioned in this notice, and all public comments, are in our online docket at *https://www.regulations.gov* and can be viewed by following that website's instructions. Additionally, if you go to the online docket and sign up for email alerts, you will be notified when comments are posted.

We accept anonymous comments. All comments received will be posted without change to *https://www.regulations.gov* and will include any personal information you have provided. For more about privacy and submissions in response to this document, see DHS's eRulemaking System of Records notice (85 FR 14226, March 11, 2020).

Information Collection Request

Title: U.S. Coast Guard Exchange Non-Appropriated Fund Employment Application.

OMB Control Number: 1625–0120.

Summary: The USCG Non-Appropriated Employment Application form will be used to collect applicant qualification information associated with vacancy announcements. The form will allow individuals without resumes, computers and/or those with limited digital literacy equal access to apply for employment opportunities with the Coast Guard Non-appropriated fund (NAF) workforce and will fill the gap created by the cancellation of the Optional Application for Federal Employment, Form OF–612, OMB No. 3206–0219.

Need: The Optional Application for Federal Employment, Form OF–612, was cancelled and the information is now collected in USA Jobs. The NAF personnel system does not utilize USA Jobs because of the high cost and high turnover rate and thus relied heavily on form OF–612 for applicants.

Forms:

- CG–1227B, Non-Appropriated Fund Employment Application.

Respondents: Public applying for positions in the USCG Non-appropriated fund workforce.

Frequency: Per vacancy announcement.

Hour Burden Estimate: The estimated burden has increased from 3,837 to 4,333 hours a year, due to a change (*i.e.,* increase) in the estimated annual number of respondents.

Authority: The Paperwork Reduction Act of 1995; 44 U.S.C. chapter 35, as amended.

Dated: March 23, 2021.

Kathleen Claffie,

Chief, Office of Privacy Management, U.S. Coast Guard.

[FR Doc. 2021–06316 Filed 3–25–21; 8:45 am]

BILLING CODE 9110–04–P

DEPARTMENT OF THE INTERIOR

Fish and Wildlife Service

[FWS–R4–ES–2021–N016; FXES11130100000C4–190–FF02ENEH00]

Endangered and Threatened Wildlife and Plants; Four Draft Recovery Plans

AGENCY: Fish and Wildlife Service, Interior.

ACTION: Notice of availability; opening of public comment period.

SUMMARY: We, the U.S. Fish and Wildlife Service, announce the availability for public review and comment of four draft recovery plans. The endangered or threatened species are in Alabama, Florida, Georgia, Kentucky, South Carolina, Tennessee, and Virginia. The draft recovery plans include specific recovery objectives and criteria based on the species status assessment. We request review and comment on these draft recovery plans from local, State, and Federal agencies, nongovernmental organizations, Tribes, and the public.

DATES: We must receive comments on the draft recovery plans on or before April 26, 2021.

ADDRESSES:

Reviewing documents: If you wish to review the recovery plans, you may obtain copies from the website addresses in the table in **SUPPLEMENTARY INFORMATION**. You may also request copies of the draft recovery plans by contacting the individuals listed in the table.

Submitting comments: If you wish to comment, see the table in **SUPPLEMENTARY INFORMATION** and submit your comments by the following method:

1. *Email:* You may send comments by email to the identified contact person's email address in the table, for each species. Please include ''Draft Recovery Plan Revision Comments'' in the subject line.

FOR FURTHER INFORMATION CONTACT: For general information, contact Aaron Valenta, at 404–679–4144 or *Aaron_Valenta@fws.gov.* For information on a particular species, contact the appropriate person listed in the table for that species in **SUPPLEMENTARY INFORMATION**. Individuals who are hearing impaired may call the Federal Relay Service at 800–877–8339 for TTY assistance.

SUPPLEMENTARY INFORMATION:

Background

The purpose of a recovery plan is to provide a feasible and effective roadmap for a species' recovery, with the goal of improving its status and managing its threats to the point at which protections under the Endangered Species Act (ESA; 16 U.S.C. 1531, *et seq.*) are no longer needed. Section 4(f)(1) of the ESA requires development of recovery plans for listed species unless a plan would not promote the conservation of a particular species. Recovery plans should be designed so that all stakeholders and the public understand the rationale behind the recovery program, whether they were involved in writing the plan or not, and recognize their role in its implementation. We are requesting submission of any information that enhances the necessary understanding of the (1) species' biology and threats, (2) recovery needs and related implementation issues or concerns, and (3) information on ongoing beneficial management efforts to ensure that we have assembled, considered, and incorporated the most current and highest quality information, into the draft recovery plans for these four species.

Recovery plans provide important guidance to the U.S. Fish and Wildlife Service (Service), States, other partners, and the general public on methods of minimizing threats to listed species and

objectives against which to measure the progress towards recovery; they are guidance and not regulatory documents. A recovery plan identifies, organizes, and prioritizes recovery actions and is an important guide that ensures sound scientific decision-making throughout the recovery process, which can take decades. Writing robust recovery plans ensures that threatened species and endangered species benefit from timely partner-coordinated implementation, based on the most current and highest quality information.

We must submit draft recovery plans for public notice and comment under section 4(f)(4) of the ESA, including (1) a **Federal Register** notice of availability to give opportunity for public review and comment and (2) consideration of all information presented during the public comment period, prior to their approval by the Regional Director. When finalized, recovery plans will be made publicly available on the internet through our Environmental Conservation Online System (ECOS; *https://ecos.fws.gov*).

What plans are being made available for public review and comment?

This notice announces our draft recovery plans for the species listed in the table below.

	Scientific name	Listing status [1]	Current range	Recovery plan name	Contact person, phone, email	Contact person's U.S. mail address
Reticulated Flatwoods Salamander.	*Ambystoma bishopi*	E	AL, GA, FL	U.S. Fish and Wildlife Service Draft Recovery Plan for the Reticulated Flatwoods Salamander (*Ambystoma bishopi*).	Lourdes Mena, 904–731–3134, *Lourdes_ Mena@fws.gov*.	U.S. Fish and Wildlife Service, South Florida Ecological Services Office, 1339 20th Street, Vero Beach, FL 32960.
Frosted Flatwoods Salamander.	*Ambystoma cingulatum*	T	SC, GA, FL	U.S. Fish and Wildlife Service Draft Recovery Plan for the Frosted Flatwoods Salamander (*Ambystoma cingulatum*).	Lourdes Mena, 904–731–3134, *Lourdes_ Mena@fws.gov*.	U.S. Fish and Wildlife Service, South Florida Ecological Services Office, 1339 20th Street, Vero Beach, FL 32960.
Fluted Kidneyshell	*Ptychobranchus subtentum* (=*sub tentus*).	E	AL, KY, TN, VA.	U.S. Fish and Wildlife Service Draft Recovery Plan for the Fluted Kidneyshell (*Ptychobranchus subtentum* (=*subtentus*)).	Lee Andrews, 502–695–0468, x108, *Lee_ Andrews@fws.gov*.	Interior Region 1—North Atlantic-Appalachian (Kentucky), 330 West Broadway, Room 265 Frankfort, KY 40601.
Kentucky Glade Cress ...	*Leavenworthia exigua* var. *laciniata*.	T	KY	U.S. Fish and Wildlife Service Draft Recovery Plan for the Kentucky Glade Cress (*Leavenworthia exigua var. laciniata*).	Lee Andrews, 502–695–0468, x108, *Lee_ Andrews@fws.gov*.	Interior Region 1—North Atlantic-Appalachian (Kentucky), 330 West Broadway, Room 265 Frankfort, KY 40601.

[1] E = endangered; T = threatened.
[2] Denotes a partial revision (*i.e.,* amendment) to the recovery plan.
[3] Denotes a full revision of the recovery plan.

How do I ask questions or provide information?

For any species listed above, please submit your questions, comments, and materials to the appropriate contact in the table above. Individuals who are hearing impaired or speech impaired may call the Federal Relay Service at 800–877–8339 for TTY assistance.

Request for Public Comments

We request written comments on the draft recovery plans. We will consider all comments we receive by the date specified in **DATES** prior to final approval of the plans.

Public Availability of Comments

All comments received, including names and addresses, will become part of the administrative record and will be available to the public. Before including your address, phone number, email address, or other personal identifying information in your comment, you should be aware that your entire comment—including your personal identifying information—may be made publicly available at any time. While you can ask us in your comment to withhold your personal identifying information from public review, we cannot guarantee that we will be able to do so.

Authority

The authority for this action is section 4(f) of the Endangered Species Act (16 U.S.C. 1533(f)).

Leopoldo Miranda-Castro,

Regional Director.

[FR Doc. 2021–06234 Filed 3–25–21; 8:45 am]

BILLING CODE 4333–15–P

DEPARTMENT OF THE INTERIOR

Fish and Wildlife Service

[Docket No. FWS–R4–ES–2021–0026; FXES11140400000–212–FF04EF4000]

Receipt of Incidental Take Permit Application and Proposed Habitat Conservation Plan for the Sand Skink and Blue-Tailed Mole Skink; Osceola County, FL; Categorical Exclusion

AGENCY: Fish and Wildlife Service, Interior.

ACTION: Notice of availability; request for comments and information.

SUMMARY: We, the Fish and Wildlife Service (Service), announce receipt of an application from EGR East, LLC (applicant) for an incidental take permit (ITP) under the Endangered Species Act. The applicant requests the ITP to take the federally listed sand skink and blue-tailed mole skink incidental to the construction of a residential development in Osceola County, Florida. We request public comment on the application, which includes the applicant's proposed habitat conservation plan (HCP), and on the Service's preliminary determination that this HCP qualifies as ''low-effect,'' categorically excluded under the National Environmental Policy Act. To make this determination, we used our environmental action statement and low-effect screening form, both of which are also available for public review.

DATES: We must receive your written comments on or before April 26, 2021.

ADDRESSES: *Obtaining Documents:* You may obtain copies of the documents online in Docket No. FWS–R4–ES–2021–0026 at *http://www.regulations.gov.*

Submitting Comments: If you wish to submit comments on any of the documents, you may do so in writing by any of the following methods:

- *Online: http://www.regulations.gov.* Follow the instructions for submitting comments on Docket No. FWS–R4–ES–2021–0026.
- *U.S. mail:* Public Comments Processing, Attn: Docket No. FWS–R4–ES–2021–0026; U.S. Fish and Wildlife Service, MS: PRB/3W, 5275 Leesburg Pike, Falls Church, VA 22041–3803.

FOR FURTHER INFORMATION CONTACT: Alfredo Begazo, by U.S. mail (see **ADDRESSES**) or via phone at 772–469–4234. Individuals who are hearing impaired or speech impaired may call the Federal Relay Service at 800–877–8339 for TTY assistance.

SUPPLEMENTARY INFORMATION: We, the Fish and Wildlife Service, announce receipt of an application from EGR East, LLC (applicant) for an incidental take permit (ITP) under the Endangered Species Act of 1973, as amended (ESA; 16 U.S.C. 1531 *et seq.*). The applicant requests the ITP to take the federally listed sand skink (*Neoseps reynoldsi*) and blue-tailed mole skink (*Eumeces egregious lividus*) (skinks) incidental to the construction of a residential development in Osceola County, Florida. We request public comment on the application, which includes the applicant's habitat conservation plan (HCP), and on the Service's preliminary determination that this HCP qualifies as ''low-effect,'' categorically excluded under the National Environmental Policy Act (NEPA; 42 U.S.C. 4231 *et seq.*). To make this determination, we used our environmental action statement and low-effect screening form, both of which are also available for public review.

Project

The applicant requests a 10-year ITP to take skinks through the conversion of approximately 5.83 acres of occupied skink foraging and sheltering habitat incidental to the construction of a residential development on a 39-acre parcel in Sections 19 and 30, Township 25 South, Range 27 East, Osceola County, Florida. The applicant proposes to mitigate for take of the skinks by purchasing credits equivalent to 11.66 acres of skink-occupied habitat from a Service-approved conservation bank. The Service would require the applicant to purchase the credits prior to engaging in any phase of the project.

Public Availability of Comments

Before including your address, phone number, email address, or other personal identifying information in your comment, be aware that your entire comment, including your personal identifying information, may be made available to the public. While you may request that we withhold your personal identifying information, we cannot guarantee that we will be able to do so.

Our Preliminary Determination

The Service has made a preliminary determination that the applicant's project, including the construction of single-family homes, paved roads, green areas, storm water ponds, and associated infrastructure (*e.g.,* electric, water, and sewer lines) would individually and cumulatively have a minor or negligible effect on the skinks and the environment. Therefore, we have preliminarily concluded that the ITP for this project would qualify for categorical exclusion and the HCP would be low effect under our NEPA regulations at 43 CFR 46.205 and 46.210. A low-effect HCP is one that would result in (1) minor or negligible effects on federally listed, proposed, and candidate species and their habitats; (2) minor or negligible effects on other environmental values or resources; and (3) impacts that, when considered together with the impacts of other past, present, and reasonable foreseeable similarly situated projects, would not result in significant cumulative effects to environmental values or resources over time.

Next Steps

The Service will evaluate the application and the comments to determine whether to issue the requested permit. We will also conduct an intra-Service consultation pursuant to section 7 of the ESA to evaluate the effects of the proposed take. After considering the preceding findings, we will determine whether the permit issuance criteria of section 10(a)(1)(B) of the ESA have been met. If met, the Service will issue ITP number PER0002675 to EGR East, LLC for incidental take of skinks.

Authority

The Service provides this notice under section 10(c) of the ESA (16 U.S.C. 1531 *et seq.*) and its implementing regulations (50 CFR 17.32) and NEPA (42 U.S.C. 4321 *et seq.*) and its implementing regulations (40 CFR 1506.6 and 43 CFR 46.305).

Roxanna Hinzman,

Field Supervisor, South Florida Ecological Services Office.

[FR Doc. 2021–06235 Filed 3–25–21; 8:45 am]

BILLING CODE 4333–15–P

DEPARTMENT OF THE INTERIOR

Bureau of Indian Affairs

[212A2100DD/AAKC001030// A0A501010.999900; OMB Control Number 1076–0172]

Agency Information Collection Activities; Class III Tribal-State Gaming Compact Process

AGENCY: Bureau of Indian Affairs, Interior.

ACTION: Notice of information collection; request for comment.

SUMMARY: In accordance with the Paperwork Reduction Act of 1995, we, the Office of the Assistant Secretary—Indian Affairs, are proposing to renew an information collection.

DATES: Interested persons are invited to submit comments on or before May 25, 2021.

ADDRESSES: Send written comments on this information collection request (ICR) to Ms. Paula Hart, U.S. Department of the Interior, Office of Indian Gaming, 1849 C Street NW, Mail Stop 3543, Washington, DC 20240; email: *Paula.Hart@BIA.gov.* Please reference OMB Control Number 1076–0172 in the subject line of your comments.

FOR FURTHER INFORMATION CONTACT: To request additional information about this ICR, contact Ms. Paula Hart, telephone: (202) 219–4066. You may also view the ICR at *http://www.reginfo.gov/public/do/PRAMain.*

SUPPLEMENTARY INFORMATION: In accordance with the Paperwork Reduction Act of 1995, we provide the general public and other Federal agencies with an opportunity to comment on new, proposed, revised, and continuing collections of information. This helps us assess the impact of our information collection requirements and minimize the public's reporting burden. It also helps the public understand our information collection requirements and provide the requested data in the desired format.

We are soliciting comments on the proposed ICR that is described below. We are especially interested in public comment addressing the following issues: (1) Is the collection necessary to the proper functions of the BIA; (2) will this information be processed and used in a timely manner; (3) is the estimate of burden accurate; (4) how might the BIA enhance the quality, utility, and clarity of the information to be collected; and (5) how might the BIA minimize the burden of this collection on the respondents, including through the use of information technology.

Comments that you submit in response to this notice are a matter of public record. Before including your address, phone number, email address, or other personal identifying information in your comment, you should be aware that your entire comment—including your personal identifying information—may be made publicly available at any time. While you can ask us in your comment to withhold your personal identifying information from public review, we cannot guarantee that we will be able to do so.

Abstract: The Office of the Assistant Secretary—Indian Affairs is seeking renewal of the approval for the information collection conducted under

25 CFR 293, Class III Tribal-State Gaming Compact Process and the Indian Gaming Regulatory Act (IGRA), 25 U.S.C. 2710(d)(8)(A), (B) and (C), which authorizes the Secretary to approve, disapprove or ''consider approved'' (*i.e.,* deemed approved) a Tribal-state gaming compact or compact amendment and publish notice of that approval or considered approval in the **Federal Register**. The information collected includes Tribal-state compacts or compact amendments entered into by Indian Tribes and State governments. The Secretary of the Interior reviews this information and may approve, disapprove or consider the compact approved.

Title of Collection: Class III Tribal-State Gaming Compact Process.

OMB Control Number: 1076–0172.

Form Number: None.

Type of Review: Extension without change of currently approved collection.

Respondents/Affected Public: Indian Tribes and State governments.

Total Estimated Number of Annual Respondents: 40 per year.

Total Estimated Number of Annual Responses: 40 per year.

Estimated Completion Time per Response: 200 hours.

Total Estimated Number of Annual Burden Hours: 8,000 hours.

Respondent's Obligation: Required to obtain a benefit.

Frequency of Collection: One time.

Total Estimated Annual Nonhour Burden Cost: $0.

An agency may not conduct or sponsor and a person is not required to respond to a collection of information unless it displays a currently valid OMB control number.

The authority for this action is the Paperwork Reduction Act of 1995 (44 U.S.C. 3501 *et seq.*).

Elizabeth K. Appel,

Director, Office of Regulatory Affairs and Collaborative Action—Indian Affairs.

[FR Doc. 2021–06403 Filed 3–25–21; 8:45 am]

BILLING CODE 4337–15–P

DEPARTMENT OF THE INTERIOR

Bureau of Indian Affairs

[212A2100DD/AAKC001030/ A0A501010.999900 253G; OMB Control Number 1076–0114]

Agency Information Collection Activities: Submission to the Office of Management and Budget for Review and Approval; Application for Admission to Haskell Indian Nations University and to Southwestern Indian Polytechnic Institute

AGENCY: Bureau of Indian Affairs, Interior.

ACTION: Notice of information collection; request for comment.

SUMMARY: In accordance with the Paperwork Reduction Act of 1995, we, the Bureau of Indian Education (BIE) are proposing to renew an information collection with revisions.

DATES: Interested persons are invited to submit comments on or before April 26, 2021.

ADDRESSES: Send written comments on this information collection request (ICR) to the Office of Management and Budget's Desk Officer for the Department of the Interior by email at *OIRA_Submission@omb.eop.gov;* or via facsimile to (202) 395–5806. Please provide a copy of your comments to Ms. Juanita Mendoza, U.S. Department of the Interior, Bureau of Indian Education, 1849 C Street NW, Washington, DC 20240; fax: (202) 208–3312; email: *Juanita.Mendoza@bie.edu.* Please reference OMB Control Number 1076–0114 in the subject line of your comments.

FOR FURTHER INFORMATION CONTACT: To request additional information about this ICR, contact Dr. Sherry Allison, with Southwestern Indian Polytechnic Institute, by phone at (505) 346–2348 or by email at *Sherry.Allison@bie.edu* or LouEdith Hara, with Haskell Indian Nations University, by phone at (785) 749–8404 or by email at *lhara@haskell.edu.* You may also view the ICR at *http://www.reginfo.gov/public/do/PRAMain.*

SUPPLEMENTARY INFORMATION: In accordance with the Paperwork Reduction Act of 1995, we provide the general public and other Federal agencies with an opportunity to comment on new, proposed, revised, and continuing collections of information. This helps us assess the impact of our information collection requirements and minimize the public's reporting burden. It also helps the public understand our information collection requirements and provide the requested data in the desired format.

A **Federal Register** notice with a 60-day public comment period soliciting comments on this collection of information was published on November 27, 2020 (85 FR 76100). No comments were received.

We are again soliciting comments on the proposed ICR that is described below. We are especially interested in public comment addressing the following issues: (1) Is the collection necessary to the proper functions of the BIE; (2) will this information be processed and used in a timely manner; (3) is the estimate of burden accurate; (4) how might the BIE enhance the quality, utility, and clarity of the information to be collected; and (5) how might the BIE minimize the burden of this collection on the respondents, including through the use of information technology.

Comments that you submit in response to this notice are a matter of public record. Before including your address, phone number, email address, or other personal identifying information in your comment, you should be aware that your entire comment—including your personal identifying information—may be made publicly available at any time. While you can ask us in your comment to withhold your personal identifying information from public review, we cannot guarantee that we will be able to do so.

Abstract: The BIE is requesting approval for the admission forms for Haskell Indian Nations University (Haskell) and Southwest Indian Polytechnic Institute (SIPI). These admission forms are used in determining program eligibility of American Indian and Alaska Native students for educational services. These forms are utilized pursuant to the Blood Quantum Act, Public Law 99–228; the Snyder Act, Chapter 115, Public Law 67–85; and, the Indian Appropriations of the 48th Congress, Chapter 180, page 91, For Support of Schools, July 4, 1884. Submission of these eligibility application forms is mandatory in determining a student's eligibility for educational services. The information is collected on two forms: The Application for Admission to Haskell form and the Application for Admission to SIPI form. Haskell opted to not pursue approval of the Dual Enrollment as a part of this renewal.

Title of Collection: Application for Admission to Haskell Indian Nations University and to Southwestern Indian Polytechnic Institute.

OMB Control Number: 1076–0114.

Form Number: None.

Type of Review: Revision of currently approved collection.

Respondents/Affected Public: Students.

Total Estimated Number of Annual Respondents: 2,100 per year, on average.

Total Estimated Number of Annual Responses: 2,100 per year, on average.

Estimated Completion Time per Response: 15 minutes per Haskell application; 30 minutes per SIPI application.

Total Estimated Number of Annual Burden Hours: 800 hours.

Respondent's Obligation: Response is required to obtain a benefit.

Frequency of Collection: Once per year for Haskell; once for SIPI, unless a student has missed more than two consecutive trimesters.

Total Estimated Annual Nonhour Burden Cost: $11,155.

An agency may not conduct or sponsor and a person is not required to respond to a collection of information unless it displays a currently valid OMB control number.

The authority for this action is the Paperwork Reduction Act of 1995 (44 U.S.C. 3501 *et seq*).

Elizabeth K. Appel,

Director, Office of Regulatory Affairs and Collaborative Action—Indian Affairs.

[FR Doc. 2021–06275 Filed 3–25–21; 8:45 am]

BILLING CODE 4337–15–P

DEPARTMENT OF THE INTERIOR

Bureau of Indian Affairs

[212A2100DD/AAKC001030/ A0A501010.999900 253G; OMB Control Number 1076–0153]

Agency Information Collection Activities; Submission to the Office of Management and Budget for Review and Approval; Certificate of Degree of Indian or Alaska Native Blood

AGENCY: Bureau of Indian Affairs, Interior.

ACTION: Notice of information collection; request for comment.

SUMMARY: In accordance with the Paperwork Reduction Act of 1995, we, the Bureau of Indian Affairs (BIA) are proposing to renew an information collection.

DATES: Interested persons are invited to submit comments on or before April 26, 2021.

ADDRESSES: Send written comments on this information collection request (ICR) to the Office of Management and Budget's Desk Officer for the Department of the Interior by email at *OIRA_Submission@omb.eop.gov;* or via facsimile to (202) 395–5806. Please provide a copy of your comments to Ms. Laurel Iron Cloud, Chief, Division of Tribal Government Services, Office of Indian Services, Bureau of Indian Affairs, 1849 C Street NW, Mail Stop 3645 MIB, Washington, DC 20240; fax: (202) 208–5113; or by email to *laurel.ironcloud@bia.gov.* Please reference OMB Control Number 1076–0153 in the subject line of your comments.

FOR FURTHER INFORMATION CONTACT: To request additional information about this ICR, contact Ms. Laurel Iron Cloud by email at *laurel.ironcloud@bia.gov,* or by telephone at (202) 513–7641. You may also view the ICR at *http://www.reginfo.gov/public/do/PRAMain.*

SUPPLEMENTARY INFORMATION: In accordance with the Paperwork Reduction Act of 1995, we provide the general public and other Federal agencies with an opportunity to comment on new, proposed, revised, and continuing collections of information. This helps us assess the impact of our information collection requirements and minimize the public's reporting burden. It also helps the public understand our information collection requirements and provide the requested data in the desired format.

A **Federal Register** notice with a 60-day public comment period soliciting comments on this collection of information was published on September 30, 2020 (85 FR 61768). No comments were received.

We are again soliciting comments on the proposed ICR that is described below. We are especially interested in public comment addressing the following issues: (1) Is the collection necessary to the proper functions of the BIA; (2) will this information be processed and used in a timely manner; (3) is the estimate of burden accurate; (4) how might the BIA enhance the quality, utility, and clarity of the information to be collected; and (5) how might the BIA minimize the burden of this collection on the respondents, including through the use of information technology.

Comments that you submit in response to this notice are a matter of public record. Before including your address, phone number, email address, or other personal identifying information in your comment, you should be aware that your entire comment—including your personal identifying information—may be made publicly available at any time. While you can ask us in your comment to withhold your personal identifying information from public review, we cannot guarantee that we will be able to do so.

Abstract: The BIA is seeking renewal of the approval for the information collection conducted under the numerous laws authorizing BIA to administer program services to Indians, provided that the individual possesses a minimum degree of Indian or Alaska Native blood. When applying for program services authorized by these laws, an applicant must provide acceptable documentation to prove that he or she meets the minimum required degree of Indian or Alaska Native blood. Currently, the BIA certifies an individual's degree of Indian or Alaska Native blood if the individual can provide sufficient information to prove his or her identity and prove his or her descent from an Indian ancestor(s) listed on historic documents approved by the Secretary of the Interior that include blood degree information. To obtain the CDIB, the applicant must fill out an application form and provide supporting documents.

Title of Collection: Request for Certificate of Degree of Indian or Alaska Native Blood.

OMB Control Number: 1076–0153.

Form Number: N/A.

Type of Review: Extension of a currently approved collection.

Respondents/Affected Public: Individuals.

Total Estimated Number of Annual Respondents: 100,000 per year, on average.

Total Estimated Number of Annual Responses: 100,000 per year, on average.

Estimated Completion Time per Response: 1.5 hours.

Total Estimated Number of Annual Burden Hours: 150,000.

Respondent's Obligation: Required to Obtain a Benefit.

Frequency of Collection: Once.

Total Estimated Annual Nonhour Burden Cost: $4,000,000.

An agency may not conduct or sponsor and a person is not required to respond to a collection of information unless it displays a currently valid OMB control number.

The authority for this action is the Paperwork Reduction Act of 1995 (44 U.S.C. 3501 *et seq.*).

Elizabeth K. Appel,

Director, Office of Regulatory Affairs and Collaborative Action—Indian Affairs.

[FR Doc. 2021–06274 Filed 3–25–21; 8:45 am]

BILLING CODE 4337–15–P

INTERNATIONAL TRADE COMMISSION

[Investigation No. 337–TA–1257]

Certain Organic Light-Emitting Diode Displays, Components Thereof, and Products Containing Same; Institution of Investigation

AGENCY: U.S. International Trade Commission.

ACTION: Notice.

SUMMARY: Notice is hereby given that a complaint was filed with the U.S. International Trade Commission on February 19, 2021, under section 337 of the Tariff Act of 1930, as amended, on behalf of Samsung Display Co., Ltd. of Gyeonggi-do, Republic of Korea and Intellectual Keystone Technology LLC of Wilmington, Delaware. A corrected complaint and supplement was filed on March 12, 2021. The complaint, as corrected and supplemented, alleges violations of section 337 based upon the importation into the United States, the sale for importation, and the sale within the United States after importation of certain organic light-emitting diode displays, components thereof, and products containing same by reason of infringement of certain claims of U.S. Patent No. 6,845,016 (''the '016 patent''); U.S. Patent No. 7,342,177 (''the '177 patent''); and U.S. Patent No. 7,230,593 (''the '593 patent''). The complaint further alleges that an industry in the United States exists as required by the applicable Federal Statute.

The complainants request that the Commission institute an investigation and, after the investigation, issue a limited exclusion order and cease and desist orders.

ADDRESSES: The complaint, except for any confidential information contained therein, may be viewed on the Commission's electronic docket (EDIS) at *https://edis.usitc.gov.* For help accessing EDIS, please email *EDIS3Help@usitc.gov.* Hearing impaired individuals are advised that information on this matter can be obtained by contacting the Commission's TDD terminal on (202) 205–1810. Persons with mobility impairments who will need special assistance in gaining access to the Commission should contact the Office of the Secretary at (202) 205–2000. General information concerning the Commission may also be obtained by accessing its internet server at *https://www.usitc.gov.*

FOR FURTHER INFORMATION CONTACT: Katherine Hiner, Office of the Secretary, Docket Services Division, U.S. International Trade Commission, telephone (202) 205–1802.

SUPPLEMENTARY INFORMATION:

Authority: The authority for institution of this investigation is contained in section 337 of the Tariff Act of 1930, as amended, 19 U.S.C. 1337, and in section 210.10 of the Commission's Rules of Practice and Procedure, 19 CFR 210.10 (2020).

Scope of Investigation: Having considered the complaint, the U.S. International Trade Commission, on March 22, 2021, *ordered that*—

(1) Pursuant to subsection (b) of section 337 of the Tariff Act of 1930, as amended, an investigation be instituted to determine whether there is a violation of subsection (a)(1)(B) of section 337 in the importation into the United States, the sale for importation, or the sale within the United States after importation of certain products identified in paragraph (2) by reason of infringement of one or more of claims 1, 2, 4–6, 8, 12, and 13 of the '016 patent; claims 1, 3, and 4 of the '177 patent; and claims 15–17 and 19 of the '593 patent; and whether an industry in the United States exists as required by subsection (a)(2) of section 337;

(2) Pursuant to section 210.10(b)(1) of the Commission's Rules of Practice and Procedure, 19 CFR 210.10(b)(1), the plain language description of the accused products or category of accused products, which defines the scope of the investigation, is ''electroluminescent display panels that comprise organic light-emitting diode ('OLED') pixel element for presenting information to a viewer, and display monitor products, smartphone products, and televisions products that incorporate electroluminescent display panels that comprise OLED pixel elements'';

(3) For the purpose of the investigation so instituted, the following are hereby named as parties upon which this notice of investigation shall be served:

(a) The complainants are:

Samsung Display Co., Ltd., #1, Samsung-ro, Giheung-gu, Yongin-si, Gyeonggi-do, 17113, Republic of Korea

Intellectual Keystone Technology LLC, 251 Little Falls Drive, Wilmington, Delaware 19808–1674

(b) The respondents are the following entities alleged to be in violation of section 337, and are the parties upon which the complaint is to be served:

ASUSTeK Computer, Inc., 15 Li-Te Road, Beitou District, Taipei 112, Taiwan

ASUS Computer International, 48720 Kato Road, Fremont, California 94538

JOLED Inc., Metlife Building 10F, Kandanishiki-cho 3–23, Chiyoda-ku, Tokyo, Japan, 101–0054

(4) For the investigation so instituted, the Chief Administrative Law Judge, U.S. International Trade Commission, shall designate the presiding Administrative Law Judge.

The Office of Unfair Import Investigations will not be named as a party to this investigation.

Responses to the complaint and the notice of investigation must be submitted by the named respondents in accordance with section 210.13 of the Commission's Rules of Practice and Procedure, 19 CFR 210.13. Pursuant to 19 CFR 201.16(e) and 210.13(a), as amended in 85 FR 15798 (March 19, 2020), such responses will be considered by the Commission if received not later than 20 days after the date of service by the complainants of the complaint and the notice of investigation. Extensions of time for submitting responses to the complaint and the notice of investigation will not be granted unless good cause therefor is shown.

Failure of a respondent to file a timely response to each allegation in the complaint and in this notice may be deemed to constitute a waiver of the right to appear and contest the allegations of the complaint and this notice, and to authorize the administrative law judge and the Commission, without further notice to the respondent, to find the facts to be as alleged in the complaint and this notice and to enter an initial determination and a final determination containing such findings, and may result in the issuance of an exclusion order or a cease and desist order or both directed against the respondent.

By order of the Commission.

Issued: March 22, 2021.

Lisa Barton,

Secretary to the Commission.

[FR Doc. 2021–06249 Filed 3–25–21; 8:45 am]

BILLING CODE 7020–02–P

DEPARTMENT OF JUSTICE

Drug Enforcement Administration

[Docket No. DEA–795]

Bulk Manufacturer of Controlled Substances Application: Bulk Manufacturer of Marihuana: MMJ 95, LLC

AGENCY: Drug Enforcement Administration, Justice.

ACTION: Notice of application.

SUMMARY: The Drug Enforcement Administration (DEA) is providing notice of an application it has received

from an entity applying to be registered to manufacture in bulk basic class(es) of controlled substances listed in schedule I. DEA intends to evaluate this and other pending applications according to its regulations governing the program of growing marihuana for scientific and medical research under DEA registration.

DATES: Registered bulk manufacturers of the affected basic class(es), and applicants therefor, may file written comments on or objections to the issuance of the proposed registration on or before May 25, 2021.

ADDRESSES: Written comments should be sent to: Drug Enforcement Administration, Attention: DEA Federal Register Representative/DPW 8701 Morrissette Drive, Springfield, Virginia 22152. To ensure proper handling of comments, please reference Docket No—DEA–795 in all correspondence, including attachments.

SUPPLEMENTARY INFORMATION: The Controlled Substances Act (CSA) prohibits the cultivation and distribution of marihuana except by persons who are registered under the CSA to do so for lawful purposes. In accordance with the purposes specified in 21 CFR 1301.33(a), DEA is providing notice that the entity identified below has applied for registration as a bulk manufacturer of schedule I controlled substances. In response, registered bulk manufacturers of the affected basic class(es), and applicants therefor, may file written comments on or objections of the requested registration, as provided in this notice. This notice does not constitute any evaluation or determination of the merits of the application submitted.

The applicant plans to manufacture bulk active pharmaceutical ingredients (APIs) for product development and distribution to DEA-registered researchers. If the application for registration is granted, the registrant would not be authorized to conduct other activity under this registration aside from those coincident activities specifically authorized by DEA regulations. DEA will evaluate the application for registration as a bulk manufacturer for compliance with all applicable laws, treaties, and regulations and to ensure adequate safeguards against diversion are in place.

As this applicant has applied to become registered as a bulk manufacturer of marihuana, the application will be evaluated under the criteria of 21 U.S.C. 823(a). DEA will conduct this evaluation in the manner described in the rule published at 85 FR 82333 on December 18, 2020, and reflected in DEA regulations at 21 CFR part 1318.

In accordance with 21 CFR 1301.33(a), DEA is providing notice that on January 13, 2021, MMJ 95, LLC, 2685 Durango Drive, Colorado Springs, Colorado 80910, applied to be registered as a bulk manufacturer of the following basic class(es) of controlled substances:

Controlled substance	Drug code	Schedule
Marihuana Extract	7350	I
Marihuana	7360	I

William T. McDermott,

Assistant Administrator.

[FR Doc. 2021–06257 Filed 3–25–21; 8:45 am]

BILLING CODE 4410–09–P

DEPARTMENT OF JUSTICE

Notice of Filing of Proposed Settlement Agreements Regarding Natural Resource Damage Claims at the Western Port Angeles Harbor Site

On March 22, 2021 the Department of Justice lodged two proposed Consent Decrees with the United States District Court for the Western District of Washington in the lawsuit entitled *United States, on Behalf of the National Oceanic and Atmospheric Administration and the United States Department of the Interior; State of Washington Through the Department of Ecology; Lower Elwha Klallam Tribe; Port Gamble S'Klallam Tribe; and the Jamestown S'Klallam Tribe,.* v. *Nippon Paper Industries USA CO., LTD, Merrill & Ring Inc., Georgia-Pacific LLC, the Port of Port Angeles, Owens Corning, and the City of Port Angeles,* Civil Action No. 21–cv–5204.

The proposed Consent Decrees would resolve claims by Plaintiffs, who are State, Federal and Tribal Trustees, under Section 107 of the Comprehensive Environmental Response, Compensation and Liability Act of 1980, as amended (''CERCLA''), 42 U.S.C. 9607; Section 311 of the Clean Water Act (CWA), 33 U.S.C. 1321; and Section 1002 of the Oil Pollution Act of 1990 (OPA), 33 U.S.C. 2702; the Model Toxics Control Act (''MTCA''), Wash. Rev. Code § 70A.305.040(2); and Wash. Rev. Code § 90.48.142 for natural resource damages at the Western Port Angeles Harbor Site.

In the first Consent Decree with Nippon Paper Industries USA Co., Ltd., Merrill & Ring Inc., Georgia-Pacific LLC, Owens Corning, and the Port of Port Angeles Defendants are required to pay $8,500,000. In a separate Decree, the City of Port Angeles is required to pay $800,000. The monies are to be used by the Trustees to address damages at the Site and to reimburse Trustees for past assessment costs.

The publication of this notice opens a period for public comment on the Settlement Agreement. Comments should be addressed to the Assistant Attorney General, Environment and Natural Resources Division, and should refer to *United States, et al.* v. *Nippon Paper Industries USA CO., LTD, et al.* D.J. Ref. No. 90–11–3–10973. All comments must be submitted no later than thirty (30) days after the publication date of this notice. Comments may be submitted either by email or by mail:

To submit comments:	*Send them to:*
By email	*pubcomment-ees.enrd@usdoj.gov.*
By mail	Assistant Attorney General, U.S. DOJ—ENRD, P.O. Box 7611, Washington, DC 20044–7611.

During the public comment period, the Settlement Agreements may be examined and downloaded at this Justice Department website: *https://www.justice.gov/enrd/consent-decrees.* Alternatively, a paper copy of the Settlement Agreements will be provided upon written request and payment of reproduction costs. Please mail your request and payment to: Consent Decree Library, U.S. DOJ—ENRD, P.O. Box 7611, Washington, DC 20044–7611.

For a copy of the Consent Decree with the City, please enclose a check or money order for $8.75 (25 cents per page reproduction cost) payable to the United States Treasury. For a copy of the Consent Decree with Nippon Paper Industries USA CO., LTD, et al., enclose a check or money order for $11.50 (25 cents per page reproduction cost) payable to the United States Treasury. If you are requesting both agreements, a check or money order for $20.25 payable to the United States Treasury should be included.

Finally, please note that the Trustee agencies have released a Damage Assessment and Restoration Plan (DARP). The DARP is related to the Consent Decree but is a separate document, subject to a separate comment process. The Trustees will be holding a public meeting for more information. To learn about those Trustees and that process, please visit

https://darrp.noaa.gov/hazardous-waste/western-port-angeles-harbor.

Susan M. Akers,

Assistant Section Chief, Environmental Enforcement Section, Environment and Natural Resources Division.

[FR Doc. 2021–06273 Filed 3–25–21; 8:45 am]

BILLING CODE 4410–15–P

NATIONAL SCIENCE FOUNDATION

Proposal Review Panel for Physics; Notice of Meeting

In accordance with the Federal Advisory Committee Act (Pub. L. 92–463, as amended), the National Science Foundation (NSF) announces the following meeting:

Name and Committee Code: Proposal Review Panel for Physics (#1208)—ZEUS Virtual Site Visit.

Date and Time: May 17, 2021; 10:00 a.m.–6:00 p.m.; May 18, 2021; 10:00 a.m.–3:00 p.m.

Place: University of Michigan, 3003 S Street, Ann Arbor, MI 48109–1274 | Virtual.

Type of Meeting: Part-Open.

Contact Person: Vyacheslav Lukin, Program Director, Division of Physics, National Science Foundation, 2415 Eisenhower Avenue, Room 9226, Alexandria, VA 22314; Telephone: (703) 292–7382.

Purpose of Meeting: Virtual site visit to provide an evaluation of the progress of the projects at the host site for the Division of Physics at the National Science Foundation.

Agenda

May 17, 2021

10:00 a.m.–10:20 a.m. Executive Session CLOSED
10:20 a.m.–10:30 a.m. Introductions
10:30 a.m.–11:20 a.m. ZEUS Facility Overview
11:20 a.m.–11:50 a.m. ZEUS Science Justification
11:50 a.m.–12:30 p.m. ZEUS Construction Status
12:30 p.m.–1:15 p.m. Executive Session/Break CLOSED
1:15 p.m.–2:00 p.m. ZEUS Operation Model Overview
2:00 p.m.–2:15 p.m. ZEUS Management Plan
2:15 p.m.–2:45 p.m. ZEUS Science Operations
2:45 p.m.–3:15 p.m. ZEUS Maintenance & Upgrades
3:15 p.m.–3:30 p.m. Executive Session/Break CLOSED
3:30 p.m.–4:15 p.m. ZEUS User Services & Metrics
4:15 p.m.–5:00 p.m. Executive Session CLOSED
5:45 p.m.–6:00 p.m. Critical Feedback to the ZEUS Leadership & list of questions that require written answers & clarification on Day 2

May 18, 2021

10:00 a.m.–10:45 a.m. Meeting with UM Administration
10:45 a.m.–11:45 a.m. ZEUS responses to the Critical Feedback
11:45 a.m.–12:00 p.m. Final comments
12:00 p.m.–3:00 p.m. Site Visit Report CLOSED

Reason for Closing: The work being reviewed during closed portions of the virtual site visit include information of a proprietary or confidential nature, including technical information; financial data, such as salaries and personal information concerning individuals associated with the project. These matters are exempt under 5 U.S.C. 552b(c), (4) and (6) of the Government in the Sunshine Act.

Dated: March 22, 2021.

Crystal Robinson,

Committee Management Officer.

[FR Doc. 2021–06220 Filed 3–25–21; 8:45 am]

BILLING CODE 7555–01–P

NATIONAL SCIENCE FOUNDATION

Notice of Permits Issued Under the Antarctic Conservation Act of 1978

AGENCY: National Science Foundation.

ACTION: Notice of permits issued.

SUMMARY: The National Science Foundation (NSF) is required to publish notice of permits issued under the Antarctic Conservation Act of 1978. This is the required notice.

FOR FURTHER INFORMATION CONTACT: Nature McGinn, ACA Permit Officer, Office of Polar Programs, National Science Foundation, 2415 Eisenhower Avenue, Alexandria, VA 22314; 703–292–8030; email: *ACApermits@nsf.gov.*

SUPPLEMENTARY INFORMATION: On January 25, 2021, the National Science Foundation published a notice in the **Federal Register** of permit applications received. The permits were issued on March 22, 2021 to:

1. Michael Gooseff—Permit No. 2021–008
2. Daniel Costa—Permit No. 2021–009

Erika N. Davis,

Program Specialist, Office of Polar Programs.

[FR Doc. 2021–06286 Filed 3–25–21; 8:45 am]

BILLING CODE 7555–01–P

NATIONAL SCIENCE FOUNDATION

Advisory Committee for Cyberinfrastructure; Notice of Meeting

In accordance with the Federal Advisory Committee Act (Pub., L. 92–463, as amended), the National Science Foundation (NSF) announces the following meeting:

Name and Committee Code: Advisory Committee for Cyberinfrastructure (25150).

Date and Time: April 19, 2021; 11 a.m.–5 p.m.; April 20, 2021; 11 a.m.–5 p.m.

Place: National Science Foundation, 2415 Eisenhower Avenue, Alexandria, VA 22314.

This meeting will be held virtually. The final meeting agenda and instructions to register will be posted on the ACCI website: *https://www.nsf.gov/cise/oac/advisory.jsp.*

Type of Meeting: Open.

Contact Person: Amy Friedlander, CISE, Office of Advanced Cyberinfrastructure, National Science Foundation, 2415 Eisenhower Avenue, Alexandria, VA 22314; Telephone: 703–292–8970.

Minutes: May be obtained from the contact person listed above and will be posted within 90-days after the meeting end date to the ACCI website: *https://www.nsf.gov/cise/oac/advisory.jsp.*

Purpose of Meeting: To advise NSF on the impact of its policies, programs and activities in the OAC community. To provide advice to the Director/NSF on issues related to long-range planning.

Agenda: Updates on NSF wide OAC activities.

Dated: March 22, 2021.

Crystal Robinson,

Committee Management Officer.

[FR Doc. 2021–06229 Filed 3–25–21; 8:45 am]

BILLING CODE 7555–01–P

NUCLEAR REGULATORY COMMISSION

[Docket No. 70–1151; NRC–2021–0062]

Westinghouse Electric Company, LLC; Columbia Fuel Fabrication Facility; and US Ecology, Inc.; Idaho Resource Conservation and Recovery Act Subtitle C Hazardous Disposal Facility Located Near Grand View, Idaho

AGENCY: Nuclear Regulatory Commission.

ACTION: License amendment and exemption; issuance.

SUMMARY: The U.S. Nuclear Regulatory Commission (NRC) is issuing an exemption and associated license

amendment related to a request from Westinghouse Electric Company, LLC (WEC) from NRC regulations with respect to a request for alternate disposal and exemption for specified low-activity radioactive waste from the Columbia Fuel Fabrication Facility (CFFF) in Hopkins, South Carolina for waste containing byproduct material and special nuclear material (SNM) under License Number SNM–1107. Additionally, the NRC is taking the related action of approving exemptions to US Ecology, Inc. (USEI) from the applicable licensing requirements to allow USEI to receive and dispose the material from CFFF without an NRC license. The USEI disposal facility, located near Grand View, Idaho, is a Subtitle C Resource Conservation and Recovery Act (RCRA) hazardous waste disposal facility permitted by the State of Idaho to receive low-level radioactive waste and is not licensed by the NRC. Approval of the alternate disposal request from WEC, the exemptions and license amendment requested by WEC and associated exemptions for USEI would allow WEC to transfer the specific waste from CFFF for disposal at USEI.

DATES: This exemption is effective on March 12, 2021.

ADDRESSES: Please refer to Docket ID NRC–2021–0062 when contacting the NRC about the availability of information regarding this document. You may obtain publicly available information related to this document using any of the following methods:

- *Federal Rulemaking website:* Go to *https://www.regulations.gov* and search for Docket ID NRC–2021–0062. Address questions about Docket IDs in *Regulations.gov* to Stacy Schumann; telephone: 301–415–0624; email: *Stacy.Schumann@nrc.gov.* For technical questions, contact the individual listed in the **FOR FURTHER INFORMATION CONTACT** section of this document.
- *NRC's Agencywide Documents Access and Management System (ADAMS):* You may obtain publicly available documents online in the ADAMS Public Documents collection at *https://www.nrc.gov/reading-rm/adams.html.* To begin the search, select ''Begin Web-based ADAMS Search.'' For problems with ADAMS, please contact the NRC's Public Document Room (PDR) reference staff at 1–800–397–4209, 301–415–4737, or by email to *pdr.resource@nrc.gov.* The Request for Alternate Disposal Approval and Exemption for Specific Columbia Fuel Fabrication Facility Waste (License No. SNM–1197, Docket No. 70–1151) dated February 8, 2021 is available in ADAMS under Accession No. ML21039A719. The staff's Safety Evaluation Report dated March 3, 2021 is available in ADAMS under Package Accession No. ML21053A335.
- *Attention:* The PDR, where you may examine and order copies of public documents, is currently closed. You may submit your request to the PDR via email at *pdr.resource@nrc.gov* or call 1–800–397–4209 or 301–415–4737, between 8:00 a.m. and 4:00 p.m. (EST), Monday through Friday, except Federal holidays.

FOR FURTHER INFORMATION CONTACT: David Tiktinsky, Office of Nuclear Material Safety and Safeguards, U.S. Nuclear Regulatory Commission, Washington, DC 20555–0001; telephone: 301–415–8740, email: *David.Tiktinsky@nrc.gov.*

SUPPLEMENTARY INFORMATION:

I. Background

Westinghouse Electric Company, LLC (WEC) is the holder of a Special Nuclear Materials (SNM) License SNM–1107 under Part 70 of title 10 of the *Code of Federal Regulations* (10 CFR), which authorizes the fabrication of nuclear fuel at the Columbia Fuel Fabrication Facility (CFFF). The US Ecology, Inc. (USEI) disposal facility near Grand View, Idaho is a Subtitle C Resource Conservation and Recovery Act (RCRA) hazardous waste disposal facility permitted by the State of Idaho to receive radioactive waste that is not licensed or exempted from licensing by the NRC.

II. Request/Action

The proposed action would approve the alternate disposal request and provide exemptions to 10 CFR 70.3 and 10 CFR 30.3, and an associated WEC license amendment, allowing WEC to transfer and USEI to receive and dispose specific wastes.

Westinghouse had previously requested and received a corresponding exemption and license amendment, dated December 9, 2020 (ADAMS Accession No. ML20302A084) to transfer approximately 1428 m^3 (50,400 ft^3) of solid contaminated Calcium Fluoride (CaF_2) sludge to the USEI RCRA Subtitle C hazardous waste disposal facility near Grand View, Idaho for disposal. This material was dredged from the Calcium Fluoride Lagoons and subsequently placed in a storage pile. USEI was granted a corresponding exemption to receive and dispose of this material on December 9, 2020.

After Westinghouse received the December 9, 2020 exemption, it discovered that the actual volume of CaF_2 was less than the 1428 m^3 (50,400 ft^3) previously assumed. The actual volume was 694 m^3 (24,500 ft^3). In its February 8, 2021 letter, Westinghouse has requested an exemption and license amendment to dispose of 733 m^3 (25,900 ft^3) of similar CaF_2 from the ''Operations'' pile. The total amount of CaF_2 material (from the previous approval the additional material considered here) would not exceed the previously approved volume of 1428 m^3 (50,400 ft^3). In addition, the CaF_2 from the ''Operations'' pile is similar to the previously approved material, and the total activity and other parameters for the disposal at USEI will not differ from the initial approval. The CaF_2 sludge was generated as a waste from uranium recovery waste treatment process and is contaminated with SNM (low enriched uranium {<5 wt. % U–235}) as well.

The previously exempted sludge, soil, and debris associated with the closure of the East Lagoon will be shipped with the CaF_2 sludge to USEI using a combination of trucks and railcars.

III. Discussion

Pursuant to 10 CFR 70.17 and 10 CFR 30.11, the Commission may, upon application of any interested person or upon its own initiative, grant such exemptions from the requirements of 10 CFR part 70 and Part 30 respectively, as it determines are authorized by law and will not endanger life or property or the common defense and security and are otherwise in the public interest.

The Exemption Is Authorized by Law

The proposal provides that the material previously described, would be transported in compliance with U.S. Department of Transportation regulations to USEI in Idaho, which is a Subtitle C, RCRA hazardous waste disposal facility permitted by the State of Idaho. As such, the material will be removed per State and local regulations, will be shipped per existing Federal regulations to a location approved by the State of Idaho to receive the material, and such disposal is not otherwise contrary to NRC requirements, and is therefore authorized by law.

The Exemption Will Not Endanger Life, Property and Is Consistent With The Common Defense and Security

NRC staff reviewed the information provided by WEC to support their 10 CFR 20.2002 alternate disposal request and for the specific exemptions from 10 CFR 30.3 and 10 CFR 70.3 and associated license amendment in order to dispose of CaF_2 sludge from the ''Operations pile'' as aggregated waste at

USEI. As documented in the Safety Evaluation Report, the NRC staff concludes that, consistent with 10 CFR 20.2002, WEC provided an adequate description of the materials and the proposed manner and conditions of waste disposal. The NRC staff also concluded that the use of the site-specific dose assessment methodology to evaluate the projected doses associated with the transportation and disposal of the waste streams at USEI are acceptable. The NRC staff reviewed the input parameters included in this modeling and found that they are appropriate for the scenarios considered. The NRC staff also evaluated the potential doses associated with transportation, waste handling, and disposal and found that the projected doses have been appropriately estimated and are demonstrated to meet the NRC's alternate disposal standard of contributing a dose of not more than ''a few millirem per year'' to any member of the public and are as low as is reasonably achievable. The NRC staff also concluded that the projected doses from the post-closure and intruder scenarios at USEI are also within ''a few millirem per year'' over a period of 1,000 years. Lastly, because of the presence of SNM, the NRC evaluated potential criticality in its SER, and found no concerns. This subsequent disposal request remains bounded by the parameters of the previous request and approval. Therefore, the NRC concludes that issuance of the exemption is will not endanger life, property, and is consistent with the common defense and security.

The Exemption Is in the Public Interest

Issuance of the exemption to WEC and USEI is in the public interest because it would provide for the efficient and safe disposal for the subject waste material, would facilitate the decommissioning of the East Lagoon at the CFFF site, and would conserve low-level radioactive waste disposal capacity at licensed low-level radioactive disposal sites, while ensuring that the material being considered is disposed of safely in a regulated facility. Therefore, based upon the evaluation above, an exemption is appropriate pursuant to 10 CFR 30.11 and 10 CFR 70.17.

IV. Environmental Considerations

As required by 10 CFR 51.21, the NRC performed an environmental assessment (EA) that analyzes the environmental impacts of the proposed exemption in accordance with the National Environmental Policy Act of 1969 and NRC implementing regulations in 10 CFR part 51. Based on that EA, the NRC staff has determined not to prepare an environmental impact statement for the proposed exemption and has issued a finding of no significant impact (FONSI). The EA and FONSI were published in the **Federal Register** on March 11, 2021 (86 FR 13915).

V. Conclusions

Accordingly, the Commission has determined that, pursuant to 10 CFR 70.17 and 10 CFR 30.11, the exemptions for WEC and USEI and associated WEC license amendment are authorized by law, will not present an undue risk to the public health and safety, is consistent with the common defense and security, and is in the public interest. Therefore, the Commission hereby grants WEC and USEI exemptions from 10 CFR 70.3 and 10 CFR 30.3 to allow WEC to transfer the specifically identified byproduct material and SNM waste described above from the WEC CFFF for disposal at the USEI disposal facility located near Grand View, Idaho, and issues WEC a conforming license amendment.

Dated: March 23, 2021.

For the Nuclear Regulatory Commission.

Jacob I. Zimmerman,

Chief, Fuel Facility Licensing Branch, Division of Fuel Management, Office of Nuclear Material Safety and Safeguards.

[FR Doc. 2021–06301 Filed 3–25–21; 8:45 am]

BILLING CODE 7590–01–P

NUCLEAR REGULATORY COMMISSION

[Docket No. 50–289; NRC–2021–0079]

Exelon Generation Company, LLC; Three Mile Island Nuclear Station, Unit 1

AGENCY: Nuclear Regulatory Commission.

ACTION: Exemption; issuance.

SUMMARY: The U.S. Nuclear Regulatory Commission (NRC) has issued an exemption in response to a request from the licensee that would permit Exelon Generation Company, LLC to reduce the minimum coverage limit for onsite property damage insurance from $1.06 billion to $50 million for Three Mile Island Nuclear Station, Unit 1.

DATES: The exemption was issued on March 22, 2021.

ADDRESSES: Please refer to Docket ID NRC–2021–0079 when contacting the NRC about the availability of information regarding this document. You may obtain publicly available information related to this document using any of the following methods:

- *Federal Rulemaking website:* Go to *https://www.regulations.gov* and search for Docket ID NRC–2021–0079. Address questions about Docket IDs in *Regulations.gov* to Stacy Schumann; telephone: 301–415–0624; email: *Stacy.Schumann@nrc.gov.* For technical questions, contact the individual listed in the **FOR FURTHER INFORMATION CONTACT** section of this document.
- *NRC's Agencywide Documents Access and Management System (ADAMS):* You may obtain publicly available documents online in the ADAMS Public Documents collection at *https://www.nrc.gov/reading-rm/adams.html.* To begin the search, select ''Begin Web-based ADAMS Search.'' For problems with ADAMS, please contact the NRC's Public Document Room (PDR) reference staff at 1–800–397–4209, 301–415–4737, or by email to *pdr.resource@nrc.gov.* The ADAMS accession number for each document referenced (if it is available in ADAMS) is provided the first time that it is mentioned in this document.
- *Attention:* The PDR, where you may examine and order copies of public documents, is currently closed. You may submit your request to the PDR via email at *pdr.resource@nrc.gov* or call 1–800–397–4209 or 301–415–4737, between 8:00 a.m. and 4:00 p.m. (EST), Monday through Friday, except Federal holidays.

FOR FURTHER INFORMATION CONTACT: Theodore Smith, Office of Nuclear Material Safety and Safeguards, U.S. Nuclear Regulatory Commission, Washington, DC 20555–0001; telephone: 301–415–6721, email: *Theodore.Smith@nrc.gov.*

SUPPLEMENTARY INFORMATION: The text of the exemption is attached.

Dated: March 23, 2021.

For the Nuclear Regulatory Commission.

Bruce A. Watson,

Chief, Reactor Decommissioning Branch, Division of Decommissioning, Uranium Recovery and Waste Programs, Office of Nuclear Material Safety and Safeguards.

Attachment—Exemption

NUCLEAR REGULATORY COMMISSION

Docket No. 50–289

Exelon Generation Company, LLC

Three Mile Island Nuclear Station, Unit 1

Exemption

I. Background

By letter dated June 20, 2017 (Agencywide Documents Access and

Management System (ADAMS) Accession No. ML17171A151), Exelon Generation Company, LLC (Exelon, the licensee) certified to the U.S. Nuclear Regulatory Commission (NRC, the Commission) that it planned to permanently cease power operations at Three Mile Island Nuclear Station, Unit 1 (TMI–1) on or about September 30, 2019. On September 20, 2019, Exelon permanently ceased power operations at TMI–1. By letter dated September 26, 2019 (ADAMS Accession No. ML19269E480), Exelon certified to the NRC that the fuel was permanenetly removed from the TMI–1 reactor vessel and placed in the spent fuel pool (SFP) as of September 26, 2019. Accordingly, pursuant to Title 10 of the *Code of Federal Regulations* (10 CFR) section 50.82(a)(2), the TMI–1 renewed facility operating license no longer authorizes operation of the reactor or emplacement or retention of fuel in the reactor vessel. The facility is still authorized to possess and store irradiated (*i.e.,* spent) nuclear fuel. Spent fuel is currently stored onsite at the TMI–1 facility in the SFP.

II. Request/Action

By letter dated November 25, 2019 (ADAMS Accession No. ML19330D862), Exelon requested an exemption from 10 CFR 50.54(w)(1) concerning onsite liability insurance. The exemption from 10 CFR 50.54(w)(1) would permit the licensee to reduce the required level of onsite property damage insurance from $1.06 billion to $50 million for TMI–1.

The regulation at 10 CFR 50.54(w)(1) requires each licensee to have and maintain onsite property damage insurance to stabilize and decontaminate the reactor and reactor site in the event of an accident. The onsite insurance coverage must be either $1.06 billion or whatever amount of insurance is generally available from private sources (whichever is less).

The licensee states that the risk of an incident at a permanently shutdown and defueled reactor is much less than the risk from an operating power reactor. In addition, since reactor operation is no longer authorized at TMI–1, there are no events that would require the stabilization of reactor conditions after an accident. Similarly, the risk of an accident that would result in significant onsite contamination at TMI–1 is also much lower than the risk of such an event at operating reactors. Therefore, the licensee requested an exemption from 10 CFR 50.54(w)(1) to reduce its onsite property damage insurance from $1.06 billion to $50 million, commensurate with the reduced risk of an incident at the permanently shutdown and defueled TMI–1 site.

III. Discussion

Under 10 CFR 50.12, the Commission may, upon application by any interested person or upon its own initiative, grant exemptions from the requirements of 10 CFR part 50 when (1) the exemptions are authorized by law, will not present an undue risk to public health or safety, and are consistent with the common defense and security; and (2) any of the special circumstances listed in 10 CFR 50.12(a)(2) are present.

The financial protection limits of 10 CFR 50.54(w)(1) were established after the Three Mile Island Nuclear Station, Unit 2 accident out of concern that licensees may be unable to financially cover onsite cleanup costs in the event of a major nuclear accident. The specified $1.06 billion coverage amount requirement was developed based on an analysis of an accident at a nuclear reactor operating at power resulting in a large fission product release and requiring significant resource expenditures to stabilize the reactor and ultimately decontaminate and cleanup the site.

These cost estimates were developed based on the spectrum of postulated accidents for an operating nuclear reactor. Those costs were derived from the consequences of a release of radioactive material from the reactor. Although the risk of an accident at an operating reactor is very low, the consequences onsite and offsite can be significant. In an operating plant, the high temperature and pressure of the reactor coolant system (RCS), as well as the inventory of relatively short-lived radionuclides, contribute to both the risk and consequences of an accident. With the permanent cessation of reactor operations at TMI–1 and the permanent removal of the fuel from the reactor vessel, such accidents are no longer possible. As a result, the reactor vessel, RCS, and supporting systems no longer operate and have no function related to the storage of the irradiated fuel. Therefore, postulated accidents involving failure or malfunction of the reactor, RCS, or supporting systems are no longer applicable.

During reactor decommissioning, the largest radiological risks are associated with the storage of spent fuel onsite. In the exemption request dated November 25, 2019, the licensee discussed both design-basis and beyond design-basis events involving irradiated fuel stored in the SFP. The licensee determined that there are no possible design-basis events at TMI–1 that could result in an offsite radiological release exceeding the limits established by the U.S. Environmental Protection Agency's (EPA) early phase Protective Action Guides (PAGs) of 1 roentgen equivalent man at the exclusion area boundary 365 days after permanent shutdown, as a way to demonstrate that any possible radiological releases would be minimal and would not require precautionary protective actions (*e.g.,* sheltering in place or evacuation). The NRC staff evaluated the radiological consequences associated with various decommissioning activities and the design-basis accidents at TMI–1, in consideration of a permanently shutdown and defueled condition. The possible design-basis accident scenarios at TMI–1 have greatly reduced radiological consequences. Based on its review, the NRC staff concluded that no reasonably conceivable design-basis accident exists that could cause an offsite release greater than the EPA PAGs.

The only incident that might lead to a significant radiological release at a decommissioning reactor is a zirconium fire. The zirconium fire scenario is a postulated, but highly unlikely, beyond design-basis accident scenario that involves loss of water inventory from the SFP resulting in a significant heatup of the spent fuel, and culminating in substantial zirconium cladding oxidation and fuel damage. The probability of a zirconium fire scenario is related to the decay heat of the irradiated fuel stored in the SFP. Therefore, the risks from a zirconium fire scenario continue to decrease as a function of the time since TMI–1 has been permanently shut down.

The Commission has previously authorized a lesser amount of onsite financial protection, based on this analysis of the zirconium fire risk. In SECY–96–256, ''Changes to Financial Protection Requirements for Permanently Shutdown Nuclear Power Reactors, 10 CFR 50.54(w) and 10 CFR 140.11,'' dated December 17, 1996 (ADAMS Accession No. ML15062A483), the NRC staff recommended changes to the power reactor financial protection regulations that would allow licensees to lower onsite insurance levels to $50 million upon demonstration that the fuel stored in the SFP can be air-cooled. In its Staff Requirements Memorandum to SECY–96–256, dated January 28, 1997 (ADAMS Accession No. ML15062A454), the Commission supported the NRC staff's recommendation that, among other things, would allow permanently shutdown power reactor licensees to reduce commercial onsite property damage insurance coverage to $50

million when the licensee was able to demonstrate the technical criterion that the spent fuel could be air-cooled if the SFP was drained of water.

The NRC staff has used this technical criterion to grant similar exemptions to other decommissioning reactors (*e.g.,* Maine Yankee Atomic Power Station, published in the **Federal Register** on January 19, 1999 (64 FR 2920); Zion Nuclear Power Station, published in the **Federal Register** on December 28, 1999 (64 FR 72700); Kewaunee Power Station, published in the **Federal Register** on March 24, 2015 (80 FR 15638); Crystal River Unit 3 Nuclear Generation Plant, published in the **Federal Register** on May 6, 2015 (80 FR 26100); Oyster Creek Nuclear Generating Station, published in the **Federal Register** on December 28, 2018 (83 FR 67365) and Pilgrim Nuclear Power Station, published in the **Federal Register** on January 13, 2020 (85 FR 1827)). These prior exemptions were based on these licensees demonstrating that the SFP could be air-cooled, consistent with the technical criterion discussed above.

Exelon's November 25, 2019, exemption request addressed air-cooling of fuel in a drained SFP. In the attachment to this request, the licensee compared TMI–1 fuel storage parameters with those used in NRC generic evaluations of fuel cooling included in NUREG/CR–6451, ''A Safety and Regulatory Assessment of Generic BWR [Boiling-Water Reactor] and PWR [Pressurized-Water Reactor] Permanently Shutdown Nuclear Power Plants,'' dated August 1997 (ADAMS Accession No. ML082260098). The analysis described in NUREG/CR–6451 determined that natural air circulation would adequately cool fuel that has decayed for 17 months after operation in a typical PWR, which is slightly longer than the zirconium fire period of 488 days that Exelon used for its reqest for TMI–1. Exelon evaluated the decay heat at TMI–1 and determined that the average decay heat for the most recently offloaded TMI–1 spent fuel assembly 488 days after shutdown will be slightly less than the decay heat for the average fuel assembly at 519 days for the representative PWR plant in NUREG/CR–6451. This is in part because the power per fuel assembly at TMI–1 is 16 percent less than that modeled in NUREG/CR–6451.

The licensee compared the post-shutdown fuel storage conditions with those assumed for the analysis presented in NUREG/CR–6451. The licensee found that the TMI–1 fuel storage configuration is conservative in comparison to the representative configuration used in the NUREG/CR–6451 analysis with respect to the fuel assembly size (15 x 15 for TMI–1 vs. 17 x 17 for NUREG/CR–6451), the fuel storage pitch (TMI–1's is smaller, due to a larger gap around fuel assemblies inside the cells), and the rack orifice size being the same size or larger than those modeled in NUREG/CR–6451. Thus, the cooling air flow should be comparable. Differences in the rack material were determined to have minimal impact, based on Table 3.1 of NUREG/CR–6441, which states that heat conduction in structures is of low relative importance when computing cladding temperatures, although racks for both TMI–1 and the NUREG/CR–6451 model are stainless steel.

Therefore, at 488 days after permanent shutdown (*i.e.,* the effective date of the requested exemption), the NRC staff has reasonable assurance that fuel stored in the TMI–1 SFP would be adequately air-cooled in the highly unlikely event the SFP completely drained.

In SECY–00–0145, ''Integrated Rulemaking Plan for Nuclear Power Plant Decommissioning,'' dated June 28, 2000, and SECY–01–0100, ''Policy Issues Related to Safeguards, Insurance, and Emergency Preparedness Regulations at Decommissioning Nuclear Power Plants Storing Fuel in the Spent Fuel Pool,'' dated June 4, 2001 (ADAMS Accession Nos. ML003721626 and ML011450420, respectively), the NRC staff discussed additional information concerning SFP zirconium fire risks at decommissioning reactors and associated implications for onsite property damage insurance. Providing an analysis of when the spent fuel stored in the SFP is capable of air-cooling is one measure that can be used to demonstrate that the probability of a zirconium fire is exceedingly low. However, the NRC staff has more recently used an additional analysis that bounds an incomplete drain down of the SFP water, or some other catastrophic event (such as a complete drainage of the SFP with rearrangement of spent fuel rack geometry and/or the addition of rubble to the SFP). The analysis postulates that decay heat transfer from the spent fuel via conduction, convection, or radiation would be impeded. This analysis is often referred to as an adiabatic heatup.

The licensee's adiabatic heatup analyses demonstrate that there would be at least 10 hours after the loss of all means of cooling (both air and/or water), before the spent fuel cladding would reach a temperature where the potential for a significant offsite radiological release could occur. The licensee states that for this loss of all cooling scenario, 10 hours is sufficient time for personnel to respond with additional resources, equipment, and capability to restore cooling to the SFPs, even after a non-credible, catastrophic event.

In the analysis provided in the attachment to its November 25, 2019, exemption request, the licensee compared the conditions for the hottest fuel assembly stored in the SFP to a criterion proposed in SECY–99–168, ''Improving Decommissioning Regulations for Nuclear Power Plants,'' dated June 30, 1999 (ADAMS Accession No. ML12265A598), applicable to offsite emergency response for the unit in the decommissioning process. This criterion considers the time for the hottest assembly to heat up from 30 degrees Celsius (°C) to 900 °C adiabatically. If the heatup time is greater than 10 hours, then offsite emergency preplanning involving the plant is not necessary. Based on the limiting fuel assembly for decay heat and adiabatic heatup analysis presented in the attachment, at 488 days after permanent cessation of power operations (*i.e.,* 488 days of decay time), the time for the hottest fuel assembly to reach 900 °C is greater than 10 hours after the assemblies have been uncovered. As stated in NUREG–1738, ''Technical Study of Spent Fuel Pool Accident Risk at Decommissioning Nuclear Power Plants,'' dated February 2001 (ADAMS Accession No. ML010430066), 900 °C is an acceptable temperature to use for assessing onset of fission product release under transient conditions to establish the critical decay time for determining the availability of 10 hours for deployment of mitigation equipment and, if necessary, for offsite agencies to take appropriate action to protect the health and safety of the public if fuel and cladding oxidation occurs in air.

The NRC staff reviewed the calculation to verify that important physical properties of materials were within acceptable ranges and the results were accurate. The NRC staff determined that physical properties were appropriate. Therefore, the NRC staff found that 488 days after permanent cessation of power operations, more than 10 hours would be available before a significant offsite release could begin. The NRC staff concluded that the adiabatic heatup calculation provided an acceptable method for determining the minimum time available for deployment of mitigation equipment and, if necessary, implementing measures under a comprehensive general emergency plan.

The NRC staff performed an evaluation of the design-basis accidents for TMI–1 being permanently defueled as part of SECY–20–0041, ''Request by Exelon Generation Company, LLC for Exemptions from Certain Emergency Planning Requirements for the Three Mile Island Nuclear Station,'' dated May 5, 2020 (ADAMS Accession No. ML19311C762).

Based on the evaluation in SECY–20–0041 and SECY–96–256, the NRC staff determined $50 million to be an adequate level of onsite property damage insurance for a decommissioning reactor once the spent fuel in the SFP is no longer susceptible to a zirconium fire. The NRC staff has postulated that there is still a potential for other radiological incidents at a decommissioning reactor that could result in significant onsite contamination besides a zirconium fire. In SECY–96–256, the NRC staff cited the rupture of a large contaminated liquid storage tank (~450,000 gallon) causing soil contamination and potential groundwater contamination as the most costly postulated event to decontaminate and remediate (other than an SFP zirconium fire). The postulated large liquid radiological waste storage tank rupture event was determined to have a bounding onsite cleanup cost of approximately $50 million. Therefore, the NRC staff determined that the licensee's proposal to reduce onsite insurance to a level of $50 million would be consistent with the bounding cleanup and decontamination cost, as discussed in SECY–96–256, to account for the postulated rupture of a large liquid radiological waste tank at the TMI–1 site, should such an event occur.

The NRC staff has determined that the licensee's proposed reduction in onsite property damage insurance coverage to a level of $50 million is consistent with SECY–96–256 and subsequent insurance considerations resulting from additional zirconium fire risks as discussed in SECY–00–0145 and SECY–01–0100. In addition, the NRC staff notes that similar exemptions have been granted to other permanently shutdown and defueled power reactors, upon demonstration that the criterion of the zirconium fire risks from the irradiated fuel stored in the SFP is of negligible concern. As previously stated, the NRC staff concluded that 488 days after the permanent cessation of power operations on September 20, 2019, sufficient irradiated fuel decay time will have elapsed at TMI–1 to decrease the probability of an onsite radiological release from a postulated zirconium fire accident to negligible levels. In addition, the licensee's proposal to reduce onsite insurance to a level of $50 million is consistent with the maximum estimated cleanup costs for the recovery from the rupture of a large liquid radwaste storage tank.

The NRC staff also notes that in accordance with the TMI–1 Post-Shutdown Decommissioning Activities Report dated April 2019 (ADAMS Accession No. ML19095A041), all spent fuel will be removed from the SFP and moved into dry storage at an onsite independent spent fuel storage installation by the end of 2022, and the probability of an initiating event that would threaten SFP integrity occurring before that time is extremely low, which further supports the conclusion that the zirconium fire risk is negligible.

A. The Exemption Is Authorized by Law

The requested exemption from 10 CFR 50.54(w)(1) would allow Exelon to reduce the minimum coverage limit for onsite property damage insurance. As stated above, 10 CFR 50.12 allows the NRC to grant exemptions from the requirements of 10 CFR part 50 when the exemptions are authorized by law.

As explained above, the NRC staff has determined that the licensee's proposed reduction in onsite property damage insurance coverage to a level of $50 million is consistent with SECY–96–256. Moreover, the NRC staff concluded that 488 days after the permanent cessation of power operations, sufficient irradiated fuel decay time will have elapsed at TMI–1 to decrease the probability of an onsite and offsite radiological release from a postulated zirconium fire accident to negligible levels. In addition, the licensee's proposal to reduce onsite insurance to a level of $50 million is consistent with the maximum estimated cleanup costs for the recovery from the rupture of a large liquid radiological waste storage tank.

The NRC staff has determined that granting the licensee's proposed exemption will not result in a violation of the Atomic Energy Act of 1954, as amended, or the Commission's regulations. Therefore, based on its review of the licensee's exemption request as discussed above, and consistent with SECY–96–256, the NRC staff concludes that the exemption is authorized by law.

B. The Exemption Presents No Undue Risk to the Public Health and Safety

The onsite property damage insurance requirements of 10 CFR 50.54(w)(1) were established to provide financial assurance that following a significant nuclear incident, onsite conditions could be stabilized and the site decontaminated. The requirements of 10 CFR 50.54(w)(1) and the existing level of onsite insurance coverage for TMI–1 are predicated on the assumption that the reactor is operating. However, TMI–1 permanently shut down on September 20, 2019, and permanently defueled as of September 26, 2019. The permanently shutdown and defueled status of the facility results in a significant reduction in the number and severity of potential accidents and, correspondingly, a significant reduction in the potential for and severity of onsite property damage. The proposed reduction in the amount of onsite insurance coverage does not impact the probability or consequences of potential accidents. The proposed level of insurance coverage is commensurate with the reduced consequences of potential nuclear accidents at TMI–1. Therefore, the NRC staff concludes that granting the requested exemption will not present an undue risk to the health and safety of the public.

C. The Exemption Is Consistent With the Common Defense and Security

The proposed exemption would not eliminate any requirements associated with physical protection of the site and would not adversely affect the licensee's ability to physically secure the site or protect special nuclear material. Physical security measures at TMI–1 are not affected by the requested exemption. Therefore, the proposed exemption is consistent with the common defense and security.

D. Special Circumstances

Special circumstances, in accordance with 10 CFR 50.12(a)(2)(ii), are present whenever application of the regulation in the particular circumstances is not necessary to achieve the underlying purpose of the regulation.

The underlying purpose of 10 CFR 50.54(w)(1) is to provide reasonable assurance that adequate funds will be available to stabilize reactor conditions and cover onsite cleanup costs associated with site decontamination following an accident that results in the release of a significant amount of radiological material. Since TMI–1 permanently shut down on September 20, 2019, and permanently defueled as of September 26, 2019, it is no longer possible for the radiological consequences of design-basis accidents or other credible events at TMI–1 to exceed the limits of the EPA PAGs at the exclusion area boundary. The licensee has evaluated the consequences of highly unlikely, beyond-design-basis conditions involving a loss of coolant

from the SFP. The analyses show that 488 days after the permanent cessation of power operations on September 20, 2019, the likelihood of such an event leading to a large radiological release is negligible. The NRC staff's evaluation of the licensee's analyses confirm this conclusion.

The NRC staff also finds that the licensee's proposed $50 million level of onsite insurance is consistent with the bounding cleanup and decontamination cost as discussed in SECY–96–256, to account for the hypothetical rupture of a large liquid radiological waste tank at the TMI–1 site, should such an event occur. Therefore, the NRC staff concludes that the application of the current requirements in 10 CFR 50.54(w)(1) to maintain $1.06 billion in onsite insurance coverage is not necessary to achieve the underlying purpose of the rule for the permanently shutdown and defueled TMI–1 reactor.

Under 10 CFR 50.12(a)(2)(iii), special circumstances are present whenever compliance would result in undue hardship or other costs that are significantly in excess of those contemplated when the regulation was adopted, or that are significantly in excess of those incurred by others similarly situated.

The NRC staff concludes that if the licensee was required to continue to maintain an onsite insurance level of $1.06 billion, the associated insurance premiums would be in excess of those necessary and commensurate with the radiological contamination risks posed by the site. In addition, such insurance levels would be significantly in excess of other decommissioning reactor facilities that have been granted similar exemptions by the NRC.

The NRC staff finds that compliance with the existing rule would result in an undue hardship or other costs that are significantly in excess of those contemplated when the regulation was adopted and are significantly in excess of those incurred by others similarly situated.

Therefore, the special circumstances required by 10 CFR 50.12(a)(2)(ii) and 10 CFR 50.12(a)(2)(iii) exist.

E. Environmental Considerations

The NRC's approval of an exemption from insurance or indemnity requirements belongs to a category of actions that the Commission, by rule or regulation, has declared to be a categorical exclusion after first finding that the category of actions does not individually or cumulatively have a significant effect on the human environment. Specifically, the exemption is categorically excluded from the requirement to prepare an environmental assessment or environmental impact statement in accordance with 10 CFR 51.22(c)(25).

Under 10 CFR 51.22(c)(25), granting of an exemption from the requirements of any regulation of Chapter I to 10 CFR is a categorical exclusion provided that: (i) There is no significant hazards consideration; (ii) there is no significant change in the types or significant increase in the amounts of any effluents that may be released offsite; (iii) there is no significant increase in individual or cumulative public or occupational radiation exposure; (iv) there is no significant construction impact; (v) there is no significant increase in the potential for or consequences from radiological accidents; and (vi) the requirements from which an exemption is sought involve surety, insurance, or indemnity requirements.

As the Director, Division of Decommissioning, Uranium Recovery and Waste Programs, Office of Nuclear Material Safety and Safeguards, I have determined that approval of the exemption request involves no significant hazards consideration, as defined in 10 CFR 50.92, because reducing the licensee's onsite property damage insurance for TMI–1 does not: (1) Involve a significant increase in the probability or consequences of an accident previously evaluated; (2) create the possibility of a new or different kind of accident from any accident previously evaluated; or (3) involve a significant reduction in a margin of safety. The exempted financial protection regulation is unrelated to the operation of TMI–1 or site activities. Accordingly, there is no significant change in the types or significant increase in the amounts of any effluents that may be released offsite and no significant increase in individual or cumulative public or occupational radiation exposure. The exempted regulation is not associated with construction so there is no significant construction impact. The exempted regulation does not concern the source term (*i.e.,* potential amount of radiation in an accident) or any activities conducted at the site. Therefore, there is no significant increase in the potential for, or consequences of, a radiological accident. In addition, there would be no significant impacts to biota, water resources, historic properties, cultural resources, or socioeconomic conditions in the region resulting from issuance of the requested exemption. The requirement for onsite property damage insurance involves surety, insurance, and indemnity matters only.

Therefore, pursuant to 10 CFR 51.22(b) and 51.22(c)(25), no environmental impact statement or environmental assessment need be prepared in connection with the approval of this exemption request.

IV. Conclusions

Accordingly, the Commission has determined that, pursuant to 10 CFR 50.12(a), the exemption is authorized by law, will not present an undue risk to the public health and safety, and is consistent with the common defense and security. Also, special circumstances are present as set forth in 10 CFR 50.12.

Therefore, the Commission hereby grants Exelon an exemption from the requirements of 10 CFR 50.54(w)(1) for TMI–1. TMI–1 permanently ceased power operations on September 20, 2019. The exemption permits TMI–1 to lower the minimum required onsite insurance to $50 million 488 days after permanent cessation of power operations, which occurred on January 20, 2021.

The exemption is effective immediately.

Dated: March 22, 2021.

For the Nuclear Regulatory Commission.

Patricia K. Holahan,

Director, Division of Decommissioning, Uranium Recovery and Waste Programs, Office of Nuclear Material Safety and Safeguards.

[FR Doc. 2021–06328 Filed 3–25–21; 8:45 am]

BILLING CODE 7590–01–P

SECURITIES AND EXCHANGE COMMISSION

[SEC File No. 270–141, OMB Control No. 3235–0249]

Proposed Collection; Comment Request

Upon Written Request, Copies Available From: U.S. Securities and Exchange Commission, Office of FOIA Services, 100 F Street NE, Washington, DC 20549–2736

Extension:
Rule 12f–3

Notice is hereby given that pursuant to the Paperwork Reduction Act of 1995 (''PRA'') (44 U.S.C. 3501 *et seq.*), the Securities and Exchange Commission (''Commission'') is soliciting comments on the existing collection of information provided for in Rule 12f–3 (17 CFR 240.12f–3), under the Securities Exchange Act of 1934 (''Act'') (15 U.S.C. 78a *et seq.*). The Commission plans to submit this existing collection of

information to the Office of Management and Budget (''OMB'') for extension and approval.

Rule 12f–3 (''Rule''), which was originally adopted in 1955 pursuant to Sections 12(f) and 23(a) of the Act, and as further modified in 1995, sets forth the requirements to submit an application to the Commission for termination or suspension of unlisted trading privileges in a security, as contemplated under Section 12(f)(4) of the Act. In addition to requiring that one copy of the application be filed with the Commission, the Rule requires that the application contain specified information. Under the Rule, an application to suspend or terminate unlisted trading privileges must provide, among other things, the name of the applicant; a brief statement of the applicant's interest in the question of termination or suspension of such unlisted trading privileges; the title of the security; the name of the issuer; certain information regarding the size of the class of security, the public trading volume and price history in the security for specified time periods on the subject exchange and a statement indicating that the applicant has provided a copy of such application to the exchange from which the suspension or termination of unlisted trading privileges are sought, and to any other exchange on which the security is listed or admitted to unlisted trading privileges.

The information required to be included in applications submitted pursuant to Rule 12f–3, is intended to provide the Commission with sufficient information to make the necessary findings under the Act to terminate or suspend by order the unlisted trading privileges granted a security on a national securities exchange. Without the Rule, the Commission would be unable to fulfill these statutory responsibilities.

The burden of complying with Rule 12f–3 arises when a potential respondent, having a demonstrable bona fide interest in the question of termination or suspension of the unlisted trading privileges of a security, determines to seek such termination or suspension. The staff estimates that each such application to terminate or suspend unlisted trading privileges requires approximately one hour to complete. Thus each potential respondent would incur on average one burden hour in complying with the Rule.

The Commission staff estimates that there could be as many as 18 responses annually for an aggregate burden for all respondents of 18 hours. Each respondent's related internal cost of compliance for Rule 12f–3 would be $221.00, or, the cost of one hour of professional work of a paralegal needed to complete the application. The total annual internal cost of compliance for all potential respondents, therefore, is $3,978.00 (18 responses × $221.00/response).

Compliance with the application requirements of Rule 12f–3 is mandatory, though the filing of such applications is undertaken voluntarily. Rule 12f–3 does not have a record retention requirement *per se*. However, responses made pursuant to Rule 12f–3 are subject to the recordkeeping requirements of Rules 17a–3 and 17a–4 of the Act. Information received in response to Rule 12f–3 shall not be kept confidential; the information collected is public information.

Written comments are invited on: (a) Whether the proposed collection of information is necessary for the proper performance of the functions of the Commission, including whether the information shall have practical utility; (b) the accuracy of the Commission's estimates of the burden of the proposed collection of information; (c) ways to enhance the quality, utility, and clarity of the information on respondents; and (d) ways to minimize the burden of the collection of information on respondents, including through the use of automated collection techniques or other forms of information technology. Consideration will be given to comments and suggestions submitted in writing within 60 days of this publication.

An agency may not conduct or sponsor, and a person is not required to respond to, a collection of information under the PRA unless it displays a currently valid OMB control number.

Please direct your written comments to: David Bottom, Director/Chief Information Officer, Securities and Exchange Commission, c/o Cynthia Roscoe, 100 F Street NE, Washington DC, 20549 or send an email to: *PRA_Mailbox@sec.gov.*

Dated: March 22, 2021.

J. Matthew DeLesDernier,

Assistant Secretary.

[FR Doc. 2021–06242 Filed 3–25–21; 8:45 am]

BILLING CODE 8011–01–P

SECURITIES AND EXCHANGE COMMISSION

[SEC File No. 270–563, OMB Control No. 3235–0694]

Proposed Collection; Comment Request

Upon Written Request, Copies Available From: Securities and Exchange Commission, Office of FOIA Services, 100 F Street NE, Washington, DC 20549–2736

Extension:
Rule 17g–10 and Form ABS Due Diligence—15E

Notice is hereby given that pursuant to the Paperwork Reduction Act of 1995 (44 U.S.C. 3501 *et seq.*), the Securities and Exchange Commission (''Commission'') is soliciting comments on the existing collection of information provided for in Rule 17g–10 and Form ABS Due Diligence—15E under the Securities Exchange Act of 1934 (15 U.S.C. 78a *et seq.*).[1] The Commission plans to submit this existing collection of information to the Office of Management and Budget for extension and approval.

Rule 17g–10 contains certain certification requirements for third-party due diligence service providers that are employed by an NRSRO, an issuer, or an underwriter, which must be made on Form ABS Due Diligence—15E. The Commission estimates that the total burden for respondents to comply with Rule 17g–10 is 330 hours.

Written comments are invited on: (a) Whether the proposed collection of information is necessary for the proper performance of the functions of the Commission, including whether the information shall have practical utility; (b) the accuracy of the Commission's estimates of the burden of the proposed collection of information; (c) ways to enhance the quality, utility, and clarity of the information on respondents; and (d) ways to minimize the burden of the collection of information on respondents, including through the use of automated collection techniques or other forms of information technology. Consideration will be given to comments and suggestions submitted in writing within 60 days of this publication.

The Commission may not conduct or sponsor a collection of information unless it displays a currently valid control number. No person shall be subject to any penalty for failing to comply with a collection of information subject to the PRA that does not display

[1] *See* 17 CFR 240.17g–1 and 17 CFR 249b.300.

a valid Office of Management and Budget (OMB) control number.

Please direct your written comments to: Dave Bottom, Director/Chief Information Officer, Securities and Exchange Commission, c/o Cynthia Roscoe, 100 F St. NE, Washington, DC 20549 or send an email to: *PRA_Mailbox@sec.gov.*

Dated: March 22, 2021.

J. Matthew DeLesDernier,

Assistant Secretary.

[FR Doc. 2021–06240 Filed 3–25–21; 8:45 am]

BILLING CODE 8011–01–P

SECURITIES AND EXCHANGE COMMISSION

[Release No. 34–91385; File No. SR–CFE–2021–007]

Self-Regulatory Organizations; Cboe Futures Exchange, LLC; Notice of a Filing of a Proposed Rule Change Regarding Position Limit Rule Updates

March 22, 2021.

Pursuant to Section 19(b)(7) of the Securities Exchange Act of 1934 (''Act''),[1] notice is hereby given that on March 15, 2021 Cboe Futures Exchange, LLC (''CFE'' or ''Exchange'') filed with the Securities and Exchange Commission (''Commission'') the proposed rule change described in Items I, II, and III below, which Items have been prepared by CFE. The Commission is publishing this notice to solicit comments on the proposed rule change from interested persons. CFE also has filed this proposed rule change with the Commodity Futures Trading Commission (''CFTC''). CFE filed a written certification with the CFTC under Section 5c(c) of the Commodity Exchange Act (''CEA'')[2] on March 15, 2021.

I. Self-Regulatory Organization's Description of the Proposed Rule Change

The Exchange proposes to update certain of its rule provisions relating to position limits.

The rule amendments included as part of this proposed rule change are to apply to all products traded on CFE, including both non-security futures and any security futures that may be listed for trading on CFE. The scope of this filing is limited solely to the application of the proposed rule change to security futures that may be traded on CFE. Although no security futures are currently listed for trading on CFE, CFE may list security futures for trading in the future.

The text of the proposed rule change is attached as Exhibit 4 to the filing but is not attached to the publication of this notice.

II. Self-Regulatory Organization's Statement of the Purpose of, and Statutory Basis for, the Proposed Rule Change

In its filing with the Commission, CFE included statements concerning the purpose of and basis for the proposed rule change and discussed any comments it received on the proposed rule change. The text of these statements may be examined at the places specified in Item IV below. CFE has prepared summaries, set forth in Sections A, B, and C below, of the most significant aspects of such statements.

A. Self-Regulatory Organization's Statement of the Purpose of, and Statutory Basis for, the Proposed Rule Change

1. Purpose

CFE Rule 412 (Position Limits) governs CFE position limits and position limit exemptions. The CFTC recently amended its position limit regulations in Part 150[3] of the CFTC Regulations.[4] Among other things, revised Part 150[5] imposes federal position limits for ''referenced contracts,'' which include (1) 25 ''core referenced futures contracts'' (made up of nine ''legacy agricultural contracts'' (*e.g.,* CBOT Corn) and 16 ''non-legacy contracts'' (*e.g.,* ICE Cocoa)), (2) futures contracts and options on futures contracts directly or indirectly linked to a core referenced futures contract, and (3) ''economically equivalent swaps.'' CFE does not currently offer for trading any products that are subject to the requirements of revised Part 150[6] of the CFTC Regulations. Instead, CFE offers for trading futures on excluded commodities, which are not within the scope of revised Part 150[7] of the CFTC Regulations. Although the changes to Part 150[8] of the CFTC Regulations do not apply to CFE's products, CFE is proposing to make the following three updates to Rule 412 in light of the changes made by the CFTC to Part 150[9] of the CFTC Regulations. CFE is proposing to make these updates to Rule 412 in order to align certain language of Rule 412 with the language of revised Part 150[10] of the CFTC Regulations and to make clear that CFE will adhere to the applicable provisions of Part 150[11] if CFE were ever to list a product that is subject to the provisions of Part 150.[12]

Rule 412(b) currently provides that position limits shall be as established by the Exchange from time to time as permitted by CFTC Regulations 150[13] and 41.25[14] as applicable. The reference in Rule 412(b) to CFTC Regulation 150[15] is intended to refer to Part 150[16] of the CFTC Regulations. CFTC Regulation 41.25[17] governs position limits for security futures products. In addition to being able to establish position limits for products governed by Part 150[18] of the CFTC Regulations as permitted by Part 150[19] and for security futures products as permitted by CFTC Regulation 41.25,[20] CFE is also able to establish position limits for other products as permitted by CFTC Regulation 38.300.[21] CFTC Regulation 38.300[22] restates Designated Contract Market (''DCM'') Core Principle 5 (Position Limitations or Accountability) under Section 5 of the CEA[23] and applies to all products offered for trading by a DCM. CFTC Regulation 38.300[24] provides, in relevant part, that to reduce the potential threat of market manipulation or congestion (especially during trading in the delivery month), a DCM shall adopt for each contract of the DCM, as is necessary and appropriate, position limitations or position accountability for speculators. In order to more clearly reflect the reference to Part 150[25] of the CFTC Regulations in Rule 412(b) and to also reference CFTC Regulation 38.300[26] in Rule 412(b), the proposed rule change proposes to revise Rule 412(b) to provide that CFE position limits shall be as established by the Exchange from time to time as permitted by CFTC Regulation 38.300,[27] Part

[1] 15 U.S.C. 78s(b)(7).

[2] 7 U.S.C. 7a–2(c).

[3] 17 CFR part 150.

[4] *See* CFTC Final Rule Regarding Position Limits for Derivatives, 86 FR 3236 (January 14, 2021).

[5] 17 CFR part 150.

[6] 17 CFR part 150.

[7] 17 CFR part 150.

[8] 17 CFR part 150.

[9] 17 CFR part 150.

[10] 17 CFR part 150.

[11] 17 CFR part 150.

[12] 17 CFR part 150.

[13] 17 CFR part 150.

[14] 17 CFR 41.25.

[15] 17 CFR part 150.

[16] 17 CFR part 150.

[17] 17 CFR 41.25.

[18] 17 CFR part 150.

[19] 17 CFR part 150.

[20] 17 CFR 41.25.

[21] 17 CFR 38.300.

[22] 17 CFR 38.300.

[23] 7 U.S.C. 7(d)(5).

[24] 17 CFR 38.300.

[25] 17 CFR part 150.

[26] 17 CFR 38.300.

[27] 17 CFR 38.300.

150[28] of the CFTC Regulations, and CFTC Regulation 41.25,[29] as applicable.

The proposed rule change also proposes to remove from Rule 412(c) and Rule 412(d)(i) references to prior CFTC Regulation 1.3(z)[30] which has been superseded by revisions to Part 150[31] of the CFTC Regulations. Prior CFTC Regulation 1.3(z)[32] previously included a definition of the term ''bona fide hedging transaction for excluded commodities,'' but with the CFTC's amended position limit regulations, CFTC Regulation 1.3[33] no longer contains a definition for bona fide hedge transaction. Accordingly, the proposed rule change proposes to remove a reference to prior CFTC Regulation 1.3(z)[34] in current Rule 412(c) which provides that the term ''bona fide hedge transaction'' means any transaction or position in a particular contract based the requirements of CFTC Regulation 1.3(z).[35] The proposed rule change also proposes to remove references to prior CFTC Regulation 1.3(z)[36] in current Rule 412(d)(1) [sic] which requires representations in a position limit exemption request for a bona fide hedge transaction with respect to satisfaction of the requirements of CFTC Regulation 1.3(z).[37] The proposed rule change also proposes to revise Rule 412(c) and Rule 412(d)(1) [sic] to refer to a ''bona fide hedge transaction or position'' instead of to a ''bona fide hedge transaction'' consistent with how the CFTC now refers to this term.[38]

Finally, the proposed rule change proposes to revise Rule 412(c) to provide that to the extent that a contract is subject to federal position limits or otherwise subject to the provisions Part 150[39] of the CFTC Regulations, the Exchange shall adhere to the applicable provisions Part 150[40] of the CFTC Regulations, including any applicable definitions and requirements, in relation to any position limit exemption requests relating to that contract. As noted above, Part 150 does not apply to futures on excluded commodities, which are the only products that CFE currently lists for trading. Thus, while CFE does not currently offer for trading any contract subject to federal position limits or otherwise subject to the provisions of Part 150[41] of the CFTC Regulations, this provision makes clear that CFE will comply with the applicable provisions of Part 150[42] in the event that CFE were to list this type of contract for trading in the future. Additionally, this provision makes clear that CFE will apply the definitions included in Part 150[43] of the CFTC Regulations to the extent that they are applicable. As a result, CFE is not including or cross-referencing those specific definitions in Rule 412.

CFE is proposing to make these three targeted updates to Rule 412 now so that its provisions are not out of date. CFE may propose further updates to Rule 412 in the future if it were to ever list for trading any contract subject to the provisions of Part 150[44] of the CFTC Regulations or in light of how other DCMs that offer trading in products not subject to the provisions of Part 150[45] of the CFTC Regulations may amend their position limit rules in light of the revisions that the CFTC has made to its position limit regulations.

2. Statutory Basis

The Exchange believes that the proposed rule change is consistent with Section 6(b) of the Act,[46] in general, and furthers the objectives of Sections 6(b)(1)[47] and 6(b)(5)[48] in particular, in that it is designed:

- To enable the Exchange to enforce compliance by its Trading Privilege Holders and persons associated with its Trading Privilege Holders with the provisions of the rules of the Exchange,
- to prevent fraudulent and manipulative acts and practices,
- to promote just and equitable principles of trade,
- to remove impediments to and perfect the mechanism of a free and open market and a national market system,
- and in general, to protect investors and the public interest.

The Exchange believes that the rule updates included in the proposed rule change will contribute to CFE's ability to enforce CFE's rule provisions regarding position limits and position limit exemptions and thus contribute to the protection of investors and the public interest. The proposed rule updates are consistent with the position limit regulations adopted by the CFTC and remove superseded references in CFE's rules. The proposed rule updates will also provide additional clarity to Trading Privilege Holders regarding the application of CFE's rule provisions relating to position limits and position limit exemptions. Additionally, the Exchange believes that the proposed rule change is equitable and not unfairly discriminatory in that the rule amendments included in the proposed rule change would apply equally to all Trading Privilege Holders.

B. Self-Regulatory Organization's Statement on Burden on Competition

CFE does not believe that the proposed rule changes will impose any burden on competition not necessary or appropriate in furtherance of the purposes of the Act. Specifically, the Exchange believes that the proposed rule change will not burden intra-market competition because the proposed rule updates will apply equally to all Trading Privilege Holders. The Exchange also believes that the proposed rule change will not burden inter-market competition since the proposed rule change is consistent with CFTC regulations and will enhance CFE's ability to carry out its responsibilities as a self-regulatory organization.

C. Self-Regulatory Organization's Statement on Comments on the Proposed Rule Change Received From Members, Participants, or Others

No written comments were solicited or received with respect to the proposed rule change.

III. Date of Effectiveness of the Proposed Rule Change and Timing for Commission Action

The proposed rule change will become operative on March 29, 2021. At any time within 60 days of the date of effectiveness of the proposed rule change, the Commission, after consultation with the CFTC, may summarily abrogate the proposed rule change and require that the proposed rule change be refiled in accordance with the provisions of Section 19(b)(1) of the Act.[49]

IV. Solicitation of Comments

Interested persons are invited to submit written data, views, and arguments concerning the foregoing, including whether the proposed rule change is consistent with the Act. Comments may be submitted by any of the following methods:

[28] 17 CFR part 150.
[29] 17 CFR 41.25.
[30] 17 CFR 1.3(z).
[31] 17 CFR part 150.
[32] 17 CFR 1.3(z).
[33] 17 CFR 1.3.
[34] 17 CFR 1.3(z).
[35] 17 CFR 1.3(z).
[36] 17 CFR 1.3(z).
[37] 17 CFR 1.3(z).
[38] *See* 17 CFR 150.1(a).
[39] 17 CFR part 150.
[40] 17 CFR part 150.
[41] 17 CFR part 150.
[42] 17 CFR part 150.
[43] 17 CFR part 150.
[44] 17 CFR part 150.
[45] 17 CFR part 150.
[46] 15 U.S.C. 78f(b).
[47] 15 U.S.C. 78f(b)(1).
[48] 15 U.S.C. 78f(b)(5).
[49] 15 U.S.C. 78s(b)(1).

Electronic Comments

- Use the Commission's internet comment form (*http://www.sec.gov/rules/sro.shtml*); or
- Send an email to *rule-comments@sec.gov.* Please include File Number SR–CFE–2021–007 on the subject line.

Paper Comments

- Send paper comments in triplicate to Secretary, Securities and Exchange Commission, 100 F Street NE, Washington, DC 20549–1090.

All submissions should refer to File Number SR–CFE–2021–007. This file number should be included on the subject line if email is used. To help the Commission process and review your comments more efficiently, please use only one method. The Commission will post all comments on the Commission's internet website (*http://www.sec.gov/rules/sro.shtml*). Copies of the submission, all subsequent amendments, all written statements with respect to the proposed rule change that are filed with the Commission, and all written communications relating to the proposed rule change between the Commission and any person, other than those that may be withheld from the public in accordance with the provisions of 5 U.S.C. 552, will be available for website viewing and printing in the Commission's Public Reference Room, 100 F Street NE, Washington, DC 20549, on official business days between the hours of 10:00 a.m. and 3:00 p.m. Copies of the filing also will be available for inspection and copying at the principal office of the Exchange. All comments received will be posted without change. Persons submitting comments are cautioned that we do not redact or edit personal identifying information from comment submissions. You should submit only information that you wish to make available publicly. All submissions should refer to File Number SR–CFE–2021–007, and should be submitted on or before April 16, 2021.

For the Commission, by the Division of Trading and Markets, pursuant to delegated authority.[50]

J. Matthew DeLesDernier,

Assistant Secretary.

[FR Doc. 2021–06232 Filed 3–25–21; 8:45 am]

BILLING CODE 8011–01–P

[50] 17 CFR 200.30–3(a)(73).

SECURITIES AND EXCHANGE COMMISSION

[SEC File No. 270–526, OMB Control No. 3235–0584]

Proposed Collection; Comment Request

Upon Written Request, Copies Available From: Securities and Exchange Commission, Office of FOIA Services, 100 F Street NE, Washington, DC 20549–2736

Extension:
Rule 12d1–1

Notice is hereby given that, pursuant to the Paperwork Reduction Act of 1995 (44 U.S.C. 3501 *et seq.*), the Securities and Exchange Commission (the ''Commission'') is soliciting comments on the collection of information summarized below. The Commission plans to submit this existing collection of information to the Office of Management and Budget (''OMB'') for extension and approval.

An investment company (''fund'') is generally limited in the amount of securities the fund (''acquiring fund'') can acquire from another fund (''acquired fund''). Section 12(d) of the Investment Company Act of 1940 (the ''Investment Company Act'' or ''Act'')[1] provides that a registered fund (and companies it controls) cannot:

- Acquire more than three percent of another fund's securities;
- invest more than five percent of its own assets in another fund; or
- invest more than ten percent of its own assets in other funds in the aggregate.[2]

In addition, a registered open-end fund, its principal underwriter, and any registered broker or dealer cannot sell that fund's shares to another fund if, as a result:

- The acquiring fund (and any companies it controls) owns more than three percent of the acquired fund's stock; or
- all acquiring funds (and companies they control) in the aggregate own more than ten percent of the acquired fund's stock.[3]

Rule 12d1–1 under the Act provides an exemption from these limitations for ''cash sweep'' arrangements in which a fund invests all or a portion of its available cash in a money market fund rather than directly in short-term instruments.[4] An acquiring fund relying on the exemption may not pay a sales load, distribution fee, or service fee on acquired fund shares, or if it does, the acquiring fund's investment adviser must waive a sufficient amount of its advisory fee to offset the cost of the loads or distribution fees.[5] The acquired fund may be a fund in the same fund complex or in a different fund complex. In addition to providing an exemption from section 12(d)(1) of the Act, the rule provides exemptions from section 17(a) of the Act and rule 17d–1 thereunder, which restrict a fund's ability to enter into transactions and joint arrangements with affiliated persons.[6] These provisions would otherwise prohibit an acquiring fund from investing in a money market fund in the same fund complex,[7] and prohibit a fund that acquires five percent or more of the securities of a money market fund in another fund complex from making any additional investments in the money market fund.[8]

[1] *See* 15 U.S.C. 80a.

[2] *See* 15 U.S.C. 80a–12(d)(1)(A). If an acquiring fund is not registered, these limitations apply only with respect to the acquiring fund's acquisition of registered funds.

[3] *See* 15 U.S.C. 80a–12(d)(1)(B).

[4] *See* 17 CFR 270.12d1–1.

[5] *See* rule 12d1–1(b)(1).

[6] *See* 15 U.S.C. 80a–17(a), 15 U.S.C. 80a–17(d); 17 CFR 270.17d–1.

[7] An affiliated person of a fund includes any person directly or indirectly controlling, controlled by, or under common control with such other person. *See* 15 U.S.C. 80a–2(a)(3) (definition of ''affiliated person''). Most funds today are organized by an investment adviser that advises or provides administrative services to other funds in the same complex. Funds in a fund complex are generally under common control of an investment adviser or other person exercising a controlling influence over the management or policies of the funds. *See* 15 U.S.C. 80a–2(a)(9) (definition of ''control''). Not all advisers control funds they advise. The determination of whether a fund is under the control of its adviser, officers, or directors depends on all the relevant facts and circumstances. *See* Investment Company Mergers, Investment Company Act Release No. 25259 (Nov. 8, 2001) [66 FR 57602 (Nov. 15, 2001)], at n.11. To the extent that an acquiring fund in a fund complex is under common control with a money market fund in the same complex, the funds would rely on the rule's exemptions from section 17(a) and rule 17d–1.

[8] *See* 15 U.S.C. 80a–2(a)(3)(A), (B).

The rule also permits a registered fund to rely on the exemption to invest in an unregistered money market fund that limits its investments to those in which a registered money market fund may invest under rule 2a–7 under the Act, and undertakes to comply with all the other provisions of rule 2a–7.[9] In addition, the acquiring fund must reasonably believe that the unregistered money market fund (i) operates in compliance with rule 2a–7, (ii) complies with sections 17(a), (d), (e), 18, and 22(e) of the Act [10] as if it were a registered open-end fund, (iii) has adopted procedures designed to ensure that it complies with these statutory provisions, (iv) maintains the records required by rules 31a–1(b)(1), 31a–1(b)(2)(ii), 31a–1(b)(2)(iv), and 31a–1(b)(9); [11] and (v) preserves permanently, the first two years in an easily accessible place, all books and records required to be made under these rules.

Rule 2a–7 contains certain collection of information requirements. An unregistered money market fund that complies with rule 2a–7 would be subject to these collection of information requirements. In addition, the recordkeeping requirements under rule 31a–1 with which the acquiring fund reasonably believes the unregistered money market fund complies are collections of information for the unregistered money market fund. The adoption of procedures by unregistered money market funds to ensure that they comply with sections 17(a), (d), (e), 18, and 22(e) of the Act also constitute collections of information. By allowing funds to invest in registered and unregistered money market funds, rule 12d1–1 is intended to provide funds greater options for cash management. In order for a registered fund to rely on the exemption to invest in an unregistered money market fund, the unregistered money market fund must comply with certain collection of information requirements for registered money market funds. These requirements are intended to ensure that the unregistered money market fund has established procedures for collecting the information necessary to make adequate credit reviews of securities in its portfolio, as well as other recordkeeping requirements that will assist the acquiring fund in overseeing the unregistered money market fund (and Commission staff in its examination of the unregistered money market fund's adviser).

The estimated average burden hours in this collection of information are made solely for purposes of the Paperwork Reduction Act and are not derived from a quantitative, comprehensive or even representative survey or study of the burdens associated with Commission rules and forms.

The number of unregistered money market funds that are affected by rule 12d1–1 is an estimate based on the number of private liquidity funds reported on Form PF as of the fourth calendar quarter 2019.[12] The hour burden estimates for the condition that an unregistered money market fund comply with rule 2a–7 are based on the burden hours included in the Commission's 2019 PRA extension regarding rule 2a–7.[13] However, we have updated the estimated costs associated using the following methodology:

- *For professional personnel:* SIFMA's *Management & Professional Earnings in the Securities Industry 2013,* modified for 2020 by Commission staff to account for an 1,800-hour work-year and inflation, and multiplied by 5.35 to account for bonuses, firm size, employee benefits, and overhead;
- *For a fund board of directors:* SIFMA data does not include a board of directors. For board time, Commission staff currently uses a cost of $4,770 per hour, which was last adjusted for inflation in 2019. This estimate assumes an average of nine board members per year; and
- *For clerical personnel:* SIFMA's *Office Salaries in the Securities Industry 2013,* modified for 2020 by Commission staff to account for an 1,800-hour work-year and inflation, and multiplied by 2.93 to account for bonuses, firm size, employee benefits, and overhead.

The estimated burden of information collection for rule 2a–7 is set forth in Table 1 below. We use these estimated burdens for registered money market funds to extrapolate the information collection burdens for unregistered money market funds under rule 12d1–1 in Table 2 below.

BILLING CODE 8011–01–P

[9] *See* 17 CFR 270.2a–7.

[10] *See* 15 U.S.C. 80a–17(a), 15 U.S.C. 80a–17(d), 15 U.S.C. 80a–17(e), 15 U.S.C. 80a–18, 15 U.S.C. 80a–22(e).

[11] *See* 17 CFR 270.31a–1(b)(1), 17 CFR 270.31a–1(b)(2)(ii), 17 CFR 270.31a–1(b)(2)(iv), 17 CFR 270.31a–1(b)(9).

[12] *See* the U.S. Securities and Exchange Commission's Division of Investment Management—Analytics Office Private Funds Statistics, Fourth Calendar Quarter (Oct. 2, 2020) available at *https://www.sec.gov/divisions/investment/private-funds-statistics/private-funds-statistics-2019-q4.pdf.*

[13] *See* Securities and Exchange Commission, Request for OMB Approval of Extension for Approved Collection for Rule 2a–7 under the Investment Company Act of 1940 (OMB Control No. 3235–0268) (approved May 28, 2019) (the ''2019 rule 2a–7 PRA extension''). The 2019 rule 2a–7 PRA extension was the most recent rule 2a–7 submission that includes certain estimates with respect to aggregate annual hour and cost burdens for collections of information for registered money market funds.

Table 1: Rule 2a-7 burden of information collection for registered money market funds[14]

	Estimated Responses	Estimated Burden Hours	Estimated Cost Burden
Record of credit risk analyses, and determination regarding adjustable rate securities, asset backed securities, securities subject to a demand feature or guarantee, and counterparties to repurchase agreements			
	85 responses annually for each of 433 funds[15]	680 burden hours of professional (business analyst or portfolio manager) time per fund x 433	$232 per hour (intermediate business analyst) + $332 per hour (senior portfolio manager) $564 ÷ 2 = $282 median weighted average per hour of professional time $282 x 294,440 (hours) =

[14] The estimated responses and hour burdens shown in this chart were included in the Securities and Exchange Commission, Request for OMB Approval of Extension for Approved Collection for Rule 2a–7 under the Investment Company Act of 1940 (OMB Control No. 3235–0268) (approved May 28, 2019) (the ''2019 rule 2aa–7 PRA extension''). The 2019 rule 2aa–7 PRA extension was the most recent rule 2a–7 submission that includes certain estimates with respect to aggregate annual hour and cost burdens for collections of information for registered money market funds.

However, the cost burdens shown in this chart have been updated. The cost burdens for professional personnel are based on SIFMA's *Management & Professional Earnings in the Securities Industry 2013,* modified for 2020 by the Commission staff to account for an 1,800-hour work-year and inflation, and multiplied by 5.35 to account for bonuses, firm size, employee benefits and overhead and the cost burdens for clerical personnel are based on SIFMA's Office Salaries in *the Securities Industry 2013,* modified for 2020 by Commission staff to account for an 1,800-hour work-year and inflation, and multiplied by 2.93 to account for bonuses, firm size, employee benefits and overhead. However, SIFMA data does not include a board of directors. For board time, Commission staff currently uses a cost of $4,770 per hour, which was last adjusted for inflation in 2019. This estimate assumes an average of nine board members per year.

[15] The number of funds based on Form N–MFP filings for the month ended September 30, 2018 and used in the 2019 rule 2a–7 PRA extension.

[16] For purposes of the 2019 rule 2a–7 PRA extension, we assumed that on average 25% (433 funds × .25 = 108 funds) of money market funds would review and update their procedures on annual basis).

[17] We have not amortized the one-time hour and cost burdens figures associated with new funds, because we estimated there would be 10 new funds each year. Therefore, the burden would occur each year instead of occurring over a three-year period. We have done this throughout this PRA.

[18] Commission staff estimates that there are 91 fund complexes subject to rule 2a–7. This estimate is based on Form N–MEP filings with the Commission for the month ended September 30, 2018.

[19] We estimated that approximately two new money market funds would seek to qualify as retail money market funds under rule 2a–7 and therefore be required to adopt written policies and procedures reasonably designed to limit beneficial owners to natural persons.

For purposes of the 2019 rule 2a–7 PRA extension, Form N–MFP data reflects that of the 30 new money market funds created between April of 2015 through September 2018, only six new money market funds elected to be retail funds—or approximately two per year ((6 funds/42 months) × 12 months). Based on these figures, we estimated that two new money market fund per year would elect to be a retail fund.

	Estimated Responses	Estimated Burden Hours	Estimated Cost Burden
Total	**36,805 estimated responses annually**	**294,440 estimated burden hours**	**$83,032,080 estimated cost burden**
Fund's website disclosures including portfolio holding information, daily and weekly liquid assets, net flow, daily current NAV, financial support received by the fund, the imposition and removal of liquidity fees, and the suspension and resumption of fund redemptions			
	Disclosure of Portfolio Information 12 months x 433 funds = 5,196 responses per year	*Disclosure of Portfolio Information* 12 hours (webmaster) annually x 433 funds = 5,196 hours per year + 24 hours (webmaster) initial burden for each new fund x 10 new funds = 240 one-time hours = **5,436** annual aggregate one-time and recurring burdens for the disclosure of portfolio holdings information	*Disclosure of Portfolio Information* 5,196 hours for 433 funds x $250 (per hour for a webmaster) =$1,299,000 (for recurring internal burden labor costs) + 240 hours for 10 new funds x $250 (per hour for a webmaster) = $60,000 = **$1,359,000** aggregate annual one-time and recurring labor burdens for disclosure of portfolio information
	Disclosure of Daily and Weekly Liquid Assets and Net Shareholder Flow 252 business days x 433 funds = 109,116 responses per year	*Disclosure of Daily and Weekly Liquid Assets and Net Shareholder Flow* 31.5 hours (senior systems analyst/senior programmer) + 4.5 hours (compliance manager/compliance attorney) = 36 hours x 433 funds = 15,588 hours per year +	*Disclosure of Daily and Weekly Liquid Assets and Net Shareholder Flow* 31.5 hours x $311 (blended rate for a senior systems analyst ($287) and senior programmer ($334) = $9,797 (per fund) + 4.5 hours x $340 (blended rate for a compliance manager ($312) and a compliance attorney ($368)) = $1,530 = $11,327 (per fund to update the depiction of daily and weekly liquid assets and the fund's net inflow or outflow on the fund's website each

	Estimated Responses	Estimated Burden Hours	Estimated Cost Burden
		70 hours (blended time for a compliance manager and a compliance attorney) x 10 new funds = 700 one-time hours =	business day during that year) x 433 funds =$4,904,591 + 700 hours (aggregate total one-time burden for 10 new funds) x [20 hours x $340 (blended rate for a compliance manager ($312) and a compliance attorney ($368))= $6,800 + 50 hours x $311 (blended rate for a senior systems analyst ($287) and senior programmer ($334) =$15,550 = $22,350 (internal labor cost burden for each new funds)]= $223,500
		16,288 aggregate annual one-time and recurring burden hours for disclosure of daily and weekly liquid assets and shareholder flow	**$5,128,091** aggregate annual one-time and recurring burdens for disclosure of daily and weekly liquid assets and shareholder flow
	Disclosure of Daily Current NAV 252 business days x 433 funds = 109,116 responses per year	*Disclosure of Daily Current NAV* 32 hours (senior systems analyst/senior programmer) x 433 funds = 13,856 hours per year + 70 hours x 10 new funds = 700 one-time hours = **14,556** aggregate annual one-time and recurring burden hours for the disclosure of daily current NAV	*Disclosure of Daily Current NAV* 32 hours x $311 (blended rate for a senior systems analyst ($287) and senior programmer ($334) = $9,952 (annual ongoing internal labor cost burden per fund) x 433 funds = $4,309,216 (ongoing annual burden) + 700 hours (aggregate total one-time burden for 10 new funds) x [20 hours x $340 (blended rate for compliance manager ($312) and a compliance attorney ($368))=$6,800 + 50 hours x $311 (blended rate for a senior systems analyst ($287) and senior programmer ($334) = $15,550 $22,350 per fund x 10 new funds = $223,500 (total one-time cost burden)] =

	Estimated Responses	Estimated Burden Hours	Estimated Cost Burden
			$4,532,716 aggregate annual one-time and recurring labor burdens for disclosure of daily and current NAV
	Disclosure of Financial Support Received by the Fund, the Imposition and Removal of Liquidity Fees, and the Suspension and Resumption of Fund Redemptions 11 responses per year	*Disclosure of Financial Support Received by the Fund, the Imposition and Removal of Liquidity Fees, and the Suspension and Resumption of Fund Redemptions* 1 additional burden hour each time a fund updates its website to include new disclosure about the provision of financial support to fund x 10 reports per year = 10 hours per year + 1 burden hour for website updates x 1 estimated instance of a fund updating its website regarding the imposition and removal of liquidity fees, and suspension and resumption of fund redemptions = 1 hour per year = **11** aggregate annual one-time and recurring burden for the disclosure of financial support received by the fund, the imposition and removal of liquidity fees, and the suspension and resumption of fund redemptions	*Disclosure of Financial Support Received by the Fund, the Imposition and Removal of Liquidity Fees, and the Suspension and Resumption of Fund Redemptions* 10 reports per fund x 1 hour per website update x $250 per hour for a webmaster (internal cost burden per fund to include new disclosure) = $2,500 (aggregate internal labor cost burden for disclosure of financial support provided to funds) + 1 hour (annual aggregate burden) x $250 per hour for a webmaster = $250 (aggregate internal labor cost burden) = **$2,750** aggregate annual one-time and recurring burden for the disclosure of financial support received by the fund, the imposition and removal of liquidity fees, and the suspension and resumption of fund redemptions
	Total Estimated Responses Relating to Website Disclosure 5,196 +109,116 + 109,116 +11 =	*Total Estimated Burden Hours Relating to Website Disclosure* 5,436 + 16,288 + 14,556 + 11 =	*Total Estimated Cost Burden Relating to Website Disclosure* $1,359,000 + $5,128,091 + $4,532,716 + $2,750 =

	Estimated Responses	Estimated Burden Hours	Estimated Cost Burden
TOTAL	**223,439 estimated responses annually**	**36,291 estimated burden hours**	**$11,022,557 estimated cost burden**
Board review of procedures and guidelines of any investment adviser or officers to whom the fund's board has delegated responsibility under rule 2a-7 and amendment of such procedures and guidelines			
	1 response annually for each of 108 funds[16]	1 hour (board time) + 4 hours (compliance and professional legal time) = 5 hours per fund 5 hours x 108 estimated responses =	1 hour x $4770 (board time) = $4,770 4 x $340 (blended rate for compliance manager ($312) and a compliance attorney ($368)) = $1,360 $4,770+ $1,360 = $6,130 (cost per fund) $6,130 x 108 estimated responses =
Total	**108 estimated responses annually**	**540 estimated burden hours**	**$662,040 estimated cost burden**
Review, revise, and approve written procedures to stress test a fund's portfolio			
	1 response annually[17] for each of 91 fund complexes[18]	1 hour of board time 5 hours of senior portfolio manager time 3 hours of risk management specialist time	1 hour x $4,770 (board time) = $4,770 5 x $332 (Sr. portfolio manager) = $1,660

	Estimated Responses	Estimated Burden Hours	Estimated Cost Burden
		+ 3 hours of professional legal time = 12 burden hours per fund complex 12 hours x 91estimated responses =	3 x $201 (risk management specialist) = $603 3 x $401 (attorney) = $1,203 $4,770 + $1,660+ $603+ $1,203 = $8,236 per fund complex $8,236 x 91 estimated responses =
Total	**91 estimated responses annually**	**1,092 estimated burden hours**	**$749,476 estimated cost burden**
Reports to fund boards on the results of stress testing			
	5 responses annually for each of 91 fund complexes	5 hours senior portfolio manager time 2 hours compliance manager time 2 hours professional legal time + 1 hour paralegal time = 10 hours per response 10 hours x 455 responses =	5 x $332 (sr. portfolio manager) = $1,660 2 x $312 (compliance manager) = $624 2 x $419 (attorney) = $838 1 x $219 (paralegal) = $219 $1,660 + $624 + $838 + $219 = $3,341 per response $3,341 x 455 estimated responses =
Total	**455 estimated responses annually**	**4,550 estimated burden hours**	**$1,520,155 estimated cost burden**
Retail Funds Policies and Procedures			
	2[19]	12 hours (attorney time)+ +1 hour (board time) =	12 x $419 (attorney) = $5,028

	Estimated Responses	Estimated Burden Hours	Estimated Cost Burden
		13 hours per fund 13 hours x 2 estimated responses =	1 hour x $4,770 (board time) = $4,770 $5,028 + $4,770 =$9,798 (per fund) $9,798 x 2 estimated responses =
Total	**2 estimated responses annually**	**26 estimated burden hours**	**$19,596 estimated cost burden**
Establishment of written procedures to test periodically the ability of the fund to maintain a stable NAV per share based on certain hypothetical events ("stress testing")			
	1 response annually for 10 new money market funds	3 hours board time 8 hours professional legal time 7 hours risk management specialist time + 4 hours senior risk management time = 22 hours 22 hours x 10 estimated responses =	3 hours x $4,770 (board time) = $14,310 8 hours x $419 (attorney) = $3,352 7 hours x $201 (risk management specialist) = $1,407 4 hours x $361 (sr. risk management specialist) = $1,444 $14,310 + $3,352 + $1,407 + $1,444 = $20,513 (per response) $20,513 x 10 estimated responses =
Total	**10 estimated responses annually**	**220 estimated burden hours**	**$205,130 estimated cost burden**
Establishment of written procedures designed to stabilize NAV and guidelines and procedures for board delegation of authority			
	1 response annually for 10 new funds	.5 hours of board time 7.2 hours professional legal time	.5 x hours x $4,770 (board time) =$2,385

	Estimated Responses	Estimated Burden Hours	Estimated Cost Burden
		+ 7.7 hours paralegal time = 15.5 hour per response 15.5 hours x10 estimated responses =	7.2 hours x $419 (attorney) = $3,016.80 7.7 hours x $219 (paralegal) = $1,686.30 $2,385 + $3,016.80 + $1,686.30 = $7,088.10 per response $7,088.10 x 10 estimated responses =
Total	**10 estimated responses annually**	**155 estimated burden hours**	**$70,881 estimated cost burden**
Board determination – Fees and Gates			
	2 funds per year	4 hours attorney 2 hours of board time + 1 hour of fund's compliance attorney = 7 hours per fund 7 hours x 2 funds =	4 hours x $419 (attorney) = $1,676 2 hours x $4,770 (board time) = $9,540 1 x $368 (compliance attorney) = $368 $1,676+$9,540+$368 = $11,584 estimated cost burden per fund x 2 funds
Total	**2 estimated responses annually**	**14 estimated burden hours**	**$23,168 estimated cost burden**
Written record of board determinations and actions related to failure of a security to meet certain eligibility standards or an event of default or insolvency			
	2 responses annually for 20 funds	.5 hours (professional legal time)	.5 hour x $419 (attorney) = $209.50 per response $209.50 x 40 estimated responses =
Total	**40 estimated responses annually**	**20 estimated burden hours**	**$8,380 estimated cost burden**
TOTAL ESTIMATED ANNUAL BURDEN OF INFORMATION COLLECTION FOR RULE 2a-7	**260,962 estimated responses annually**	**337,348 estimated burden hours annually**	**$97,313,463 estimated cost burden annually**

Based on the estimated burden of information collection for rule 2a–7 and Form PF filings, the estimated burden of information collection for rule 12d1–1 is set forth in Table 2 below.

Table 2: Rule 12d1-1 burden of information collection burden estimates for unregistered money market funds

	Estimated Responses	Estimated Burden Hours	Estimated Cost Burden[20]
Record of credit risk analyses, and determination regarding adjustable rate securities, asset backed securities, securities subject to a demand feature or guarantee, and counterparties to repurchase agreements			
	85 responses annually per 41 liquidity funds[21]	680 burden hours of professional (business analyst or portfolio manager) time per liquidity fund x 41 liquidity funds	$232 per hour (intermediate business analyst) + $332 per hour (senior portfolio manager) $564 ÷ 2

[20] The cost burdens shown in this chart for professional personnel are based on SIFMA's *Management & Professional Earnings in the Securities Industry 2013,* modified for 2020 by the Commission staff to account for an 1,800-hour work-year and inflation, and multiplied by 5.35 to account for bonuses, firm size, employee benefits and overhead and the cost burdens for clerical personnel are based on SIFMA's *Office Salaries in the Securities Industry 2013,* modified for 2020 by Commission staff to account for an 1,800-hour work-year and inflation, and multiplied by 2.93 to account for bonuses, firm size, employee benefits and overhead. However, SIFMA data does not include a board of directors. For board time, Commission staff currently uses a cost of $4,770 per hour, which was last adjusted for inflation in 2019. This estimate assumes an average of nine board members per year.

We use these estimated burdens for registered money market funds to extrapolate the information collection burdens for unregistered money market funds under rule 12d1–1 in this Table 2.

[21] The number of liquidity funds is based on the following: 65 × the percentage of liquidity funds that are at least partially in compliance with the risk-limiting provisions of rule 2a–7 and used in the most recent supporting statement for rule 2a–7 100 − 37.2) = 62.8%. The result (rounded up to a whole number) is 41 liquidity funds. The number of liquidity funds is based on the U.S. Securities and Exchange Commission's Division of Investment Management—Analytics Office Private Funds Statistics, Fourth Calendar Quarter (Oct. 2, 2020) available at *https://www.sec.gov/divisions/investment/private-funds-statistics/private-funds-statistics-2019-q4.pdf.*

[22] The number of new unregistered money market funds is estimated from 2018–2019 historical Form PF filings by liquidity fund advisers. *See* Securities and Exchange Commission's Division of Investment Management—Analytics Office Private Funds Statistics, Fourth Calendar Quarter (Oct. 2, 2020) available at *https://www.sec.gov/divisions/investment/private-funds-statistics/private-funds-statistics-2019-q4.pdf.*

[23] We recognize that in many cases the adviser to an unregistered money market fund typically performs the function of the fund's board. *Money Market Fund Reform; Amendments to Form PF* Investment Company Act Rel. No. 31166 (Jul. 23, 2014), 79 FR 47735, 47809 (Aug. 14, 2014).

[24] For purposes of this PRA extension, we assumed that on average 25% (41 funds × .25 = approximately 10 funds) of liquidity funds would review and update their procedures on annual basis.

[25] This number has been derived from the number of advisers to liquidity funds. *See* U.S Securities and Exchange Commission, Division of Investment Management, Analytics Office, Private Fund Statistics, Fourth Quarter 2019 (Oct. 2, 2020), Table 2.

[26] *See supra* note 23.

[27] There are no liquidity funds of this type; liquidity funds only are offered to qualified investors.

[28] *See supra* note 23.

[29] *Id.*

[30] *Id.*

[31] In the context of registered money market funds, we have previously estimated an average of approximately 2 occurrences for 20 funds each year; however, this number may vary significantly in any particular year. For purposes of this PRA extension, we assumed there would be same proportion of unregistered money market funds experiencing events of default or solvency each year. (20/433 registered money market funds = approximately 5%. 5% × 41 liquidity funds = approximately 2 liquidity funds.)

	Estimated Responses	Estimated Burden Hours	Estimated Cost Burden[20]
			= $282 median weighted average per hour x 27,880 hours =
Total	**3,485 estimated responses per liquidity fund annually**	**27,880 estimated burden hours**	**$7,862,160 estimated cost burden**
Fund's website disclosures including portfolio holding information, daily and weekly liquid assets, net shareholder flow, daily current NAV, financial support received by the fund, the imposition and removal of liquidity fees, and the suspension and resumption of fund redemptions			
	Disclosure of Portfolio Holdings Information 12 months x 41 liquidity funds = 492 responses per year	*Disclosure of Portfolio Holdings Information* 12 hours (one hour per monthly filing) to update the website to include the disclosure of portfolio holdings information x 41 liquidity funds = 492 hours per year + 24 hours of webmaster time for an estimated 1 new liquidity fund[22] each year to initially develop a webpage and provide monthly disclosure for the initial year = 24 one-time burden hours 516 aggregate annual one-time and recurring burden hours for the disclosure of portfolio holdings	*Disclosure of Portfolio Holdings Information* 492 hours for 41 liquidity funds x $250 (per hour for a webmaster) =$123,000 (for recurring internal burden labor costs) + 24 hours for 1 new liquidity fund x $250 (per hour for a webmaster) = $6,000 = **$129,000** total aggregate annual one-time and recurring labor burdens for disclosure of portfolio holdings

	Estimated Responses	Estimated Burden Hours	Estimated Cost Burden[20]
	Disclosure of Daily and Weekly Liquid Assets and Net Shareholder Flow 252 business days x 41 liquidity funds = 10,332 per year	*Disclosure of Daily and Weekly Liquid Assets and Net Shareholder Flow* 36 hours ongoing annual burden x 41 liquidity funds = 1,476 hours per year + 70 hours for each new liquidity fund x 1 new fund = 70 one-time hours 1,476 annual burden hours + 70 one-time burden hours = 1,546 aggregate annual recurring and one-time burden hours for disclosure of daily and weekly liquid assets and shareholder flow	*Disclosure of Daily and Weekly Liquid Assets and Net Shareholder Flow* 31.5 hours x $311 (blended rate for a senior systems analyst ($287) and senior programmer ($334) = $9,797 (per liquidity fund) + 4.5 hours x $340 (blended rate for compliance manager ($312) and a compliance attorney ($368)) = $1,530 = $11,327 (per fund to update the depiction of daily and weekly liquid assets and the liquidity fund's net inflow or outflow on the liquidity fund's website each business day during that year) x 41 liquidity funds = $464,407 recurring aggregate annual cost burdens for the disclosure of daily and weekly liquid assets and weekly liquid assets and the fund's net inflow or outflow on the liquidity fund's website each business day during the year + 70 hours aggregate total one-time burden for 1 new fund) x [20 hours x $340 (blended rate for compliance manager ($312) and a compliance attorney ($368))= $6,800 + 50 hours x $311 (blended rate for a senior systems analyst ($287) and senior programmer ($334) =$15,550 = $22,350 (internal labor cost burden for each new fund)]= $1,564,500 **= $2,028,907** aggregate annual recurring and one-time cost burdens for

	Estimated Responses	Estimated Burden Hours	Estimated Cost Burden[20]
			disclosure of daily and weekly liquid assets and shareholder flow
	Disclosure of Daily Current NAV 252 business days x 41 liquidity funds = 10,332 per year	*Disclosure of Daily Current NAV* 32 hours x 41 liquidity funds = 1,312 hours per year + 70 one-time burden hours for each new liquidity fund x 1 new liquidity fund = 70 one-time burden hours 1,312 annual burden hours + 70 one-time burden hours = 1,382 aggregate annual recurring and one-time burden hours for disclosure of daily current NAV	*Disclosure of Daily Current NAV* 32 hours x $311 (blended rate for a senior systems analyst ($287) and senior programmer ($334) = $9,952 (annual ongoing internal labor cost burden per fund) x 41 funds = $408,932 ongoing annual cost burdens + 70 hours (aggregate total one-time burden for 1 new liquidity fund) x [20 hours x $340 (blended rate for compliance manager ($312) and a compliance attorney ($368))= $6,800 + 50 hours x $311 (blended rate for a senior systems analyst ($287) and senior programmer ($334) = $15,550 = $22,350 (internal labor cost burden for each new fund)] = $1,564,500 $408,932 (recurring internal cost burden) + $1,564,500 (one-time internal labor cost burden) = **$1,973,432** aggregate annual recurring and one-time cost burdens
	Disclosure of Financial Support Received by the Fund, and Imposition and Removal of Liquidity Fees, and the Suspension and Resumption of Fund Redemptions Not applicable	*Disclosure of Financial Support Received by the Fund, and Imposition and Removal of Liquidity Fees, and the Suspension and Resumption of Fund Redemptions* Not applicable	*Disclosure of Financial Support Received by the Fund, and Imposition and Removal of Liquidity Fees, and the Suspension and Resumption of Fund Redemptions* Not applicable
	Total Estimated Burden Hours Relating to Website Disclosure	*Total Estimated Burden Hours Relating to Website Disclosure*	*Total Estimated Burden Hours Relating to Website Disclosure*

	Estimated Responses	Estimated Burden Hours	Estimated Cost Burden[20]
	492+10,332+10,332 =	516 + 1,546 + 1,382 + 0 +0 =	$129,000 + $2,028,907+ $1,973,432 =
TOTAL	**21,156 estimated responses**	**3,444 estimated burden hours**	**$4,131,339 estimated cost burden**
Board review of procedures and guidelines of any investment adviser or officers to whom the fund's board has delegated responsibility under rule 2a-7 and amendment of such procedures and guidelines[23]			
	1 response annually for each of 10 funds[24]	1 hour (board time) + 4 hours (compliance and professional legal time) = 5 hours 5 hours x 10 responses =	1 hour x $4770 (board time) = $4,770 4 x $340 (blended rate for compliance manager ($312) and a compliance attorney ($368)) = $1,360 $4,770+ $1,360 = $6,130 (cost per fund) $6,130 x 10 estimated responses =
TOTAL	**10 estimated responses**	**50 estimated burden hours**	**$61,300 estimated cost burden**
Review, revise, and approve written procedures to stress test a fund's portfolio			
	1 response annually for each of 36 fund complexes[25]	1 hour of board time 5 hours of senior portfolio manager time	1 hour x $4,770 (board time) = $4,770

	Estimated Responses	Estimated Burden Hours	Estimated Cost Burden[20]
		3 hours of risk management specialist time + 3 hours of professional legal time = 12 hours 12 hours x 36 estimated responses =	5 x $332 (Sr. portfolio manager) = $1,660 3 x $201 (risk management specialist) = $603 3 x $401 (attorney) = $1,203 $4,770 + $1,660+ $603+ $1,203 = $8,236 per liquidity fund complex $8,236 x 36 estimated responses =
TOTAL	**36 estimated responses**	**432 estimated burden hours**	**$296,496 estimated cost burden**
Reports to fund boards on the results of stress testing[26]			
	5 responses annually for each of 36 fund complexes	5 hours senior portfolio manager time 2 hours compliance manager time 2 hours professional legal time +1 hour paralegal time = 10 hours per response	5 x $332 (sr. portfolio manager) = $1,660 2 x $312 (compliance manager) = $624 2 x $419 (attorney) = $838 1 x $219 (paralegal) = $219 $1,660 + $624 + $838 + $219 = $3,341 per response $3,341 x 180 estimated responses =
TOTAL	**180 estimated responses**	**1800 estimated burden hours**	**$601,380 estimated cost burden**
Retail Funds Policies and Procedures[27]			
TOTAL	**Not applicable**		
Establishment of written procedures to test periodically the ability of the fund to			

	Estimated Responses	Estimated Burden Hours	Estimated Cost Burden[20]
maintain a stable NAV per share based on certain hypothetical events ("stress testing")			
	1 response annually for 1 new liquidity fund	3 hours board time 8 hours professional legal time 7 hours risk management specialist time +4 hours senior risk management time = 22 hours	3 hours x $4,770 (board time) = $14,310 8 hours x $419 (attorney) = $3,352 7 hours x $201 (risk management specialist) = $1,407 4 hours x $361 (sr. risk management specialist) = $1,444 $14,310 + $3,352 + $1,407 + $1,444 = $20,513 (per response) $20,513(cost) x 1 estimated response
TOTAL	**1 estimated response**	**22 estimated burden hours**	**$20,513 estimated cost burden**
Establishment of written procedures designed to stabilize NAV and guidelines and procedures for board delegation of authority[28]			
	1 response annually for 1 new liquidity fund	.5 hours board time 7.2 hours professional legal time +7.8 hours paralegal time = 15.5 hours	.5 hours x $4,770 (board time) = $2,385 7.2 hours x $419 (attorney) = $3,016.80 7.8 hours x $219 (paralegal) = $1,708.20 $2,385 + $3,016.80+ $1,708.20 = $7,110 (per response) $7,110 x 1 estimated response =
TOTAL	**1 estimated response**	**15.5 estimated burden hours**	**$7,110 estimated cost burden**
Board determination – Fees and Gates[29]			

	Estimated Responses	Estimated Burden Hours	Estimated Cost Burden[20]
	2 liquidity funds per year	4 hours attorney 2 hours of board time +1 hours of fund's compliance attorney 7 hours per liquidity fund 7 hours x 2 estimated responses =	4 hours x $419 (attorney) = $1,676 2 hours x $4,770 (board time) = $9,540 1 x $368 (compliance attorney) = $368 $1,676+$9,540+$368 = $11,584 per liquidity fund $11,584 x 2 estimated responses =
TOTAL	**2 estimated responses**	**14 estimated hours burden**	**$23,168 estimated costs burden**
Written record of board determinations and actions related to failure of a security to meet certain eligibility standards or an event of default or insolvency[30]			
	2 estimated responses annually for 2 liquidity funds[31]	.5 hours (professional legal time) x 4 responses	.5 hour x $419 (attorney) = $209.50 $209.50 x 4 estimated responses =
Total	**4 estimated responses**	**2 estimated burden hours**	**$838 estimated cost burden**
TOTAL ESTIMATED BURDEN OF INFORMATION COLLECTION FOR RULE 12d1-1	**24,875 estimated responses annually**	**33,660 estimated burden hours annually**	**$13,004,304 estimated cost burden annually**

Commission staff estimates that in addition to the costs described in Table 2 above, unregistered money market funds will incur costs to preserve records, as required under rule 2a–7. These costs will vary significantly for individual funds, depending on the amount of assets under fund management and whether the fund preserves its records in a storage facility in hard copy or has developed and maintains a computer system to create and preserve compliance records. In the 2019 rule 2a–7 PRA extension, Commission staff estimated that the amount an individual money market fund may spend ranges from $100 per year to $300,000. We have no reason to believe the range is different for unregistered money market funds. Based on Form PF data as of the fourth calendar quarter 2019, liquidity funds have $294 billion in gross asset value.[32] The Commission does not have specific information about the proportion of assets held in small, medium-sized, or large unregistered money market funds. Because liquidity funds are often used as cash management vehicles, the staff estimates that each private liquidity fund is a ''large'' fund (*i.e.,* more than $1 billion in assets under management). Based on a cost of $0.0000009 per dollar of assets under management (for large funds),[33] the staff estimates compliance with rule 2a–7 for these unregistered money market funds totals $264,600 annually.[34]

Consistent with estimates made in the rule 2a–7 submission, Commission staff estimates that unregistered money market funds also incur capital costs to create computer programs for maintaining and preserving compliance records for rule 2a–7 of $0.0000132 per dollar of assets under management. Based on the assets under management figures described above, staff estimates

[32] *See* U.S Securities and Exchange Commission, Division of Investment Management, Analytics Office, Private Fund Statistics, Fourth Quarter 2019 (Oct. 2, 2020), Table 3.

[33] The recordkeeping cost estimates are $0.0051295 per dollar of assets under management for small funds, and $0.0005041 per dollar of assets under management for medium-sized funds. The cost estimates are the same as those used in the most recently approved rule 2a–7 submission.

[34] This estimate is based on the following calculation: ($294 billion × $0.0000009) = $264,600 for large funds.

annual capital costs for all unregistered money market funds of $3.88 million.[35]

Commission staff further estimates that, even absent the requirements of rule 2a–7, money market funds would spend at least half of the amounts described above for record preservation ($132,300) and for capital costs ($1.94 million). Commission staff concludes that the aggregate annual costs of compliance with the rule are $132,300 for record preservation and $1.94 million for capital costs.

The collections of information required for unregistered money market funds by rule 12d1–1 are necessary in order for acquiring funds to be able to obtain the benefits described above. Notices to the Commission will not be kept confidential. An agency may not conduct or sponsor, and a person is not required to respond to, a collection of information unless it displays a currently valid control number.

Written comments are invited on: (a) Whether the proposed collection of information is necessary for the proper performance of the functions of the agency, including whether the information will have practical utility; (b) the accuracy of the agency's estimate of the burden of the collection of information; (c) ways to enhance the quality, utility, and clarity of the information collected; and (d) ways to minimize the burden of the collection of information on respondents, including through the use of automated collection techniques or other forms of information technology. Consideration will be given to comments and suggestions submitted in writing within 60 days of this publication.

Please direct your written comments to David Bottom, Director/Chief Information Officer, Securities and Exchange Commission, 100 F Street NE, Washington, DC 20549; or send an email to: *PRA_Mailbox@sec.gov.*

Dated: March 22, 2021.

J. Matthew DeLesDernier,

Assistant Secretary.

[FR Doc. 2021–06243 Filed 3–25–21; 8:45 am]

BILLING CODE 8011–01–C

[35] This estimate is based on the following calculation: ($294 billion × 0.0000132) = $3.88 million.

SECURITIES AND EXCHANGE COMMISSION

[Release No. 34–91383; File No. SR–CFE–2021–006]

Self-Regulatory Organizations; Cboe Futures Exchange, LLC; Notice of a Filing of a Proposed Rule Change Regarding Disruptive Trading Practices

March 22, 2021.

Pursuant to Section 19(b)(7) of the Securities Exchange Act of 1934 (''Act''),[1] notice is hereby given that on March 15, 2021 Cboe Futures Exchange, LLC (''CFE'' or ''Exchange'') filed with the Securities and Exchange Commission (''Commission'') the proposed rule change described in Items I, II, and III below, which Items have been prepared by CFE. The Commission is publishing this notice to solicit comments on the proposed rule change from interested persons. CFE also has filed this proposed rule change with the Commodity Futures Trading Commission (''CFTC''). CFE filed a written certification with the CFTC under Section 5c(c) of the Commodity Exchange Act (''CEA'') [2] on March 15, 2021.

I. Self-Regulatory Organization's Description of the Proposed Rule Change

The Exchange proposes to provide additional guidance in its rules regarding prohibited disruptive practices.

The rule amendments included as part of this proposed rule change are to apply to all products traded on CFE, including both non-security futures and any security futures that may be listed for trading on CFE. The scope of this filing is limited solely to the application of the proposed rule change to security futures that may be traded on CFE. Although no security futures are currently listed for trading on CFE, CFE may list security futures for trading in the future.

The text of the proposed rule change is attached as Exhibit 4 to the filing but is not attached to the publication of this notice.

II. Self-Regulatory Organization's Statement of the Purpose of, and Statutory Basis for, the Proposed Rule Change

In its filing with the Commission, CFE included statements concerning the purpose of and basis for the proposed rule change and discussed any comments it received on the proposed rule change. The text of these statements may be examined at the places specified in Item IV below. CFE has prepared summaries, set forth in Sections A, B, and C below, of the most significant aspects of such statements.

A. Self-Regulatory Organization's Statement of the Purpose of, and Statutory Basis for, the Proposed Rule Change

1. Purpose

CFE Rule 620 (Disruptive Practices) prohibits various disruptive practices and CFE Policy and Procedure XVIII (Disruptive Trading Practices) (''P&P XVIII'') of the Policies and Procedures section of the CFE Rulebook lists various factors that CFE may consider in assessing whether conduct violates Rule 620. The proposed rule change proposes to make the following clarifying updates in relation to these provisions.

CFE is proposing to amend the provisions of Rule 620 in the following manner.

Rule 620(b)(iii) currently provides that no Person shall enter or cause to be entered an actionable or non-actionable message or messages with intent to overload, delay, or disrupt the systems of the Exchange or other market participants. CFE proposes to add a new subparagraph (b)(iv) to Rule 620 to address disruption to the systems of the Exchange or market participants in this context and accordingly proposes to remove reference to disruption from Rule 620(b)(iii).

Specifically, proposed revised Rule 620(b)(iii) will provide that no Person shall enter or cause to be entered an actionable or non-actionable message(s) with intent to overload or delay the systems of the Exchange or other market participants.

Proposed new Rule 620(b)(iv) will provide that no Person shall intentionally or recklessly submit or cause to be submitted an actionable or non-actionable message(s) that has the potential to disrupt the systems of the Exchange or other market participants.

CFE also proposes to make the following two non-substantive changes to Rule 620(b): (1) To change the numbering of current subparagraph (b)(iv) of Rule 620 to subparagraph (b)(v) of Rule 620 to account for the addition of proposed new Rule 620(b)(iv) and (2) to revise Rule 620(b)(ii), Rule 620(b)(iii), and renumbered Rule 620(b)(v) to use the same wording when referring to an actionable or non-actionable message(s) and thus to provide for consistent language in relation to these references throughout Rule 620(b).

[1] 15 U.S.C. 78s(b)(7).

[2] 7 U.S.C. 7a–2(c).

CFE is also proposing to amend the provisions of P&P XVIII in the following manner.

CFE proposes to revise Section A of P&P XVIII to specifically reference an additional factor that the Exchange may consider in assessing whether conduct violates Rule 620. Section A of P&P XVIII enumerates a non-exclusive list of factors that the Exchange may consider in assessing whether conduct violates Rule 620. CFE proposes to revise Section A of P&P XVIII to specifically provide that the Exchange may consider industry best practices regarding the design, testing, implementation, operation, change management, monitoring, and documentation of automated trading systems in assessing whether conduct violates Rule 620.

CFE proposes to update Section J of P&P XVIII to reference additional examples of non-actionable messages. Currently, Section J of P&P XVIII lists a heartbeat message transmitted to CFE's trading system (''CFE System'') as a non-actionable message. CFE proposes to revise Section J of P&P XVIII to list the entry of Orders in test products and network packets that are incomplete, partial, corrupt, or otherwise unable to be processed by the Exchange as additional examples of non-actionable messages.

CFE proposes to add new Section U to P&P XVIII to specifically reference two examples of practices that are prohibited by new Rule 620(b)(iv). In particular, CFE proposes to add new Section U of P&P XVIII, which will provide that (1) engaging in a pattern and practice of submitting partial messages for the purpose of seeking to reduce latency has the potential to disrupt the systems of the Exchange; (2) purposefully corrupting or constructing malformed data packets also has the potential to disrupt the systems of the Exchange; and (3) the Exchange considers any market participant engaging in either of these practices as part of a trading strategy to have recklessly disregarded the potential to disrupt the systems of the Exchange in violation of new Rule 620(b)(iv).

CFE proposes to add these provisions to make clear that intentionally submitting partial order messages for the purpose of seeking to reduce latency only to complete the order message upon the happening of an event or trading signal is prohibited activity. Similarly, these provisions are intended to make clear that purposefully corrupting or constructing malformed data packets as part of a trading strategy to reduce latency is also prohibited activity. These strategies have the potential to impact the systems of the Exchange, and the Exchange believes they serve no useful purpose.

CFE proposes to add new Section V to P&P XVIII to make clear that brokers and execution clerks are obligated to consider market conditions when executing an order on behalf of a customer or employer pursuant to their instructions and that the instructions of a customer or employer do not negate the obligation for brokers and execution clerks to comply with Rule 620. In connection with the addition of new Section V to P&P XVIII, CFE proposes to amend P&P XVIII to change the lettering of current Section U to new Section W of P&P XVIII and of current Section V to new Section X of P&P XVIII to account for the addition of proposed new Section V to P&P XVIII.

Finally, CFE proposes to amend new Section X of P&P XVIII to add two examples of prohibited activity under Rule 620. In particular, this Section of P&P XVIII includes a non-exhaustive list of various examples of conduct that may be found to violate Rule 620. The proposed additional examples in new Section X of P&P XVIII provide specific illustrations of trading strategies that may violate Rule 620, including the provisions of new Rule 620(b)(iv), which involve purposefully corrupting or constructing malformed data packets.

The first proposed example includes the following fact pattern: A market participant engages in a trading strategy where the market participant's trading system is designed to purposefully corrupt data sent across one or more physical connections to the Exchange. For example, prior to the occurrence of an event or signal, the market participant's trading system begins transmitting to the Exchange data necessary for an order message (*e.g.,* Ethernet frame; Internet Protocol (IP) packet; Transmission Control Protocol (TCP) packet; etc.). The trading system is designed so that if the event or signal does not occur as expected, the trading system will corrupt the partially transmitted data, for instance by invalidating the Frame Check Sequence (FCS) checksum causing the packet or Ethernet frame to be dropped by a network switch or receiving device at the logical or physical entry point to the CFE System. If the event does occur as expected, the trading system will complete the partially transmitted data so that an order message from the trading system is able to reach the Exchange trading platform.

The second proposed example includes the following fact pattern: A market participant engages in a trading strategy where the market participant's trading system is designed to purposefully send to the Exchange untradeable orders or orders that have no reasonable probability of trading. For example, prior to the occurrence of an event or signal, the market participant's trading system begins transmitting to the Exchange data necessary for an order message (*e.g.,* Ethernet frame; TCP packet; etc.). The trading system is designed so that if the event or signal does not occur as expected, the trading system will complete the partially transmitted data and successfully submit an order message to the Exchange. However, because the event or signal did not occur as expected, the trading system is designed to render the completed order message untradeable or improbable of trading. This may be accomplished, for example, by submitting the order message as a fill or kill order type with a price or quantity that causes the order to immediately be cancelled by the trading platform. This may also be accomplished, for example, by submitting the order message at an off-market price, deep in the order book, and intending to cancel that order prior to execution.

The proposed rule change is consistent with similar updated guidance provided by other designated contract markets (''DCMs'') regarding disruptive practices.[3] The Exchange believes that aligning its guidance regarding disruptive trading practices across DCMs where appropriate protects the Exchange, investors, and the public interest by promoting uniform expectations among market participants regarding disruptive trade practices.

2. Statutory Basis

The Exchange believes that the proposed rule change is consistent with Section 6(b) of the Act,[4] in general, and furthers the objectives of Sections 6(b)(1)[5] and 6(b)(5)[6] in particular, in that it is designed:

- To enable the Exchange to enforce compliance by its Trading Privilege Holders and persons associated with its Trading Privilege Holders with the provisions of the rules of the Exchange,
- to prevent fraudulent and manipulative acts and practices,

[3] These DCMs are Chicago Mercantile Exchange, Inc. (''CME''), The Board of Trade of the City of Chicago, Inc., New York Mercantile Exchange, Inc., and Commodity Exchange, Inc. Each submitted rule certification filings to the CFTC to effectuate their respective updated guidance. See, *e.g.,* CME Submission No. 20–305 (July 24, 2020), which is available on the CFTC website at: *https://www.cftc.gov/sites/default/files/filings/orgrules/20/07/rule072420cmedcm003.pdf.*

[4] 15 U.S.C. 78f(b).

[5] 15 U.S.C. 78f(b)(1).

[6] 15 U.S.C. 78f(b)(5).

• to promote just and equitable principles of trade,

• to remove impediments to and perfect the mechanism of a free and open market and a national market system,

• and in general, to protect investors and the public interest.

The proposed rule change provides additional guidance regarding disruptive practices that violate CFE Rule 620. CFE considers the disruptive trading practices addressed by the proposed rule change to be prohibited by existing CFE rules, including current Rule 620, P&P XVIII, and CFE Rule 608 (Acts Detrimental to the Exchange, Acts Inconsistent with Just and Equitable Principles of Trade; Abusive Practices). CFE also considers the provisions that are proposed to be added to P&P XVIII relating to factors that the Exchange may consider in assessing whether conduct violates Rule 620 and relating to the obligation of brokers to consider market conditions when executing orders to be within the scope of existing CFE rules, including current Rule 620 and P&P XVIII. Although this is the case, CFE believes that it is beneficial to provide additional guidance to market participants through the inclusion of further detail in CFE's rules regarding prohibited disruptive practices. By further describing prohibited disruptive trading practices in CFE's rules and by providing additional guidance relating to the application of CFE's rule provisions with respect to disruptive trading practices, the proposed changes to Rule 620 and P&P XVIII contribute to the protection of CFE's market and market participants from abusive practices; to the promotion of fair and equitable trading on CFE's market; and to precluding activity on CFE's market that is disruptive to the orderly execution of transactions and that may negatively impact the systems of the Exchange.

Accordingly, the Exchange believes that the proposed rule change will benefit market participants because it will provide greater clarity regarding the Exchange's current prohibited disruptive trading practices and the various factors that CFE may consider in assessing whether conduct violates Rule 620. Additionally, the Exchange believes that the proposed rule change will strengthen its ability to carry out its responsibilities as a self-regulatory organization by providing further guidance regarding the type of activity that is prohibited under CFE Rule 620. In addition, the proposed rule change benefits market participants by contributing to the protection of CFE's market and market participants from abusive practices and to the promotion of a fair and orderly market.

The Exchange also believes that the proposed rule change is equitable and not unfairly discriminatory in that the rule amendments included in the proposed rule change would apply equally to all market participants.

B. Self-Regulatory Organization's Statement on Burden on Competition

CFE does not believe that the proposed rule changes will impose any burden on competition not necessary or appropriate in furtherance of the purposes of the Act. Specifically, the Exchange believes that the proposed rule change will not burden intra-market competition because the clarifying updates to the prohibited disruptive trading practices will apply equally to all market participants. The Exchange also believes that these clarifying updates will help to foster a fair and orderly market and contribute to furthering the promotion of fair and equitable trading on the Exchange. Additionally, the proposed rule change is designed to make CFE's disruptive trading practice rules consistent with the existing rules and guidance published by other DCMs and thus will not burden intermarket competition.

C. Self-Regulatory Organization's Statement on Comments on the Proposed Rule Change Received From Members, Participants, or Others

No written comments were solicited or received with respect to the proposed rule change.

III. Date of Effectiveness of the Proposed Rule Change and Timing for Commission Action

The proposed rule change will become operative on March 29, 2021. At any time within 60 days of the date of effectiveness of the proposed rule change, the Commission, after consultation with the CFTC, may summarily abrogate the proposed rule change and require that the proposed rule change be refiled in accordance with the provisions of Section 19(b)(1) of the Act.[7]

IV. Solicitation of Comments

Interested persons are invited to submit written data, views, and arguments concerning the foregoing, including whether the proposed rule change is consistent with the Act. Comments may be submitted by any of the following methods:

Electronic Comments

• Use the Commission's internet comment form (*http://www.sec.gov/rules/sro.shtml*); or

• Send an email to *rule-comments@sec.gov.* Please include File Number SR–CFE–2021–006 on the subject line.

Paper Comments

• Send paper comments in triplicate to Secretary, Securities and Exchange Commission, 100 F Street NE, Washington, DC 20549–1090.

All submissions should refer to File Number SR–CFE–2021–006. This file number should be included on the subject line if email is used. To help the Commission process and review your comments more efficiently, please use only one method. The Commission will post all comments on the Commission's internet website (*http://www.sec.gov/rules/sro.shtml*). Copies of the submission, all subsequent amendments, all written statements with respect to the proposed rule change that are filed with the Commission, and all written communications relating to the proposed rule change between the Commission and any person, other than those that may be withheld from the public in accordance with the provisions of 5 U.S.C. 552, will be available for website viewing and printing in the Commission's Public Reference Room, 100 F Street NE, Washington, DC 20549, on official business days between the hours of 10:00 a.m. and 3:00 p.m. Copies of the filing also will be available for inspection and copying at the principal office of the Exchange. All comments received will be posted without change. Persons submitting comments are cautioned that we do not redact or edit personal identifying information from comment submissions. You should submit only information that you wish to make available publicly. All submissions should refer to File Number SR–CFE–2021–006, and should be submitted on or before April 16, 2021.

For the Commission, by the Division of Trading and Markets, pursuant to delegated authority.[8]

J. Matthew DeLesDernier,

Assistant Secretary.

[FR Doc. 2021–06233 Filed 3–25–21; 8:45 am]

BILLING CODE 8011–01–P

[7] 15 U.S.C. 78s(b)(1).

[8] 17 CFR 200.30–3(a)(73).

SECURITIES AND EXCHANGE COMMISSION

[SEC File No. 270–428, OMB Control No. 3235–0478]

Proposed Collection; Comment Request

Upon Written Request, Copies Available From: Securities and Exchange Commission, Office of FOIA Services, 100 F Street NE, Washington, DC 20549–2736

Extension:
Rule 11a1–1(T)

Notice is hereby given that pursuant to the Paperwork Reduction Act of 1995 (''PRA'') (44 U.S.C. 3501 *et seq.*), the Securities and Exchange Commission (''Commission'') is soliciting comments on the existing collection of information provided for in Rule 11a1–1(T) (17 CFR 240.11a1–1(T)), under the Securities Exchange Act of 1934 (15 U.S.C. 78a *et seq.*) (''Exchange Act''). The Commission plans to submit this existing collection of information to the Office of Management and Budget (''OMB'') for extension and approval.

On January 27, 1976, the Commission adopted Rule 11a1–1(T)—Transactions Yielding Priority, Parity, and Precedence (17 CFR 240.11a1–1(T)) under the Exchange Act (15 U.S.C. 78a *et seq.*) to exempt certain transactions of exchange members for their own accounts that would otherwise be prohibited under Section 11(a) of the Exchange Act. The Rule provides that a member's proprietary order may be executed on the exchange of which the trader is a member, if, among other things: (1) The member discloses that a bid or offer for its account is for its account to any member with whom such bid or offer is placed or to whom it is communicated; (2) any such member through whom that bid or offer is communicated discloses to others participating in effecting the order that it is for the account of a member; and (3) immediately before executing the order, a member (other than a specialist in such security) presenting any order for the account of a member on the exchange clearly announces or otherwise indicates to the specialist and to other members then present that he is presenting an order for the account of a member.

Without these requirements, it would not be possible for the Commission to monitor its mandate under the Exchange Act to promote fair and orderly markets and ensure that exchange members have, as the principle purpose of their exchange memberships, the conduct of a public securities business.

There are approximately 538 respondents that require an aggregate total of approximately 15 hours per year to comply with this Rule. Each of these approximately 538 respondents makes an estimated 20 annual responses, for an aggregate of 10,760 responses per year. Each response takes approximately 5 seconds to complete. Thus, the total compliance burden per year is approximately 15 hours (10,760 × 5 seconds/60 seconds per minute/60 minutes per hour = 15 hours). The approximate internal cost of compliance per hour is approximately $355, resulting in a total internal cost of compliance of approximately $5,325 per year (15 hours @ $355).

Written comments are invited on: (a) Whether the proposed collection of information is necessary for the proper performance of the functions of the Commission, including whether the information will have practical utility; (b) the accuracy of the Commission's estimates of the burden of the proposed collection of information; (c) ways to enhance the quality, utility, and clarity of the information collected; and (d) ways to minimize the burden of the collection of information on respondents, including through the use of automated collection techniques or other forms of information technology. Consideration will be given to comments and suggestions submitted in writing within 60 days of this publication.

An agency may not conduct or sponsor, and a person is not required to respond to, a collection of information under the PRA unless it displays a currently valid OMB control number.

Please direct your written comments to: David Bottom, Director/Chief Information Officer, Securities and Exchange Commission, c/o Cynthia Roscoe, 100 F Street NE, Washington, DC 20549, or send an email to: *PRA_Mailbox@sec.gov.*

Dated: March 22, 2021.

J. Matthew DeLesDernier,

Assistant Secretary.

[FR Doc. 2021–06241 Filed 3–25–21; 8:45 am]

BILLING CODE 8011–01–P

SMALL BUSINESS ADMINISTRATION

Applications for New Awards; Shuttered Venue Operators Grants (SVOG)

AGENCY: U.S. Small Business Administration.

ACTION: Notice of funding opportunity.

SUMMARY: The U.S. Small Business Administration (SBA) issues a notice inviting applications for new awards for fiscal year (FY) 2021 for SVOG, Catalog of Federal Domestic Assistance (CFDA) number 59.075. This notice relates to the approved information collection under OMB control number 4040–0004.

DATES:

Applications Available: April 8, 2021.

Deadline for Transmittal of Applications: The SBA will receive and process applications on a rolling basis, and submission will remain available until funds become exhausted.

Pre-application webinar information: The SBA held a pre-application meeting, via webinar, for prospective applicants on January 14, 2021, Eastern time. The webinar is available for viewing at *https://www.youtube.com/watch?v=PdfQGb6z-gg.*

The SBA will hold a second webinar on March 30, 2021 and will make information available on the webinar at *www.sba.gov/svogrant.*

ADDRESSES: The SBA will only accept applications submitted electronically through the SBA's website via the following link: *www.sba.gov/svogrant.*

FOR FURTHER INFORMATION CONTACT: Barbara E. Carson, U.S. Small Business Administration, 409 Third Street SW, Washington, DC 20416. Telephone: (800) 659–2955. Email: *SVOGrant@sba.gov.*

If you use a telecommunications device for the deaf (TDD) or a text telephone (TTY), call the Federal Relay Service (FRS), toll free, at 1–800–877–8339.

SUPPLEMENTARY INFORMATION:

Full Text of Announcement

I. Funding Opportunity Description

Purpose of Program [1]: The Economic Aid to Hard-Hit Small Businesses, Nonprofits and Venues Act signed into law on December 27, 2020 included $15 billion in grants to operators of shuttered venues, which the SBA's Office of Disaster Assistance will administer. On March 11, 2021, the American Rescue Plan Act of 2021 (Pub. L. 117–2, title V, sec. 5005) was enacted; it provides an additional $1,249,500,000 in grants for these entities. Of this total grant funding, at least $2 billion is reserved for applicants with up to 50 *full-time employees.* Grants of up to $10 million will be disbursed to eligible entities in accordance with requirements set forth in 2 CFR part 200, as applicable. This guidance explains the rules associated with the use of federal grant funds.

[1] The terms in the text of this notice that are in italics are defined in the Definitions section.

Background: Under the SVOG Program, an eligible entity that was in operation on January 1, 2019 may qualify for grants equal to the lesser of an amount equal to 45% of its gross earned revenue or $10 million. Eligible entities that began operations after January 1, 2019, may qualify for grants equal to the lesser of the average monthly gross revenue for each full month the entity was in operation during 2019 multiplied by 6 OR $10 million. The maximum award amount is $10 million. No less than $2 billion of the total program is reserved for small employers who meet the eligibility requirements and have not more than 50 *full-time employees.*

The SBA will receive and process awards on a rolling basis to ensure that those entities hardest hit by the COVID–19 pandemic are granted an opportunity to access this much-needed assistance.

Priorities

First Priority: Applicants who lost 90% or more of their revenue between April 2020 and December 2020, due to the COVID–19 pandemic.

Second Priority: Entities that lost 70% or more of their revenue between April 2020 and December 2020, due to the COVID–19 pandemic.

Third Priority: Entities that suffered a 25% or greater revenue loss between any one quarter of 2019 and the corresponding quarter of 2020.

Definitions

Cover Charges means charges to encompass front door entrance fees, food or beverage minimums, or other similar charges required to gain admission to a venue, whether collected via ticket sales, addition to a tab, or direct payment.

Covered Mortgage Obligation means a debt obligation that is an obligation of the borrower, including a related mortgage on real or personal property, and that was entered into before February 15, 2020.

Covered Rent Obligation means rent obligated under a leasing agreement in force before February 15, 2020.

Covered Utility Obligation means electricity, gas, water, transportation, telephone, or internet access expenses for which service began before February 15, 2020.

Covered Worker Protection Expenditures means an operating or a capital expenditure to facilitate the adaptation of the business activities of an entity to comply with requirements established or guidance issued by the Department of Health and Human Services, the Centers for Disease Control, or the Occupational Safety and Health Administration, or any equivalent requirements established or guidance issued by a state or local government, during the period beginning on March 1, 2020 and ending on December 32, 2021.

Eligible Person or Entity is a: *Live venue operator* or promoter, theatrical producer, or live performing arts organization operator, a relevant museum operator, a *motion picture theatre operator,* or a talent representative that meets the relevant facility and category requirements related to its entity type in addition to the following eligibility requirements:

1. The *eligible entity* was fully operational (including in a pre-opening, start-up capacity) as an eligible entity on February 29, 2020, and

2. The *eligible entity* had gross earned revenue during the first, second, third, or fourth quarter in 2020 that demonstrates not less than a 25% reduction from the gross earned revenue of the eligible entity during the same quarter in 2019. Firms not in operation in 2019 may qualify for an SVOG if their gross earned revenues for the second, third, or fourth quarter of 2020 demonstrate a reduction of not less than 25% from their gross earned revenue for the first quarter of 2020.

3. As of the date of the grant under this section—

a. the *live venue operator or promoter, theatrical producer, or live performing arts organization operator* is or intends to resume organizing, promoting, producing, managing, or hosting future live concerts, comedy shows, theatrical productions, or other performing arts events;

b. the *motion picture theatre operator* is open or intends to reopen for the primary purpose of public exhibition of motion pictures;

c. the *relevant museum* operator is open or intends to reopen; or

d. the talent representative is representing or managing artists and entertainers.

4. The venues at which the *live venue operator*s or *promoters, theatrical producers, or live performing arts organization operators* stage events, or at which the artists and entertainers represented or managed by the talent representative perform, have the following characteristics:

a. A defined performance and audience space, and

b. Mixing equipment, a public address system, and a lighting rig.

c. Engage 1 or more individuals to carry out at least 2 of the following roles:

(1) A sound engineer;

(2) A booker;

(3) A promoter;

(4) A stage manager;

(5) Security personnel; or

(6) A box office manager.

d. Most performances and artists are paid fairly and do not play for free or solely for tips, except for fundraisers or similar charitable events.

e. For a venue owned or operated by a nonprofit entity that produces free events, the events are produced and managed primarily by paid employees, not by volunteers.

f. Performances are marketed through listings in printed or electronic publications, on websites, by mass email, or on social media.

5. A motion picture theater or theaters operated by the *motion picture theatre operator* have the following characteristics:

a. At least 1 auditorium that includes a motion picture screen and fixed audience seating.

b. A projection booth or space containing not less than 1 motion picture projector.

c. A paid ticket charge to attend exhibition of motion pictures.

d. Motion picture exhibitions are marketed through showtime listings in printed or electronic publications, on websites, by mass mail, or on social media.

6. The *relevant museum (s)* for which the relevant museum operator is seeking a grant under this section have the following characteristics:

a. Serves as a *relevant museum* as its *principal business activity.*

b. Uses indoor exhibition spaces that are a component of the *principal business activity* and which have been subjected to pandemic-related occupancy restrictions.

c. Uses at least 1 auditorium, theater, or performance or lecture hall with fixed audience seating and *regular programming.*

Fixed Seating means seating that is permanently fixed to the floor or ground, or which is so heavy or cumbersome as to make removing it impractical. Where *fixed seating* is required for an auditorium or similar space, a majority of the seating provided in that space must meet the definition of *fixed seating.*

Full-time employee means—

1. any employee working not fewer than 30 hours per week shall be considered a *full-time employee;* and

2. any employee working not fewer than 10 hours and fewer than 30 hours per week shall be counted as one-half of a *full-time* employee.

Live Venue Operator or Promoter, Theatrical Producer or Live Performing Arts Organization Operator

1. means—

a. an individual or entity—

(1) that, as a *principal business activity,* organizes, promotes, produces, manages, or hosts live concerts, comedy shows, theatrical productions, or other events by performing artists for which—

(a) a *cover charge* through ticketing or front door entrance fee is applied; and

(b) performers are paid in an amount that is based on a percentage of sales, a guarantee (in writing or standard contract), or another mutually-beneficial formal agreement, and (2) for which not less than 70% of the earned revenue of the individual or entity is generated through, to the extent related to a live event cover described in subclause a(1) of this section, *cover charges* or ticket sales, production fees or production reimbursements, nonprofit educational initiatives, or the sale of event beverages, food, or merchandise; or

b. an individual or entity that, as a principal business activity, makes available for purchase by the public an average of not less than 60 days before the date of the event tickets to events—

(1) described in subclause a(1) of this section; and

(2) for which performers are paid in an amount that is based on a percentage of sales, a guarantee (in writing or standard contract), or another mutually beneficial formal agreement; and

2. includes an individual or entity described in subparagraph 1 of this section that- a. operates for profit;

b. is a nonprofit organization;

c. is government-owned; or

d. is a corporation, limited liability company, or partnership or operated as a sole proprietorship.

Majority Owned or Controlled means that at least 51% of the ownership interests in an entity (regardless of its legal structure) are held by a single individual or entity.

Motion Picture Theatre Operator means an individual or entity that—

1. as the *principal business activity* of the individual or entity, owns or operates at least 1 place of public accommodation for the purpose of motion picture exhibition for a fee; and

2. includes an individual or entity described in subparagraph 1 that—

a. operates for profit;

b. is a nonprofit organization;

c. is government-owned; or

d. is a corporation, limited liability company, or partnership or operated as a sole proprietorship.

Principal Business Activity is determined using a firm's primary industry under the SBA size regulations (13 CFR 121.107) to define ''principal business activity.'' To determine a given firm's principal business activity, the SBA will consider the distribution of an entity's receipts, employees and costs of doing business among the different lines of business activity in which its business operations occurred for the most recently completed fiscal year. The SBA may also consider other factors, such as the distribution of patents, contract awards, and assets, as appropriate.

Regular Programming means programming provided on an ongoing and near-continuous basis of an average of at least four times a month.

Relevant Museum means a public or private nonprofit agency or institution organized on a permanent basis for essentially educational or aesthetic purposes, that utilizes a professional staff, owns or utilizes tangible objects, cares for the tangible objects, and exhibits the tangible objects to the public on a regular basis. Such term includes museums that have tangible and digital collections and includes aquariums, arboretums, botanical gardens, art museums, children's museums, general museums, historic houses and sites, history museums, nature centers, natural history and anthropology museums, planetariums, science and technology centers, specialized museums, and zoological parks.

Application Requirements

Applications for SVOG funds must address the following application requirements and the application must include the following supporting documentation—

1. *Certification of Need and Assurance*—All entities shall include an assurance that the entity was fully operational on February 29, 2020 and that the funds will only be used for the allowable purposes established by law. This statement is required by statute and must include the following:

a. If the entity is currently in operation, the entity will remain in operation after receipt of the funds; or

b. If the entity is currently shuttered, the statement shall include the intent to reopen with an estimated date of reopening.

2. 2019 Federal Tax Returns;

3. 2020 Federal Tax Returns—Entities are required to submit 2020 Federal tax returns with their applications. If an entity has not filed 2020 Federal tax returns at the time of application, and if the entity is awarded an SVOG and the due date for the entity's 2020 tax returns has passed, the entity must submit 2020 Federal tax returns after the first disbursement. If an entity's 2020 tax returns are not yet due, the entity must provide 2018 and 2019 taxes at the time of application and 2020 taxes as soon as practicable after filing 2020 taxes.

4. Employee List with Job Titles and Employee Status (Full or Part time);

5. Quarterly Profit and Loss Statements for 2019 and 2020;

6. Articles of Incorporation, Bylaws and DBA Certificate (if applicable);

7. Income Statements for 2019 and 2020;

8. Copy of most recent Audited Financial Statement (2019) or Single Audit (if applicable) or link to website where the report can be located;

9. Tax Exempt Status Letter (applicable only for Non-profit entities);

10. Listing of all Individuals Represented and Venues for which they have contracted to perform (applicable only for Talent Representatives);

11. Examples of Contractual/Consultant Agreements with talent represented, and venues used and evidence of booking (This applies only for Talent Representatives);

12. State or Local COVID Occupancy Restrictions (applicable only for Museum Operators);

13. Floor Plan (and plan of grounds if outdoor space is used for the performance venue). The floor plan must demonstrate the location of the defined performance space. Applicants must provide the floor plan that is used for insurance purposes or local fire inspections. In the case of *motion picture theatre operators,* the floor plan must also identify the projection booth. (This applies only to *Live Venue Operator* or Promoter, Theatrical Producer, or Live Performing Arts Organization Operator (Excluding Freelancers); *Motion Picture Theatre Operators; Relevant Museums*);

14. Evidence of Marketing (applicable only for *Live Venue Operator* or *Promoter, Theatrical Producer, or Live Performing Arts Organization Operator* (Excluding Freelancers); *Motion Picture Theatre Operators; Relevant Museums*) Entities that remain open must provide their most recent marketing materials. Those entities that closed due to the COVID–19 pandemic must provide the most recent marketing materials used prior to closing.

15. Indirect Cost Rate Agreement from Cognizant Agency (if applicable). If the entity does not have a current negotiated indirect cost rate in place, the entity may negotiate a proposed indirect cost rate. If the entity has never had a negotiated cost rate agreement, the 10% de minimis rate may be utilized, in accordance with the procedures set forth in 2 CFR 200.414. If the entity has an indirect cost rate agreement from a cognizant agency, a copy of that

agreement must be included in the application.

Assurances: All applicants must submit assurances through the application process. The assurances include the Standard 424 (b), SBA Form 1711—Certification Regarding Lobbying & Disclosure of Lobbying Activities, SBA Form 1623—Debarment and Suspension, a Drug-free Workplace Agreement, and certifications described in section 324 of division N of the Consolidated Appropriations Act, 2021 (Pub. L. 116–260).

Program Authority: Section 324 of division N of the Consolidated Appropriations Act, 2021 (Pub. L. 116–260).

Applicable Regulations:

1. The Office of Management and Budget Guidelines to Agencies on Governmentwide Debarment and Suspension (Nonprocurement) in 2 CFR part 180, as adopted and amended as regulations of the Agency in 2 CFR part 3485.

2. The Uniform Administrative Requirements, Cost Principles, and Audit Requirements for Federal Awards in 2 CFR part 200, as adopted and amended as regulations of the Agency in 2 CFR part 3474.

II. Award Information

Type of Award: Grants.

Estimated Available Funds: $15,000,000,000. Contingent upon the availability of funds and the quality of applications, the SBA may make supplemental awards in FY 2021.

Estimated Range of Awards: $250,000—$10,000,000.

Estimated Average Size of Awards: $1,000,000.

Maximum Award: No grant shall exceed $10 million and the combined grants of an entity and its subsidiaries may not exceed $10 million. The SBA will grant Initial Phase awards either to:

1. An *eligible entity* that was in operation on January 1, 2019, the lesser of an amount equal to 45% of their 2019 gross earned revenue; or

2. An *eligible entity* that began operation after January 1, 2019, the lesser of the average monthly gross revenue for each full month the entity was in operation during 2019 multiplied by 6; or

3. $10 million.

Estimated Number of Awards: 15,000.

Note: The SBA is not bound by any estimates in this notice.

Limits to Initial Grants to Affiliates: Not more than 5 business entities of an *eligible person or entity* that would be considered affiliates under the affiliation rules of the Administration may receive a grant.

Budget Period: Funding received under this grant may be used for allowable costs incurred during the period beginning on March 1, 2020 and ending on December 31, 2021.

III. Eligibility Information

1. *Eligible Entity:* An *eligible person or entity* is a *live venue operator* or promoter, theatrical producer, or live performing arts organization operator, a *relevant museum* operator, a *motion picture theatre operator,* or a talent representative that meets the criteria included in the definition of an *eligible person or entity.*

2. *Exclusions and Ineligible Entity:* An entity is determined ineligible if it has any of the following characteristics:

a. Is a publicly-traded corporation listed on a stock exchange.

b. Receive more than 10% of gross revenue from Federal funding during 2019, excluding amounts received by the eligible entity under the CARES Act or the Robert T. Stafford Disaster Relief and Emergency Assistance Act (42 U.S.C. 5121 *et seq.*).

c. Is not *majority owned or controlled* by an entity with all of the following characteristics:

(1) Owning or operating eligible entities in more than 1 country;

(2) Owning or operating eligible entities in more than 10 States; and

(3) Employing more than 500 *full-time employees* as of February 29, 2020.

d. Where an eligible entity is owned by a State or a political subdivision of a State, it—

(1) must function as the eligible entity; and

(2) cannot include entities of the State or political subdivision other than the eligible entity.

e. The entity cannot present live performance of a prurient or sexual nature and cannot derive more than 5% of its gross revenue, directly or indirectly, from the sale of products or services or the presentation of any depictions or displays that are of a prurient or sexual nature.

3. *Cost Sharing or Matching:* This grant does not require cost sharing or matching.

4. *Subgrantees:* A grantee under this program may not award subgrants.

IV. Application and Submission Instructions

1. Application Submission Instructions: All applications for this grant will be submitted electronically via SBA's website. Please visit *www.sba.gov/svogrant* for information on how to submit an application.

2. *Intergovernmental Review:* This program is not subject to Executive Order 12372 and the regulations in 34 CFR part 79.

3. *Funding Uses:* Grantees under this program must only use the grant funds for the following—

a. Payroll costs;

b. Payments on any *covered rent obligation;*

c. Any *covered utility payment;*

d. Scheduled payments of interest or principal on any *covered mortgage obligation* (which shall not include any prepayment of principal on a *covered mortgage obligation*);

e. Scheduled payments of interest or principal on any indebtedness or debt instrument (which shall not include any prepayment of principal) incurred in the ordinary course of business that is a liability of the *eligible person or entity* and was incurred prior to February 15, 2020;

f. *Covered worker protection expenditures;*

g. Payments made to independent contractors, as reported on Form–1099 MISC, not to exceed a total of $100,000 in annual compensation for any individual employee of an independent contractor, and

h. Other ordinary and necessary business expenses, including—

(1) Maintenance expenses,

(2) Administrative costs, including fees and licensing costs,

(3) State and local taxes and fees,

(4) Operating leases in effect as of February 15, 2020,

(5) Payments required for insurance on any insurance policy, and

(6) Advertising, production transportation, and capital expenditures related to producing a theatrical or live performing arts production, concert, exhibition, or comedy show, except that a grant under this section may not be used primarily for such expenditures.

4. *Funding Restrictions:* An *eligible person or entity* may not use amounts received under a grant for the following purposes:

(a) To purchase real estate;

(b) For payments of interest or principal on loans originated after February 15, 2020;

(c) To invest or re-lend funds;

(d) For contributions or expenditures to, or on behalf of, any political party, party committee, or candidate for elective office; or

(e) For any other use as may be prohibited by the Administrator.

V. Application Review Information

1. *Review and Selection Process:* The SBA will review complete applications in the order in which it receives them based on the established priorities and the availability of funds. The SBA may

decline incomplete applications or applications failing to provide required documentation.

2. *Risk Assessment and Specific Conditions:* Consistent with 2 CFR 200.205, before awarding grants under this competition, the SBA conducts a review of the risks posed by applicants. Under 2 CFR 3474.10, the Administrator may impose specific conditions and, in appropriate circumstances, high-risk conditions on a grant if the applicant or grantee is not financially stable; has a history of unsatisfactory performance; has a financial or other management system that does not meet the standards in 2 CFR part 200, subpart D; has not fulfilled the conditions of a prior grant; or is otherwise not responsible.

3. *Integrity and Performance System:* If you are selected under this opportunity to receive an award that over the course of the project period may exceed the simplified acquisition threshold (currently $250,000), under 2 CFR 200.205(a)(2), we must make a judgment about your integrity, business ethics, and record of performance under Federal awards, that is, the risk posed by you as an applicant—-before we make an award. In doing so, we must consider any information about you that is in the integrity and performance system (currently referred to as the Federal Awardee Performance and Integrity Information System (FAPIIS)), accessible through the System for Award Management. You may review and comment on any information about yourself that a Federal agency previously entered and that is currently in FAPIIS.

Please note that, if the total value of your currently active grants, cooperative agreements, and procurement contracts from the Federal Government exceeds $10,000,000, the reporting requirements in 2 CFR part 200, appendix XII, require you to report certain integrity information to FAPIIS semiannually. Please review the requirements in 2 CFR part 200, appendix XII, if this grant plus all the other Federal funds you receive exceed $10,000,000.

VI. Award Administration Information

1. *Award Notices:* If your application is successful, we will notify you via electronic correspondence containing a link to access an electronic version of your grant award notification.

If your application is not evaluated or not selected for funding, we will notify you.

2. *Administrative and National Policy Requirements:* If awarded funds under this grant, the recipient must agree to cooperate with all financial monitoring and audit reviews conducted by SBA, its agents, or contractors.

3. *Reporting:*

(a) If you apply for a grant under this competition, you must ensure that you have in place the necessary processes and systems to comply with the reporting requirements in 2 CFR part 170, should you receive funding under the opportunity. This does not apply if you have an exception under 2 CFR 170.110(b).

(b) After using all the funds awarded to you, you must submit a final report, including financial information, as directed by the Administrator.

4. *Documentation*—Additional documentation requirements that are consistent with the eligibility and other requirements under this NOFO, including requiring an eligible person or entity that receives a grant under this funding opportunity to retain records that document compliance with the requirements for grants under this program—

(a) with respect to employment records, for the 4-year period following receipt of the grant; and

(b) with respect to other records, for the 3-year period following receipt of the grant.

VII. Other Information

Accessible Format: Individuals with disabilities can obtain this document and a copy of the application package in an accessible format (*e.g.,* braille, large print, audiotape, or compact disc) by request to the program contact person listed under **FOR FURTHER INFORMATION CONTACT**.

Electronic Access to This Document: The official version of this document is the document published in the **Federal Register**. You may access the official edition of the **Federal Register** and the Code of Federal Regulations at *www.govinfo.gov.* At this site, you can view this document, as well as all other documents of the SBA published in the **Federal Register**, in text or Portable Document Format (PDF). To use PDF, you must have Adobe Acrobat Reader, which is available for free at the site.

You can also access documents of the SBA published in the **Federal Register** by using the article search feature at: *www.federalregister.gov.* Specifically, through the advanced search feature at this site, you can limit your search to documents published by the SBA.

Dated: March 23, 2021.

Barbara E. Carson,

Deputy Associate Administrator, Office of Disaster Assistance.

[FR Doc. 2021–06338 Filed 3–25–21; 8:45 am]

BILLING CODE 8026–03–P

DEPARTMENT OF STATE

[Public Notice: 11387]

Notice of Charter Renewal for the Shipping Advisory Committee

The official designation of this advisory committee is the Shipping Coordinating Committee, hereinafter referred to as ''the Committee.''

The Committee is established under the general authority of the Secretary of State and the Department of State (''the Department'') as set forth in Title 22 of the United States Code, in particular Section 2656 of that Title, and consistent with the Federal Advisory Committee Act, as amended (5 U.S.C. Appendix). The approval of this Charter by the Acting Under Secretary of State for Management constitutes a determination by the Secretary of State that this Committee Charter is in the public interest in connection with the performance of duties of the Department.

In accordance with Public Law 92–463, Section 14, it has been formally determined to be in the public interest to continue the Charter for another two years. The Charter was filed on March 17, 2021.

For further information about the Committee, please contact Jeremy Greenwood, Executive Secretary, Shipping Coordinating Committee, U.S. Department of State, Office of Ocean and Polar Affairs, at *greenwoodjm@state.gov* or by telephone at (202) 647–3946.

Jeremy M. Greenwood,

Executive Secretary, Shipping Coordinating Committee, U.S. Department of State.

[FR Doc. 2021–06224 Filed 3–25–21; 8:45 am]

BILLING CODE 4710–09–P

DEPARTMENT OF TRANSPORTATION

Federal Highway Administration

Notice of Final Federal Agency Actions on Proposed Highway in Idaho

AGENCY: Federal Highway Administration (FHWA), Department of Transportation.

ACTION: Notice of limitation on claims for judicial review of actions by FHWA.

SUMMARY: This notice announces actions taken by the FHWA that are final. The actions relate to a proposed highway project, U.S. 20 at Targhee Pass, specifically the section between its junction with Idaho State Highway 87 and the Montana State line, milepost 402.1 to 406.3 in Fremont County, State

of Idaho. The actions grant licenses, permits, and approvals for the project.

DATES: By this notice, the FHWA is advising the public of final agency actions subject to 23 U.S.C. 139(*l*)(1). A claim seeking judicial review of the Federal agency actions on the highway project will be barred unless the claim is filed on or before August 23, 2021. If the Federal law that authorizes judicial review of a claim provides a time period of less than 150 days for filing such claim, then that shorter time period still applies.

FOR FURTHER INFORMATION CONTACT: For FHWA: Lisa Applebee, ITD Districts 5 and 6, LPA, and TPA liaison, Idaho Division Office, FHWA, 3050 N Lakeharbor Lane, Boise, ID 83703, 208–334–9180 Ext, 112, *lisa.applebee@dot.gov.* For Idaho Transportation Department (ITD): Derek Noyes, Project Manager, ITD District 6, 206 N Yellowstone Hwy., Rigby, ID 83442, 208–745–5683, *derek.noyes@itd.idaho.gov.*

SUPPLEMENTARY INFORMATION: Notice is hereby given that the FHWA has taken final agency actions subject to 23 U.S.C. 139(*l*)(1) by issuing licenses, permits, and approvals for the following highway project in the State of Idaho: Project Key No. 14054 and 19913, U.S. 20 from the Junction of Idaho Highway 87 to the Montana State Line, mileposts 402.1 to 406.3. This project includes full depth reconstruction of the roadway including new drainage and base material, a passing lane in the Eastbound (uphill) direction for the entire length of the project, turning lanes at the Bighorn Hills Estates subdivision, and improvement to the sight distance around curves. The scope of this project also includes the installation of an electronic animal detection and warning system. The purpose of this project is to accommodate increased traffic in this section of roadway, and improve driver safety.

The actions by the Federal agencies, and the laws under which such actions were taken, are described in the Environmental Assessment (EA) for the project, approved on June 3, 2020, in the FHWA Finding of No Significant Impact (FONSI) issued on December 8, 2020, and in other documents in the FHWA project records. The EA, FONSI, and other project records are available by contacting FHWA or the Idaho Transportation Department at the addresses provided above. The FHWA EA and FONSI can be viewed and downloaded from the project website at *www.islandparkus20.com,* or a hard copy can be obtained by contacting ITD.

This notice applies to all Federal agency decisions as of the issuance date of this notice and all laws under which such actions were taken, including but not limited to:

- National Environmental Policy Act: 42 U.S.C. 4321–4335
- Federal-Aid Highway Act (23 U.S.C. 109 and 23 U.S.C. 128)
- Clean Air Act (42 U.S.C. 7401–7671q) (transportation conformity)
- Section 4(f) of the Department of Transportation Act of 1966 (49 U.S.C. 303)
- Endangered Species Act of 1973, as amended: 16 U.S.C.1531–1543 (Pub. L. 93–205) (Pub. L. 94–359) (Pub. L. 95–632) (Pub. L. 96–159) (Pub. L. 97–304)
- Fish and Wildlife Coordination Act (16 U.S.C. 661–667(e))
- Migratory Bird Treaty Act (16 U.S.C. 703–712)
- The National Flood Insurance Act of 1968, as amended, and The Flood Disaster Protection Act of 1973, as amended, 42 U.S.C. 4001 et. seq.
- Bald and Golden Eagle Protection Act (16 U.S.C. 668–668d)
- Section 106 of the National Historic Preservation Act of 1966 (54 U.S.C. 306108)
- Archeological Resources Protection Act of 1977 (16 U.S.C. 470aa–470mm)
- Archeological and Historic Preservation Act (16 U.S.C. 469–469c–2)
- The Native American Grave Protection and Repatriation Act (25 U.S.C. 3001–3013)
- Clean Water Act (33 U.S.C. 1251–1387)
- Intermodal Surface Transportation Efficiency Act of 1991. Wetlands Mitigation Banks: Sec. 1006–1007 (Pub. L. 102–240, 105 STAT 1914
- Land and Water Conservation Fund Act (Section 6(f)) 16 U.S.C. 460 –4 TO –1 (Pub. L. 88–578)
- Safe Drinking Water Act (42 U.S.C. 300)
- Resource Conservation and Recovery Act (RCRA), (42 U.S.C. 6901 *et seq.*)
- Comprehensive Environmental Response, Compensation, and Liability Act of 1980, 42 U.S.C. 9601 *et seq.*
- National Trails System Act: 16 U.S.C. 1241–1249
- Noise Abatement Standards: 23 U.S.C. 109(i) (Pub. L. 91–605) (Pub. L. 93–87)
- Executive Order (E.O.) 11990, Protection of Wetlands
- E.O. 12898, Federal Actions to Address Environmental Justice in Minority Populations and Low Income Populations
- E.O. 11988, Floodplain Management
- E.O. 11593, Protection and Enhancement of Cultural Resources
- E.O. 13007, Indian Sacred Sites
- E.O. 13175, Consultation and Coordination with Indian Tribal Governments
- E.O. 11514, Protection and Enhancement of Environmental Quality
- E.O. 13112, Invasive Species

(Catalog of Federal Domestic Assistance Program Number 20.205, Highway Planning and Construction. The regulations implementing Executive Order 12372 regarding intergovernmental consultation on Federal programs and activities apply to this program.)

Authority: 23 U.S.C. 139(*l*)(1).

Peter J. Hartman,

Division Administrator, Boise, Idaho.

[FR Doc. 2021–06163 Filed 3–25–21; 8:45 am]

BILLING CODE 4910–RY–P

DEPARTMENT OF THE TREASURY

Office of Foreign Assets Control

Notice of OFAC Sanctions Actions

AGENCY: Office of Foreign Assets Control, Treasury.

ACTION: Notice.

SUMMARY: The Department of the Treasury's Office of Foreign Assets Control (OFAC) is publishing the names of one or more persons that have been placed on OFAC's Specially Designated Nationals and Blocked Persons List (the SDN List) based on OFAC's determination that one or more applicable legal criteria were satisfied. Additionally, OFAC is publishing updates to the identifying information of persons currently included in the SDN List. All property and interests in property subject to U.S. jurisdiction of these persons are blocked, and U.S. persons are generally prohibited from engaging in transactions with them.

DATES: See **SUPPLEMENTARY INFORMATION** section for effective date(s).

FOR FURTHER INFORMATION CONTACT: OFAC: Associate Director for Global Targeting, tel.: 202–622–2420; Assistant Director for Sanctions Compliance & Evaluation, tel.: 202–622–2490; Assistant Director for Licensing, tel.: 202–622–2480; or Assistant Director for Regulatory Affairs, tel.: 202–622–4855.

SUPPLEMENTARY INFORMATION:

Electronic Availability

The Specially Designated Nationals and Blocked Persons List and additional information concerning OFAC sanctions programs are available on OFAC's website (*https://www.treasury.gov/ofac*).

Notice of OFAC Actions

A. On March 22, 2021, OFAC determined that the property and interests in property subject to U.S. jurisdiction of the following persons are blocked under the relevant sanctions authority listed below.

Individuals

1. CHEN, Mingguo (Chinese Simplified: 陈明国), Xinjiang, China; DOB Oct 1966; POB Yilong, Sichuan, China; nationality China; Gender Male (individual) [GLOMAG] (Linked To: XINJIANG PUBLIC SECURITY BUREAU).

Designated pursuant to section 1(a)(ii)(C)(1) of Executive Order 13818 of December 20, 2017, "Blocking the Property of Persons Involved in Serious Human Rights Abuse or Corruption," 82 FR 60839, 3 CFR, 2018 Comp., p. 399, (E.O. 13818) for being a foreign person who is or has been a leader or official of, XINJIANG PUBLIC SECURITY BUREAU, an entity that has engaged in, or whose members have engaged in, serious human rights abuse relating to the leader's or official's tenure.

2. WANG, Junzheng (Chinese Simplified: 王君正), Urumqi, Xinjiang, China; DOB May 1963; POB Linyi City, Shandong Province, China; nationality China; Gender Male (individual) [GLOMAG] (Linked To: XINJIANG PRODUCTION AND CONSTRUCTION CORPS).

Designated pursuant to section 1(a)(iii)(B) of E.O. 13818 for being owned or controlled by, or for having acted or purported to act for or on behalf of, directly or indirectly, XINJIANG PRODUCTION AND CONSTRUCTION CORPS, a person whose property and interests in property are blocked pursuant to E.O. 13818.

B. On March 22, 2021, OFAC updated the entries on the SDN List for the following persons, whose property and interests in property subject to U.S. jurisdiction continue to be blocked under the relevant sanctions authority listed below.

Individuals

1. AUNG KYAW ZAW (a.k.a. AUNG KYAW ZAWW), Burma; DOB 20 Aug 1961; Gender Male; Passport DM–000826 issued 22 Nov 2011 (individual) [GLOMAG].

-to-

ZAW, Aung Kyaw (a.k.a. ZAWW, Aung Kyaw), Burma; DOB 20 Aug 1961; Gender Male; Passport DM–000826 issued 22 Nov 2011 (individual) [GLOMAG].

Designated on August 17, 2018 pursuant to section 1(a)(ii)(C)(1) of E.O. 13818 for being or having been a leader or official of Burma's Bureau of Special Operations 3, an entity that has engaged in, or whose members have engaged in, serious human rights abuse relating to the leader's or official's tenure

2. KHIN HLAING, Burma; DOB 02 May 1968; Gender Male (individual) [GLOMAG].

-to-

HLAING, Khin, Burma; DOB 02 May 1968; Gender Male (individual) [GLOMAG].

Designated pursuant to section 1(a)(ii)(C)(1) of E.O. 13818 for being or having been a leader or official of Burma's 99th Light Infantry Division, an entity that has engaged in, or whose members have engaged in, serious human rights abuse relating to the leader's or official's tenure.

3. KHIN MAUNG SOE, Burma; DOB 1972; Gender Male (individual) [GLOMAG].

-to-

SOE, Khin Maung, Burma; DOB 1972; Gender Male (individual) [GLOMAG].

Designated pursuant to section 1(a)(ii)(C)(1) of E.O. 13818 for being or having been a leader or official of Burma's Military Operations Command 15, an entity that has engaged in, or whose members have engaged in, serious human rights abuse relating to the leader's or official's tenure.

4. THURA SAN LWIN, Burma; DOB 17 Mar 1959; POB Yangon, Burma; Gender Male (individual) [GLOMAG].

-to-

LWIN, Thura San, Burma; DOB 17 Mar 1959; POB Yangon, Burma; Gender Male (individual) [GLOMAG].

Designated pursuant to section 1(a)(ii)(C)(1) of E.O. 13818 for being or having been a leader or official of Burma's Border Guard Police, an entity that has engaged in, or whose members have engaged in, serious human rights abuse relating to the leader's or official's tenure.

Also designated pursuant to section 1(a)(ii)(A) of E.O. 13818 for being responsible for or complicit in, or having directly or indirectly engaged in, serious human rights abuse.

Dated: March 22, 2021.

Bradley T. Smith,

Acting Director, Office of Foreign Assets Control.

[FR Doc. 2021–06250 Filed 3–25–21; 8:45 am]

BILLING CODE 4810–AL–P

DEPARTMENT OF VETERANS AFFAIRS

Loan Guaranty: Specially Adapted Housing Assistive Technology Grant Program

AGENCY: Department of Veterans Affairs.

ACTION: Notice.

SUMMARY: The Department of Veterans Affairs (VA) is republishing the agency's announcement of the availability of funds for the Specially Adapted Housing Assistive Technology (SAHAT) Grant Program for fiscal year (FY) 2021. On February 8, 2021, VA published the initial announcement that referenced certain Executive Orders that have been rescinded. VA is republishing the announcement, removing the reference to the rescinded orders, extending the application date and grant cycle, and making a minor grammatical correction. The objective of the grant is to

encourage the development of new assistive technologies for specially adapted housing (SAH). This notice is intended to provide applicants with the information necessary to apply for the SAHAT Grant Program. VA strongly recommends referring to the SAHAT Grant Program regulation in conjunction with this notice. The registration process described in this notice applies only to applicants who will register to submit project applications for FY 2021 SAHAT Grant Program funds.

DATES: Applications for the SAHAT Grant Program must be submitted via *www.Grants.gov* by 11:59 p.m. Eastern Daylight Time on April 30, 2021. Awards made for the SAHAT Grant Program will fund operations for FY 2021. The SAHAT Grant Program application package for funding opportunity VA–SAHAT–21–06 is available through *www.Grants.gov* and is listed as VA-Specially Adapted Housing Assistive Technology Grant Program. Applications may not be sent by mail, email or facsimile. All application materials must be in a format compatible with the *www.Grants.gov* application submission tool. Applications must arrive as a complete package. Materials arriving separately will not be included in the application package for consideration and may result in the application being rejected. Technical assistance with the preparation of an initial SAHAT Grant Program application is available by contacting the program official listed herein.

FOR FURTHER INFORMATION CONTACT: Jason Latona, Chief, Specially Adapted Housing, Loan Guaranty Service, Veterans Benefits Administration, Department of Veterans Affairs, 810 Vermont Avenue NW, Washington, DC 20420, 202–632–8862 (not a toll-free number) or *Jason.Latona@va.gov.*

SUPPLEMENTARY INFORMATION: On February 8, 2021, VA published an announcement of the availability of funds for the SAHAT Grant Program for FY 2021, 86 FR 8678–8682, Feb. 8, 2021. The notice included references to certain rescinded Executive Orders. Therefore, VA is republishing the announcement to amend the section titled ''Notices of Funding Opportunity'' by removing the references to those Executive Orders. To give applicants an opportunity to respond to this amendment, VA is extending the application deadline to April 30, 2021 and is extending the corresponding grant cycle start and close-out dates. VA is making a grammatical correction to the numbering of ''VI. Agency Contact(s),'' ''VII. Other Information,'' and ''VIII. Notices of Funding Opportunity.'' Those sections should be numbered as ''VII. Agency Contact(s),'' ''VIII. Other Information,'' and ''IX. Notices of Funding Opportunity.''

This notice is divided into eight sections. Section I provides a summary of and background information on the SAHAT Grant Program as well as the statutory authority, desired outcomes, funding priorities, definitions and delegation of authority. Section II covers award information, including funding availability and the anticipated start date of the SAHAT Grant Program. Section III provides detailed information on eligibility and the threshold criteria for submitting an application. Section IV provides detailed application and submission information, including how to request an application, application content and submission dates and times. Section V describes the review process, scoring criteria and selection process. Section VI provides award administration information such as award notices and reporting requirements. Section VII lists agency contact information. Section VIII provides additional information related to the SAHAT Grant Program. This notice includes citations from 38 CFR, part 36, and VA Financial Policy, Volume X Grants Management, which applicants and partners are expected to read to increase their knowledge and understanding of the SAHAT Grant Program.

I. Program Description

A. Summary

Pursuant to the Veterans' Benefits Act of 2010 (Pub. L. 111–275 § 203), the Secretary of Veterans Affairs (Secretary), through the Loan Guaranty Service (LGY) of the Veterans Benefits Administration (VBA), is authorized to provide grants of financial assistance to develop new assistive technology. The objective of the SAHAT Grant Program is to encourage the development of new assistive technologies for adapted housing.

B. Background

LGY currently administers the SAH Grant Program. Through this program, LGY provides funds to eligible Veterans and Service members with certain service-connected disabilities to help purchase or construct an adapted home, or modify an existing home, to allow them to live more independently. Please see 38 U.S.C. 2101(a)(2)(B) and (C) and 38 U.S.C. 2101(b)(2) for a list of qualifying service-connected disabilities. Currently, most SAH adaptations involve structural modifications such as ramps; wider hallways and doorways; roll-in showers; and other accessible bathroom features, etc. For more information about the SAH Grant Program, please visit *http://www.benefits.va.gov/homeloans/adaptedhousing.asp.*

VA acknowledges there are many emerging technologies and improvements in building materials that could improve home adaptions or otherwise enhance a Veteran's or Service member's ability to live independently. Therefore, in 38 CFR 36.4412(b)(2), VA has defined ''new assistive technology'' as an advancement the Secretary determines could aid or enhance the ability of an eligible individual, as defined in 38 CFR 36.4401, to live in an adapted home. New assistive technology can include advancements in new-to-market technologies and new variations on existing technologies. Examples of the latter might include modifying an existing software application for use with a smart home device; upgrading an existing shower pan design to support wheelchairs; using existing modular construction methods to improve bathroom accessibility; or using existing proximity technology to develop an advanced application tailored to blind users.

Please Note: SAHAT funding does not support the construction or modification of residential dwellings for accessibility. Veterans and Service members interested in receiving assistance to adapt a home are encouraged to review the following fact sheet: *https://www.prosthetics.va.gov/factsheet/PSAS-FactSheet-Housing-Adaptation-Programs.pdf* to identify Home Adaptation programs offered by VA.

C. Statutory Authority

Public Law 111–275, the Veterans' Benefits Act of 2010 (the Act), was enacted on October 13, 2010. Section 203 of the Act added 38 U.S.C. 2108 to establish the SAHAT Grant Program. The Act authorized VA to provide grants of up to $200,000 per fiscal year, through September 30, 2016, to a ''person or entity'' for the development of specially adapted housing assistive technologies. On October 1, 2020, the Continuing Appropriations Act, 2021 and Other Extensions Act was enacted (Pub. L. 116–159, § 5201). Section 5201 of Public Law 116–159 extended the authority for VA to provide grants in the manner listed above through September 30, 2022 (see 38 U.S.C. 2108 and 38 CFR 36.4412).

D. Desired Outcomes and Funding Priorities

Grantees will be expected to leverage grant funds to develop new assistive technologies for SAH. In 38 CFR 36.4412(f)(2), VA set out the scoring criteria and the maximum points allowed for each criterion. As explained in the preambles to the proposed rules and the final rules, while the scoring framework is set out in the regulation text, each notice will address the scoring priorities for that particular grant cycle (79 FR 53146, 53148, Sept. 8, 2014; 80 FR 55763, 55764, Sept. 17, 2014). For FY 2021, the Secretary has identified the categories of innovation and unmet needs as top priorities. These categories are further described as scoring criteria 1 and 2 in Section V(A) of this notice. Although VA encourages innovation across a wide range of specialties, VA is, in this grant cycle, particularly interested in technologies that could help blinded Veterans optimize their independence (*e.g.,* mobile applications, safety devices, etc.). VA also has particular interest in applications that either demonstrate innovative approaches in the design and building of adaptive living spaces or would lead to new products and techniques that expedite the modification of existing spaces, so as to reduce the impact that adaptive projects can have on a Veteran's quality of life during the construction phase. VA notes that applications addressing these categories of special interest are not guaranteed selection, but they would, on initial review, be categorized as meeting the priorities for this grant cycle.

Additional information regarding how these priorities will be scored and considered in the final selection is contained in Section V(A) of this notice.

E. Definitions

Definitions of terms used in the SAHAT Grant Program are found at 38 CFR 36.4412(b).

F. Delegation of Authority

Pursuant to 38 CFR 36.4412(i), certain VA employees appointed to or lawfully fulfilling specific positions within VBA are delegated authority, within the limitations and conditions prescribed by law, to exercise the powers and functions of the Secretary with respect to the SAHAT Grant Program authorized by 38 U.S.C. 2108.

II. Award Information

A. Funding Availability

Funding will be provided as an assistance agreement in the form of grants. The number of assistance agreements VA will fund as a result of this notice will be based on the quality of the technology grant applications received and the availability of funding. However, the maximum amount of assistance a technology grant applicant may receive in any fiscal year is limited to $200,000.

B. Additional Funding Information

Funding for these projects is not guaranteed and is subject to the availability of funds and the evaluation of technology grant applications based on the criteria in this announcement. In appropriate circumstances, VA reserves the right to partially fund technology grant applications by funding discrete portions or phases of proposed projects that relate to adapted housing. Award of funding through this competition is not a guarantee of future funding. The SAHAT Grant Program is administered annually and does not guarantee subsequent awards. Renewal grants to provide new assistive technology will not be considered under this announcement.

C. Start and Close-Out Date

The anticipated start date for funding grants awarded under this announcement is June 8, 2021. The funding period will not exceed 15 months from the start date and will be followed by a 90-day period for closeout. Grant projects must be closed out by December 8, 2022.

III. Eligibility Information

A. Eligible Applicants

As authorized by 38 U.S.C. 2108, the Secretary may provide a grant to a ''person or entity'' for the development of specially adapted housing assistive technologies.

B. Cost Sharing or Matching

There is no cost sharing, matching or cost participation for the SAHAT Grant Program.

C. Threshold Criteria

All technology grant applicants and applications must meet the threshold criteria set forth following herein. Failure to meet any of the following threshold criteria in the application will result in the automatic disqualification for funding consideration. Ineligible participants will be notified within 30 days of the finding of disqualification for award consideration based on the following threshold criteria:

1. Projects funded under this notice must involve new assistive technologies the Secretary determines could aid or enhance the ability of a Veteran or Service member to live in an adapted home.

2. Projects funded under this notice must not be used for the completion of work which was to have been completed under a prior grant.

3. Applications in which the technology grant applicant is requesting assistance funds in excess of $200,000 will not be reviewed.

4. Applications that do not comply with the application and submission information requirements provided in Section IV of this notice will be rejected.

5. Applications submitted via mail, email or facsimile will not be reviewed.

6. Applications must be received through *www.Grants.gov,* as specified in Section IV of this announcement on or before the application deadline of April 30, 2021. Applications received through *www.Grants.gov* after the application deadline will be considered late and will not be reviewed.

7. Technology grant applicants that have an outstanding obligation that is in arrears to the Federal Government or have an overdue or unsatisfactory response to an audit will be deemed ineligible.

8. Technology grant applicants in default by failing to meet the requirements for any previous Federal assistance will be deemed ineligible.

9. Applications submitted by entities deemed ineligible will not be reviewed.

10. Applications with project dates that extend past September 8, 2022, (this period does not include the 90-day closeout period) will not be reviewed.

All technology grant recipients, including individuals and entities formed as for-profit entities, will be subject to the rules on Uniform Administrative Requirements, Cost Principles, and Audit Requirements for Federal Awards, as found at 2 CFR part 200 (see 2 CFR 200.101(a)). Where the Secretary determines 2 CFR part 200 is not applicable or where the Secretary determines additional requirements are necessary due to the uniqueness of a situation, the Secretary will apply the same standard applicable to exceptions under 2 CFR 200.102.

IV. Application and Submission Information

A. Address To Request Application Package

Technology grant applicants may download the application package from *www.Grants.gov.* Questions regarding the application process may be referred to the program official: Oscar Hines (Program Manager), Specially Adapted Housing Program, *Oscar.Hines@va.gov,* 202–632–8862 (not a toll-free number).

B. Content and Form of Application Submission

The SAHAT Grant Program application package provided at *www.Grants.gov* (Funding Opportunity Number: VA–SAHAT–21–06) contains electronic versions of the required application forms. Additional attachments to satisfy the required application information may be provided; however, letters of support included with the application will not be reviewed. All technology grant applications must consist of the following:

1. Standard Forms (SF) 424, 424A, and 424B. SF–424, SF–424A, and SF–424B require general information about the applicant and proposed project. The project budget should be described in SF–424A. Please do not include leveraged resources in SF–424A.

2. VA Form 26–0967: Certification Regarding Debarment, Suspension, Ineligibility and Voluntary Exclusion.

3. VA Form 26–0967a: Scoring Criteria for SAHAT Grants.

4. Applications: In addition to the forms previously listed herein, each technology grant application must include the following information:

a. A project description, including the goals and objectives of the project, what the project is expected to achieve and how the project will benefit Veterans and Service members;

b. An estimated schedule including the length of time (not to extend past September 8, 2022) needed to accomplish tasks and objectives for the project;

c. A description of what the project proposes to demonstrate and how this new technology will aid or enhance the ability of Veterans and Service members to live in an adapted home. The following link has additional information regarding adapted homes: *http://www.benefits.va.gov/homeloans/adaptedhousing.asp.*; and

d. Each technology grant applicant is responsible for ensuring the application addresses each of the scoring criteria listed in Section V(A) of this notice.

C. Dun and Bradstreet Universal Numbering System (DUNS) and System for Award Management (SAM)

Each technology grant applicant, unless the applicant is an individual or Federal awarding agency that is excepted from these requirements under 2 CFR 25.110(b) or (c), or has an exception approved by VA under 2 CFR 25.110(d), is required to:

1. Be registered in SAM prior to submitting an application;

2. Provide a valid DUNS number in the application; and

3. Continue to maintain an active SAM registration with current information at all times during which the technology grant applicant has an active Federal award or an application under consideration by VA.

VA will not make an award to an applicant until the applicant has complied with all applicable DUNS and SAM requirements. If the applicant has not fully complied with the requirements by the time VA is ready to make an award, VA will determine the applicant is not qualified to receive a Federal award and will use this determination as a basis for making the award to another applicant.

D. Submission Dates and Times

Applications for the SAHAT Grant Program must be submitted via *www.Grants.gov* to be transmitted to VA by 11:59 p.m. Eastern Daylight Time on April 30, 2021. Submissions received after this application deadline will be considered late and will not be reviewed or considered. Submissions via email, mail or fax will not be accepted.

Applications submitted via *www.Grants.gov* must be submitted by an individual registered with *www.Grants.gov* and authorized to sign applications for Federal assistance. For more information and to complete the registration process, visit *www.Grants.gov.* Technology grant applicants are responsible for ensuring the registration process does not hinder timely submission of the application.

It is the responsibility of grant applicants to ensure a complete application is submitted via *www.Grants.gov.* Applicants are encouraged to periodically review the ''Version History Tab'' of the funding opportunity announcement in *www.Grants.gov* to identify if any modifications have been made to the funding announcement and/or opportunity package. Upon initial download of the funding opportunity package, applicants will be asked to provide an email address that will allow *www.Grants.gov* to send the applicant an email message in the event this funding opportunity package is changed and/or republished on *www.Grants.gov* prior to the posted closing date.

E. Confidential Business Information

It is recommended that confidential business information (CBI) not be included in the application. However, if CBI is included in an application, applicants should clearly indicate which portion or portions of their application they are claiming as CBI. See 2 CFR 200.333–200.337 (addressing access to a non-Federal entity's records pertinent to a Federal award).

F. Intergovernmental Review

This section is not applicable to the SAHAT Grant Program.

G. Funding Restrictions

The SAHAT Grant Program does not allow reimbursement of pre-award costs.

V. Application Review Information

Each eligible proposal (based on the Section III threshold eligibility review) will be evaluated according to the criteria established by the Secretary and provided in Section A.

A. Scoring Criteria

The Secretary will score technology grant applications based on the following scoring criteria listed herein. As indicated in Section I of this notice, the Secretary is placing the greatest emphasis on criteria 1 and 2. This emphasis does not establish new scoring criteria but is designed to assist technology grant applicants in understanding how scores will be weighted and ultimately considered in the final selection process. A technology grant application must receive a minimum aggregate score of 70. Instructions for completion of the scoring criteria are listed on VA Form 26–0967a. This form is included in the application package materials on *www.Grants.gov.* The scoring criteria and maximum points are as follows:

1. A description of how the new assistive technology is innovative, to include an explanation of how it involves advancements in new-to-market technologies, new variations on existing technologies or both (up to 50 points);

2. An explanation of how the new assistive technology will meet a specific, unmet need among eligible individuals, to include whether and how the new assistive technology fits within a category of special emphasis for FY 2021, as explained in Section I(D) of this notice (up to 50 points);

3. An explanation of how the new assistive technology is specifically designed to promote the ability of eligible individuals to live more independently (up to 30 points);

4. A description of the new assistive technology's concept, size and scope (up to 30 points);

5. An implementation plan with major milestones for bringing the new assistive technology into production and to the market. Such milestones must be meaningful and achievable

within a specific timeframe (up to 30 points); and

6. An explanation of what uniquely positions the technology grant applicant in the marketplace. This explanation can include a focus on characteristics such as the economic reliability of the technology grant applicant, the technology grant applicant's status as a minority or Veteran-owned business or other characteristics the technology grant applicant wants to include to show how it will help protect the interests of, or further the mission of, VA and the program (up to 20 points).

B. Review and Selection Process

Eligible applications will be evaluated by a review panel comprising five VA employees. The review panel will score applications using the scoring criteria provided in Section V(A) and refer to the selecting official those applications that receive a minimum aggregate score of 70. In determining which applications to approve, the selecting official will consider the review panel score, the priorities described in this Notice of Funding Availability; the governing statute, 38 U.S.C. 2108; and the governing regulation, 38 CFR 36.4412. VA Financial Policy, Volume X Grants Management, Chapter 4 Grants Application and Award Process, section 040202.06, *https://www.va.gov/finance/docs/VA-FinancialPolicyVolumeX Chapter04.pdf.*

VI. Award Administration Information

A. Award Notices

Although subject to change, the SAHAT Grant Program Office expects to announce grant recipients by June 8, 2021. Prior to executing any funding agreement, VA will contact successful applicants, make known the amount of proposed funding, and verify the applicant's desire to receive the funding. Any communication between the SAHAT Grant Program Office and successful applicants prior to the issuance of an award notice is not an authorization to begin project activities. Once VA verifies that the grant applicant is still seeking funding, VA will issue a signed and dated award notice. The award notice will be sent by U.S. mail to the organization listed on the SF–424. All applicants will be notified by letter, sent by U.S. mail to the address listed on the SF–424.

B. Administrative and National Policy Requirements

This section is not applicable to the SAHAT Grant Program.

C. Reporting

VA places great emphasis on the responsibility and accountability of grantees. Grantees must agree to cooperate with any Federal evaluation of the program and provide the following:

1. Quarterly Progress Reports: These reports will be submitted electronically and outline how grant funds were used, describe program progress and describe any barriers and measurable outcomes. The format for quarterly reporting will be provided to grantees upon grant award.

2. Quarterly Financial Reports: These reports will be submitted electronically using the SF–425–Federal Financial Report.

3. Grantee Closeout Report: This final report will be submitted electronically and will detail the assistive technology developed. The Closeout Report must be submitted to the SAHAT Grant Program Office not later than 11:59 p.m. Eastern Daylight Time, December 8, 2022.

VII. Agency Contact(s)

For additional general information about this announcement contact the program official: Oscar Hines (Program Manager), Specially Adapted Housing Program, *Oscar.Hines@va.gov*, 202–632–8862 (not a toll-free number).

Mailed correspondence, which should not include application material, may be sent to: Loan Guaranty Service, VA Central Office, Attn: Oscar Hines (262), 810 Vermont Avenue NW, Washington, DC 20420.

All correspondence with VA concerning this announcement must reference the funding opportunity title and funding opportunity number listed at the top of this solicitation. Once the announcement deadline has passed, VA staff may not discuss this competition with applicants until the application review process has been completed.

VIII. Other Information

Section 2108 authorizes VA to provide grants for the development of new assistive technologies through September 30, 2022. Additional information related to the SAHAT Grant Program administered by LGY is available at *http://www.benefits.va.gov/homeloans/adaptedhousing.asp.*

The SAHAT Grant is not a Veterans' benefit. As such, the decisions of the Secretary are final and not subject to the same appeal rights as decisions related to Veterans' benefits. The Secretary does not have a duty to assist technology grant applicants in obtaining a grant.

Grantees will receive payments electronically through the U.S. Department of Health and Human Services Payment Management System (PMS). All grant recipients must adhere to PMS user policies.

IX. Notices of Funding Opportunity

In accordance with the Office of Management and Budget's guidance located at 2 CFR part 200, all applicable Federal laws, and relevant Executive guidance, the Federal awarding agency will review and consider applications for funding pursuant to this notice of funding opportunity in accordance with the Guidance for Grants and Agreements in Title 2, Code of Federal Regulations.

Signing Authority: Denis McDonough, Secretary of Veterans Affairs, approved this document on March 22, 2021, and authorized the undersigned to sign and submit the document to the Office of the Federal Register for publication electronically as an official document of the Department of Veterans Affairs.

Jeffrey M. Martin,

Assistant Director, Office of Regulation Policy & Management, Office of the Secretary, Department of Veterans Affairs.

[FR Doc. 2021–06311 Filed 3–25–21; 8:45 am]

BILLING CODE 8320–01–P

DEPARTMENT OF VETERANS AFFAIRS

Advisory Committee on Minority Veterans; Notice of Meeting

The Department of Veterans Affairs (VA) gives notice under the Federal Advisory Committee Act, 5 U.S.C. App. 2., that the Advisory Committee on Minority Veterans will conduct a virtual site visit on April 20–April 22, 2021, with the Bay Pines VA Healthcare System, St. Petersburg Regional Benefit Office, and Bay Pines National Cemetery in Tampa/St. Petersburg, Florida via Webex Events. The meeting sessions will begin and end as follows:

Dates	Times	Location
April 20, 2021	11 a.m.–3 p.m.—Eastern Daylight Time (EDT)	See WebEx link and call-in information below.
April 21, 2021	11 a.m.–3 p.m. EDT	See WebEx link and call-in information below.
April 22, 2021	11 a.m.–3 p.m. EDT	See WebEx link and call-in information below.

This meeting sessions are open to the public. To access the meeting, please use the Webex events link and access codes shown below:

https://veteransaffairs.webex.com/veteransaffairs/onstage/g.php?PRID=722998c44b7a890eb0272d75c1107023

April 20, 2021: Access Code: 199 424 8659

April 21, 2021: Access Code: 199 872 5560

April 22, 2021: Access Code: 199 944 8232

Event Password: 1baypines!

Or, to join via phone, call USA Toll Number 1–404–397–1596, enter Access Code.

The purpose of the Committee is to advise the Secretary on the administration of VA benefits and services to minority Veterans; assess the needs of minority Veterans; and evaluate whether VA compensation, medical and rehabilitation services, outreach, and other programs are meeting those needs. The Committee makes recommendations to the Secretary regarding such activities.

On Tuesday, April 20, the Committee will receive briefings from the VISN 8 Network Director, James A. Haley Veterans Hospital and Bay Pines VA Healthcare System. On Wednesday, April 21, the Committee will receive briefings from the St. Petersburg Regional Benefits Office and Bay Pines National Cemetery. On Thursday, April 22, the Committee will conduct a virtual town hall meeting from 11:15 a.m. to 1 p.m., receive Public Comments from 1:45 p.m. to 2 p.m. and conduct the Leadership Exit Briefing.

Individuals who speak are invited to submit a 1–2-page summary of their comments no later than April 9, 2021 for inclusion in the official meeting record. Members of the public may also submit written statements for the Committee's review to Ms. Juanita Mullen, at *Juanita.Mullen@va.gov.* Any member of the public seeking additional information should contact Ms. Mullen or Mr. Dwayne Campbell (202) 461–6191.

Dated: March 23, 2021.

Jelessa M. Burney,

Federal Advisory Committee Management Officer.

[FR Doc. 2021–06327 Filed 3–25–21; 8:45 am]

BILLING CODE

Reader Aids

Federal Register

Vol. 86, No. 57

Friday, March 26, 2021

CUSTOMER SERVICE AND INFORMATION

Federal Register/Code of Federal Regulations	
General Information, indexes and other finding aids	**202–741–6000**
Laws	**741–6000**
Presidential Documents	
Executive orders and proclamations	**741–6000**
The United States Government Manual	**741–6000**
Other Services	
Electronic and on-line services (voice)	**741–6020**
Privacy Act Compilation	**741–6050**

ELECTRONIC RESEARCH

World Wide Web

Full text of the daily Federal Register, CFR and other publications is located at: **www.govinfo.gov.**

Federal Register information and research tools, including Public Inspection List and electronic text are located at: **www.federalregister.gov.**

E-mail

FEDREGTOC (Daily Federal Register Table of Contents Electronic Mailing List) is an open e-mail service that provides subscribers with a digital form of the Federal Register Table of Contents. The digital form of the Federal Register Table of Contents includes HTML and PDF links to the full text of each document.

To join or leave, go to **https://public.govdelivery.com/accounts/USGPOOFR/subscriber/new**, enter your email address, then follow the instructions to join, leave, or manage your subscription.

PENS (Public Law Electronic Notification Service) is an e-mail service that notifies subscribers of recently enacted laws.

To subscribe, go to **http://listserv.gsa.gov/archives/publaws-l.html and select** *Join or leave the list (or change settings);* then follow the instructions.

FEDREGTOC and **PENS** are mailing lists only. We cannot respond to specific inquiries.

Reference questions. Send questions and comments about the Federal Register system to: **fedreg.info@nara.gov**

The Federal Register staff cannot interpret specific documents or regulations.

FEDERAL REGISTER PAGES AND DATE, MARCH

11847–12078 1
12079–12256 2
12257–12514 3
12515–12798 4
12799–13148 5
13149–13442 8
13443–13622 9
13623–13796 10
13797–13970 11
13971–14220 12
14221–14362 15
14363–14524 16
14525–14688 17
14689–14806 18
14807–15068 19
15069–15396 22
15397–15560 23
15561–15776 24
15777–16022 25
16023–16282 26

CFR PARTS AFFECTED DURING MARCH

At the end of each month the Office of the Federal Register publishes separately a List of CFR Sections Affected (LSA), which lists parts and sections affected by documents published since the revision date of each title.

3 CFR

Proclamations:
10149 11847
10150 12515
10151 12517
10152 12519
10153 12523
10154 12525
10155 12527
10156 15559
10157 15775
10158 15777
10159 16023
10160 16025

Executive Orders:
14017 11849
14018 11855
14019 13623
14020 13797
14021 13803

Administrative Orders:
Memorandums:
NSPM-16 of February 7, 2019 (amended by EO 14020) 13797
Notices:
Notice of March 2, 2021 12793
Notice of March 2, 2021 12795
Notice of March 2, 2021 12797
Notice of March 5, 2021 13621

5 CFR

532 ..... 11857, 12799

Proposed Rules:
849 13217

6 CFR

5 15779
Ch. I 13971

Proposed Rules:
5 ..... 15134, 15136, 15138

7 CFR

927 15561
983 12799
1783 14525

Proposed Rules:
205 15800
800 12119
925 16085
984 12837

8 CFR

103 14221
106 14221
208 ..... 15069, 15072
212 14221
213 14221
214 14221
245 14221
248 14221
1208 15069

Proposed Rules:
213a 15140

9 CFR

Proposed Rules:
Ch. I 13221
149 12293
Ch. III 13221
307 12122
350 12122
352 12122
354 12122
362 12122
381 12122
533 12122
590 12122
592 12122

10 CFR

72 15563
431 16027
1061 14807

Proposed Rules:
2 14695
21 14695
26 14695
50 ..... 14695, 16087
51 14695
52 14695
55 14695
72 15624
73 14695
430 15804
1061 16114

12 CFR

3 15076
5 15076
217 15076
228 13805
302 12079
324 15076
627 15081
700 15397
702 15397
708a 15397
708b 15397
725 15568
790 15397
Ch. X 14808
1002 14363

Proposed Rules:
22 14696
208 14696
339 14696
614 14696
700 13494
701 13494
702 13498

703.....13494, 13498
704.....13494
713.....13494
760.....14696
1026.....12839

13 CFR

120.....13149, 15083
121.....15083

14 CFR

1.....13629
11.....13629, 13630
21.....13630
25.....14229, 14231, 14233, 14234, 14237, 14810, 15780, 16037
27.....14526
39.....12086, 12802, 12804, 12807, 12809, 13157, 13159, 13162, 13165, 13443, 13445, 13631, 13633, 13637, 13640, 13805, 13807, 13809, 13811, 13814, 13972, 13975, 13982, 13985, 13987, 13989, 14238, 14241, 14366, 14528, 14531, 15089, 15092, 15572, 15576, 15784, 15788, 15791, 16038, 16041, 16043
43.....13630
47.....13629
48.....13629
71.....11859, 11860, 13168, 13169, 13171, 13172, 13447, 13448, 13642, 13644, 13992, 15401, 15403, 15795
89.....13629
91.....13629
95.....16046
97.....12812, 12815, 12816, 12819, 15579, 15583
107.....13629, 13630
401.....13448
404.....13448
413.....13448
414.....13448
415.....13448
417.....13448
420.....13448
431.....13448
433.....13448
435.....13448
437.....13448
440.....13448
450.....13448
460.....13448
1264.....14244
1271.....14244

Proposed Rules:

25.....14387
39.....12127, 12294, 12550, 12857, 12862, 13222, 13225, 13228, 13229, 13232, 13234, 13237, 13239, 13502, 13505, 13665, 13828, 13830, 13833, 13836, 13838, 13841, 14017, 14020, 14023, 14281, 14283, 14285, 14289, 14290, 14293, 14551, 14554, 15140, 15143, 15146, 15149, 15151, 15431, 15434, 15436, 15439, 15443, 16117, 16121, 16124, 16126, 16130, 16133, 16137
71.....12129, 12865, 12866, 12868, 13242, 13244, 13246, 13247, 13249, 13668, 13670, 14026, 14293, 14295, 14556, 15445, 15447
73.....12552

15 CFR

740.....13173, 14689
742.....13173, 14689
744.....12529, 13173, 13179, 14534
922.....15404

16 CFR

317.....12091

17 CFR

201.....13645
275.....13024
279.....13024

Proposed Rules:

Ch. II.....15810

18 CFR

157.....12257

Proposed Rules:

4.....13506
5.....13506
35.....12132
284.....12132, 12879
806.....16140

19 CFR

Ch. I.....12534, 14812, 14813
4.....14245
12.....13993
122.....14245
123.....14245
145.....14245
149.....14245

20 CFR

655.....13995
656.....13995

Proposed Rules:

501.....14557
641.....14558
655.....14558, 15154
656.....15154
658.....14558
667.....14558
683.....14558
726.....14558
802.....14558

21 CFR

6.....15404
510.....13181, 14815
516.....13181
520.....13181, 14815
522.....13181, 14815
524.....13181, 14815
526.....13181
529.....13181, 14815
556.....13181, 14815
558.....13181, 14815
1308.....11862, 12257

Proposed Rules:

1308.....12296, 14707

22 CFR

126.....14802

Proposed Rules:

22.....16149
213.....11905

24 CFR

28.....14370
30.....14370
87.....14370
180.....14370
3280.....13645
3282.....13645, 14370
3285.....13645

26 CFR

1.....12821, 13191, 13647, 13648, 15448

Proposed Rules:

1.....12886, 13250

29 CFR

780.....12535
788.....12535
795.....12535
4044.....14280

Proposed Rules:

7.....14558
8.....14558
10.....15811
18.....14559
22.....14558
24.....14558
26.....14558
29.....14558
37.....14558
38.....14558
96.....14558
103.....14297
417.....14558
458.....14558
500.....14558
516.....15811, 15817
525.....14558
530.....14558
531.....15811, 15817
578.....15811, 15817
579.....15811, 15817
580.....14558, 15811, 15817
780.....14027
788.....14027
791.....14038
795.....14027
1978.....14558
1979.....14558
1980.....14558
1981.....14558
1982.....14558
1983.....14558
1984.....14558
1985.....14558
1986.....14558
1987.....14558
1988.....14558
2204.....13251

31 CFR

16.....12537
27.....12537
35.....13449
50.....12537
501.....14534
510.....14534
535.....14534
536.....14534
539.....14534
541.....14534
542.....14534
544.....14534
546.....14534
547.....14534
548.....14534
549.....14534
552.....14534
560.....14534
561.....14534
566.....14534
576.....14534
583.....14534
584.....14534
588.....14534
592.....14534
594.....14534
597.....14534
598.....14534

32 CFR

575.....15408

33 CFR

100.....13998, 15408, 15584, 15585
117.....12821, 15410
165.....12539, 12541, 12543, 13649, 13651, 13653, 15094, 15408
401.....15411
402.....15585

Proposed Rules:

96.....11913
100.....14714, 14716
117.....16153
165.....12887, 14389, 15625

34 CFR

Proposed Rules:

Ch. II.....15829
Ch. III.....12136, 14048, 14374, 15830
361.....13511

37 CFR

210.....12822

Proposed Rules:

Ch. III.....16156

38 CFR

3.....15413
17.....16050

Proposed Rules:

9.....15448
17.....15628
38.....16165

39 CFR

230.....14539
3050.....15449

40 CFR

9.....15096
49.....12260
52.....11867, 11870, 11872, 11873, 11875, 11878, 12092, 12095, 12107, 12263, 12265, 12270, 12827, 13191, 13655, 13658, 13816, 13819, 14000, 14007, 14541, 14827, 15101, 15104, 15414, 15418
60.....15421
62.....12109, 13459
63.....13819
81.....12107, 14832, 16055
82.....15587
131.....14834
141.....12272, 14003
147.....14846
180.....12829, 13196, 13459
261.....16075
271.....12834

281 15596
282 ....12110, 15596
721 15096
Proposed Rules:
49 14392
52 ....11913, 11915, 12143, 12305, 12310, 12554, 12889, 13254, 13256, 13260, 13264, 13511, 13514, 13671, 13679, 13843, 14055, 14061, 14297, 14299, 14392, 14396, 14856, 15634, 15837, 15838, 15840, 15844, 16171
62 ....11916, 16173, 16176
81 12892
141 ....13846, 14063
147 14858
158 15362
174 15162
180 15162
257 14066
271 12895
281 15686
282 ....12145, 15686
414 14560
751 14398

41 CFR

Proposed Rules:
60–30 14558

42 CFR

1 15404
51c 15423
400 14690
404 15404
405 14542
410 14690
414 14690
415 14690
423 14690
424 14690
425 14690
1000 15404
1001 15132
Proposed Rules:
51c 13872
100 14567

43 CFR

8365 14009

44 CFR

64 ....12117, 14545
Proposed Rules:
206 14067

45 CFR

8 15404
200 15404
300 15404
403 15404
1010 15404
1230 13822
1300 15404
2554 13822
Proposed Rules:
160 13683
164 13683

46 CFR

401 14184
404 14184
Proposed Rules:
71 11913
115 11913
176 11913

47 CFR

0 12545
1 ....12545, 15026, 15796
25 11880
27 13659
73 14851
74 13660
Proposed Rules:
1 ....12146, 12312, 12556, 12898, 15165
2 13266
9 12399
15 13266
25 13266
27 ....12146, 13266
54 ....15165, 15172
63 12312
64 14859
73 ....12161, 12162, 12163, 12556, 12898, 13278, 13516, 13684, 14401, 15180, 15181, 15182, 15451, 15853, 15854, 15855
74 15855
101 13266

48 CFR

Ch. 1 13794
4 13794
52 13794
Proposed Rules:
1 ....14862, 14863
2 14863
3 ....14862, 14863
4 14863
7 14863
9 14863
11 14863
12 ....14862, 14863
13 14863
14 14863
15 14863
16 14863
18 14863
19 14864
25 14863
35 14864
37 14863
42 14863
44 14863
52 ....14862, 14863
53 14863

49 CFR

191 12834
192 ....12834, 12835
209 11888
211 11888
389 11891
Ch. XII 13971
Proposed Rules:
571 13684

50 CFR

11 15427
17 ....11892, 13200, 13465, 15602
300 ....13475, 15428
622 ....14549, 15430
635 ....12291, 12548, 13491, 16075
648 ....13823, 14012, 16077, 16078
660 ....13824, 14379, 14693
679 ....11895, 13215, 13493, 14013, 14014, 14015, 14694, 14851
680 11895
Proposed Rules:
17 ....12563, 15637, 15855
219 15298
223 ....13517, 13518
226 ....13517, 13518
622 ....12163, 12166
648 12591
660 14401

LIST OF PUBLIC LAWS

This is a continuing list of public bills from the current session of Congress which have become Federal laws. This list is also available online at *https://www.archives.gov/federal-register/laws*.

The text of laws is not published in the **Federal Register** but may be ordered in ''slip law'' (individual pamphlet) form from the Superintendent of Documents, U.S. Government Publishing Office, Washington, DC 20402 (phone, 202–512–1808). The text will also be made available at *https://www.govinfo.gov*. Some laws may not yet be available.

H.R. 1276/P.L. 117–4
Strengthening and Amplifying Vaccination Efforts to Locally Immunize All Veterans and Every Spouse Act (Mar. 24, 2021; 135 Stat. 247)

Last List March 24, 2021

Public Laws Electronic Notification Service (PENS)

PENS is a free email notification service of newly enacted public laws. To subscribe, go to *https://listserv.gsa.gov/cgi-bin/wa.exe?SUBED1=PUBLAWS-L&A=1*

Note: This service is strictly for email notification of new laws. The text of laws is not available through this service. **PENS** cannot respond to specific inquiries sent to this address.